Electrolux

Ultimate500™ Pet
Upright Vacuum



Instruction book
Mode d'emploi
Manual de insctrucciones

EHVS55P5AD

IMPORTANT SAFETY INSTRUCTIONS

When using an electrical appliance, basic precautions should always be followed, including the following:
READ ALL INSTRUCTIONS BEFORE USING THIS VACUUM CLEANER.
Failure to follow the warnings and instructions may result in electric shock, fire and/or serious injury

⚠WARNING

To reduce the risk of fire, electric shock, or injury:

When using an electrical appliance, basic precautions should always be followed, including the following:

READ ALL INSTRUCTIONS BEFORE USING (THIS APPLIANCE)

WARNING – To reduce the risk of fire, electric shock, or injury:

a. Do not leave appliance when plugged in. Unplug from outlet when not in use and before servicing.
b. To Reduce The Risk Of Electric Shock – Do not use outdoors or on wet surfaces..
c. Do not allow to be used as a toy. Close attention is necessary when used by or near children.
d. Use only as described in this manual. Use only manufacturer's recommended attachments.
e. Do not use with damaged cord or plug. If appliance is not working as it should, has been dropped, damaged, left outdoors, or dropped into water, return it to a service center.
f. Do not pull or carry by cord, use cord as a handle, close a door on cord, or pull cord around sharp edges or corners. Do not run appliance over cord. Keep cord away from heated surfaces.
g. Do not unplug by pulling on cord. To unplug, grasp the plug, not the cord.
h. Do not handle plug or appliance with wet hands.
i. Do not put any object into openings. Do not use with any opening blocked; keep free of dust, lint, hair, and anything that may reduce air flow.
j. Keep hair, loose clothing, fingers, and all parts of body away from openings and moving parts.
k. Turn off all controls before unplugging.
l. Use extra care when cleaning on stairs.
m. Do not use to pick up flammable or combustible liquids, such as gasoline, or use in areas where they may be present.
n. This appliance is provided with double insulation. Use only identical replacement parts. See instructions for Servicing of Double-Insulated Appliances.
o. Do not pick up anything that is burning or smoking, such as cigarettes, matches, or hot ashes.
p. Do not use without dust bag and/or filters in place.
q. Always turn off this appliance before connecting or disconnecting motorized nozzle.

- To reduce the risk of electric shock, this appliance has a polarized plug (one blade is wider than the other). This plug will fit in a polarized outlet only one way. If the plug does not fit fully in the outlet, reverse the plug. If it still does not fit, contact a qualified electrician to install the proper outlet. Do not change the plug in any way.

⚠Caution:

Follow Manufacturer's instructions. Risk of Fire and Burns.
Do Not Open, Crush, Heat Above 140 °F or Incinerate

SAVE THESE INSTRUCTIONS

Household use only !

Part list / Liste des pièces / Lista de partes:

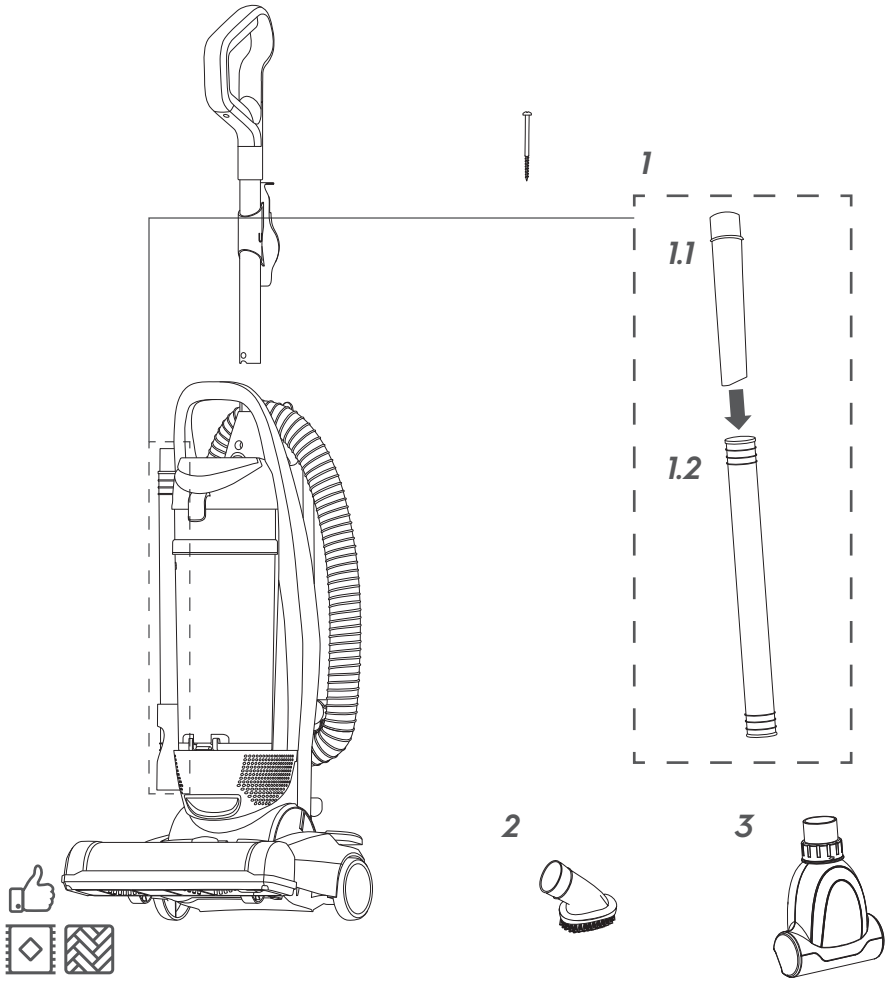

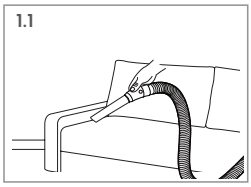

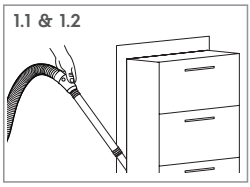

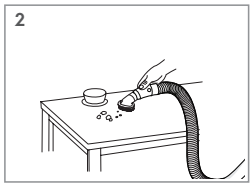

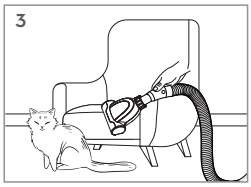

Carpet Hard Floor Hose Suction Adjustment

Product Assembly / Assemblage du produit / Montaje del producto

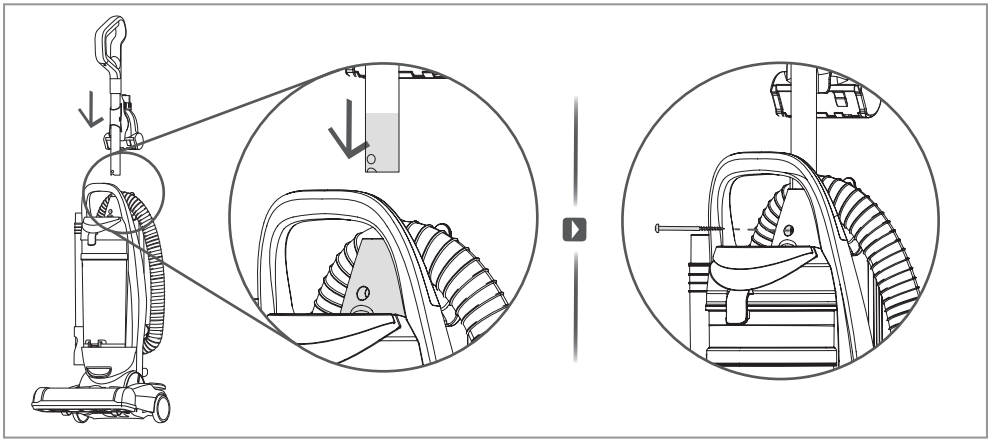

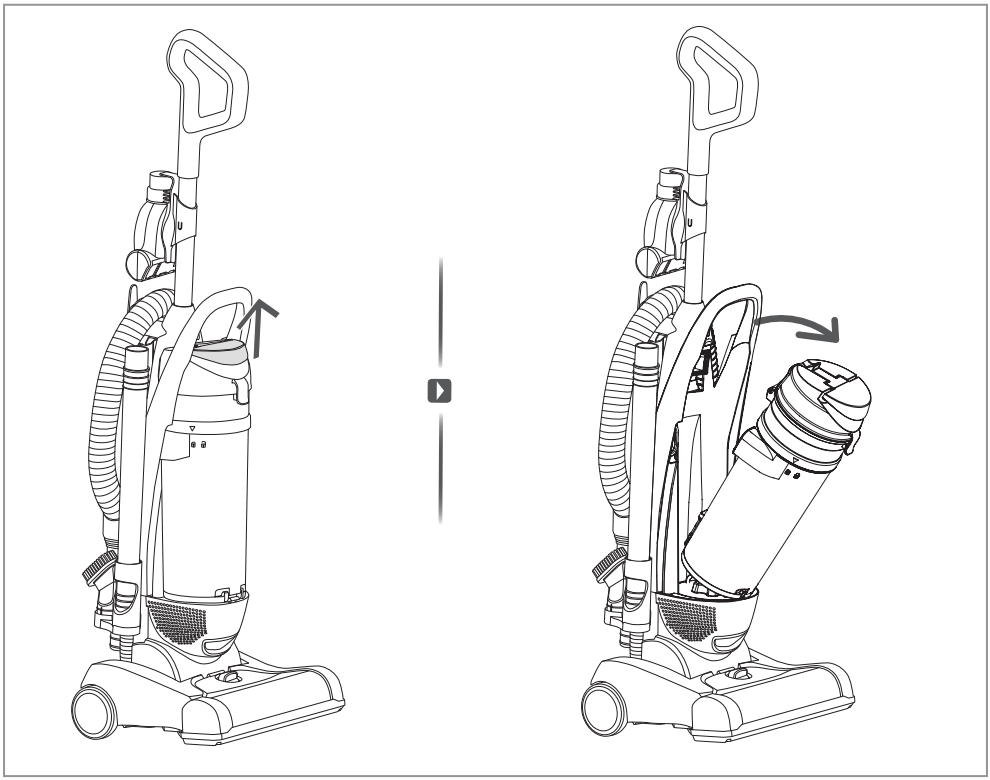

Usage / Utilisation / Uso

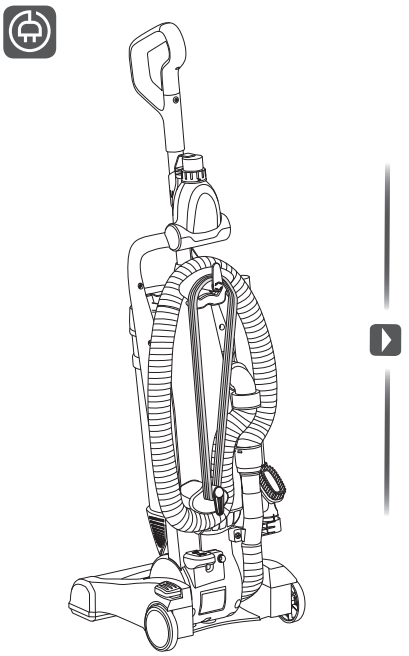

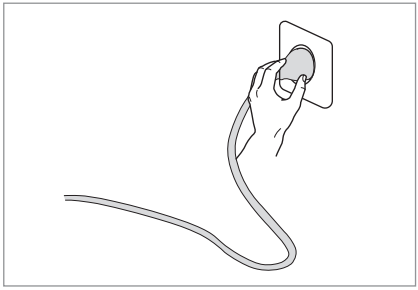

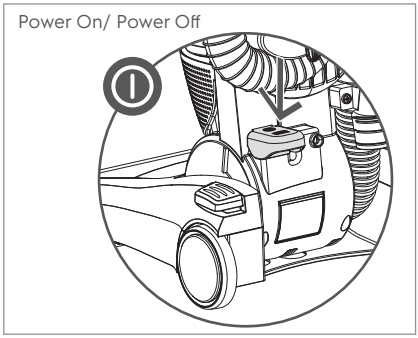

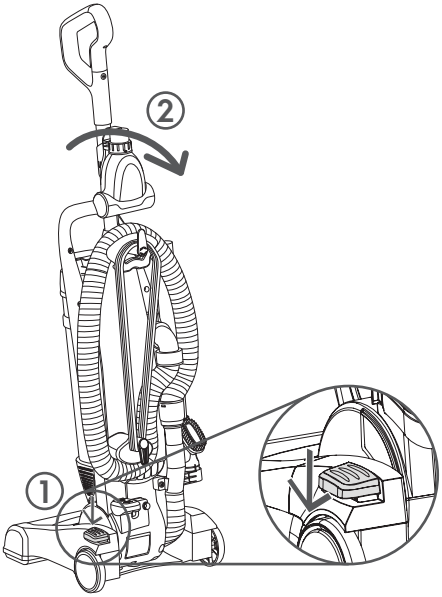

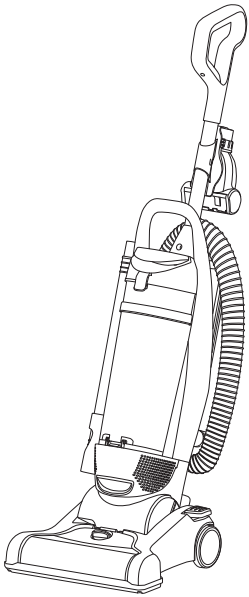

Height Adjustment / Ajustement de la hauteur / Ajuste de altura

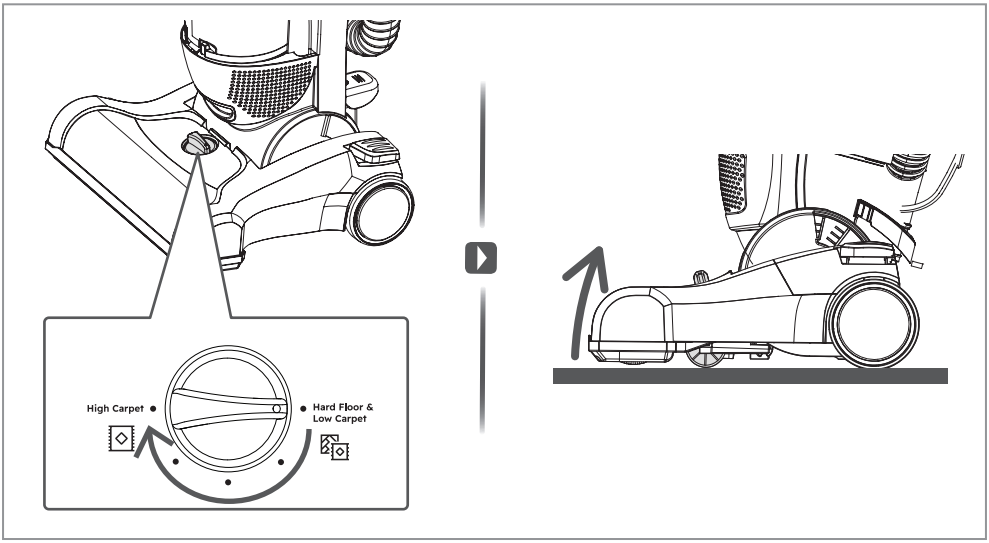

Accessories / Accessoires / Accesorios

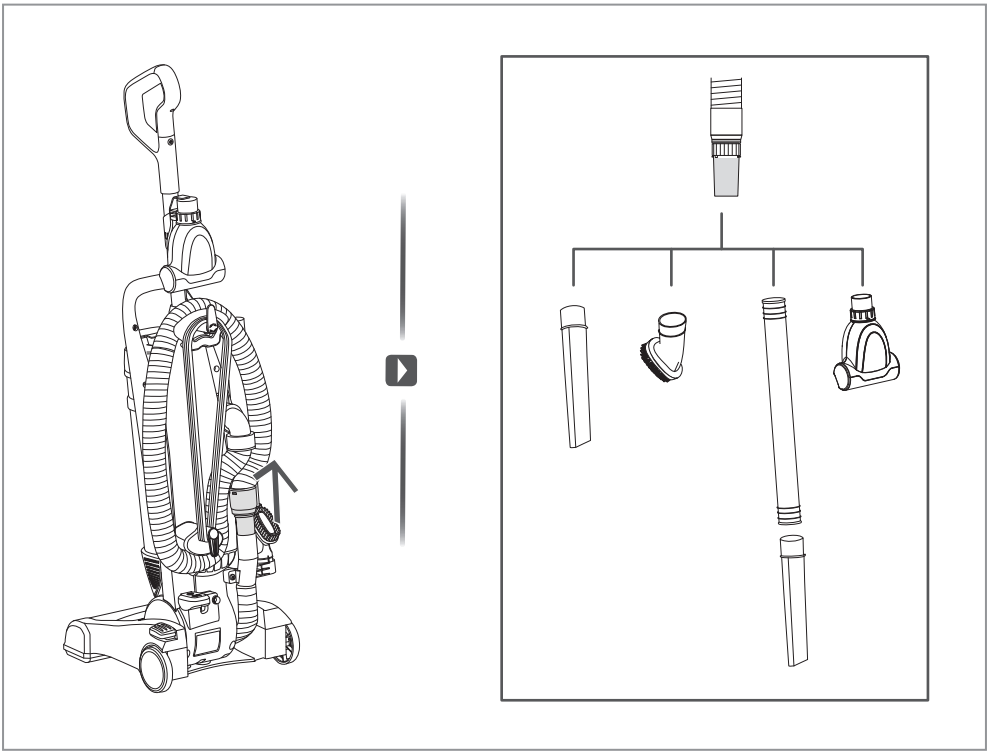

Dust Bin & Filter Maintenance / Entretien du bac à poussière et du filtre / Mantenimiento del depósito de polvo y del filtro

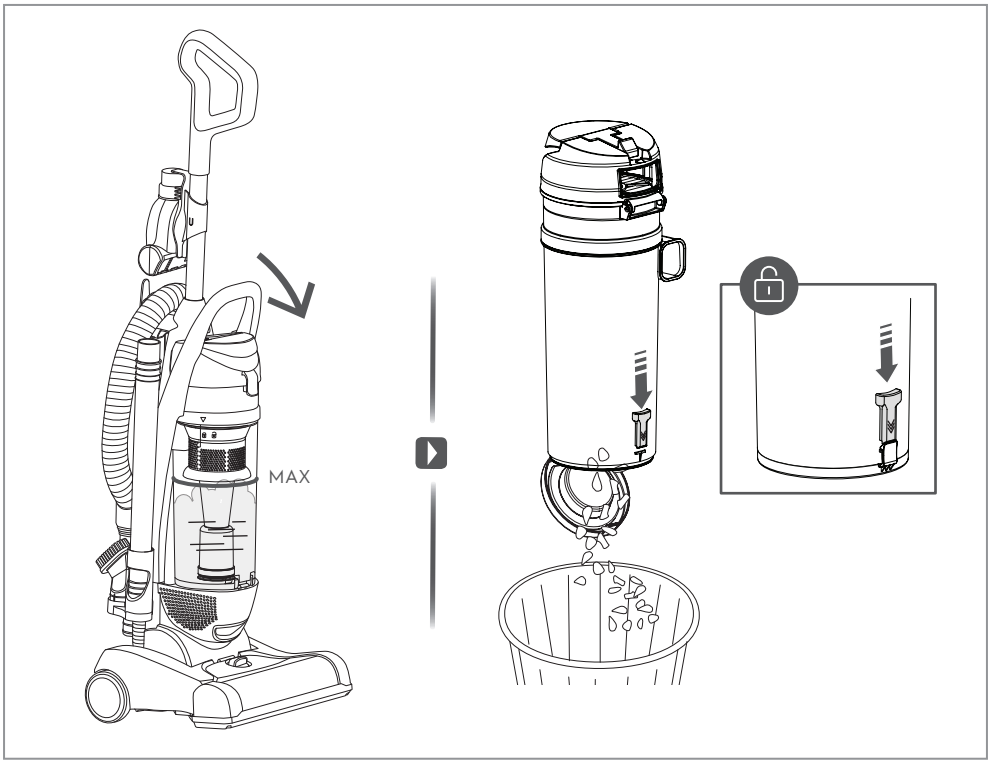

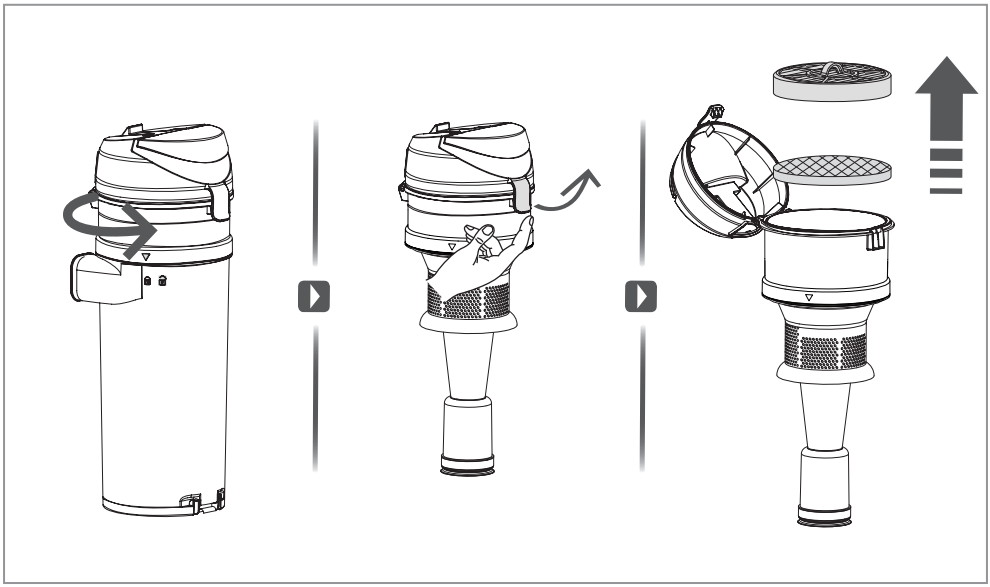

Dust Bin & Filter Maintenance / Entretien du bac à poussière et du filtre / Mantenimiento del depósito de polvo y del filtro

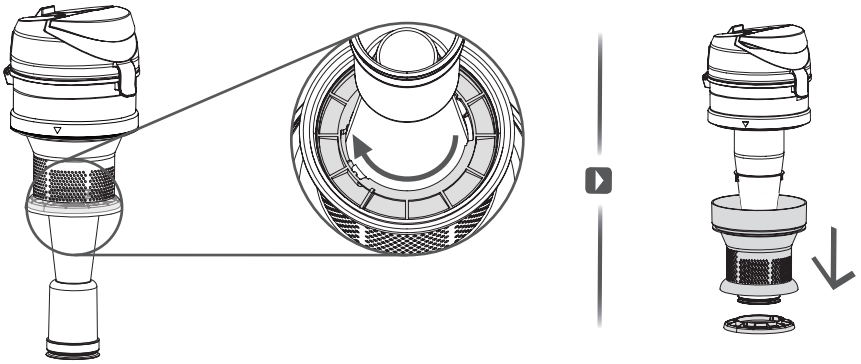

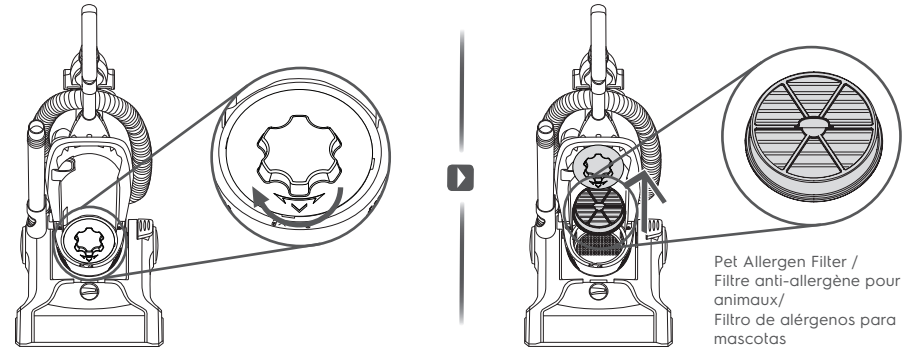

Pet Allergen Filter /
Filtre anti-allergène pour animaux/
Filtro de alérgenos para mascotas

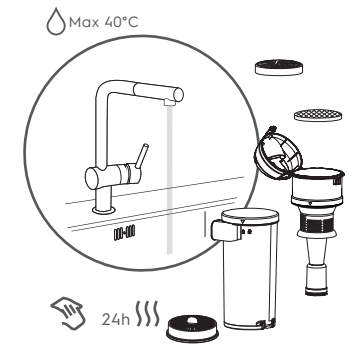

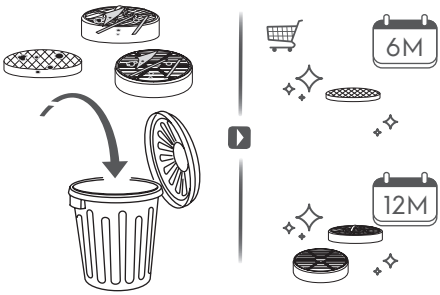

Replace the Sponge Filter / HEPA Filter every 6 / 12 months.
Remplacez le filtre éponge / filtre HEPA tous les 6 / 12 mois.
Reemplace el filtro de esponja / filtro HEPA cada 6 / 12 meses.

Nozzle Maintenance / Entretien du suceur / Mantenimiento de la boquilla

1

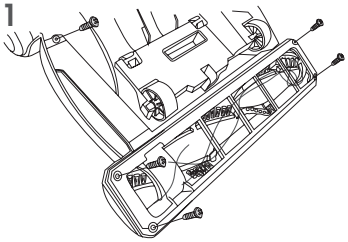

2

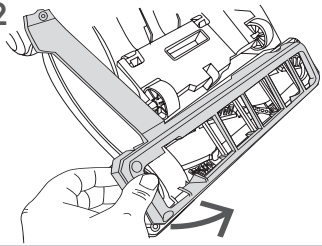

3

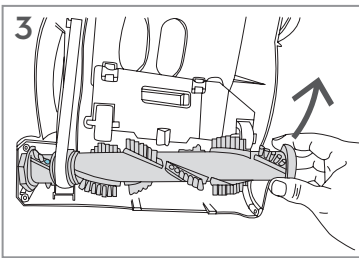

4

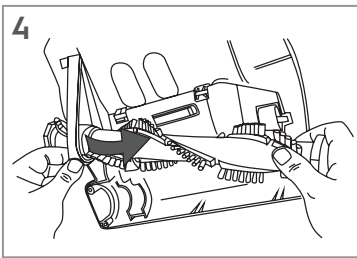

5

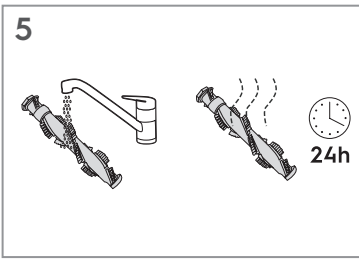

6

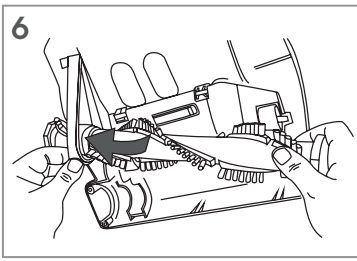

7

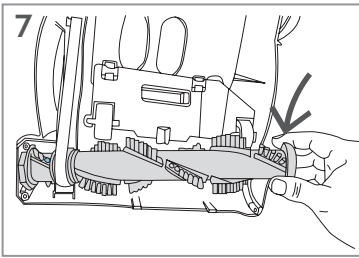

8

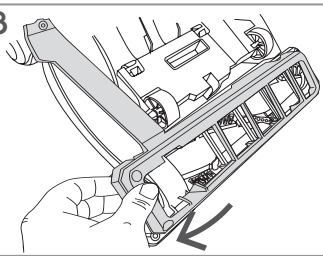

9

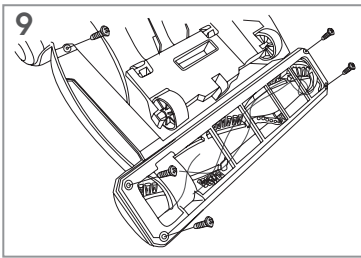

The following uses are not to be performed
Les utilisations suivantes ne doivent pas être effectuées
Las siguientes usos no deben ser realizados

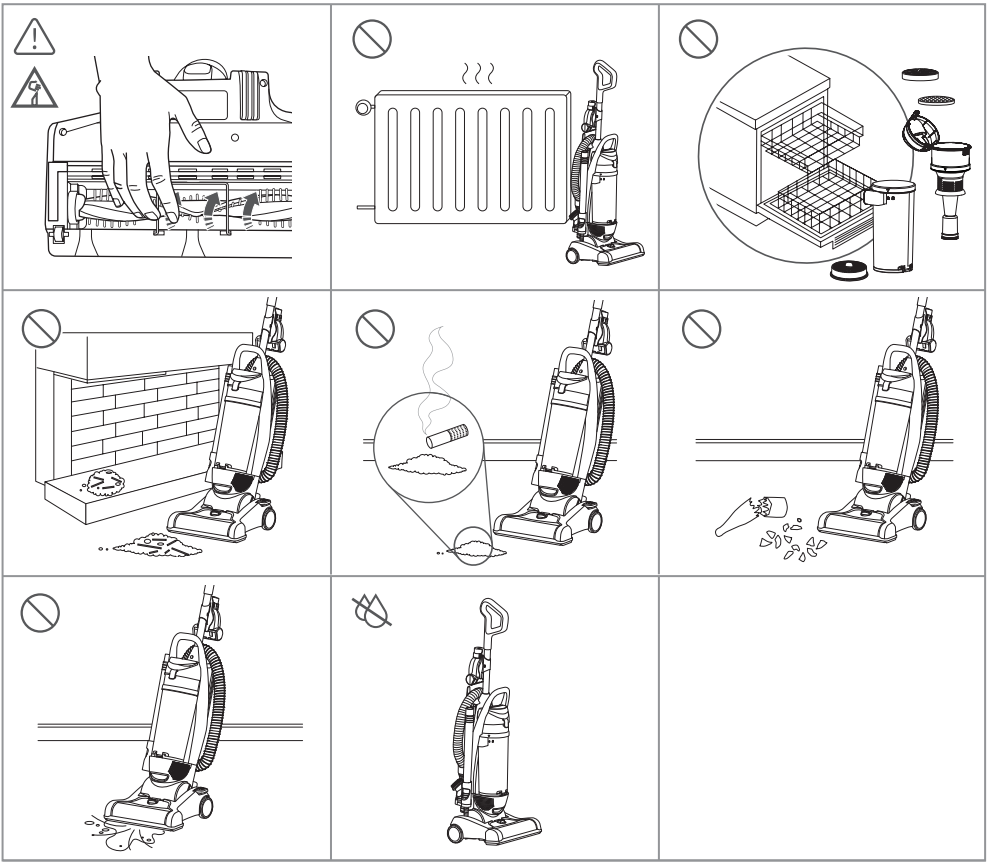

TROUBLESHOOTING

Problem	Checks
Appliance not working	Plug not properly inserted
	Dust cup not properly installed on the unit; Reinstall dust cup and ensure the lock latch clicks into the main unit
VC reduced or no suction force	Clogged HEPA filter or sponge filter affecting suction; Clean or replace HEPA filter and sponge
	Hose not inserted into main unit
	Foreign object blockage in hose
Abnormal motor operation	Dust cup has reached maximum capacity; Empty dust cup before reuse
	Debris entangled at floor brush suction inlet
Floor brush not rotating	Foreign object jamming the brush roller
	Brush roller belt broken; Replace belt
	Brush roller belt dislodged; Reinstall belt
	Brush roller damaged; Replace brush roller
Excessive suction force	When used on high-pile carpets, adjust floor brush height to increase ground clearance
Handle detached from unit	Handle mounting screws not tightened; Reinsert handle into unit and tighten screws

⚠ WARNING

This product contains Lithium-ion rechargable batteries. Do not dispose of Lithium-ion batteries with household waste. Federal and State regulations required proper recycling or disposal of Lithium-ion batteries. Contact your State and Local goverment agencies for recycle and disposal instructions.

Limited Warranty

Your appliance is covered by a two year limited warranty. For two years from your original date of delivery, Electrolux will pay all costs for repairing or replacing any parts of this appliance that prove to be defective in materials or workmanship when such appliance is installed, used and maintained in accordance with the provided instructions.

Exclusions

This warranty does not cover the following:

1. Products with original serial numbers that have been removed, altered or cannot be readily determined.
2. Product that has been transferred from its original owner to another party or removed outside the USA or Canada.
3. Rust on the interior or exterior of the unit.
4. Products purchased "as-is" are not covered by this warranty.
5. Products used in a commercial setting.
6. Service calls which do not involve malfunction or defects in materials or workmanship, or for appliances not in ordinary household use or used other than in accordance with the provided instructions.
7. Service calls to correct the installation of your appliance or to instruct you how to use your appliance.
8. Expenses for making the appliance accessible for servicing, such as removal of trim, cupboards, shelves, etc., which are not a part of the appliance when it is shipped from the factory.
9. Service calls to repair or replace appliance light bulbs, air filters, other consumables, or knobs, handles, or other cosmetic parts.
10. Pickup and delivery costs; your appliance is designed to be repaired in the home.
11. Surcharges including, but not limited to, any after hour, weekend, or holiday service calls, tolls, ferry trip charges, or mileage expense for service calls to remote areas, including the state of Alaska.
12. Damages to the finish of appliance or home incurred during transportation or installation, including but not limited to floors, cabinets, walls, etc.
13. Damages caused by: services performed by unauthorized service companies; use of parts other than genuine Electrolux parts or parts obtained from persons other than authorized service companies; or external causes such as abuse, misuse, inadequate power supply, accidents, fires, or acts of God.

DISCLAIMER OF IMPLIED WARRANTIES; LIMITATION OF REMEDIES

CUSTOMER'S SOLE AND EXCLUSIVE REMEDY UNDER THIS LIMITED WARRANTY SHALL BE REPAIR OR REPLACEMENT AS PROVIDED HEREIN. CLAIMS BASED ON IMPLIED WARRANTIES, INCLUDING WARRANTIES OF MERCHANTABILITY OR FITNESS FOR A PARTICULAR PURPOSE, ARE LIMITED TO ONE YEAR OR THE SHORTEST PERIOD ALLOWED BY LAW, BUT NOT LESS THAN ONE YEAR. ELECTROLUX SHALL NOT BE LIABLE FOR CONSEQUENTIAL OR INCIDENTAL DAMAGES SUCH AS PROPERTY DAMAGE AND INCIDENTAL EXPENSES RESULTING FROM ANY BREACH OF THIS WRITTEN LIMITED WARRANTY OR ANY IMPLIED WARRANTY. SOME STATES AND PROVINCES DO NOT ALLOW THE EXCLUSION OR LIMITATION OF INCIDENTAL OR CONSEQUENTIAL DAMAGES, OR LIMITATIONS ON THE DURATION OF IMPLIED WARRANTIES, SO THESE LIMITATIONS OR EXCLUSIONS MAY NOT APPLY TO YOU. THIS WRITTEN WARRANTY GIVES YOU SPECIFIC LEGAL RIGHTS. YOU MAY ALSO HAVE OTHER RIGHTS THAT VARY FROM STATE TO STATE.

If You Need Service

Keep your receipt, delivery slip, or some other appropriate payment record to establish the warranty period should service be required. If service is performed, it is in your best interest to obtain and keep all receipts. Service under this warranty must be obtained by contacting Electrolux at the addresses or phone numbers below.

This warranty only applies in the USA, Puerto Rico and Canada. In the USA and Puerto Rico, your appliance is warranted by Electrolux Consumer Products, Inc. In Canada, your appliance is warranted by Electrolux Canada Corp. Electrolux authorizes no person to change or add to any obligations under this warranty. Obligations for service and parts under this warranty must be performed by Electrolux or an authorized service company. Product features or specifications as described or illustrated are subject to change without notice.

Web: ***electrolux.com*** (USA) ; ***electrolux.ca*** (Canada) Phone: **(800)-896-9756**

ORDER GENIUNE ACCESSORIES AND REPLACEMENT PARTS
COMMANDE ACCESSOIRES ET PIÈCES DE RECHANGE D'ORIGINE
PEDIDO ACCESORIOS Y REPUESTOS LEGÍTIMOS

electrolux.com (USA)
electrolux.ca (Canada)

(800)-896-9756

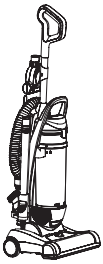

Model index/Index des modèles/Índice de modelos:

EHVS55P5AD

Part No.: **N° de pièce :** **N.° de pieza:**	**Description:** **Description :** **Descripción:**	
ELPAVBU500	Electrolux Style Ultimate500 Belt Package / Ensemble de courroies Electrolux Style / Ultimate500 Paquete de correas Electrolux Style Ultimate500	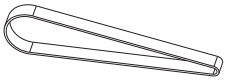
ELPAVAF13	Electrolux Ultimate500 HEPA Filter Kit / Ensemble de filtre HEPA Electrolux Ultimate500 / Kit de filtro HEPA Electrolux Ultimate500	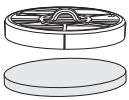
ELPAVAF14	Electrolux Ultimate500 Pet Allergen Filter / Filtre anti-allergène pour animaux Electrolux Ultimate500 / Filtro de alérgenos para Mascotas Electrolux Ultimate500	

Intertek
3071489



USA
(800)-896-9756
Electrolux Consumer Products Inc.
10200 David Taylor Drive
Charlotte, NC 28262

Canada
(800)-896-9756
Electrolux Canada Corp.
5855 Terry Fox Way
Mississauga, Ontario,
Canada L5V 3E4

A29218905