Operator's Manual PAS-2620 Pro Attachment Series™

⚠ WARNING

The engine exhaust from this product contains chemicals known to the State of California to cause cancer, birth defects, or other reproductive harm.

⚠ WARNING



Read and understand all provided literature before use. Failure to do so could result in serious injury.

Note: This product complies with CAN ICES-2/NMB-2.

X7532342400

© 07/26 ECHO Incorporated

TABLE OF CONTENTS

Introduction ... 3
Servicing Information ... 4
- Parts and Serial Number ... 4
- Service ... 4
- ECHO Consumer Product Support ... 4
- Product Registration ... 4
- Additional Literature ... 4

Safety ... 5
- Manual Safety Symbols and Important Information ... 5
- International Symbols ... 6
- Personal Condition and Safety Equipment ... 8
- Equipment ... 13

Emission Control ... 15
- CARB and EPA Emission Control Information ... 15

Description ... 16
Contents ... 17
Assembly ... 18
- Power Head Shaft to Lower Drive Shaft Assembly ... 18
- Support Handle Installation ... 19
- Balance and Adjust Unit ... 19

Operation ... 20
- Fuel ... 21
- Starting Cold Engine ... 24
- Starting Warm Engine ... 25
- Stopping Engine ... 26

Maintenance ... 26
- Skill Levels ... 27
- Maintenance Intervals ... 27
- Air Filter ... 29
- Fuel Filter ... 30
- Spark Plug ... 31
- Cooling System ... 32
- Exhaust System ... 33
- Carburetor Adjustment ... 35
- Upper Drive Shaft Lubrication ... 36

Troubleshooting ... 38
Storage ... 40
- Transportation ... 40
- Short-Term Storage ... 40
- Long-Term Storage (Over 30 Days) ... 40

Specifications ... 42
- ECHO Optional Attachments ... 43

Product Registration ... 44
Notes ... 46

© 07/26 ECHO Incorporated

INTRODUCTION

Specifications, descriptions, and illustrative material in this literature are as accurate as possible. Specifications are subject to change without notice. Illustrations might include optional equipment and accessories, and might not include all standard equipment. Your equipment might appear slightly different than pictured equipment.



Read and understand all provided literature. Literature contains specifications and information for safety, operation, maintenance, storage, and assembly specific to this product. Scan QR codes for more information.



For additional literature, including safety manuals where applicable, or questions regarding terms used in this manual, visit:

https://www.echo-usa.com/technical-documentation

OR

https://www.shindaiwa-usa.com/technical-documentation

© 07/26 ECHO Incorporated

SERVICING INFORMATION

Parts and Serial Number

Genuine ECHO parts and assemblies for your ECHO products are available only from an Authorized Service Dealer. When you do need to buy parts, always have the model number and serial number of the unit with you. Image shows serial number location. For future reference write them in the space provided below.

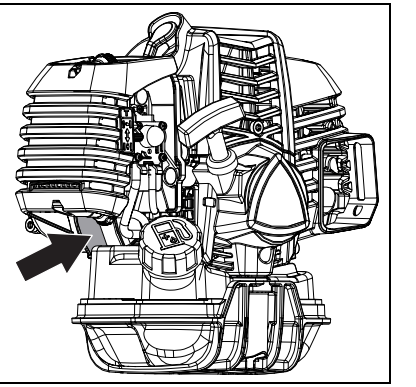

Model No. _____ Serial No. _____

Service

Service of this product during the warranty period must be performed by an Authorized Service Dealer. For the name and address of the Authorized Service Dealer nearest you, ask your retailer or call 1-800-432-ECHO (3246). Authorized Service Dealer information is also available on our website https://www.echo-usa.com. When presenting your unit for warranty service/repairs, proof of purchase is required.

ECHO Consumer Product Support

If you require assistance or have questions concerning the application, operation, or maintenance of this product, call the ECHO Consumer Product Support Department at 1-800-432-ECHO (3246) from 8:00 a.m. to 5:00 p.m. (Central Standard Time) Monday through Friday. Before calling, please know the model and serial number of your unit.

Product Registration

Register your ECHO equipment online at https://www.echo-usa.com or by filling out the product registration sheet included in this manual. Registering your product confirms warranty coverage and provides a direct link to ECHO if we find it necessary to contact you.

Additional Literature

In addition to finding information online, information is available from your Authorized Service Dealer, or by contacting ECHO Incorporated, 400 Oakwood Road, Lake Zurich, IL 60047, 1-800-432-ECHO (3246).

© 07/26 ECHO Incorporated

SAFETY

Manual Safety Symbols and Important Information

Throughout this manual and on the product itself, you will find safety alerts and helpful informational messages preceded by symbols or key words. The following is an explanation of those symbols and key words and what they mean to you.

⚠ DANGER

The safety alert symbol accompanied by the word "DANGER" calls attention to an act or condition which WILL lead to serious personal injury or death if not avoided.

⚠ WARNING

The safety alert symbol accompanied by the word "WARNING" calls attention to an act or condition which COULD lead to serious personal injury or death if not avoided.

⚠ CAUTION

The safety alert symbol accompanied by the word "CAUTION" calls attention to an act or condition which might lead to minor or moderate personal injury if not avoided.

NOTICE

The enclosed message provides information necessary for the protection of the unit.

Note: This enclosed message provides tips for use, care and maintenance of the unit.



CIRCLE AND SLASH SYMBOL
This symbol means the specific action shown is prohibited. Ignoring these prohibitions can result in serious or fatal injury.

© 07/26 ECHO Incorporated

International Symbols

Symbol	Description	Symbol	Description
	Warning, see operator's manual.		Carburetor adjustment (high speed)
	Wear eye, ear and head protection.		Carburetor adjustment (idle speed)
	Wear hand and foot protection.		Carburetor Adjustment (low speed)
	Safety / alert		Stop
	Hot surface	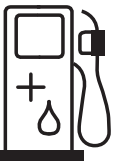	Fuel and oil mixture
	Do not allow flames or sparks near fuel.		Ignition ON / OFF
	Do not smoke near fuel.		Purge bulb
	Choke control RUN position (choke open)		Choke control COLD START position (choke closed)

© 07/26 ECHO Incorporated

Symbol	Description	Symbol	Description
	Keep feet away from blade.		Rotating cutting attachment
	Thrown objects		Wear face shield.
	Finger severing		Wear slip resistant footwear.
	Do not operate closer than 15 m (50 ft.) from electrical hazards. Keep bystanders at least 15 m (50 ft.) away.		Plan a retreat path from falling objects.
	Do not use line head - blades only.		Do not use blades - line head only.
		Avoid kick-out keep bystanders at least 15 m (50 ft.) away.	
		Beware thrown objects. Wear eye protection.	

© 07/26 ECHO Incorporated

Symbol	Description	Symbol	Description
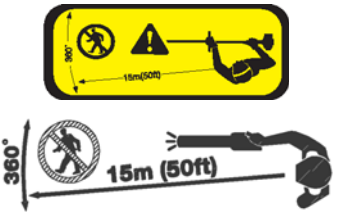		Keep bystanders and helpers away 15 m (50 ft.).	

Note: Not all symbols will appear on your unit.

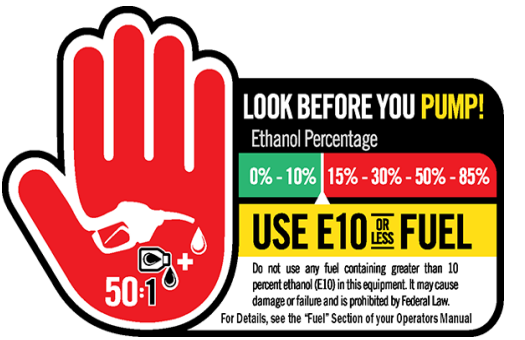

Personal Condition and Safety Equipment

⚠ WARNING

Cancer and Reproductive Harm
https://www.P65Warnings.ca.gov

⚠ WARNING

The muffler or catalytic muffler and surrounding cover may become extremely hot. If unit is equipped with muffler, always keep clear of exhaust and muffler area, otherwise serious personal injury might occur.

© 07/26 ECHO Incorporated

⚠ WARNING

Users of this product risk injury to themselves and others if the unit is used improperly and/or safety precautions are not followed. Proper clothing and safety gear must be worn when operating unit.

Physical Condition

Your judgment and physical dexterity may not be good:

- If you are tired or sick
- If you are taking medication
- If you have taken alcohol or drugs

Operate unit only if you are physically and mentally well.

Eye Protection

⚠ WARNING

- **Eye protection that meets ANSI Z87.1 or CE requirements must be worn whenever you operate the unit.**
- **For additional safety, a full-face shield (not included) can be worn over safety glasses or goggles to provide protection from sharp branches or flying debris.**

Hand Protection

Wear sturdy, no-slip, rubber work gloves to improve your grip on the handles. Gloves also provide protection against cuts and scratches, cold environments, and reduce the transmission of machine vibration to your hands.

Hearing and Ear Protection

ECHO recommends wearing personal protective equipment whenever unit is used.

Breathing Protection

Operators who are sensitive to dust or other common airborne allergens may need to wear a dust mask to prevent inhaling these materials while operating unit. Dust masks can provide protection against dust, plant debris, and other plant matter such as pollen. Make sure the mask does not impair your vision. Replace the mask as needed to prevent air restrictions.

© 07/26 ECHO Incorporated

Proper Clothing

Wear snug-fitting, durable clothing:

- Pants should have long legs, shirts should have long sleeves.
- Do not wear shorts.
- Do not wear ties, scarves, jewelry, or clothing with loose or hanging items that could become entangled in moving parts or surrounding growth.
- Keep clothing buttoned or zipped, and keep shirt tails tucked in.
- Wear sturdy work shoes with nonskid rubber soles.
- Do not wear open toed shoes.
- Do not operate unit with bare feet.
- Keep long hair away from engine and air intake. Retain hair with cap or net.

Heavy protective clothing can increase operator fatigue, which may lead to heat stroke. Schedule heavy work for early morning or late afternoon hours when temperatures are cooler.

⚠ WARNING

The components of this machine generate an electromagnetic field during operation, which can interfere with some pacemakers. To reduce the risk of serious or fatal injury, persons with pacemakers should consult with their physician and the pacemaker manufacturer before operating this machine. In the absence of such information, ECHO does not recommend the use of this machine by anyone who has a pacemaker.

Extended Operation and Extreme Conditions

⚠ CAUTION

Prolonged exposure to cold and/or vibration can result in injury. Read and follow all safety and operation instructions to minimize risk of injury. Failure to follow instructions can result in painful wrist/hand/arm injuries.

It is believed that a condition called Raynaud's Phenomenon, which affects the fingers of certain individuals, may be brought about by exposure to vibration and cold. Exposure to vibration and cold may cause tingling and burning sensations, followed by loss of color and numbness in the fingers. The following precautions are strongly recommended, because the minimum exposure which might trigger the ailment is unknown.

© 07/26 ECHO Incorporated

- Keep your body warm, especially the head, neck, feet, ankles, hands, and wrists.
- Maintain good blood circulation by performing vigorous arm exercises during frequent work breaks, and also by not smoking.
- Limit the hours of operation. Try to fill each day with jobs where operating the unit or other hand-held power equipment is not required.
- If you experience discomfort, redness, and swelling of the fingers followed by whitening and loss of feeling, consult your physician before further exposing yourself to cold and vibration.

Repetitive Stress Injuries (RSI)

It is believed that overusing the muscles and tendons of the fingers, hands, arms, and shoulders may cause soreness, swelling, numbness, weakness, and extreme pain in those areas. Certain repetitive hand activities may put you at a high risk for developing a Repetitive Stress Injury (RSI). An extreme RSI condition is Carpal Tunnel Syndrome (CTS), which could occur when your wrist swells and squeezes a vital nerve that runs through the area. Some believe that prolonged exposure to vibration may contribute to CTS. CTS can cause severe pain for months or even years.

To reduce the risk of RSI/CTS, do the following:

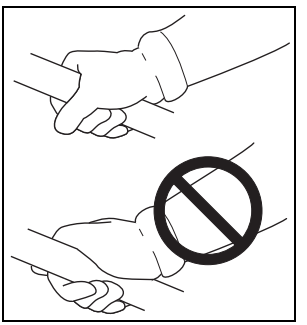

- Avoid using your wrist in a bent, extended, or twisted position. Instead try to maintain a straight wrist position. Also, when grasping, use your whole hand, not just the thumb and index finger.
- Take periodic breaks to minimize repetition and rest your hands.
- Reduce the speed and force with which you do the repetitive movement.
- Do exercises to strengthen the hand and arm muscles.
- Immediately stop using all power equipment and consult a doctor if you feel tingling, numbness, or pain in the fingers, hands, wrists, or arms. The sooner RSI/CTS is diagnosed, the more likely permanent nerve and muscle damage can be prevented.

⚠ DANGER

All overhead electrical conductors and communications wires can have electricity flow with high voltages. This unit is not insulated against electrical current. Never touch wires directly or indirectly, otherwise serious injury or death can result.

© 07/26 ECHO Incorporated

⚠ DANGER

Do not operate gas-powered products indoors or in inadequately ventilated areas. Engine exhaust contains poisonous emissions and can cause serious injury or death.

Read the Manuals

- Provide all users of this equipment with the Operator's Manual for instructions on Safe Operation.

Clear The Work Area

- Always clear the work area of foreign objects such as rocks, broken glass, nails, wire, or string, and check for any hidden hazards. Spectators and fellow workers must be warned, and children and animals prevented from coming nearer than 50 ft. (15 m) while the unit is in use.
- Outside the 15 m (50 ft) zone, there is still a risk of injury from thrown objects.
- Bystanders should be encouraged to wear eye protection.
- If you are approached, stop the engine and cutting attachment.

Keep a Firm Grip

- Always hold throttle handle and support handle with thumbs and fingers tightly encircling the handles.

Keep a Solid Stance

- Maintain footing and balance at all times. Do not stand on slippery, uneven or unstable surfaces. Do not work in odd positions or on ladders. Do not overreach.
- Keep cutting attachment below waist.
- Keep all body parts away from rotating cutting attachment.

Avoid Hot Surfaces

- During operation, the drive shaft housing and attachment bearing housing may become very hot, too hot to touch. Avoid contact during and immediately after operation.



© 07/26 ECHO Incorporated

Equipment

⚠ WARNING

Use only ECHO attachments. Serious injury may result from the use of a non-approved attachment combination. ECHO Incorporated will not be responsible for the failure of cutting devices, attachments or accessories which have not been tested and approved by ECHO. Read and comply with all safety instructions.

- **Do not attempt to modify this product. Serious injury can result from the use of any modified product.**
- **Check unit for loose or missing nuts, bolts, and screws. Tighten or replace as needed.**
- **Inspect shield for damage and ensure that shield is properly installed, and that the cut-off knife is securely in place. Replace if either is damaged or missing.**
- **Check that the cutting attachment is firmly attached and in safe operating condition.**
- **Ensure that manufacturer-recommended flexible non-metallic line is installed in the trimmer head.**
- **Ensure that throttle trigger, throttle trigger lockout, and stop switch all work properly.**
- **Check that handle and harness (if included) are installed and adjusted for safe, comfortable operation. See assembly section for proper adjustment.**

⚠ WARNING

Moving parts can amputate fingers or cause sever injuries. Keep hands, clothing and loose objects away from all openings.

- **Always stop unit, disconnect spark plug or remove battery and make sure all moving parts have come to a complete stop before assembling unit, removing obstructions, cleaning debris, or servicing unit.**
- **Do not connect spark plug lead to spark plug until unit is ready for use.**
- **Do not start or operate unit unless all guards and protective covers are properly assembled.**
- **Never reach into any opening while the unit is running.**

© 07/26 ECHO Incorporated

- **Position wiring safely to prevent snagging, separation of connectors, or breakage during operation. Gather excess wire, and secure with wiring clamp if provided on equipment, or tuck behind the air filter area. Do not place wiring directly against hot engine components.**
- **Check wiring and connectors for nicks, cuts, exposed wire, or other damage, and repair or replace as needed. Exposed wire, or connectors can cause shocks, sparks, and risk of fire or explosion, resulting in serious injury.**
- **Check wire terminals for secure connections.**

⚠ WARNING

Periodically check fuel system (fuel lines, vent, grommet, fuel tank, and fuel cap) for leaks, especially if the unit is dropped. If damage or leaks are found, do not use unit, otherwise serious personal injury or property damage may occur. Have unit repaired by an Authorized Service Dealer before using.

© 07/26 ECHO Incorporated

EMISSION CONTROL

CARB and EPA Emission Control Information



The emission control system for the engine is EM (engine modification) and, if the second to last character of the Engine Family on the Emission Control Information label (sample below) is “B”, “C”, “K”, or “T”, the emission control system is EM and TWC (3-way catalyst). The fuel tank/fuel line emission control system is EVAP (evaporative emissions). Evaporative emissions for California models are only applicable to fuel tanks and fuel feed lines.

An **Emission Control Label** is located on the engine. (This is an EXAMPLE ONLY, information on label varies by engine FAMILY).



Product Emission Durability (Emission Compliance Period)

The 50 or 300 hour emission compliance period is the time span selected by the manufacturer certifying the engine emissions output meets applicable emissions regulations, provided that approved maintenance procedures are followed as listed in the Maintenance Section of this manual.

© 07/26 ECHO Incorporated

DESCRIPTION

Locate the safety decal(s) or etching(s) on your unit. Make sure they are legible, and that you understand and follow the instructions. If any cannot be read, replacements can be ordered from your Authorized Service Dealer Images shown below are for example only. Those on your unit might appear slightly different.

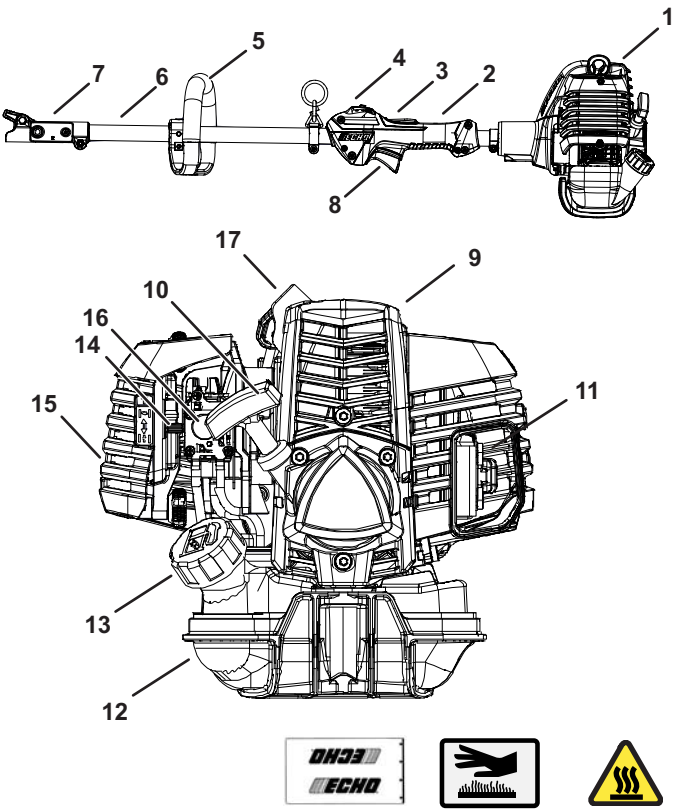

© 07/26 ECHO Incorporated

1. Power head
2. Throttle handle - for right hand
3. Throttle trigger lockout
4. Stop switch
5. Support handle - for left hand
6. Upper drive shaft assembly
7. Drive shaft coupler
8. Throttle trigger
9. Top guard
10. Recoil starter handle
11. Spark arrester muffler or spark arrester muffler with catalyst
12. Fuel tank
13. Fuel tank cap
14. Choke
15. Air filter
16. Purge bulb
17. Spark plug

CONTENTS

The ECHO product you purchased has been factory pre-assembled for your convenience. Due to packaging restrictions, some assembly may be necessary.

After opening the carton, check for damage. Immediately notify your retailer or Authorized Service Dealer of damaged or missing parts. Use the contents list to check for missing parts.

1 Power head with upper drive shaft assembly
1 Quick start guide
1 Warranty statement

© 07/26 ECHO Incorporated

ASSEMBLY

Power Head Shaft to Lower Drive Shaft Assembly

⚠ WARNING

Perform assembly procedures only when the unit is not running. Assembling a running unit can result in serious personal injury.

1. Move STOP switch to OFF position.
2. Allow unit to cool (if required).
3. Remove spark plug lead or remove battery.
4. Set power head/shaft assembly on a level surface.
5. Pull the locater pin (A) out and turn counterclockwise one-quarter turn to lock-out position.
6. Remove the storage hook and cap from the attachment drive shaft, if necessary.

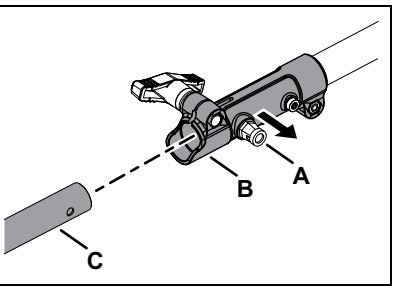

Note: Your coupler may appear different than coupler shown. Earlier model power heads may have shorter couplers.

7. Place attachment drive shaft assembly into coupler (B). Rotate shaft (C) to make sure lower drive shaft engages upper drive shaft socket.

Note: Lower head assembly must be in line with engine.

8. Rotate locater pin (A) one-quarter turn clockwise to engage lower shaft hole. Ensure locater pin is fully engaged by rotating lower drive shaft. Locater pin should snap flush in coupler.

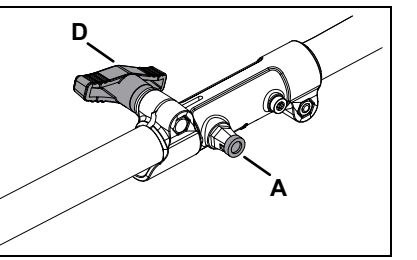

Note: Full engagement of locator pin will prevent shaft rotation.

9. Secure lower shaft assembly to coupler by tightening clamping knob (D).

© 07/26 ECHO Incorporated

Support Handle Installation

Note: Label (A) shows minimum spacing for support handle location.

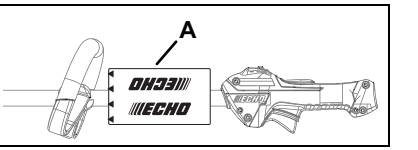

1. If necessary, position support handle for comfortable operation and securely tighten screws.

Balance and Adjust Unit

1. Loosen hanger clamp screw (A).
2. Put on harness.
3. Attach harness clip to hanger.

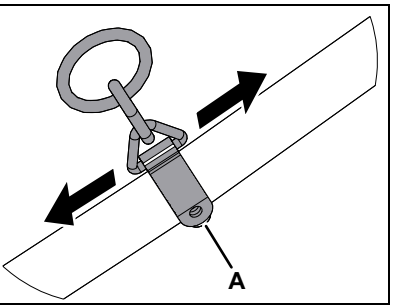

4. Slide hanger assembly forward or backward until unit balances with head or blade 200 mm +/- 100 mm (8.0 in. +/- 4.0 in.) from ground (B).
5. Tighten harness clamp screw.
6. Loosen handle clamp screws, and position handle for comfortable operation.
7. Tighten handle clamp screws.

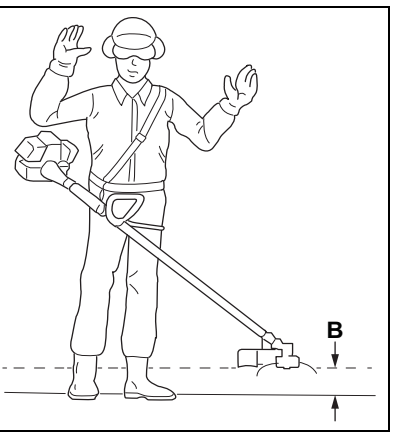

© 07/26 ECHO Incorporated

OPERATION

⚠ WARNING

Moving parts can amputate fingers or cause severe injuries. Keep hands, clothing and loose objects away from all openings. Always stop engine, disconnect spark plug, and make sure all moving parts have come to a complete stop before removing obstructions, clearing debris, or servicing unit.

⚠ WARNING

Engine exhaust is hot, and contains Carbon Monoxide (CO), a poison gas. Breathing CO can cause unconsciousness, serious injury, or death. Exhaust can cause serious burns. Always position unit so that exhaust is directed away from your face and body.

⚠ WARNING

Operation of this equipment may create sparks that can start fires around dry vegetation. This unit is equipped with a spark arrester to prevent discharge of hot particles from the engine. Metal cutters can also create sparks if the cutter strikes rocks, metal, or other hard objects. Contact local fire authorities for laws or regulations regarding fire prevention requirements.

© 07/26 ECHO Incorporated

Fuel

⚠ WARNING

Diesel fuels and alternative fuels, such as E15 (15% ethanol), E85 (85% ethanol) or any fuels not meeting ECHO requirements are not approved for use in ECHO two-stroke or hybrid four-stroke gasoline engines. Use of diesel or alternative fuels may cause performance problems, loss of power, overheating, fuel vapor lock, and unintended machine operation, including, but not limited to, improper clutch engagement. Diesel or alternative fuels may also cause premature deterioration of fuel lines, gaskets, carburetors and other engine components.

Fuel Requirements

Gasoline - Use fresh (purchased within the last 30 days from the pump) 89 octane [R+M/2] (mid grade or higher) gasoline known to be good quality. Gasoline may contain up to 10% Ethanol (grain alcohol) or 15% MTBE (methyl tertiary-butyl ether). Gasoline containing methanol (wood alcohol) is not approved. Use of ECHO branded fuel is recommended to extend engine life in all air-cooled two-stroke and two or four-stroke hybrid engines.

Two-Stroke Oil - A two-stroke engine oil, such as ECHO branded two-stroke oils, meeting ISO-L-EGD (ISO/CD 13738) and J.A.S.O. FD Standards must be used. ECHO branded two-stroke oils meet these standards. Engine problems due to inadequate lubrication caused by failure to use an ISO-L-EGD (ISO/CD 13738) and J.A.S.O. M345-FD certified oil will void the two-stroke engine warranty.

⚠ WARNING

Two-stroke engine oil contains petroleum distillates and other additives that may be harmful if swallowed. Heated oil can release vapors that can cause flash fire, or ignite with explosive force. Read and follow the oil manufacturer's instructions, and observe all safety warnings and precautions for handling flammable liquids. For more detailed safety and first aid information, visit https://www.echo-usa.com for a copy of the Material Safety Data Sheet.

- ***Keep out of reach of children.***
- ***If swallowed, do not induce vomiting. Call physician or a poison control center immediately.***
- ***Wear safety glasses when mixing or handling.***

© 07/26 ECHO Incorporated

- ***Avoid repeated or prolonged skin contact.***
- ***Avoid inhaling oil mists or vapors.***

NOTICE

ECHO branded two-stroke oils may be mixed at 50:1 ratio for application in all ECHO engines sold in the past, regardless of ratio specified in those manuals.

Handling Fuel

⚠ DANGER

Fuel is flammable. Use extreme care when mixing, storing or handling, or serious personal injury may result.

- ***Use an approved fuel container.***
- ***Do not smoke near fuel.***
- ***Do not allow flames or sparks near fuel.***
- ***Fuel tanks/cans may be under pressure. Always loosen fuel caps slowly allowing pressure to equalize.***
- ***Never refuel a unit when the engine is hot or running.***
- ***Do not fill fuel tanks indoors. Always fill fuel tanks outdoors over bare ground.***
- ***Do not overfill fuel tank. Wipe up spills immediately.***
- ***Securely tighten fuel tank cap and close fuel container after refueling.***
- ***Inspect for fuel leakage. If fuel leakage is found, do not start or operate unit until leakage is repaired.***
- ***Use caution when handling fuel. Mix and pour fuel outdoors where there are no sparks and flames. Slowly remove the fuel cap only after stopping the engine and allowing the unit to cool. Do not smoke while fueling or mixing fuel. Move the unit at least 3 m (10 ft.) from the fueling point before starting the engine.***

⚠ DANGER

Gasoline vapor is heavier than air, and can travel along the ground to nearby sources of ignition such as electrical motors, pilot lights, and hot or running engines. Vapors ignited by an ignition source can flash back to the fuel container, resulting in an explosion, fire, serious or fatal injuries, and extensive property damage.

© 07/26 ECHO Incorporated

Mixing Instructions

1. Fill an approved fuel container with half of the required amount of gasoline.
2. Add the proper amount of engine oil to gasoline.
3. Close container and shake to mix oil with gasoline.
4. Add remaining gasoline, close fuel container, and remix.

FUEL TO OIL MIX – 50:1 RATIO			
US		Metric	
Gas	Oil	Gas	Oil
gal.	fl. oz.	L	cc
1	2.6	5	100
2	5.2	10	200
5	13	25	500

NOTICE

Spilled fuel is a leading cause of hydrocarbon emissions. Some states may require the use of automatic fuel shut-off containers to reduce fuel spillage.

After use - Empty the fuel tank prior to storing the unit. Return unused fuel to an approved fuel storage container.

Storage - Fuel storage laws vary by locality. Contact your local government for the laws affecting your area. As a precaution, store fuel in an approved, airtight container. Store in a well-ventilated, unoccupied building, away from sparks and flames.

NOTICE

Stored fuel ages. Do not mix more fuel than you expect to use in thirty days or ninety days when a fuel stabilizer is added.

NOTICE

Stored two-stroke fuel may separate. Always shake fuel container thoroughly before each use.

NOTICE

Used oil and gasoline, and soiled towels are hazardous waste materials. Disposal laws vary by locality.

© 07/26 ECHO Incorporated

Starting Cold Engine

⚠ WARNING

The attachment will operate immediately when the engine starts, and could result in possible serious injury. Keep movable parts of the attachment away from objects that could become entangled or thrown, and surfaces that could cause loss of control.

Note: If a protective blade cover is used, remove it before starting

1. Move stop switch button (A) away from the STOP position.

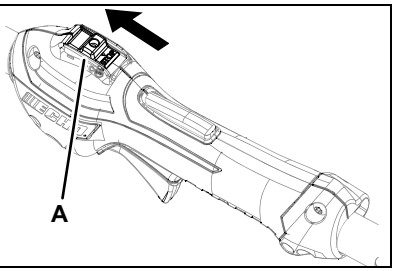

2. Move choke lever (B) to COLD START position.
3. Pump purge bulb (C) until fuel is visible and flows freely in the clear fuel tank return line. Pump bulb an additional five times.

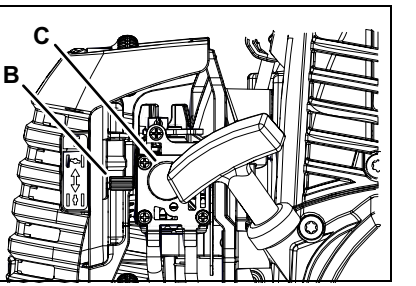

4. Lay the unit on a flat surface and keep movable attachment parts clear of all obstacles. Firmly grasp throttle handle and throttle trigger lockout with left hand and fully depress throttle trigger to wide open position. Rapidly pull recoil starter handle/rope (D) until engine starts (or maximum five pulls).

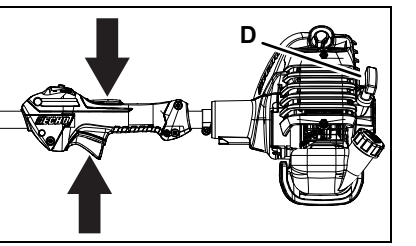

5. After engine starts (or five pulls), move choke to the RUN (open) position. Firmly grasp throttle handle and throttle trigger lockout with left hand and fully depress throttle trigger to wide open position. Release throttle trigger and allow unit to warm up at idle for several minutes.

© 07/26 ECHO Incorporated

Note: If engine does not start with choke in RUN position after five pulls, repeat steps 2 - 5.

6. After engine warm-up, grip throttle handle and support handle. Depress the throttle trigger lockout, and gradually depress throttle trigger to increase engine RPM to operating speed.

Starting Warm Engine

⚠ WARNING

The attachment should not move at idle, otherwise serious personal injury may result.

Note: If attachment moves, readjust carburetor according to Carburetor Adjustment instructions in this manual or see your Authorized Service Dealer.

1. Move stop switch button (A) away from the STOP position.

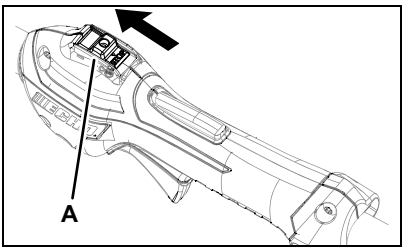

2. . purge bulb (B) until fuel is visible in the clear fuel return line. Pump bulb an additional five times.

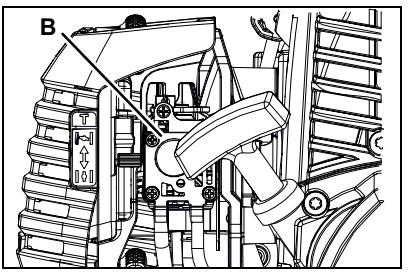

3. Lay the unit on a flat surface and keep movable attachment parts clear of all obstacles. Firmly grip throttle handle and throttle trigger lockout with left hand. Rapidly pull recoil starter handle/rope (D) until engine starts.

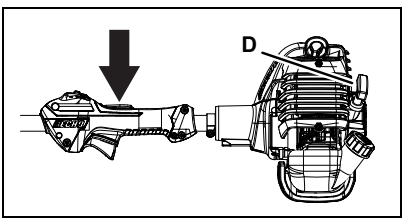

Note: If engine does not start after five pulls, use Starting Cold Engine Procedure.

© 07/26 ECHO Incorporated

Stopping Engine

WARNING

If engine does not stop when stop switch is moved to STOP position, close choke - COLD START position - to stall engine. Have your Authorized Service Dealer repair stop switch before using unit again.

1. Release throttle trigger and allow engine to return to idle before shutting off engine.
2. Move stop switch button (A) to STOP position.

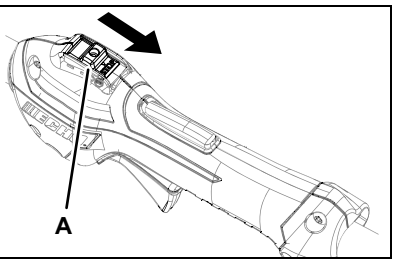

MAINTENANCE

To reduce the risk of injury associated with contacting rotating parts, stop the engine before installing or removing attachments. Do not operate without guards in place. Always disconnect the spark plug before performing maintenance or accessing movable parts.

WARNING

Moving parts can amputate fingers or cause severe injuries. Keep hands, clothing and loose objects away from all openings. Always stop unit, disconnect spark plug or remove battery, and make sure all moving parts have come to a complete stop before removing obstructions, clearing debris, or servicing unit. Allow the unit to cool before performing maintenance or adjustments. Wear gloves to protect hands from sharp edges and hot surfaces.

WARNING

Operating a poorly maintained unit can result in serious injuries to operator or bystanders. Always follow all maintenance instructions as written, otherwise serious personal injury can result.

© 07/26 ECHO Incorporated

Your unit is designed to provide years of trouble-free service. Perform regular scheduled maintenance. If you are unsure about the task, or are not equipped with the necessary tools, we recommend that you take your unit to an Authorized Service Dealer for maintenance. To help you decide whether you want to do it yourself or have the Authorized Service Dealer do it, each maintenance task has been graded. If a task is not listed, see your Authorized Service Dealer for repairs.

NOTICE

The use of emission control components other than those specifically designed for this unit is a violation of federal law.

Skill Levels

Level 1 = Easy to do. Common tools may be required.

Level 2 = Moderate difficulty. Some specialized tools may be required.

Level 3 = See your Authorized Service Dealer.

Click HERE or go to https://www.echo-usa.com/products/maintenance-kit

or

https://www.shindaiwa-usa.com/you-can.aspx

Maintenance Intervals

COMPONENT/SYSTEM	MAINTENANCE PROCEDURE	REQUIRED SKILL LEVEL
Daily or Before Use		
Air Filter	Inspect/Clean *	**1**
Choke Shutter	Inspect/Clean *	**1**
Fuel System	Inspect [3]	**1**
Cooling System	Inspect/Clean	**2**
Recoil Starter Rope	Inspect/Clean *	**1**
Screws/Nuts/Bolts	Inspect/Tighten/Replace *	**1**
Every Refuel		
Fuel System	Inspect [3]	**1**
3 Months		

© 07/26 ECHO Incorporated

COMPONENT/SYSTEM	MAINTENANCE PROCEDURE	REQUIRED SKILL LEVEL
Air Filter	Replace *	**1**
Fuel Filter	Inspect *	**1**
Fuel Cap Gasket	Inspect *	**1**
Spark Plug	Inspect/Clean/Replace *	**1**
Muffler Spark Arrester	Inspect/Clean/Replace *	**2**
Cylinder Exhaust Port	Inspect/Clean/ De-carbon	**2**
Drive Shaft (flex cable models)	Grease [1]	**2**
Gear Housing	Grease [2]	**2**
Yearly		
Fuel Filter	Inspect/Replace *	**1**
Fuel Cap Gasket	Replace *	**1**

Note: Time intervals shown are maximum. Actual use and your experience will determine the frequency of required maintenance.

[1] Apply lithium-based grease every 25 hours of use.

[2] Apply lithium-based grease every 50 hours of use.

[3] Low evaporative fuel tanks do not require regular maintenance to maintain emission integrity.

* Replacement is recommended based on the finding of damage or wear during inspection.

© 07/26 ECHO Incorporated

Air Filter

Level 1

Parts required: Tune-up kit.

1. Move stop switch to STOP position.
2. Allow unit to cool (if required).
3. Remove engine cover.
4. Remove spark plug lead from spark plug.
5. Close choke (COLD START position). This prevents dirt from entering the carburetor throat when the air filter is removed.
6. Brush accumulated dirt from air cleaner area.

NOTICE

Ensure throttle wire retaining clip (A) remains in place when removing or installing air filter cover.

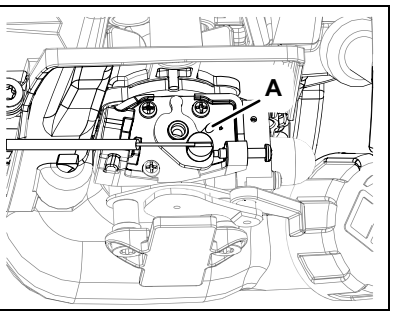

7. Remove air filter cover (B) and clean cover.

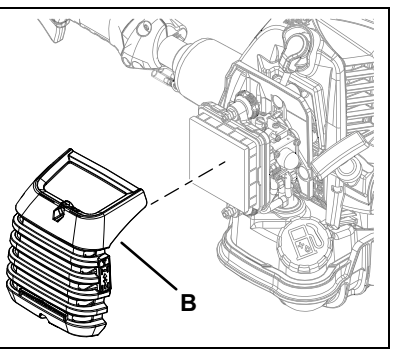

© 07/26 ECHO Incorporated

8. Remove foam filter (C).
9. Remove foam filter cage (D).
10. Clean foam filter (C) in water and detergent solution and rinse with clean water.
11. Wrap foam filter (C) in a clean, dry cloth and squeeze (do not wring) dry. Dry completely before reuse. Do not oil.
12. Remove air filter (E).
13. Brush debris from air filter (E). Replace if damaged, fuel soaked, very dirty, or the rubber sealing edges are deformed or damaged.
14. Install air filter (E).
15. Install foam filter cage (D).
16. Install foam filter (C).
17. Install air filter cover (B).

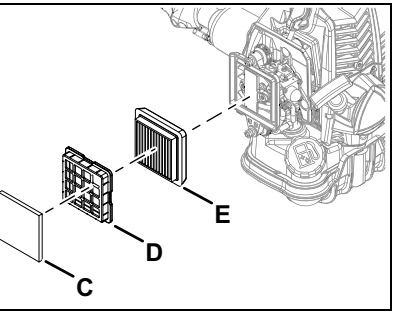

Fuel Filter

Level 1

Parts required: Tune-up kit.

WARNING

Fuel is flammable. Mixing, transporting, or storing fuel, could result in fire. Do not allow flame or spark near fuel. Use care when handling.

1. Move stop switch to STOP position.
2. Allow unit to cool (if required).
3. Remove spark plug lead from spark plug.
4. Use a clean cloth to remove loose dirt from around fuel tank cap.
5. Remove fuel tank cap.
6. Empty fuel into an approved container.

NOTICE

Do not damage fuel line while removing fuel filter from tank.

© 07/26 ECHO Incorporated

7. Remove fuel filter (A) from fuel tank and inspect.
8. Replace if dirty or damaged.
9. Leave wire coil clamp in place. Hold fuel filter with fingers on one hand and pinch fuel line with other hand. Pull and twist slightly to separate.
10. Install new fuel filter with reverse action.
11. Rinse inside of fuel tank with gasoline if dirty.

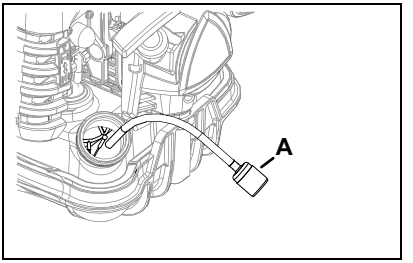

Note: Federal EPA regulations require all model year 2012 and later gasoline powered engines produced for sale in the United States to be equipped with a special low permeation fuel supply hose between the carburetor and fuel tank. When servicing model year 2012 and later equipment, only fuel supply hoses certified by EPA can be used to replace the original equipment supply hose. Fines up to $37,500 may be enforced for using a replacement part that is not certified.

Spark Plug

Level 2

Parts required: Tune-up kit.

NOTICE

Use only NGK CMR7H spark plug. Do not sand blast to clean or severe engine damage can occur.

1. Move stop switch to STOP position.
2. Allow unit to cool (if required).
3. Remove spark plug lead from spark plug.
4. Remove spark plug from cylinder.
5. Place piston at top dead center (TDC).
6. Check spark plug for fouling, worn, or rounded center electrode.
7. Clean park plug or replace with a new one.
8. Set spark plug gap (A) to 0.65 mm (0.026 in.).
9. Tighten spark plug to 102-153 kgf•cm (89-133 lbf•in).

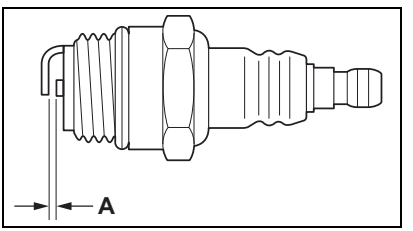

© 07/26 ECHO Incorporated

Cooling System

Level 2

NOTICE

To maintain proper engine operating temperatures, cooling air must pass freely through engine covers and reach cylinder fin area. This flow of air carries combustion heat away from the engine.

Overheating and engine seizure can occur when:

- Engine covers are blocked, preventing cooling air from reaching the cylinder fin area.
- Dust and grass build up on outside of the cylinder and cylinder fin area. This build up insulates the engine and prevents cooling.

Removal of cooling passage blockages or cleaning of outside of cylinder and cylinder fin area is considered normal maintenance. Failure due to lack of maintenance is not covered by warranty.

Cooling System Cleaning

1. Move stop switch to STOP position.
2. Allow unit to cool (if required).
3. Remove spark plug lead from spark plug.
4. Remove muffler cover (A).
5. Remove engine cover (B).

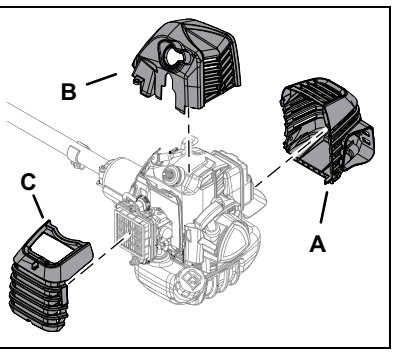

NOTICE

Do not use a metal brush or metal scraper.

6. Use brush with nylon bristles to remove dirt from cylinder fins.
7. Remove air filter cover (C).

© 07/26 ECHO Incorporated

8. Brush debris from grid (D) between recoil starter and fuel tank.
9. Install spark plug lead to spark plug.
10. Assemble air filter cover (C).
11. Assemble engine cover (B).
12. Assemble muffler cover (A).

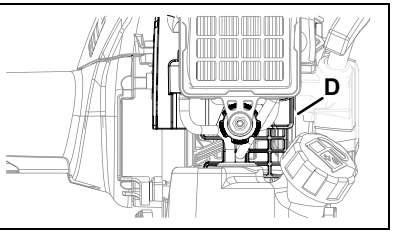

Exhaust System

Level 2

Spark Arrester Screen Cleaning

Parts required: Spark arrester screen, gasket.

1. Move stop switch to STOP position.
2. Allow unit to cool (if required).
3. Remove spark plug lead from spark plug.
4. Remove spark plug from cylinder.
5. Place piston at top dead center.
6. Remove muffler cover (A).
7. Remove spark arrester screen cover (B), gasket (C), and spark arrester screen (D) from muffler body.

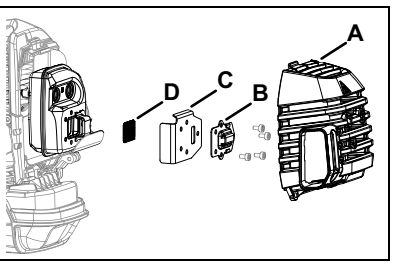

NOTICE

When cleaning carbon deposits, do not damage catalytic element inside muffler.

8. Clean carbon deposits from muffler components.
9. Replace spark arrester screen if it is cracked, plugged, or has holes burned through.
10. Assemble spark arrester screen (D), gasket (C), and spark arrester screen cover (B), to muffler body.
11. Install spark plug to cylinder.
12. Install spark plug lead to spark plug.
13. Assemble muffler cover.

© 07/26 ECHO Incorporated

Exhaust Port Cleaning

Parts required: Heat shield (as needed).

1. Move stop switch to STOP position.
2. Allow unit to cool (if required).
3. Remove spark plug lead from spark plug.
4. Place piston at top dead center.
5. Remove muffler cover.
6. Remove muffler fasteners and muffler (A).
7. Remove heat shield (B).

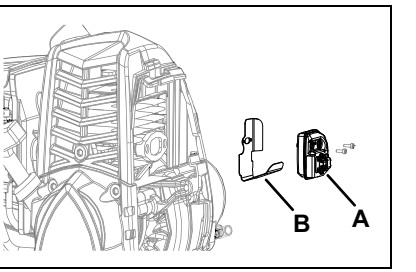

NOTICE

Use a wood or plastic scraping tool to clean deposits from cylinder exhaust port. Do not scratch cylinder or piston when cleaning exhaust port or allow carbon particles to enter cylinder.

8. Clean exhaust port (C).
9. Inspect heat shield (B) and replace if damaged.
10. Assemble heat shield (B).
11. Assemble muffler (A).
12. Tighten muffler fasteners to 90-110 kgf•cm (80-95 lbf•in).
13. Install spark plug to cylinder.
14. Install spark plug lead to spark plug.
15. Assemble muffler cover.

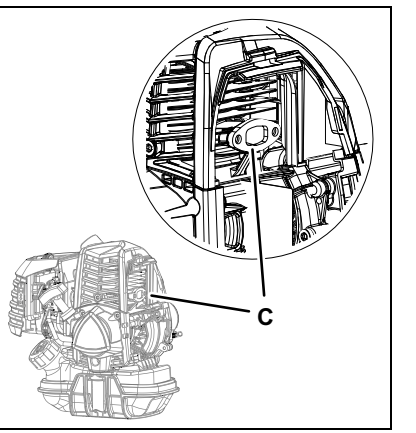

© 07/26 ECHO Incorporated

Carburetor Adjustment

Level 2

⚠ WARNING

Moving parts hazard. Contact with moving parts could cause bodily injury. Wear protective equipment. The cutting attachment may move during carburetor adjustment. Adjust the carburetor to assure blades do not move at idle or see your Authorized Service Dealer.

Engine Break-In

New engines must be operated a minimum duration of two tanks of fuel break-in before carburetor adjustments can be made. During break-in period your engine performance will increase and exhaust emissions will stabilize. Idle speed can be adjusted as required.

High Altitude Operation

This engine has been factory adjusted to maintain satisfactory starting and durability performance up to 330 m (1,100 ft.) above sea level (ASL). To maintain proper engine operation above 330 m (1,100 ft.) ASL the carburetor may need to be adjusted by an Authorized Service Dealer.

⚠ WARNING

- **For units equipped with a clutch, be sure the cutting attachment stops moving when the engine idles.**
- **Wear your protective equipment and observe all safety instructions.**
- **When the unit is turned off, make sure the cutting attachment has stopped before the unit is set down.**

NOTICE

If the engine is adjusted for operation above 330 m (1,100 ft.) ASL, carburetor must be re-adjusted when operating engine below 330 m (1,100 ft.) ASL, otherwise severe engine damage may result.

Note: Every unit is run at the factory and carburetor is set in compliance with emission regulations. Carburetor adjustments, other than idle speed, must be performed by an Authorized Service Dealer.

© 07/26 ECHO Incorporated

1. Check idle speed and reset to 3,000 RPM (if required).Turn idle screw (A) clockwise to increase or counterclockwise to decrease idle speed.

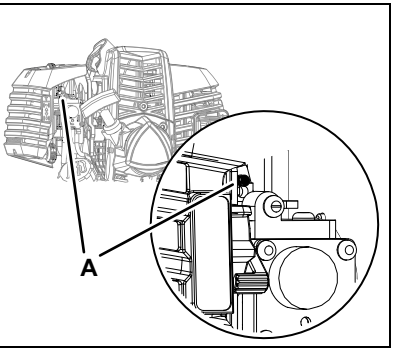

Upper Drive Shaft Lubrication

Level 1.

Parts required: Lithium-based grease.

1. Loosen clamping knob (A).
2. Pull locater pin (B) and rotate one-quarter turn counterclockwise to lockout position.
3. Remove attachment.

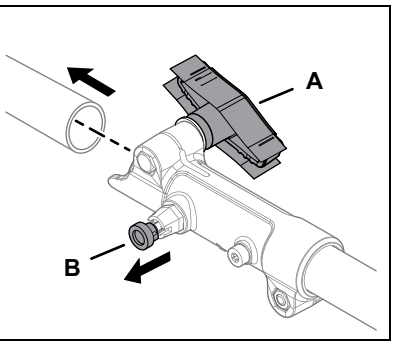

4. Loosen clamping screw (C) and remove set screw (D).
5. Remove coupler from upper drive shaft assembly.

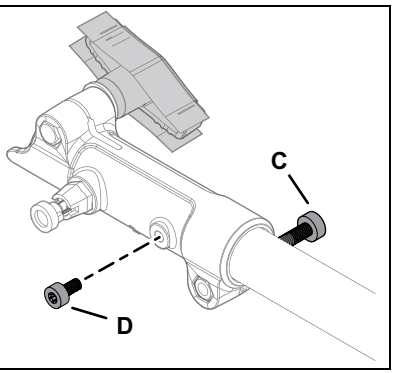

© 07/26 ECHO Incorporated

6. Slide upper flex cable (E) out of upper drive shaft assembly and wipe clean.
7. Apply a thin coating of lithium-based grease to cable and to adapter (F).
8. Slide upper flex cable back into upper drive shaft assembly.
9. Slide coupler onto upper drive shaft assembly until fully seated.

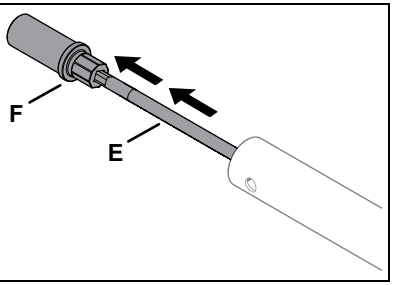

10. Align set screw hole in coupling with hole in upper drive shaft assembly.
11. Install and tighten set screw (D).
12. Tighten clamping screw (C).
13. Assemble the attachment.

© 07/26 ECHO Incorporated

TROUBLESHOOTING

DANGER

Fuel vapors are flammable and can cause fire and/or explosion. Never test for ignition spark by grounding spark plug near cylinder plug hole, otherwise serious personal injury can result.

ENGINE PROBLEM TROUBLESHOOTING CHART				
Problem	**Check**	**Status**	**Cause**	**Remedy**
Engine starts hard or Engine does not start.	Fuel at carburetor.	No fuel at carburetor.	Fuel filter or fuel line obstructed.	Clean or replace. See your Authorized Service Dealer.
	Fuel at cylinder.	No fuel at cylinder.	Carburetor	See your Authorized Service Dealer.
		Muffler wet with fuel.	Fuel mixture too rich.	Open choke. Clean or replace air filter. Adjust carburetor. See your Authorized Service Dealer.
	Spark at end of plug wire.	No spark.	Stop switch OFF. Electrical problem. Interlock switch.	Turn switch to ON. See your Authorized Service Dealer.
	Spark at plug.		Incorrect gap. Covered with carbon. Fouled with fuel. Spark plug defective.	Adjust to 0.65 mm (0.026 in.). Clean or replace spark plug.

© 07/26 ECHO Incorporated

ENGINE PROBLEM TROUBLESHOOTING CHART				
Problem	**Check**	**Status**	**Cause**	**Remedy**
Engine runs, but dies or Engine does not accelerate properly.	Air filter	Air filter dirty.	Normal wear.	Clean or replace.
	Fuel filter	Fuel filter dirty.	Contaminants or residue in fuel.	Replace filter or replace fuel.
	Fuel vent	Fuel vent plugged.	Contaminated fuel.	Clean or replace.
	Spark plug	Plug dirty or worn.	Normal wear.	Clean and adjust or replace.
	Carburetor	Improper adjustment.	Vibration	Adjust
	Cooling system	Cooling system dirty or plugged.	Extended operation in dirty or dusty locations.	Clean
	Spark arrester screen	Spark arrester screen plugged.	Normal wear.	Replace
Engine does not crank.			Internal engine problem.	See your Authorized Service Dealer.

© 07/26 ECHO Incorporated

STORAGE

Transportation

- Shut engine off before transporting.
- Secure unit to prevent fuel spillage and damage.

Short-Term Storage

- Shut engine off.
- Store unit in a dry, dust-free place, out of the reach of children.

Long-Term Storage (Over 30 Days)

⚠ DANGER

Explosion hazard. Fuel fumes can accumulate and explode if exposed to an open flame or spark. Store in a well ventilated area.

Do not store your unit for a prolonged period of time (30 days or longer) without performing protective storage maintenance.

1. Move stop switch to STOP position.
2. Allow engine to cool.
3. Clean exterior of unit.
4. Perform required maintenance.
5. Tighten all fasteners.

⚠ DANGER

Fire hazard. Fuel is flammable. Burning fuel will cause bodily injury or death. Wear protective equipment. Use care when mixing, storing or handling.

⚠ WARNING

Burn hazard. During operation the muffler or catalytic muffler and surrounding cover become hot. Always keep exhaust area clear of flammable debris during transportation or when storing, otherwise serious property damage or personal injury may result.

6. Drain fuel tank completely.

© 07/26 ECHO Incorporated

7. Press purge bulb six to seven times to remove remaining fuel from carburetor then drain tank again.
8. Close choke, start and run the engine until it stops due to lack of fuel.
9. Allow engine to cool.
10. Remove spark plug lead from spark plug.
11. Remove spark plug from cylinder.
12. Pour 7 mL (0.25 fl. oz.) of two-stroke engine oil into cylinder through spark plug hole.
13. Pull recoil starter handle two to three times to distribute oil inside engine.
14. Observe piston location through the spark plug hole. Pull the recoil handle slowly until the piston reaches the top of its travel and leave it there.
15. Install spark plug.
16. Connect spark plug lead to spark plug.
17. Store unit in a dry, dust-free place, out of the reach of children.

Hedge Trimmers Only

⚠ WARNING

Hedge trimmer blades are sharp. Avoid touching blades whenever possible, and always wear gloves to protect hands. Touching blades could lead to severe personal injury.

NOTICE

Always store and transport hedge trimmers in a stable, horizontal position. Support gear case and cutting blades to prevent excessive flexing, which may cause damage to these components. Always install blade cover when transporting or storing unit.

1. Apply clean oil to the entire length of the blade. Be certain the blade bolts are lubricated.
2. Install blade guard on blades.

Power Pruners® Only

NOTICE

Some tree sap and resins are corrosive and can damage guide bars, saw chains and sprockets.

1. Wash the guide bar and sprocket areas after each use, then coat metal parts with oil.

© 07/26 ECHO Incorporated

SPECIFICATIONS

MODEL	PAS-2620
Length	1,022 mm (40.2 in.)
Width	273 mm (10.7 in.)
Height	258 mm (10.2 in.)
Weight (dry)	4.7 kg (10.4 lb.)
Engine Type	Air-cooled, two-stroke, single cylinder gasoline engine
Bore	34.0 mm (1.34 in.)
Stroke	28.0 mm (1.1 in.)
Displacement	25.4 cc (1.55 $in.^3$)
Exhaust	Spark arrester muffler or spark arrester muffler with catalyst
Carburetor	Diaphragm with purge pump
Ignition System	Flywheel magneto, capacitor discharge ignition type
Spark Plug	NGK CMR7H Gap 0.65 mm (0.026 in.)
Fuel	Mixed (gasoline and two-stroke oil)
Fuel/Oil Ratio	50:1
Gasoline	Use 89 Octane unleaded. Do not use fuel containing methyl alcohol, more than 10% ethyl alcohol or 15% MTBE. Do not use alternative fuels such as E-20 or E-85.
Oil	ISO-L-EGD (ISO/CD 13738) and J.A.S.O. M345- FD, two-stroke, air-cooled engine oil
Fuel Tank Capacity	0.56 L (18.9 US fl. oz.)
Starter System	Automatic rewind starter
Clutch	Centrifugal type
Drive Shaft	6.35 mm (0.25 in.) flexible shaft
Rotating Direction	Counterclockwise (viewed from top)
Handle	Front - D-loop type with rubber anti-vibration grip Rear - Plastic molded with rubber over-mold
Shoulder Harness	Optional
Idle Speed	3,000 RPM
Clutch Engagement Speed	4,100 RPM

© 07/26 ECHO Incorporated

MODEL	PAS-2620
Wide Open Throttle Speed	11,200 RPM

ECHO Optional Attachments

⚠ WARNING

Attachment hazard. Use of a non-approved attachment combination could cause personal injury. Use only ECHO attachments. ECHO Incorporated will not be responsible for the failure of cutting devices, attachments or accessories which have not been tested and approved by ECHO.

Recommended Optional Attachments	
Articulating Hedge Trimmer	99944200596
Blower	99944200490AB
Brushcutter	99944200601
Curved Shaft Edger	99944200470AB
Curved Shaft Trimmer	99944200615
Mid Reach Hedge Trimmer	99944200640
Hedge Trimmer	99944200486
Pro Paddle™	99944200620
Pro Sweep™	99944200553
Power Pruner™	99944200532
ProTorque Trimmer	99944200545
Speed-Feed® Trimmer	99944200540
Straight Shaft Edger	99944200475
Tiller/Cultivator	99944200513
Bed Redefiner	99944200465
3 Foot Extension*	99944200536
* For use with Articulating Hedge Trimmer, Hedge Trimmer, and Power Pruner™ attachments only.	

© 07/26 ECHO Incorporated

PRODUCT REGISTRATION

Thank you for choosing ECHO Power Equipment

Please go to http://www.echo-usa.com/Warranty/Register-Your-ECHO to register your new product on-line. It's ***FAST*** and ***EASY***!
NOTE: Your information will never be sold or misused by ECHO Incorporated. Registering your purchase enables us to contact you in the unlikely event of a service update or product recall, and verifies your ownership for warranty consideration.

If you do not have access to the Internet, you can complete the form below and mail to:

ECHO Incorporated, Product Registration, PO Box 1139,
Lake Zurich, IL 60047.

© 07/26 ECHO Incorporated

PRODUCT REGISTRATION CARD : TARJETA DE REGISTRO : CARTE D'ENREGISTREMENT DU PRODUIT

ONLINE OPTION: Register online and save a stamp! You will be alerted of product updates and/or be sent new ECHO product information and special offers. Simply go to: **www.echo-usa.com**

OPCIÓN POR INTERNET: ¡Registrese en la pagina web y ahorre una estampilla! Le alertarán sobre actualizaciones del producto y/o se le enviara información sobre los nuevos productos ECHO y las ofertas especiales. Simplemente visite: **www.echo-usa.com**

OPTION EN LIGNE : Enregistrer en ligne et épargner un timbre! Vous serez informé sur les nouveaux produits ECHO et les mises à jour de produit ainsi que les offres spéciales. Simplement visitez le: **www.echo-usa.com**

Please Print : Por Favor Enscriba Con Letra De Molde : En Lettre Carré S.V.P.

Confidential: Information provided will not be shared or sold

Purchaser's Name : Nombre del Comprador : Nom de l'acheteur

Address : Dirección : Adresse

City : Ciudad : Ville | *State : Estado : Province* | *Zip Code : Código Postal : Code Postal*

E-Mail Address : Dirección De Correo Electrónico : Courrier Électronique

Phone Number : Número De Teléfono : Téléphone | *Date of Purchase : Fecha de la Compra : Date de l'achat*

Where Purchased : Nombre del Almacén donde fue Comprado : Lieu d'achat

Model Number : Numero del Modelo : No. de modéle | *Serial Number : Numero de Serie : No. de série*

Registering your purchase enables us to contact you in the unlikely event of a service update or product recall and verifies your ownership in the event of loss. : El registrar su compra nos permite estar en contacto con usted en caso de cualquier evento como el aviso de tiempo de servicio o la revocación del producto y verificación de propiedad en caso de robo o pérdida. : L'enregistrement de votre achat nous permettra de vous contacter dans le cas improbable de modifications des instructions d'entretien ou de rappel du produit et vérifier que vous êtes le propriétaire en cas de vol ou de perte.

Primary use of tool: ☐ Professional ☐ Homeowner ☐ Rental Equip.
Uso primario de la herramienta: ☐ Profesional ☐ Dueño de casa ☐ Alquiler
Usage principal : ☐ Professionnel ☐ Residential ☐ Location

Do you wish to receive periodic ECHO product information and special offers by e-mail? ☐ Yes ☐ No
¿Desea usted recibir información periódica y ofertas especiales por correo electronico sobre el producto ECHO? ☐ Yes ☐ No
Souhaitez-vous recevoir périodiquement de l'information sur les produits ECHO et les offres spéciales par courrier électronique ? ☐ Oui ☐ Non

Did you visit the ECHO website before purchasing your product?
☐ Yes ☐ No
Visitó usted la pagina web ECHO antes de comprar su producto?
☐ Si ☐ No
Avez-vous visité le site d'ECHO avant de procurer votre produit?
☐ Oui ☐ Non

What factor(s) most influenced your purchase?

☐ Performance	☐ Price	☐ Dealer
☐ Reliability	☐ Prior Experience	☐ Quality
☐ Friend/Family	☐ Brand	☐ Warranty

¿Qué factor(es) influenció más en su compra?

☐ Funcionamiento	☐ Precio	☐ Distribuidor
☐ Confiabilidad	☐ Experiencia Anterior	☐ Calidad
☐ Amigo/Familia	☐ Marca	☐ Garantía

Quel facteur (facteurs) vous a influencé le plus?

☐ Performance	☐ Prix	☐ Marchand
☐ Fiabilité	☐ Expérience	☐ Qualité
☐ Ami/Famille	☐ Marque	☐ Garantie

ECHO INC., 400 Oakwood Rd., Lake Zurich, IL 60047
1.800.432.ECHO WWW.ECHO-USA.COM

X7572270206 02-2012

NOTES

© 07/26 ECHO Incorporated

© 07/26 ECHO Incorporated

U97015001001 - U97015999999

ECHO INCORPORATED
400 Oakwood Road
Lake Zurich, IL 60047
www.echo-usa.com