Operator's Manual DLM-2120SP Mower

⚠ WARNING

Cancer and Reproductive Harm
www.P65Warnings.ca.gov

⚠ WARNING

Read and understand all provided literature before use.
Failure to do so could result in serious injury.

Note: This product complies with CAN ICES-002 / NMB-002

99922238816

© 08/2026 ECHO Incorporated

TABLE OF CONTENTS

Introduction....3
Servicing Information....3
Parts / Serial Number....3
Service....4
ECHO Consumer Product Support....4
Product Registration....4
Additional Literature....4
Safety....5
Manual Safety Symbols and Important Information....6
International Symbols....6
Lawn Mower Safety Warnings....8
Environmentally Safe Battery Disposal....12
FCC Statement....13
Description....14
Contents....15
Assembly....16
Unfold the Lower handle....16
Unfold the Upper handle....16
Lawn Mower Operating Modes....17
Install Grass Catcher Bag....17
Mulching Mode....18
Install Side-Discharge Chute....18
Adjust Cutting Height....19
Temperature Information....19
Battery Charging....20
Installing and Removing the Battery....22
Operation....23
Starting the Mower....23
Stopping the Mower....23
Self-Propel Drive System....24
Operation on Slopes....25
Empty the Grass Catcher Bag....25
Operation Tips....26
Mowing Tips....26
Mulching Tips....26
Maintenance....26
Maintenance and Care....28
Replacing the Blade....29
Troubleshooting....30
Storage....33
Storage After Use....33
Vertical Storage....34
Specifications....35
Product Registration....36
Warranty....38

© 08/2026 ECHO Incorporated

INTRODUCTION

Specifications, descriptions and illustrative material in this literature are as accurate as known at the time of publication, but are subject to change without notice. Illustrations may include optional equipment and accessories, and may not include all standard equipment.



Read and understand all provided literature. Literature contains specifications and information for safety, operation, maintenance, storage, and assembly specific to this product. Scan QR code for more information.



For additional literature, including safety manuals where applicable, or questions regarding terms used in this manual, visit:

https://www.echo-usa.com/manuals

SERVICING INFORMATION

Parts / Serial Number

Genuine ECHO Parts and Assemblies for your ECHO products are available only from an Authorized ECHO Dealer. When you do need to buy parts always have the Model Number and Serial Number of the unit with you. For future reference write them in the space provided below.

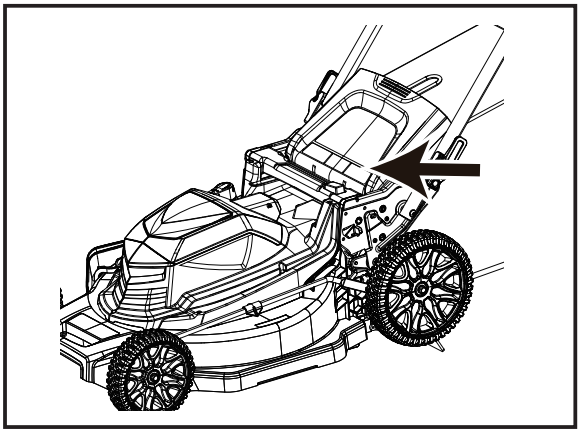

Model No. _____ Serial No. _____

Service

Service of this product during the warranty period must be performed by an Authorized ECHO Service Dealer. For the name and address of the Authorized ECHO Service Dealer nearest you, ask your retailer or call: 1-800-432-ECHO (3246). Dealer information is also available on our website www.echo-usa.com. When presenting your unit for warranty service/ repairs, proof of purchase is required.

© 08/2026 ECHO Incorporated

ECHO Consumer Product Support

If you require assistance or have questions concerning the application, operation, or maintenance of this product, call the ECHO Consumer Product Support Department at 1-800-432-ECHO (3246) from 8:00 am to 5:00 pm (Central Standard Time) Monday through Friday. Before calling, please know the model and serial number of your unit.

Product Registration

Register your ECHO equipment online at www.echo-usa.com or by filling out the product registration sheet included in this manual. Registering your product confirms warranty coverage and provides a direct link to ECHO if we find it necessary to contact you.

Additional Literature

In addition to finding information online, information is available from your Authorized ECHO Service Dealer, or by contacting ECHO Incorporated, 400 Oakwood Road, Lake Zurich, IL 60047, 1-800-432-ECHO (3246).

© 08/2026 ECHO Incorporated

Manual Safety Symbols and Important Information

Read this section before using your product:

- The precautions described in this section contain important safety information. Please observe them carefully.
- You must also read the precautions that appear in the body of the manual itself.

Throughout this manual and on the product itself, you will find safety alerts and helpful, informational messages preceded by symbols or key words. The following is an explanation of those symbols and key words and what they mean to you.

⚠ DANGER

The safety alert symbol accompanied by the word "DANGER" calls attention to an act or condition which WILL lead to serious personal injury or death if not avoided.

⚠ WARNING

The safety alert symbol accompanied by the word "WARNING" calls attention to an act or condition which CAN lead to serious personal injury or death if not avoided.

⚠ CAUTION

The safety alert symbol accompanied by the word "CAUTION" calls attention to an act or condition which might lead to minor or moderate personal injury if not avoided.

NOTICE

The enclosed message provides information necessary for the protection of the unit.

Note: This enclosed message provides tips for use, care and maintenance of the unit.



CIRCLE AND SLASH SYMBOL

This symbol means the specific action shown is prohibited. Ignoring these prohibitions can result in serious or fatal injury.

© 08/2026 ECHO Incorporated

International Symbols

Some of the following symbols may be used on this product. Please study them and learn their meaning. Proper interpretation of these symbols will allow you to operate the product better and safer.

Symbol	Description
	Precautions that involve your safety.
	To reduce the risk of injury, user must read instruction manual.
	Keep hands and feet away from blade and cutting area.
	CAUTION — Do not stare at operating lamp.
	WARNING — Beware of thrown objects — keep bystanders away.
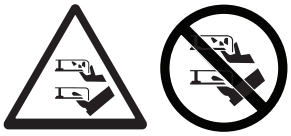	WARNING — Keep hands and feet away from the blades.
	WARNING — Disconnect all batteries before maintenance.

© 08/2026 ECHO Incorporated

	Always wear eye protection with side shields marked to comply with ANSI Z87.1 when operating this equipment.
	Do not expose the product to rain or moist conditions.
IPX4	Protection from splashing water.

© 08/2026 ECHO Incorporated

SAFETY

Lawn Mower Safety Warnings

⚠ WARNING

Read all safety warnings, instructions, illustrations and specifications provided with this lawnmower. Failure to follow all instructions listed below may result in electric shock, fire and/or serious injury.

Save all warnings and instructions for future reference.

Work area safety

- **To avoid bystander contact with the moving blade or a thrown object injury, keep the area of operation clear of all bystanders, particularly small children.** *Stop the lawnmower and any attachment(s) if anyone enters the area. Contact with the moving blade or thrown objects may result in serious personal injury or death.*
- **Only operate the lawnmower in daylight or good artificial light.** *Dark areas invite accidents.*
- **Do not operate lawnmowers in explosive atmospheres, such as in the presence of flammable liquids, gases or dust.** *Lawnmowers create sparks which may ignite the dust or fumes.*
- **Do not use the lawnmower in bad weather conditions, especially when there is a risk of lightning.** *This decreases the risk of being struck by lightning.*
- **Thoroughly inspect the area where the lawnmower is to be used and remove all stones, sticks, wires, bones, and other foreign objects.** *Thrown objects can cause personal injury.*

Electrical safety

- **Do not expose the lawnmower to rain or wet conditions.** *Water entering a lawnmower may increase the risk of electric shock.*

Personal safety

- **Use personal protective equipment.** *Always wear eye protection. Protective equipment will reduce personal injuries.*
- **Dress properly.** *Do not wear loose clothing or jewelry. Keep your hair and clothing away from moving parts. Loose clothes, jewelry or long hair can be caught in moving parts.*
- **While operating the lawnmower, always wear long trousers.** *Exposed skin increases the likelihood of injury from thrown objects.*

© 08/2026 ECHO Incorporated

- **While operating the lawnmower, always wear non-slip and protective footwear.** *Do not operate the lawnmower when barefoot or wearing open sandals. This reduces the chance of injury to the feet from contact with the moving blade.*
- **Prevent unintentional starting.** *Ensure the switch is in the off-position before connecting to power source and/or batteries, picking up or carrying the lawnmower. Carrying a lawnmower with your finger on the switch or energizing a lawnmower that has the switch on invites accidents.*
- **Remove any adjusting key or wrench before turning the lawnmower on.** *A wrench or a key left attached to a rotating part of the lawnmower may result in personal injury.*
- **Keep proper footing and balance at all times.** *This enables better control of the lawnmower in unexpected situations.*
- **Stay alert, watch what you are doing and use common sense when operating a lawnmower.** *Do not use a lawnmower while you are tired or under the influence of drugs, alcohol or medication. A moment of inattention while operating a lawnmower may result in serious personal injury.*
- **Do not let familiarity gained from frequent use of lawnmower allow you to become complacent and ignore lawnmower safety principles.** *A careless action can cause severe injury within a fraction of a second.*
- **To avoid operator blade contact or a thrown object injury, stay in the operator zone behind the lawnmower handles.** *Blade contact or thrown objects may result in serious personal injury.*
- **Do not touch blades and other hazardous moving parts while they are still in motion.** *This reduces the risk of injury from moving parts.*

Lawnmower use and care

- **Use the lawnmower and accessories in accordance with these instructions, taking into account the working conditions and the work to be performed.** *Use of the lawnmower for operations different from those intended may result in a hazardous situation.*
- **Before using the lawnmower, always visually inspect to see that the blade(s) and the blade(s) assembly are properly secured and not worn or damaged.** *Loose, worn, or damaged parts may increase the risk of injury.*
- **Keep guards and other safety devices in place, properly mounted, and in working order.** *A guard or other safety device that is loose, damaged, or is not functioning correctly may result in personal injury.*
- **Keep all cooling air inlets clear of debris.** *Blocked air inlets and debris may result in overheating or risk of fire.*
- **Do not use the lawnmower if the switch does not turn it on and off.** *Any lawnmower that cannot be controlled with the switch is dangerous and must be repaired.*

© 08/2026 ECHO Incorporated

- **Do not operate the lawnmower in wet grass.** *Walk, never run. This reduces the risk of slipping and falling which may result in personal injury.*
- **Do not operate the lawnmower on excessively steep slopes.** *This reduces the risk of loss of control, slipping and falling which may result in personal injury.*
- **Do not force the lawnmower.** *Use the correct lawnmower for your application. The correct lawnmower will do the job better and safer at the rate for which it was designed.*
- **Be aware of the mower and attachment discharge direction and do not point the mower discharge at anyone.** *Thrown objects can cause personal injury.*
- **Use extreme caution when reversing or pulling the lawnmower towards you.** *Always be aware of your surroundings.This reduces the risk of tripping during operation.*
- **When working on slopes, always be sure of your footing, always work across the face of slopes, never up or down and exercise extreme caution when changing direction.** *This reduces the risk of loss of control, slipping and falling which may result in personal injury*.
- **Operate the disabling device and/or remove all battery packs, if removable, from the lawnmower before making any adjustments, changing accessories, or storing the lawnmower.** *Such preventive safety measures reduce the risk of starting the lawnmower accidentally.*
- **Keep handles and grasping surfaces dry, clean and free from oil and grease.** *Slippery handles and grasping surfaces do not allow for safe handling and control of the lawnmower in unexpected situations.*
- **Check the grass catcher frequently for wear or deterioration.** *A worn or damaged grass catcher may increase the risk of personal injury.*
- **Before removing the grass catcher, turn off the motor and wait until the blade(s) comes to a complete stop.** *The cutting blade(s) continues to rotate after the blade control is released. Never place any part of the body in the blade(s) area until you are certain the motor is off and the blade(s) has stopped rotating. Contact with the moving cutting blade(s) may result in serious personal injury.*
- **Before unclogging the chute, turn off the motor, wait until the blade(s) comes to a complete stop, operate the disabling device and/ or remove all batteries, if removable.** *The cutting blade(s) continues to rotate after the blade control is released. Never place any part of the body in the blade(s) area until you are certain the motor is off and the blade(s) has stopped rotating. Contact with the moving cutting blade(s) may result in serious personal injury.*
- **Before cleaning or inspecting the lawnmower, turn off the motor, wait until the blade(s)comes to a complete stop, operate the disabling device and/or remove all batteries, if removable.** *Accidental contact with the moving blade and moving parts may result in personal injury.*

© 08/2026 ECHO Incorporated

- **Maintain the lawnmower and accessories.** *Check for misalignment or binding of moving parts, breakage of parts and any other condition that may affect the lawnmower's operation. If damaged, have the lawnmower repaired before use. Many accidents are caused by poorly maintained lawnmowers.*
- **Store idle lawnmowers out of the reach of children and do not allow persons unfamiliar with the lawnmower or these instructions to operate the lawnmower.** *Lawnmowers are dangerous in the hands of untrained users.*

Battery lawnmower use and care

- **Use only with ECHO eFORCE® 56V battery series.** *Use of any other batterypacks may create a risk of injury and fire.*
- **Recharge only with ECHO eFORCE® 56V battery series chargers.***A charger that is suitable for one type of battery pack(s) may create a risk of fire when used with another battery pack(s).*
- **Follow all charging instructions and do not charge the battery pack(s) or lawnmower outside the temperature range specified in the instructions.** *Charging improperly or at temperatures outside the specified range may damage the battery and increase the risk of fire.*
- **Do not use a battery pack or lawnmower that is damaged or modified.** *Damaged or modified batteries may exhibit unpredictable behavior resulting in fire, explosion or risk of injury.*
- **Do not expose a battery pack(s) or lawnmower to fire or excessive temperature.** *Exposure to fire or temperature above 265°F(130°C) may cause explosion.*
- **Under abusive conditions, liquid may be ejected from the battery(ies); avoid contact.** *If contact accidentally occurs, flush with water. If liquid contacts eyes, additionally seek medical help. Liquid ejected from the battery(ies) may cause irritation or burns.*
- **When battery packs are not in use, keep them away from other metal objects, like paper clips, coins, keys, nails, screws or other small metal objects that can make a connection from one terminal to another.** *Shorting the battery terminals together may cause burns or a fire.*

Service

- **Have your lawnmower serviced by a qualified repair person using** *only identical replacement parts. This will ensure that the safety of the lawnmower is maintained. Use of parts which do not meet the original equipment specifications may lead to improper performance and compromise safety.*
- **Never service damaged battery packs.** *Service of battery packs should only be performed by the manufacturer or authorized service providers.*

© 08/2026 ECHO Incorporated

Environmentally Safe Battery Disposal

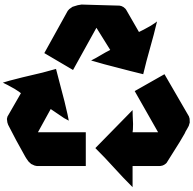



Recycle your ECHO 56V battery system batteries FOR FREE at Rechargeable Battery Recycling Corporation (RBRC) recycling locations. Call 1-800-822-8837 or visit https://www.call2recycle.org for details.

The toxic and corrosive materials below are in the batteries used in this machine: Lithium-Ion, a toxic material.

⚠ WARNING

Discard all toxic materials in a specified manner to prevent contamination of the environment. Before discarding damaged or worn out Li-ion battery, contact your local waste disposal agency, or the local Environmental Protection Agency for information and specific instructions. Take the batteries to a local recycling and/or disposal center, certified for lithium-ion disposal.

⚠ WARNING

If the battery cracks or breaks, with or without leaks, do not recharge it and do not use. Discard it and replace with a new battery. DO NOT TRY TO REPAIR IT! To prevent injury and risk of fire, explosion, or electric shock, and to avoid damage to the environment:

- Cover the terminals of the battery with heavy-duty adhesive tape.
- Do not try to remove or destroy any of the battery components.
- Do not try to open the battery.
- If a leak develops, the released electrolytes are corrosive and toxic. Do not get the solution in the eyes or on skin, and do not swallow it.
- Do not put these batteries in your regular household trash.
- Do not incinerate.
- Do not put them where they will become part of any waste landfill or municipal solid waste stream.
- Take them to a certified recycling or disposal center.

© 08/2026 ECHO Incorporated

FCC Statement

This device complies with Part 15 of the FCC Rules. Operation is subject to the following two conditions:

- This device may not cause harmful interference.
- This device must accept any interference received, including interference that may cause undesired operation.

⚠ CAUTION

Changes or modifications not expressly approved by the party responsible for compliance could void the user's authority to operate the equipment.

NOTICE

This equipment has been tested and found to comply with the limits for a Class B digital device, pursuant to Part 15 of the FCC Rules. These limits are designed to provide reasonable protection against harmful interference in a residential installation. This equipment generates, uses and can radiate radio frequency energy, and if not installed and used in accordance with the instructions, may cause harmful interference to radio or television reception. The reception can be determined by turning the equipment off and on. The user is encouraged to try to correct the interference by one or more of the following measures:

- *Reorient or relocate the receiving antenna.*
- *Increase the separation between the equipment and the receiver.*
- *Connect the equipment into an outlet on a circuit different from that to which the receiver is connected.*
- *Consult the dealer or an experienced radio/TV technician for help.*

© 08/2026 ECHO Incorporated

DESCRIPTION

Locate the safety label(s) on your unit. Make sure the label(s) is legible and that you understand and follow the instructions on it. If a label cannot be read, a new one can be ordered from your ECHO dealer. Safety label is for example only. Your label my appear slightly different.

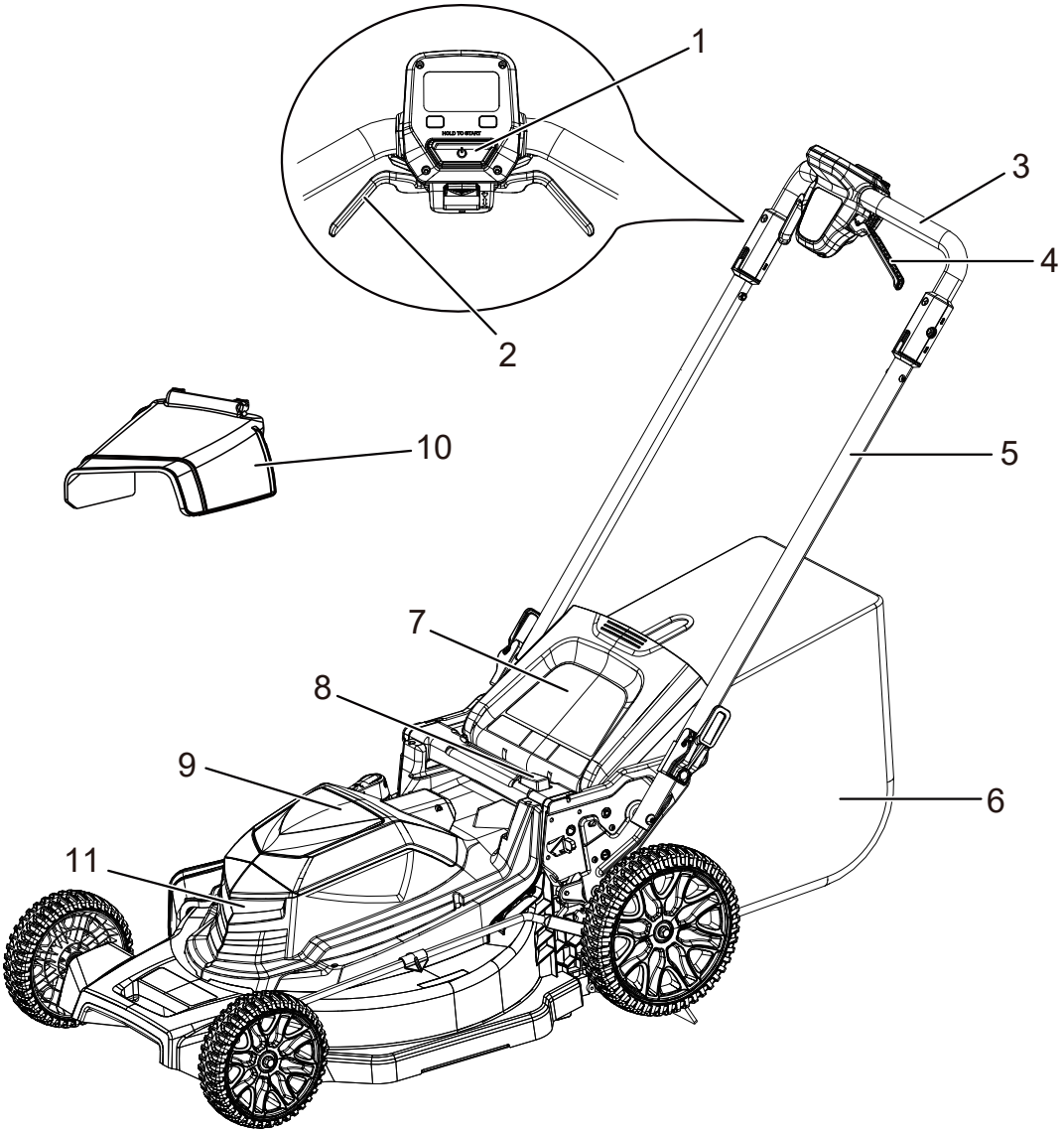



© 08/2026 ECHO Incorporated

1. Start button
2. Self-propel drive lever
3. Upper handle
4. Start handle
5. Lower handle
6. Grass catcher
7. Rear cover
8. Height adjustment button
9. Battery door
10. Side discharge chute
11. LED headlight

CONTENTS

The ECHO product you purchased has been factory pre-assembled for your convenience. Due to packaging restrictions, some assembly may be necessary.

After opening the carton, check for damage. Immediately notify your retailer or ECHO Dealer of damaged or missing parts. Use the contents list to check for missing parts.

1 Mower
1 Operator's manual
1 Side discharge chute
1 Grass catcher bag

NOTICE

For a complete list of compatible batteries for this and all ECHO 56V battery system tools, scan this code or visit https://www. echo-usa.com/battery-information

© 08/2026 ECHO Incorporated

NOTICE

Do not damage the cable while installing the upper handle.

Unfold the Lower Handle

1. Place the mower upright in horizontal position.
2. Remove the packing material from the cable.
3. Press the handle lock levers (A) on both sides. While holding the levers, lift the lower handle (B) into the operating position.
4. Release the lever and the lower handle will lock into place.

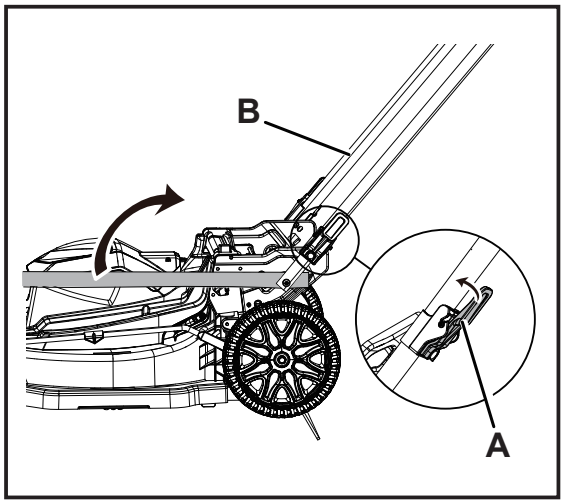

Unfold the Upper Handle

1. Lift and rotate the upper handle controls (C).
2. Once aligned, push the upper handle controls down into place.
3. Ensure the mounting holes on both sides of the upper handle controls align with the lower handle mounting holes. Install the upper handle bolts (D).

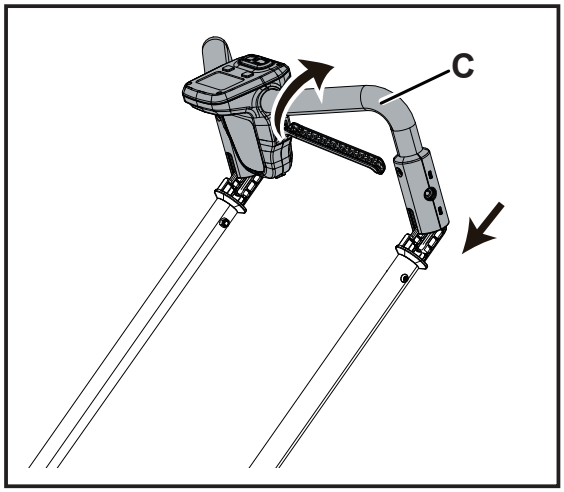

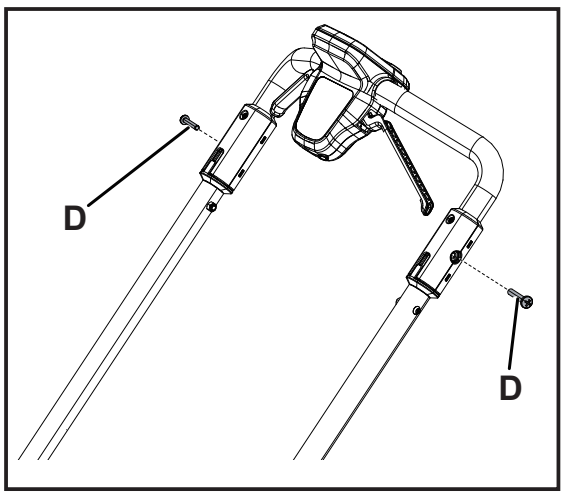

© 08/2026 ECHO Incorporated

Lawn Mower Operating Modes

This lawn mower has three operating modes: rear bagging, mulching, and side discharging. Each mode requires different accessories. See table for accessory usage by mode.

To Convert Mower	Mulch Door	Grass Catcher Bag	Side Discharge Chute
For rear bagging	×	√	×
For mulching	√	×	×
For side discharging	√	×	√

Install Grass Catcher Bag

NOTICE

Ensure side-discharge chute is removed from lawn mower when installing grass catcher bag.

1. Remove battery.
2. Remove side discharge chute (if installed).
3. Press and rotate the mulch on demand lever (E) to the BAG position and release to lock into place.

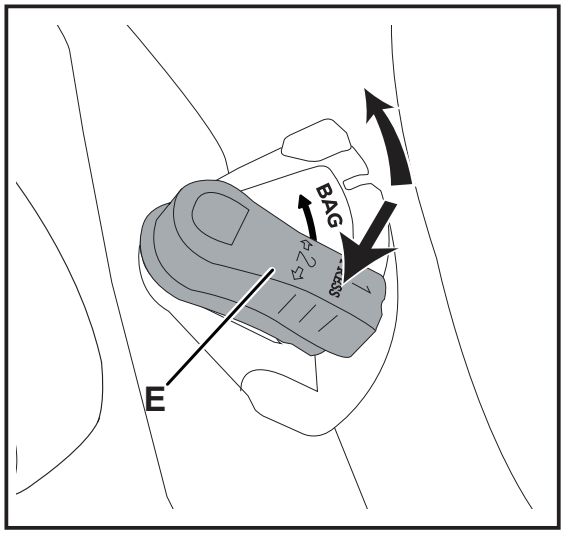

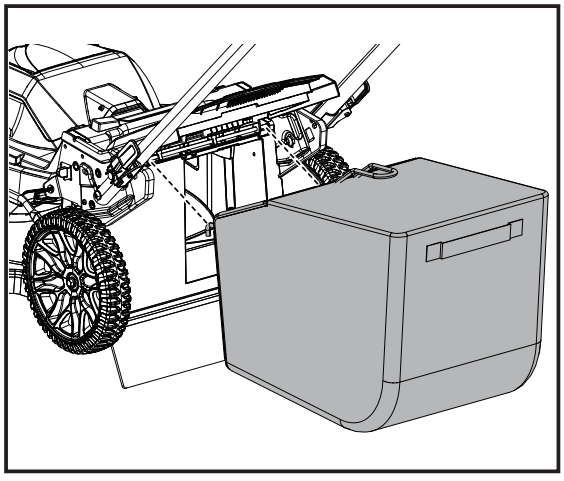

4. Raise the rear cover.
5. Install grass catcher bag.
6. Lower rear cover.

© 08/2026 ECHO Incorporated

Mulching Mode

WARNING

Close mulch door to recycle lawn clippings. Failure to do so allows objects to be thrown towards you or bystanders and contact with the blade could occur. Thrown objects or blade contact can cause serious injury or death.

NOTICE

Ensure side-discharge chute and grass catcher bag are removed from lawn mower when using mulching mode.

1. Remove battery.
2. Remove side discharge chute (if installed).
3. Remove grass catcher bag (if installed).
4. Press and rotate the mulch on demand lever (E) to the MULCH position and release to lock into place.

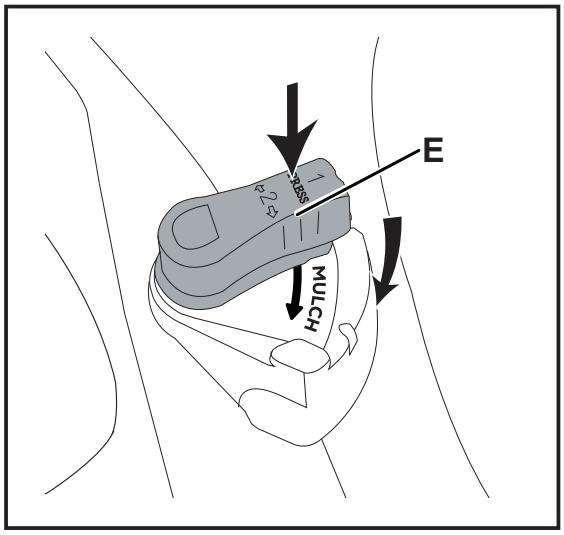

Install Side-Discharge Chute

NOTICE

Ensure that grass catcher bag is removed from lawn mower, and mulch on demand switch is in MULCH position before using side discharge chute.

1. Remove battery.
2. Raise the side discharge deflector (F).
3. Install side-discharge chute (G) under deflector.
4. Release the side discharge deflector (F).

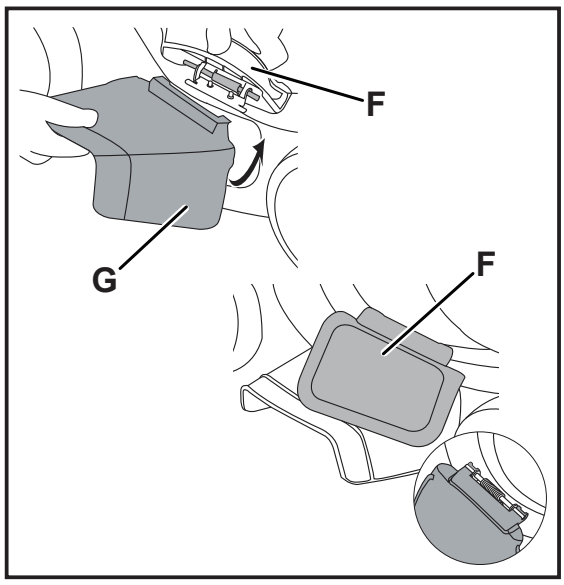

© 08/2026 ECHO Incorporated

Adjust Cutting Height

⚠ WARNING

Contact with a moving blade can cause severe personal injury. Stop engine and ensure blade has come to a complete stop before adjusting height.

Adjust cutting height to suit lawn requirements. The middle position is suitable for most lawns.

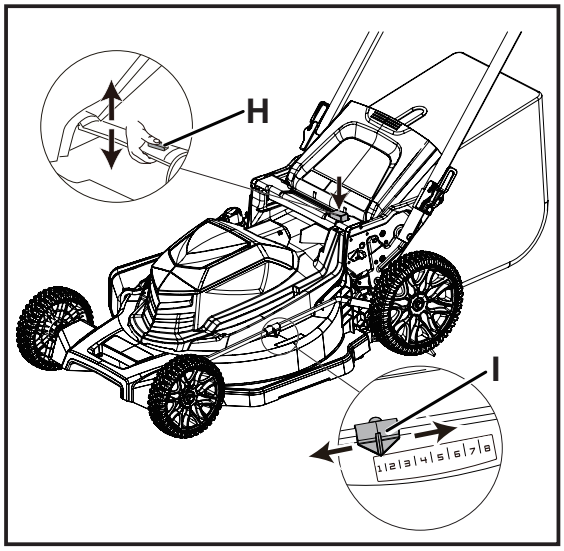

Raise Cutting Height

1. Grasp the rear handle, press and hold the height adjustment button (H), and pull mower upward to move the height adjustment indicator (I) to a higher cutting position.
2. Release height adjustment button (H) to lock in cutting height setting.

Lower Cutting Height

1. Grasp the rear handle, press and hold the height adjustment button (H) and push mower downward to move the height adjustment indicator (I) lower and decrease cutting height.
2. Release the height adjustment button (H) to lock in cutting height setting.

Temperature Information

Recommended ambient temperature range:

	Charging		Usage/Discharging		Storage	
	Low	High	Low	High	Low	High
Product[1]	Not Applicable		32°F(0°C)	113°F(45°C)	32°F(0°C)	113°F(45°C)
Battery[2][3]	39°F(4°C)	104°F (40°C)	32°F(0°C)	113°F(45°C)	32°F(0°C)	113°F(45°C)
Charger	39°F(4°C)	104°F(40°C)	Not Applicable		32°F(0°C)	113°F(45°C)

© 08/2026 ECHO Incorporated

[1]Assumes the battery is just off the charger or stored at the temperature range noted for Charger Usage 39° F (4°C) - 104°F (40°C).

[2]Hot batteries in high ambient temperatures require longer charge times.

[3]To maximize battery life of batteries being stored more than 3 months, ECHO recommends batteries being stored at 3 green lights on the battery capacity indicator (BCI) at an ambient temperature of 60°F (16°C) - 80°F (27°C), and not in direct sunlight.

NOTE: Long term storage of batteries in conditions or charge levels on the battery capacity indicator (BCI) other than noted above could degrade the performance and runtime of the battery.

Battery Charging

NOTICE

See separate operator's manuals packaged with battery and charger.

⚠ WARNING

- Use only with ECHO eFORCE® 56V battery series and chargers.
- Keep charger and battery away from damp conditions and all liquids.
- Do not operate the charger on an easily combustible surface (e.g. paper, textiles) or in an environment with a high risk of fire.
- Do not cover the charger. Covering the charger will prevent it from cooling.
- Do not operate the charger in explosive atmospheres, such as in the presence of flammable liquids, gases or dust. Charger can produce sparks which may ignite the dust or fumes - there is a risk of explosion.
- Connect the charger only to the mains of voltage and frequency specified on the rating plate.
- Connect the charger only to an easily accessible wall outlet.
- Never insert objects in the battery's or charger's cooling slots.
- Do not charge or use a defective, damaged or deformed battery and charger.
- Do not open, damage or drop the battery or the charger.
- Fluid may leak from the battery if it is damaged or used improperly. Avoid contact with the skin. In the event of accidental contact, wash the affected skin thoroughly with soap and plenty of water. If battery fluid gets into the eyes, do not rub them. Rinse the eyes immediately with plenty of water for at least 15 minutes and seek medical attention.

© 08/2026 ECHO Incorporated

- Never bridge (short circuit) the battery contacts or the charger's terminals with metallic objects.
- Protect from direct sunlight, heat and open flames and never throw battery into fire; there is a risk of explosion.
- In the event of smoke or fire in the charger, disconnect it from the wall outlet immediately.
- If the connecting cord is damaged, immediately disconnect the plug from the power supply to avoid the risk of electric shock.
- Do not expose battery to microwaves or high pressure.
- To reduce the risk of stumbling, position and mark the connecting cord in such a way that it cannot be damaged or endanger others.

NOTICE

The battery comes partially charged from the factory and needs to be fully charged before first use. Charge the battery when it no longer produces sufficient power to operate the unit or when battery lights indicate that the battery is low.

1. Plug charger AC cord into the wall outlet.
2. Align ridges on battery with grooves on charger, and slide battery into charger.
3. During normal charging, the charger LED (A) will blink GREEN.

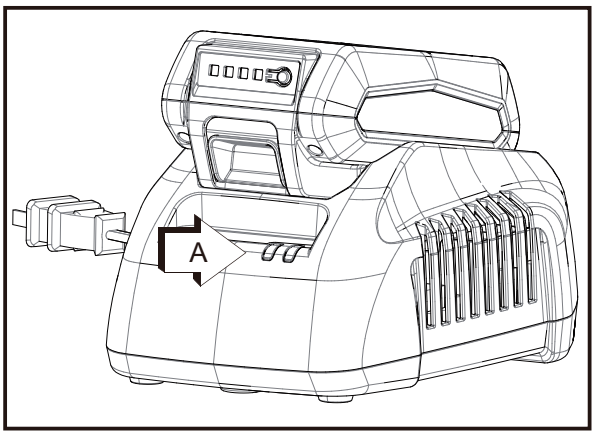

NOTICE

If charger detects a problem, LED will blink RED. Remove battery from charger, clear obstructions from contacts and reinstall battery into charger. If battery is outside acceptable temperature range (See Recommended Ambient Temperature chart) LED will remain RED.

© 08/2026 ECHO Incorporated

4. When charging is complete, LED will remain GREEN. See battery manual for charging time.
5. Verify battery is fully charged. Remove battery from charger, press battery charge status button (B), and check LED display.

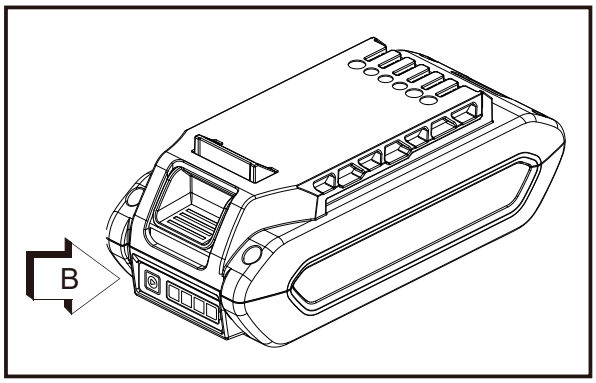

- One green light indicates that the battery has 1-24% charge.
- Two green lights indicate that the battery has 25-54% charge.
- Three green lights indicate that the battery has 55-79% charge.
- Four green lights indicate that the battery has 80-100% charge.

6. Unplug charger AC cord from the wall outlet.

Installing and Removing the Battery

NOTICE

The battery comes partially charged from the factory and needs to be fully charged before first use.

Note: See separate Operator's Manual packaged with the battery.

Installing the Battery

1. Open the battery door.
2. Align the battery with the mower's battery port. Slide battery into battery compartment.
3. Make sure the battery latch snaps in place and that battery is fully seated and secure before beginning operation.
4. Close the battery door.

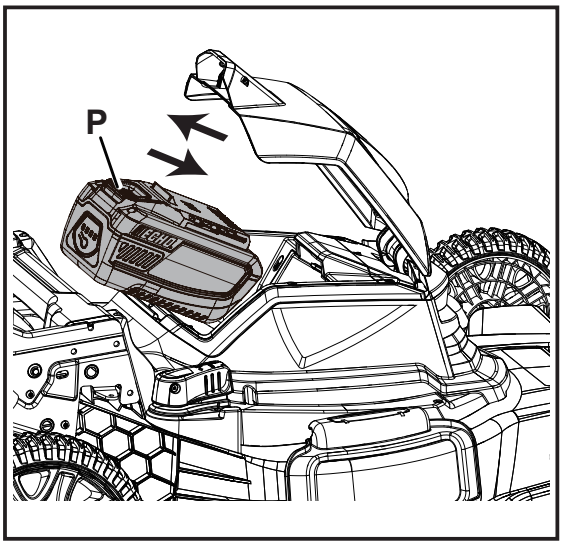

Removing the Battery

1. Stop the mower.
2. Open the battery door.
3. Press the battery latch release (P) and remove the battery.
4. Close the battery door.

© 08/2026 ECHO Incorporated

Starting the Mower

⚠ WARNING

Improper starting can cause severe personal injury. Observe all precautions listed in the Safety section.

NOTICE

Wait until the blade fully stops before you start the mower again. Do not quickly turn the mower off and on.

1. Push and hold the start button (J).
2. While pressing the start button (J), pull the start handle (K) towards the handle bar.
3. Once the mower has started, release the start button.
4. Press turbo button (L) to speed up.
5. Press LED light button (M) to turn on the LED headlight.

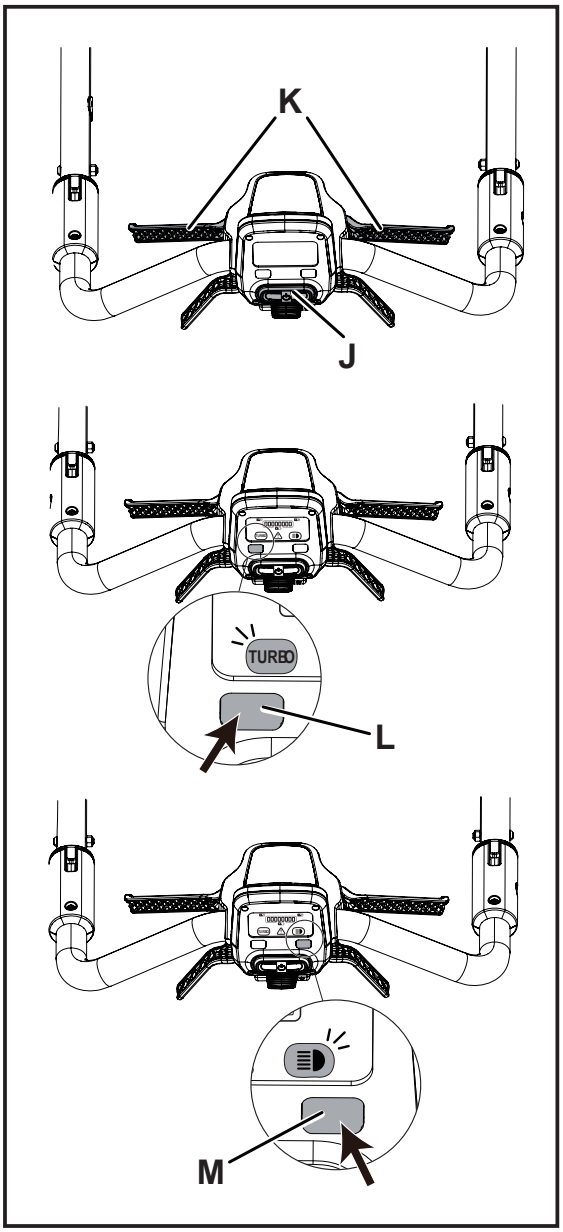

Stopping the Mower

1. Release the start handle to stop the mower.

Note: Always remove the battery after completing work.

© 08/2026 ECHO Incorporated

Self-Propel Drive System

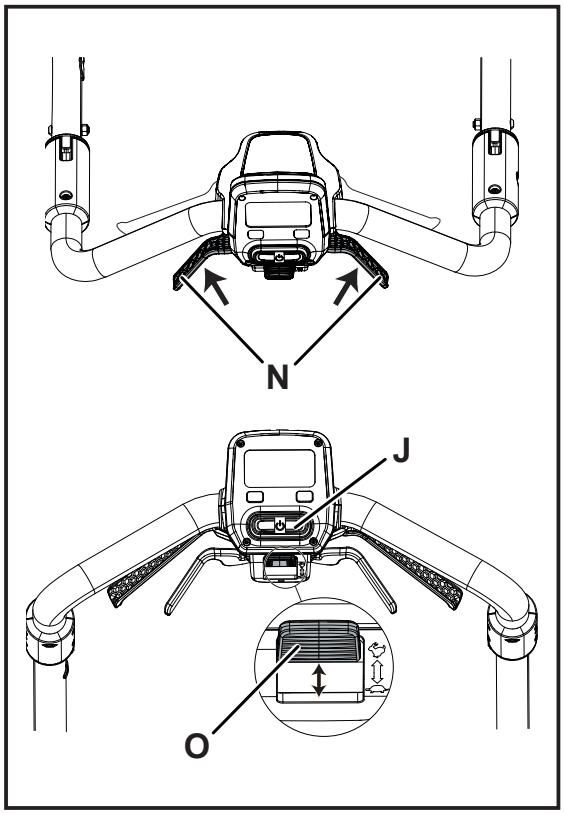

Note: The start handle and drive lever only need to be engaged on one side to operate, freeing one hand to operate other controls.

1. Start mower.
2. Push and hold either of the drive levers (N) towards the handle bar.
3. Adjust speed control for comfortable operation.
   - Slide the speed control button (O) toward rabbit symbol to increase speed.
   - Slide the speed control button (O) toward turtle symbol to decrease speed.

Release the drive levers to disengage the self-propel system.

To move the mower using the self-propel drive system without engaging the blades:

1. Press and hold the start button (J).
2. Push the drive lever (N) towards the handle bar.

© 08/2026 ECHO Incorporated

Operation on Slopes

⚠ WARNING

Mowing on slopes can cause severe personal injury. Do not mow on slopes with an incline greater than 15 degrees. If you are not comfortable, do not mow on a slope. Use lower self-propelled speed on a slope.

- Do not mow up and down face of slope, instead, mow across face of slope. Use caution when changing direction on a slope.
- Remove all obstacles such as rocks and tree limbs before mowing. While mowing lookout for holes, ruts, rocks, and other hidden objects that can cause a fall.
- Ensure that footing is stable. If loss of balance occurs, release brake-control handle immediately.
- Do not mow near drop-offs, ditches, or embankments.

Empty the Grass Catcher Bag

1. Stop the mower.
2. Remove the battery.
3. Raise rear cover.
4. Hold the grass catcher bag by its handle and unhook it from the door rod.
5. Release rear cover.
6. Empty the grass catcher bag.

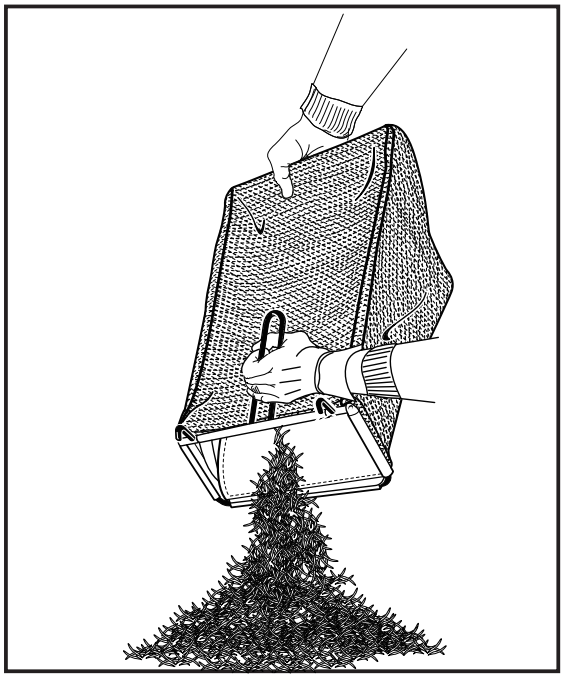

© 08/2026 ECHO Incorporated

Operation Tips

- Do not override the operation of the start button or start handles.
- Do not tilt the machine when starting.
- Keep hands and feet away from blade and other rotating parts.
- Do not stand in front of discharge chute.
- Cutting wet grass will require more power and shorten run time.

Mowing Tips

Under certain conditions, such as very tall grass, it may be necessary to raise height of the lawn mower to reduce leaving clumps of grass clippings. It may be necessary to reduce ground speed and to run lawn mower over area a second time.

- For extremely tall grass, reduce cut width by overlapping previously cut path and mow at a slower speed.
- Alternate mowing direction. This helps disperse grass clippings over lawn for even fertilization.

Mulching Tips

For best performance, keep lawn mower housing free of built-up grass. See Cleaning Lawn Mower in the Maintenance section of this Operator's Manual.

- In mulching mode, the blade will re-cut grass clippings many times, reducing them in size, so they are dispersed into lawn and will be less noticeable than full length clippings. Mulched grass will biodegrade quickly and provide nutrients for the lawn.
- Avoid cutting wet grass, which tends to form clumps and interfere with mulching action.
- For best results, adjust lawn mower cutting height so that lawn mower cuts off only top one-third of grass blades.
- If lawn is overgrown, raise cutting height to reduce overloading and leaving clumps of mulched grass.
- Certain types of grass and grass conditions may require that an area be mulched a second time to completely hide clippings. When doing a second cut, mow perpendicular to first cut path.
- Change your cutting pattern from week to week. Mow north to south one week, then east to west next week. This will help prevent matting and graining of lawn.

© 08/2026 ECHO Incorporated

MAINTENANCE

⚠ WARNING

Moving parts can amputate fingers or cause severe injuries. Keep hands, clothing and loose objects away from all openings. Always stop motor, and make sure all moving parts have come to a complete stop before removing obstructions, clearing debris, or servicing unit. Allow unit to cool before performing service. Wear gloves to protect hands from sharp edges and hot surfaces.

⚠ WARNING

Operating a poorly maintained unit can result in serious injuries to operator or bystanders. Always follow all maintenance instructions as written, otherwise serious personal injury can result.

Your unit is designed to provide years of trouble-free service. Perform regular scheduled maintenance. If you are unsure about the task, or are not equipped with the necessary tools, we recommend that you take your unit to an Authorized Service Dealer for maintenance. To help you decide whether you want to do it yourself or have the Authorized Service Dealer do it, each maintenance task has been graded. If a task is not listed, see your Authorized Service Dealer for repairs.

⚠ WARNING

Unit can operate when batteries are installed. Unexpected operation can cause serious personal injury. Always remove batteries before performing maintenance procedures.

NOTICE

- ***Do not let brake fluids, gasoline, petroleum-based materials touch the plastic parts. Chemicals can cause damage to the plastic, and make the plastic unserviceable.***
- ***Do not use strong solvents or detergents on the plastic housing or components.***

Skill Levels

Level 1 = Easy to do. Common tools may be required.

Level 2 = Moderate difficulty. Some specialized tools may be required.

Level 3 = See your Authorized Service Dealer.

© 08/2026 ECHO Incorporated

Maintenance Intervals

COMPONENT / SYSTEM	MAINTENANCE PROCEDURE	REQ'D SKILL LEVEL
Daily or Before Use		
Cleaning battery and battery compartment	Clean	**1**
Cleaning lawn mower	Clean	**1**
Blade	Inspect / Replace *	**2**
Screws / Nuts / Bolts	Inspect / Tighten / Replace *	**1**

Note: Time intervals shown are maximum. Actual use and your experience will determine the frequency of required maintenance.

* Replacement is recommended based on the finding of damage or wear during inspection.

NOTICE

If not maintained properly, the product's performance may deteriorate. Time intervals shown are maximum. Actual use and your experience will determine the frequency of required maintenance.

Maintenance and Care

Cleaning Battery and Battery Compartment

⚠ WARNING

Risk of electric shock or fire. Do not use conducting materials to clean battery or battery compartment, otherwise serious personal injury can result.

1. Open the battery door.
2. Press battery latch release and slide battery out of battery compartment.
3. Use compressed air or a soft bristle brush to remove debris from battery and battery compartment.
4. Close the battery door.

Cleaning Lawn Mower

- Keep the discharge chute clean.
- Clean the bottom of the mower deck after each use. Remove grass clippings, leaves, dirt, and other debris.

© 08/2026 ECHO Incorporated

Replacing the Blade

⚠ WARNING

- ***A blade that is bent or damaged could break apart and could cause injury or death. Inspect the blades periodically for wear or damage. Replace if needed.***
- ***Blades are very sharp. Touching them may lead to severe personal injury. Avoid touching blades whenever possible, and always wear gloves to protect hands.***
- ***Use only approved replacement blades.***
- ***Incorrect blade installation can cause severe personal injury.***

NOTICE

Apply Loctite® 242 or equivalent to bolt threads each time blade is removed and reinstalled.

1. Stop the mower.
2. Make sure that the blade fully stops.
3. Remove the battery.
4. Turn the mower on its side.
5. Use a piece of wood to prevent blade movement.
6. Remove the mounting bolt and spacer.
7. Remove the blade, fan, and base.
8. Inspect the fan, blade bolt, and base for any damage. Replace as needed.
9. Install the base, fan, new blade, spacer, and mounting bolt.

Note: Make sure the arrows on the fan engage the holes on the blade.

10. Tighten the blade bolt to 33-37 Nm.

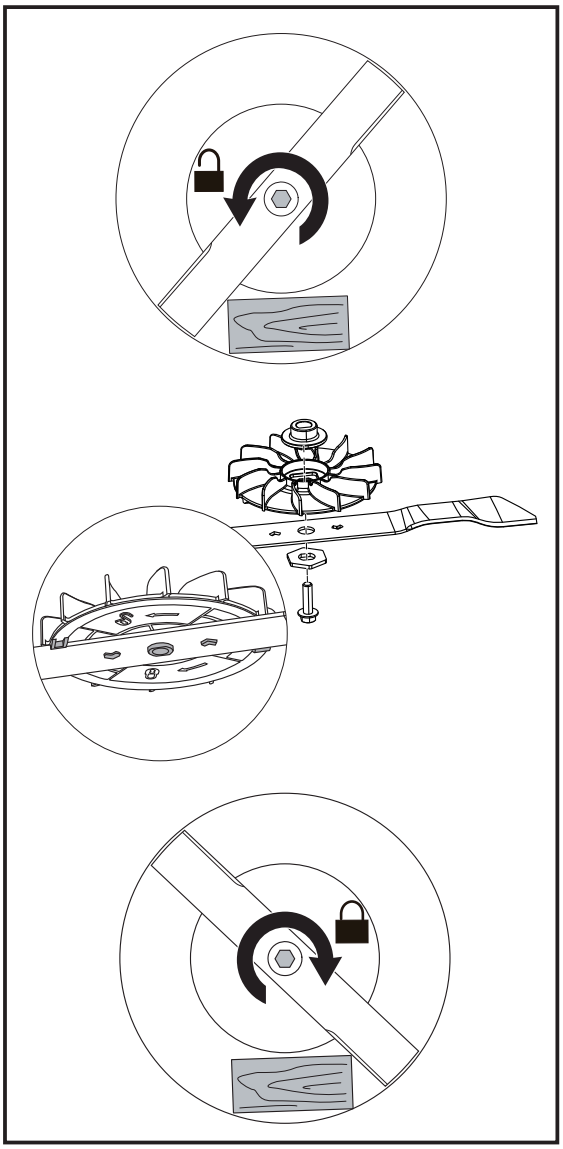

© 08/2026 ECHO Incorporated

TROUBLESHOOTING

Problem	Cause	Solution
Mower does not start.	Battery is not charged.	Charge the battery.
	Switch is defective.	Replace the switch (Contact an authorized dealer).
	Grass jammed between the deck and blade.	Remove battery; check under deck for jams.
	Battery is not fully inserted in the lawn mower.	Check the connection between the battery and the lawn mower. Make sure the battery clicks into place.
	Battery may require service or replacement.	Contact your dealer or replace battery.
Mower cuts the grass unevenly.	Lawn is rough or uneven.	Check the mowing area.
	Cutting height is not set properly.	Move the wheels to a higher setting.
	Blade is dull.	Sharpen or replace the blade.
Mower does not mulch properly.	Wet grass clippings are sticking to the underside of the deck.	Remove the battery and clean the unit. Wait until the grass dries before mowing.
	MULCH setting is not selected.	Select MULCH setting on selector.

© 08/2026 ECHO Incorporated

Problem	Cause	Solution
Mower is hard to push.	Grass is too tall, or the cutting height is too low.	Raise the cutting height.
	Rear of the grass catcher bag is dragging in thick grass.	Empty the grass clippings from the grass catcher bag.
Mower is excessively noisy and vibrates.	Motor shaft is bent.	Stop the motor, and inspect for damage. Contact your dealer for repair.
	Blade is unbalanced.	Repair before restarting. If vibration persists, contact your dealer.

© 08/2026 ECHO Incorporated

Number of Beeps	Symptom	Remedy
1	Mower will not start.	Consult Authorized ECHO Service Dealer.
2	Mower stops running.	Allow mower and battery to cool. If problem persists, consult authorized dealer.
3	Mower will not start.	Check battery and terminals for corrosion or debris. If problem persists, consult authorized dealer.
4	Mower will start then stop, or will not start.	Start mower, at first not making a full cut, then proceed to cut normally. If problem persists, consult authorized dealer.
5	Mower will not start.	Fully charge battery and try again. If problem persists, consult authorized dealer.
6	Mower will start then stop, or will not start.	Move mower to level ground and try again. If problem persists, consult authorized dealer.
7	Blade will not turn.	Remove battery, remove obstruction and try again.
8	Motor will not reach full speed.	Start mower, at first not making a full cut, then proceed to cut normally. If problem persists, consult authorized dealer.

© 08/2026 ECHO Incorporated

STORAGE

Storage After Use

When storing the product for long periods of time, ensure that the following preparations for storage are carried out.

Mower

1. Turn mower off.
2. Remove battery from mower.
3. Remove dirt and debris from exterior of unit.
4. Tighten all screws and nuts.
5. Close the battery door.
6. Store unit in a dry, dust-free place, out of the reach of children.

Battery

1. Remove battery from mower.
2. Store in a dry, dust-free place, out of the reach of children.
3. Store in temperatures consistent with ambient temperature chart.
4. Charge battery according to ambient temperature chart.

Charger

1. Remove battery from charger.
2. Disconnect charger from power supply.
3. Store in a dry, dust-free place, out of the reach of children.

© 08/2026 ECHO Incorporated

Vertical Storage

Do not store the mower without performing protective storage maintenance:

1. Remove the grass catcher bag.
2. Remove the battery.
3. Press both handle lock levers to fold the handles.
4. Lock the handles into position.
5. Stand the mower on end and make sure that the brackets touch the floor.

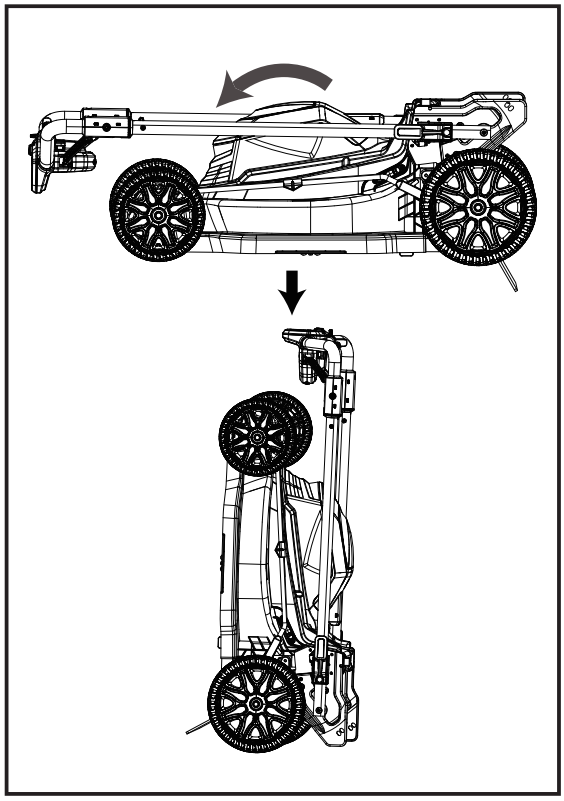

© 08/2026 ECHO Incorporated

SPECIFICATIONS

MODEL	DLM-2120SP
No-load speed	2,700 - 3,200 RPM
Height adjustments	2.5-10.2 cm (1-4 in.)
Self-propelled speed	0.6-1.5 m/s (1.34-3.36 MPH)
Functions	3-in-1 Mulch & Rear Bag & Side discharge
Weight	28.8 kg (63.49 lbs)
Battery: Model Type Voltage Charger type Charger input voltage	 ECHO eFORCE® 56V battery series batteries Li-Ion 56 (rated 50.4) CCCV 120V AC 60Hz
Charger model	ECHO eFORCE® 56V battery series charger
Charger Lights OFF Green blinking OFF Green Red OFF Red blinking OFF`	 Battery is charging Fully charged Battery is too warm: (Remove for approximately 30 minutes to allow to cool) Defective battery: (Remove and replace with new battery if this occurs)
Charge Time	See Battery Operator's Manual

© 08/2026 ECHO Incorporated

PRODUCT REGISTRATION

Thank you for choosing ECHO Power Equipment

Please go to http://www.echo-usa.com/Warranty/Register-Your-ECHO to register your new product online. It's FAST and EASY! NOTE: your information will never be sold or misused by ECHO, Incorporated.

Registering your purchase enables us to contact you in the unlikely event of a service update or product recall, and verifies your ownership for warranty consideration.

If you do not have access to the Internet, you can complete the form below and mail to:

ECHO Incorporated, Product Registration, PO Box 1139,
Lake Zurich, IL 60047.

© 08/2026 ECHO Incorporated

PRODUCT REGISTRATION CARD : TARJETA DE REGISTRO : CARTE D'ENREGISTREMENT DU PRODUIT

ONLINE OPTION: Register online and save a stamp! You will be alerted of product updates and/or be sent new ECHO product information and special offers. Simply go to: **www.echo-usa.com**

OPCIÓN POR INTERNET: ¡Registrese en la pagina web y ahorre una estampilla! Le alertaran sobre actualizaciones del producto y/o se le enviara información sobre los nuevos productos ECHO y las ofertas especiales. Simplemente visite: **www.echo-usa.com**

OPTION EN LIGNE : Enregistrer en ligne et épargner un timbre! Vous serez informé sur les nouveaux produits ECHO et les mises à jour de produit ainsi que les offres spéciales. Simplement visitez le: **www.echo-usa.com**

Please Print : Por Favor Enscriba Con Letra De Molde : En Lettre Carré S.V.P. **Confidential:** Information provided will not be shared or sold

Purchaser's Name : Nombre del Comprador : Nom de l'acheteur

Address : Dirección : Adresse

City : Ciudad : Ville | *State : Estado : Province* | *Zip Code : Código Postal : Code Postal*

E-Mail Address : Dirección De Correo Electrónico : Courrier Électronique

Phone Number : Número De Teléfono : Téléphone | *Date of Purchase : Fecha de la Compra : Date de l'achat*

Where Purchased : Nombre del Almacén donde fue Comprado : Lieu d'achat

Model Number : Numero del Modelo : No. de modéle | *Serial Number : Numero de Serie : No. de série*

Registering your purchase enables us to contact you in the unlikely event of a service update or product recall and verifies your ownership in the event of loss. : El registrar su compra nos permite estar en contacto con usted en caso de cualquier evento como el aviso de tiempo de servicio o la revocación del producto y verificación de propiedad en caso de robo o pérdida. : L'enregistrement de votre achat nous permettra de vous contacter dans le cas improbable de modifications des instructions d'entretien ou de rappel du produit et vérifier que vous êtes le propriétaire en cas de vol ou de perte.

Primary use of tool: ☐ Professional ☐ Homeowner ☐ Rental Equip.
Uso primario de la herramienta: ☐ Profesional ☐ Dueño de casa ☐ Alquiler
Usage principal : ☐ Professionnel ☐ Residential ☐ Location

Do you wish to receive periodic ECHO product information and special offers by e-mail? ☐ Yes ☐ No
¿Desea usted recibir información periódica y ofertas especiales por correo electronico sobre el producto ECHO? ☐ Yes ☐ No
Souhaitez-vous recevoir périodiquement de l'information sur les produits ECHO et les offres spéciales par courrier électronique ? ☐ Oui ☐ Non

Did you visit the ECHO website before purchasing your product?
☐ Yes ☐ No
Visitó usted la pagina web ECHO antes de comprar su producto?
☐ Sí ☐ No
Avez-vous visité le site d'ECHO avant de procurer votre produit?
☐ Oui ☐ Non

What factor(s) most influenced your purchase?
☐ Performance ☐ Price ☐ Dealer
☐ Reliability ☐ Prior Experience ☐ Quality
☐ Friend/Family ☐ Brand ☐ Warranty

¿Qué factor(es) influenció más en su compra?
☐ Funcionamiento ☐ Precio ☐ Distribuidor
☐ Confiabilidad ☐ Experiencia Anterior ☐ Calidad
☐ Amigo/Familia ☐ Marca ☐ Garantía

Quel facteur (facteurs) vous a influencé le plus?
☐ Performance ☐ Prix ☐ Marchand
☐ Fiabilité ☐ Expérience ☐ Qualité
☐ Ami/Famille ☐ Marque ☐ Garantie

ECHO INC., 400 Oakwood Rd., Lake Zurich, IL 60047
1.800.432.ECHO WWW.ECHO-USA.COM

X7572270206 02-2012

© 08/2026 ECHO Incorporated

Limited Warranty Statement for ECHO 56 Volt Handheld Products and Walk Behind Mowers sold in USA and Canada

ECHO Incorporated warrants to the original retail purchaser that this ECHO brand 56 Volt outdoor product is free from defects in material and workmanship and agrees to repair or replace, at ECHO Incorporated's discretion, any defective product free of charge within these time periods from the date of purchase:

- If the product is for homeowner use:
  - Units and Bare Tool – 5 Years
  - Battery or charger – 2 years
- If the product is for commercial use:
  - Units and Bare Tool – 2 years
  - Battery or charger – 2 year
- If the product is for rental use: 90 days for all units, batteries, and chargers.
- Cutting attachments such as, but not limited to, bars, chains, sprockets, blades, tines, belts, PowerBroom™ and nylon trimmer heads for homeowner or non-income producing use will be covered for failures due to defects in material or workmanship for a period of 60 days from original product purchase date and 30 days for commercial / rental use. Any misuse from contact with concrete, rocks, or other structures is not covered by this warranty.

This warranty extends to the original retail purchaser only and commences on the date of the original retail purchase.

Any part of this product found in the reasonable judgment of ECHO Incorporated, to be defective in material or workmanship will be repaired or replaced without charge for parts and labor by an authorized ECHO dealer. Units, repair parts and accessories replaced under this warranty are warranted only for the balance of the original warranty period.

The product, including any defective part, must be returned to an authorized ECHO dealer within the warranty period. The expense of delivering the product to the service center for warranty work and the expense of returning it back to the owner after repair or replacement will be paid by the owner. ECHO Incorporated's, responsibility in respect to claims is limited to making the required repairs or replacements and no claim of breach of warranty shall be cause for cancellation or rescission of the contract of sale of any ECHO brand 56 Volt outdoor product. Proof of purchase will be required by the dealer to substantiate any warranty claim. All warranty work must be performed by an authorized ECHO dealer.

This warranty does not cover any units, battery or charger that has been subject to misuse, neglect, negligence, or accident, or that has been operated in any way contrary to the operating instructions as specified in the Operator's Manual. This warranty does not cover normal deterioration due to the use or exposure, and any repairs made necessary by normal wear, improper

© 08/2026 ECHO Incorporated

maintenance, improper lubrication, improper storage, dirt, abrasives, impact, moisture, water, rain, snow, rust, corrosion, varnish, or other similar conditions.

This warranty does not cover damage to chargers or batteries by improper charging voltage and batteries that have been exposed to temperatures beyond those specified in the Operator's Manual, batteries that have not been properly charged or batteries that have reached their useful life.

This warranty does not apply to any damage to the product that is the result of improper maintenance or to any product that has been altered or modified. The warranty does not extend to repairs made necessary by normal wear or by the use of parts or accessories which are either incompatible with the ECHO brand 56 Volt outdoor product or adversely affect its operation, performance, or durability. In addition, this warranty does not cover wear to normal items such as, but not limited to:

Wear items – Bump Knobs, Outer Spools, Cutting Lines, Inner Reels, Felt Washers, Hitch Pins, Mulching Blades, Blower Fans, Blower and Vacuum Tubes, Vacuum Bag and Straps, Guide Bars, Saw Chains, Grass Catch Bag, Hedge Trimmer Blades, and Wheels

ECHO Incorporated, reserves the right to change or improve the design of this product without assuming any obligation to modify any product previously manufactured.

All implied warranties are limited in duration to the stated warranty period. Accordingly, any such implied warranties including merchantability, fitness for a particular purpose, or otherwise, are disclaimed in their entirety after the expiration of the appropriate five-year, two-year, one-year, 90-day, 60-day, or 30-day warranty period. ECHO Incorporated's obligation under this warranty is strictly and exclusively limited to the repair or replacement of defective parts. ECHO Incorporated, does not assume or authorize anyone to assume for them any other obligation. Some states do not allow limitations on how long an implied warranty lasts, so the above limitation may not apply to you. ECHO Incorporated, assumes no responsibility for incidental, consequential, or other damages including, but not limited to, expense of returning the product to an authorized dealer for ECHO brand 56 Volt outdoor products and expense of delivering it back to the owner, mechanic's travel time, telephone charges, rental of a like product during the time warranty service is being performed, travel, loss or damage to personal property, loss of revenue, loss of use of the product, loss of time, or inconvenience. Some states do not allow the exclusion or limitation of incidental or consequential damages, so the above limitation or exclusion may not apply to you.

This warranty gives you specific legal rights, and you may also have other rights which vary from state to state.
This warranty applies to all ECHO brand 56 Volt outdoor products manufactured by or for ECHO Incorporated, and sold in the United States and Canada.
To locate your nearest authorized ECHO dealer, visit www.ECHO-usa.com or dial 1-800-432-ECHO (3246).

© 08/2026 ECHO Incorporated

NOTES

© 08/2026 ECHO Incorporated

NOTES

© 08/2026 ECHO Incorporated

472LMS000001 - 472LMS999999

ECHO INCORPORATED
400 Oakwood Road
Lake Zurich, IL 60047
www.echo-usa.com