DELLA®

Adjustable Ground Stand

Instruction Manual

Warning and Safety

- Read this guide before installation. Failure to follow the safety instructions may result in property damage or serious injury.
- Please Keep this manual.

⚠ Warning

- Do not alter, change, or modify this product. Modification might result in weaken structural stretch of the rack and lead to failure.
- Make sure all the bolts and nuts are tighten and the rack is firmly attached to the wall before use.
- Be caution of sharp edges of the rack.
- This rack is only designed to be used for mounting mini split AC outdoor unit. Do not use it for other purposes.
- Do not climb on the rack.

Package Content

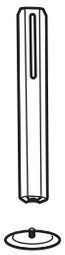

Leg
4x



Horizontal Frame
2x



Main Frame
1x



M8 x 30 Bolt
4x



M8 x 16 Bolt
4x



Washer
20x



M8 Nut
8x



M8 Nut Cap
8x



Dampening Pad
4x



Mounting Nut
4x

Installation Preview

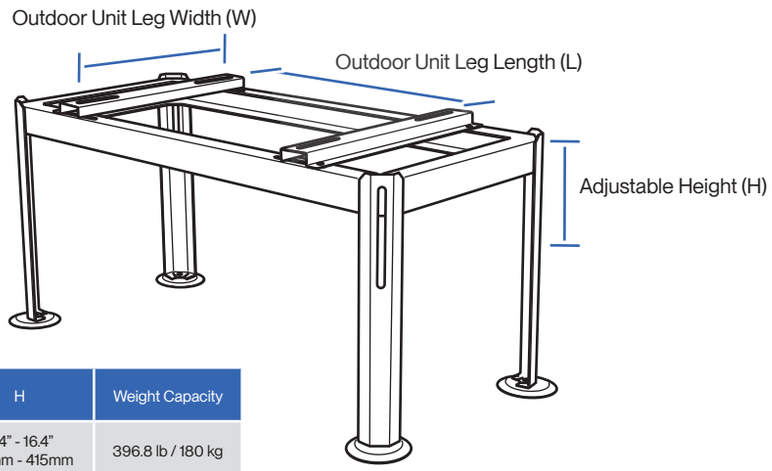

	L	W	H	Weight Capacity
048-S-1	8.66" - 29.13" 220mm - 740mm	7.08" - 13.77" 180mm - 350mm	8.4" - 16.4" 215mm - 415mm	396.8 lb / 180 kg
048-S-2	12.99" - 32.67" 330mm - 830mm	13.38" - 19.29" 340mm - 490mm	8.4" - 16.4" 215mm - 415mm	440.9 lb / 200kg

Installation Instruction

Tools Needed (Not included)

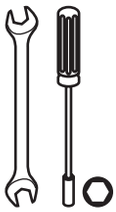

Hex Nut Driver / Wrench

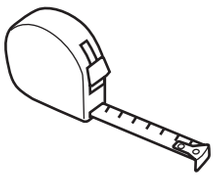

Measuring Tape



Spirit Level

01

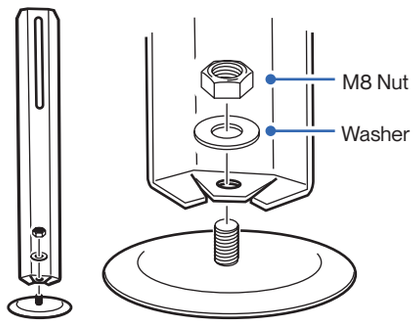

- Assemble the legs

02

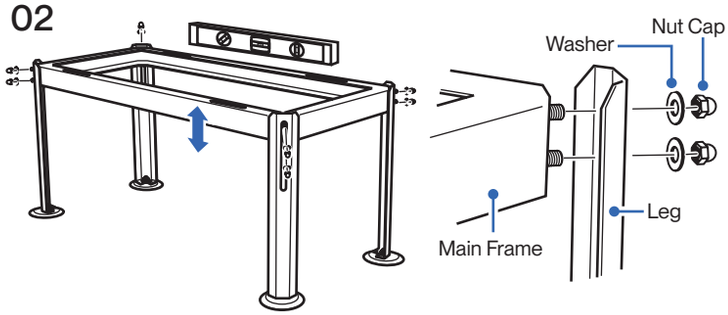

- Assemble the legs to the main frame. Adjust the height of the stand to your liking and make sure the stand is leveled.

03

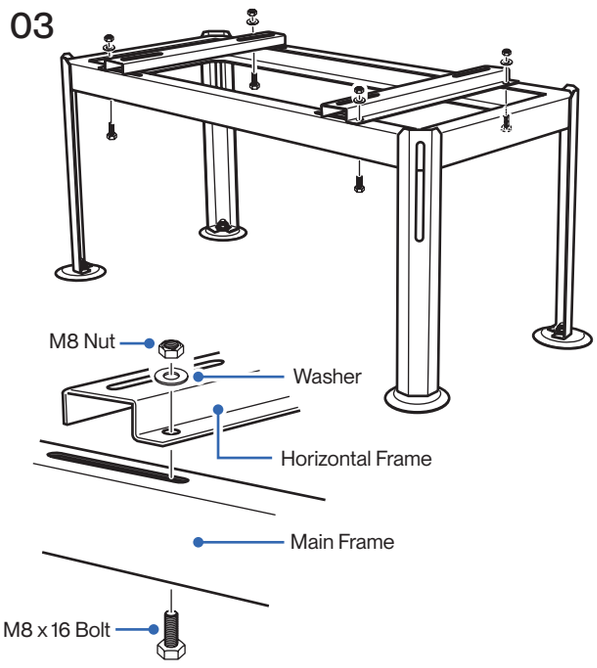

- Attach the horizontal frames onto the main frame.

04

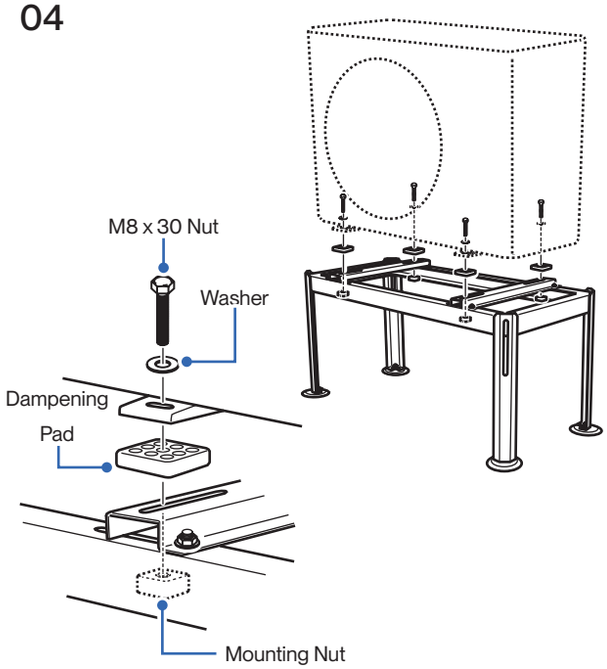

- Mount the mini split outdoor unit on to the rack.

© Della All rights reserved.

www.dellahome.com
support@dellahome.com
800-863-4143
6:00 a.m. – 4:00 p.m. PST Monday – Friday

The design and specifications are subject to change without prior notice for product improvement. Any updates to the manual will be uploaded to the della website.