DELLA®

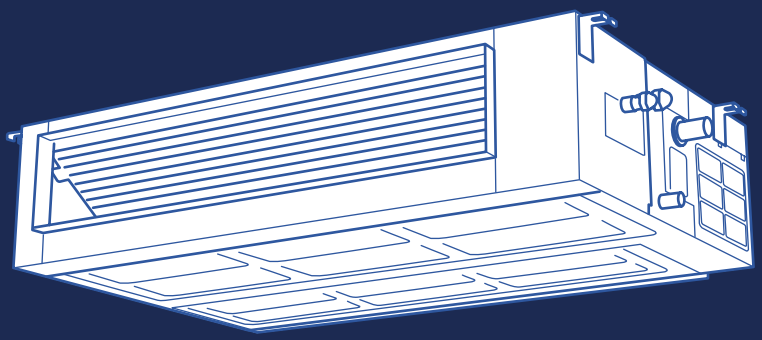

Concealed Duct Series

Instruction Manual
Installation and Operation Guide

Watch video
before Installation

Welcome to DELLA®

5 Things to know before installation

Thank You for trusting Della as your home comfort solution. We know no better how exicting it must be to have a new and functional AC to make your living space more comfortable. But AC installation, in reality, is far from being simple. Here are a few things you must know before installing the AC whether by yourself or by a professional HVAC technician. This will give you an idea of what to look out for installing an AC so that it can perform at its maximum efficiency and every dollar you invest in it pays off.

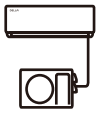

The installation location is critical

Not all places are created equal. Only proper placement of the AC will maximize efficency while balancing the interior aesthetic. You need to make sure to get the placement and location right the first time.

Page 14



Handle the refrigerant pipes perfectly

The refrigerant pipe is one of the most important, if not the most important, parts of the mini split AC system. So, be sure to understand what the entire process entails. You might need special-purpose tools to shorten and bend the pipe. Purchaseing lengthening pipes to match your connection might also be necessary. Any flow in the handling of the refrigerant pipes may cause a refrigerant leak or reduced efficiency. The cost to repair or re-install the refrigerant pipe can quickly frustrate and upset any DIYer, especially when trying to save money by not hiring a professional. Additional refrigerant might also be needed if you used lengthening pipes or find any leaks during your install. Further more, it's always a good idea to test for any refrigerant leaks after completing your installation by using soapy spray or professional detector tools. Please contact us if you need extra refrigerant.

Page 25



Arrange and insulate the line set correctly

The line set contains the refrigerant pipes, drain hose, and electrical wires. A good arrangment and insulation prevent water condensation and protects it from extermal elements, as well as matching the exact distance of the installation. No one wants extra line set dangling around.

Page 22, 28



Vacuum pumping the refrigerant circuit

AC absolutely needs vacuum pumping in order to perform efficently and prevent refrigerant from reacting with air moisture and damaing the internal parts of the machine. With a vacuum pump and a micron gauge, the process does not take very long, but it is important to do it right.

Page 36



Safe electrical connection

A safe and properly electrical connection is crucial necessity for the installation. The voltage, power breaker protection, cable requirement and wiring must correspond to the specifications of each model. A poor connection can quickly becomes a fire hazard.

Page 23, 33

QUICK TIPS

Most of the problems emerge from incorrect or poor installation. Installation performed by professional HVAC technician can greatly reduce the chance of having problems for years to come. On top of that, Della provide extended warranty for professional installation. If you need assistance or have questions, we are here for you.

support.dellahome.com

800-863-4143
6:00 a.m. - 4:00 p.m. PST
Monday - Friday

24/7 Live Chat

Table of Content

Before Installation

Warning and Safety 04
Name of Parts 09
Product Specification 11

Installation

Installation Preview 12
Installation Info 13
Indoor Unit Installation 15
Outdoor Unit Installation 29
Circuit Diagram 34
Vacuum Pumping 36
Thermostat Installation 40
Check List 44
Test Run 45

Before Using

Operation Tips 46

Remote Control

Basic Operation

Power ON / OFF 52
Operation Modes 52
- Auto, Cool, Heat, Dry, Fan 52
Change Temperature 53
Change Fan Speed 53

Advance Function

Turbo Mode 54
Quiet Mode 54
Eco Mode 55
Sleep Mode 55
Timer 56
Vicinity Sensor 57
Self Cleaning 58
Child Lock 58
°F / °C 59
Force Defrost 59

Thermostat

Basic Operation

Power ON / OFF 62
Operation Modes 62
- Auto, Cool, Heat, Dry, Fan 62
Change Temperature 62
Change Fan Speed 62

Advance Function

Sleep Mode 63
Eco Mode 63
Self Cleaning 63
8 Degree Heating 64
Child Lock 64
Parameter Setting 65
Timer Setting 66
Real Time Timer 69
Wi-fi Reset 69

Other Function

Wi-fi Set Up 72
Refrigerant Sensor 73
Operation Temperature 74

Care and Maintenance

Air Filter 75
Maintenance Routine 76

Having Problems?

Troubleshooting 77
Disposal Guideline 83
Warranty 84

Warning and Safety

- Read this guide before installation. Failure to follow the safety instructions may result in property damage, serious injury, or death.
- Please Keep this manual.

DANGER

Danger:
Indicates an IMMINENTLY hazardous situation that, if not avoided, will result in death, serious injury, or serious property damage.

WARNING

Warning:
Indicates an POTENTIALLY hazardous situation that, if not avoided, will result in death, serious injury, or serious property damage.

CAUTION

Caution:
Indicates an POTENTIALLY hazardous situation that, if not avoided, will result in minor to moderate injury. It may also be used to indicate unsafe practice.

Attention:
Pay additional attention to the instruction.

DO NOT:
Indicates prohibited actions and / or practice.

About Refrigerant

DANGER

- The air conditioner is pre-charged with refrigerant. Handle the air conditioner with care and check if there is any refrigerant leakage during installation. Refrigerants have no odor and can be toxic and flammable. Rapid evaporation of refrigerant may cause frostbite, cardiac arrhythmia, and / or irritation, as well as cause environmental damage.
- In the case of refrigerant leakage, shut down the appliance and disconnect from the power supply. An inspection must be performed by a qualified technician.

Additional Information About R454B Refrigerant

WARNING

- In UL/CSA 60335-2-40, R454B refrigerant is classified as class A2L, which is mildly flammable. Therefore, R454B refrigerant is suitable for system needing additional refrigerant charge and which will limit the area of the rooms being served by the system. Similarly, the total amount of refrigerant in the system shall be less than or equal to the allowable maximum refrigerant charge. The allowable maximum refrigerant charge depends on the area of the rooms being served by the system.
- For R454B refrigerant, the maximum charge in a room shall be in accordance with the following:
  - $M_{max} = SF \times LFL \times h_0 \times A$
- or the minimum floor area A_{min} to install an appliance with refrigerange M_c (kg) shall be in accordance with:
  - $A_{min} = M_c / (SF \times LFL \times h_0)$
- M = Mass
- M_{max} = Maximum charge mass
- M_c = Mass charged
- A = Floor area
- LFL = Lower Flammable Limit, for R454B LFL is 0.296 kg / m^3

Warning and Safety

Additional Information About R454B Refrigerant

WARNING

- The minimum opening area for connected rooms. M_c = 1.73kg as an example.

A (m²)	Mc (kg)	Mmax (kg)	Anvmin (m²)
4	1.73	1.48	0.0058
7	1.73	2.59	0.0000
10	1.73	3.70	0.0000
15	1.73	5.55	0.0000
20	1.73	7.4	0.0000
30	1.73	11.1	0.0000

- When the unit detects a refrigerant leak, the minimum airflow of the indoor unit is as follows:

Model	Minimum Airflow		Model	Minimum Airflow	
9K	65 CFM	110 m³/h	18K	224 CFM	380 m³/h
12K	135 CFM	230 m³/h	23K	265 CFM	450 m³/h

- Maximum Charge (kg)

Refrigerant	LFL (kg/m³)	h₀ (m)	Floor Area (m²)						
			4	7	10	15	20	25	30
R454B	0.296	1.8	1.10	1.90	2.70	3.80	4.40	4.90	5.40
		2.5	1.48	2.59	3.70	5.55	7.40	9.25	11.10
		2.8	1.66	2.90	4.14	6.22	8.29	10.36	12.43

- Minimum Room Area (m²)

Refrigerant	LFL (kg/m³)	h₀ (m)	Charge Amount (M)						
			0.8 kg	1 kg	1.2 kg	1.4 kg	1.6 kg	1.8 kg	2.0 kg
R454B	0.296	1.8	3.00	3.75	4.50	5.26	6.01	6.76	7.51
		2.5	2.16	2.70	3.24	3.78	4.32	4.86	5.41
		2.8	1.93	2.41	2.90	3.38	3.86	4.34	4.83

- The total refrigerant charge should be calculated by adding the precharge amount and additional amount.

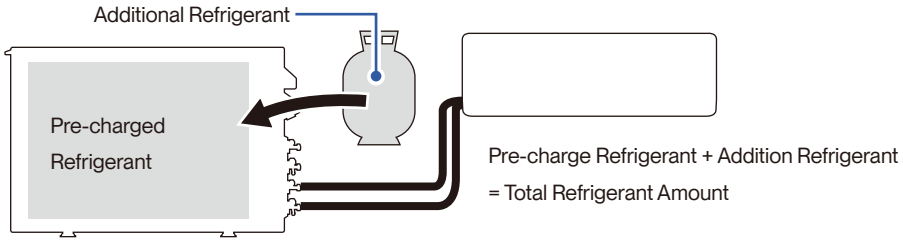

Warning and Safety

Additional Information About R454B Refrigerant



- When Installing or using the appliance with R454B refrigerant, beware of the following symbols.
  - This symbol means this appliance uses a flammable refirgerant.
    If the refrigerant is leaded and exposed to an external ignition source, there is a rist of fire.
  - This symbol means that read the operation insturction carefully.
  - This symbol means that personnel handling the equipment should reference to the installation manual.
  - This symbol means information is available in the installation or operation instruction manual.
- Prior to any work on systems containing flammable refrigerants, always check the area to ensure that the risk of ignition is minimized. All possible ignition sources, such as cigarette, should be kept sifficiently far away from the site of installation, repairing, removing, and disposal during which refrigerant can possibly be released to the surrounding space. Prior to work taking place, the area around the equipment should be surveyed to make sure that there are no flammable hazards or ignition risk. "No smoking" sign shall be displayed.
- Installation or maintenance of refrigerant system shall be taken under a controlled procedure to minimize the risk of flammable gas or vapor being present while the work is being performed.
- All working personnal and others around the working area shall be instructed on the nature of work being carried out. Work in confined spaces shall be avoided. The area around the workspace shall be sectioned off, and ensure that the conditions within the area have been made safe.
- The area shall be checked with an appropriate refrigerant detector prior to and during work to ensure the technician is aware of potentially flammable atmospheres.
- If any hot work is to be conducted on the refrigeration equipment or any associated parts, appropriate fire extinguishing equipment shall be available to hand.
- Ensure that the area is in the open or it is adequately ventilated before breaking into the system or conducting any work that will product heat. A degree of ventilation shall continue during the period that the work is carried out.
- The folliwing checks shall be applied to installations using flammable refrigerants:
  - The refrigerant charge amount is in accordance with the room size within which the refrigerant containing parts are installed.
  - The ventilation machinery and outlet are operating adequately and are not obstructed.
  - If an indirect refrigerating curcuit is being used, the secondary circuit shall be check for the presence of refrigerant.
  - Refrigerant pipe or components are installed in a position where they are unlilely to be exposed to any substance which may corrode refrigerant containing components, unless the components are constructed of materials which are inherently resistant to being corroded or are suitable protected against being corroded.
- Detection of flammable refrigerants:
  - Under no circumstances shall potential sources of ignition be used in the searching for or detection of refrigerant leaks. A halide torch or any other detector using naked flame shall not be used.
  - Electronic leak detectors shall be used to detect flammable refrigerant. Ensure that the detector is not a potential source of ignition and is suitable for the refrigerant used.
  - Leak detection equipment shall be calibrated to the refrigerant employed and the appropriate percentage of gas (25% maximum) is confirmed.
  - Leak detection fluids are suitable for use with most refrigerants, but the use of detergents containing chlorine shall be avoided as chlorine may react with the refrigerant and corrode the pipe work.
  - If a leak is suspected, all open flame shall be removed or extinguished.
  - If a leakage of refrigerant found which requires brazing, all of the refrigerant shall be recovered from the system, or isolated (by means of shut off valves) in a part of the system remote from the leak.
  - Oxygen free nitogen shall be purged through the system both before and during the brazing process.

Warning and Safety

About Installation



- Do not install or store this appliance in a room with continuously operating ignition sources such as open flames, gas appliances, or electric heater.
- Do not install the appliance within 20" / 50cm of flammable substances such as alcohol, etc. Or pressurized containers such as spray cans.
- Do not alter, change, or modify the appliance.
- Do not reuse existing refrigerant line sets when replacing or upgrading an air conditioning system that uses a different refrigerant type. Different refrigerants may have different chemical properties, lubricants and operate in different pressures, do not assume the existing line set to be compatible.



- The room for the installation, use, repair, and / or storage of this air conditioner should be greater than 54 sq ft / 5m².
- Stop valve cover must be installed on the air conditioner to prevent possible refrigerant leak.
- Refrigerant leakage or damaged pipelines must be inspected and repaired by a qualified HVAC technician.
- The installation of refrigerant pipe work shall be kept to a minimum length.
- The appliance must be installed in accordance with applicable federal, state, and local regulations.



- Prevent children from accessing the work area during installation to prevent unforeseeable accident.
- The base of the outdoor unit must be firmly fixed.
- Carry out a test run after the installation.
- Installation of a mini split AC requires specialized training and equipment. Hire a licensed professional if not familiar with electrical wiring and HVAC system.
- The packaging materials are recyclable and should be disposed of in a separate waste bins.
- The appliance should not be installed in a location where the air outlet of the indoor or outdoor unit is obstructed. Obstruction of these opening may cause damage or malfunctions to the appliance.

About Power and Electricity



- Ensure that the power voltage corresponds to that stamped on the rating plate.
- A fuse or overload protection device with a suitable capacity for indoor unit must be installed.
- The appliance must be fitted with means for disconnection from the main power supply under over-voltage category III conditions. All electrical wiring must follow federal, state, or local regulations.
- When working on the electric terminals, ensure the appliance is disconnected from the power supply.
- Make sure the appliance is properly grounded to prevent electric shock.



- Do not bend, tug, or compress the power cord during installation to prevent damaging the power cord. Damaged electrical cord should be replaced by a qualified electrician.
- Do not use power extensions and / or multi-socket modules for appliance installation.

About Vacuum Pumping



- All refrigerant lines must be evacuated with an appropriate vacuum pump to remove air and moisture prior to opening the service valves. Failure to do so may result in system failure, or permanant damage to the appliance and void the warranty coverage.
- The use of purge kits, canned nitrogen, or refrigerant flushing devices is not an acceptable substitute for proper evacuation.

Warning and Safety

About Operation



- Do not disconnect the appliance from the power supply before shutting off the appliance. This might create a spark and potentially cause a fire.
- Do not place flammable substances near the appliance.
- Do not climb onto or place any objects on the appliance.
- Do not insert any objects into the appliance to prevent damage or injury.
- Do not obstruct the air inlet or outlet.
- Do not operate the appliance with wet hands.



- If the appliance is used in areas without the possibility of ventilation, precautions must be taken to prevent any leaks of refrigerant.
- Only use the appliance as instructed in this booklet. These instructions are not intended to cover every possible condition and situation. As with any electrical household appliance, common sense and caution are therefore always recommended for usage and maintenance.
- This appliance is designed and made for air conditioning in domestic environments only. It must not be used for any other purpose such as drying clothes or cooling foods.
- This appliance can be used by children 8 years old or above and persons with reduced physical, sensory, or mental capabilities, or lack of experience and knowledge if they have been given supervision or instruction concerning the use of the appliance in a safe way and understand the hazards involved.
- Children shall not play with the appliance.

Encountering Troubles



- In the case of the appliance emitting smoke, burning smell, leaking water, or making unusual noise, shut down the appliance and disconnect from the power supply immediately. Contact a qualified technician for inspection and repair.

About Handling and Maintenance



- Do not attempt to disassemble, alter, or modify the appliance.
- Do not flush the air conditioner with water.
- Do not attempt to repair, relocate, modify or reinstall the air conditioner by yourself. Incorrect work could cause electric shocks, fire or damage. Contact a qualified technician.



- Before cleaning the unit, the appliance must by shut down and disconnect from the power supply for at least 5 minutes.

Name of Parts

Indoor Unit

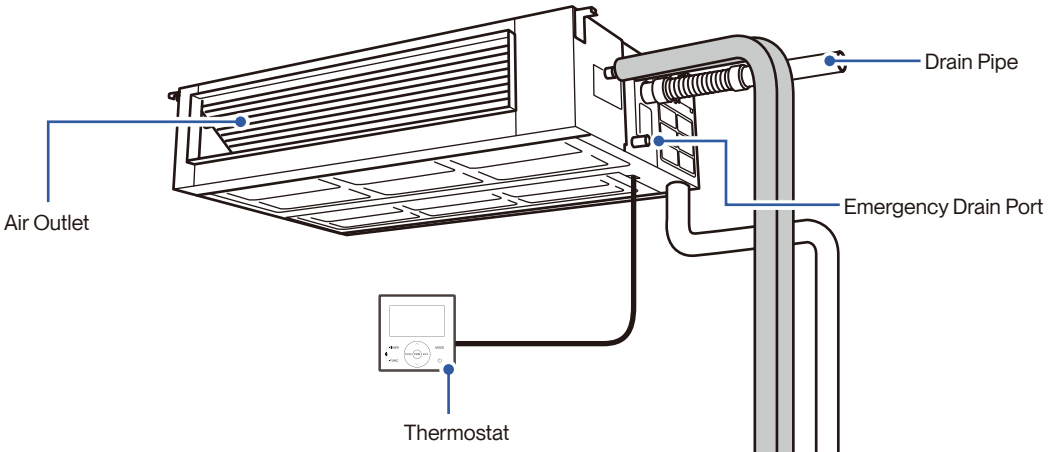

Outdoor Unit

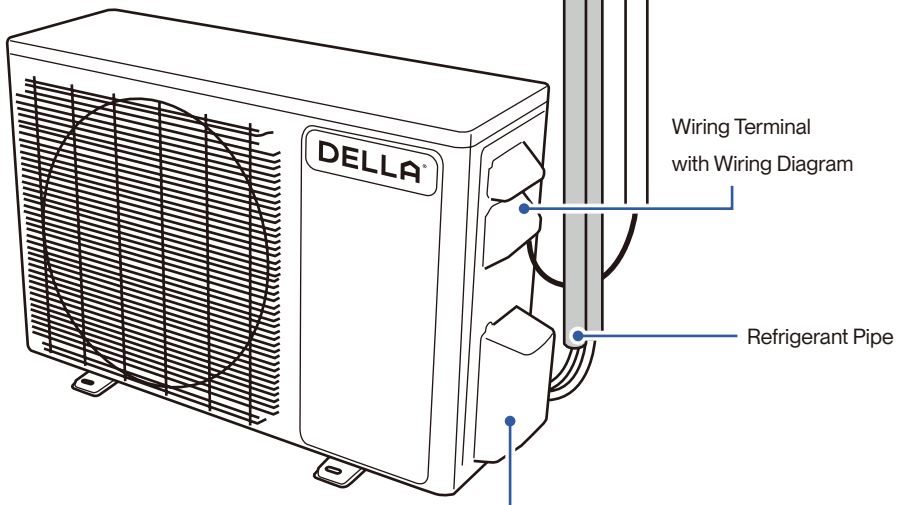

Valve Cover

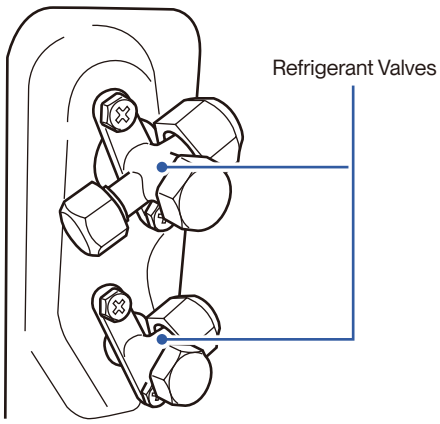

Name of Parts

Included Accessories

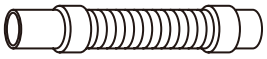

Flexible Drain Hose
1x



Hose Clamp
1x



Rubber Foot Pad
4x



Communication Cable
1x

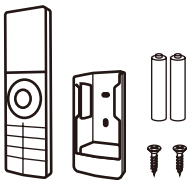

Remote Control, Holder 1x
Battery 2x

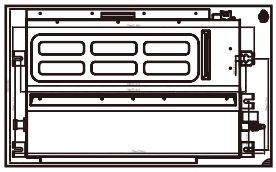

Installation Template
1x

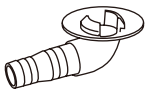

Drainage Joint
1x

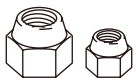

Brass Nut Set
2x

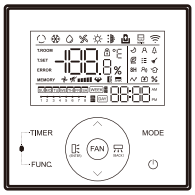

Thermostat
1x

Tools Needed (Not included)

- Screw Driver
- Hole Saw Ø2.75" / Ø70mm
- Refrigerant Leak Detector / Liquid Leak Detector
- Allen Wrench
- Spanner
- Torque Wrench
- Measuring Tape
- Spirit Level
- Stud Finder
- Thermometer
- Vacuum Pump
- Dry Wall Anchors / Molly Bolts
- Wood Screws
- Floor Mounting Base Kit / Wall Mount Kit
- Power Supply Cable
- Micron Gauge / AC manifold Gauge
- Copper Pipe Bender / Spring Bender
- Caulk
- Tubing Cutter*
- Pipe Reamer*
- Tubing Flaring Tool*
- Wire cutter*

NOTE: Tools marked with * are needed for shortening the refrigerant pipe and / or electrical wire to the exact desired length.
ONLY a qualified HVAC technician should attempt altering the pipe length and / or the wire length.

			048-DC-9K2V	048-DC-12K2V	048-DC-18K2V	048-DC-24K2V
Power Supply			208 V - 230 V / 60 Hz / 1P	208 V - 230 V / 60 Hz / 1P	208 V - 230 V / 60 Hz / 1P	208 V - 230 V / 60 Hz / 1P
Rated Cooling Capacity (Btu / h)			9500	11000	17000	22000
Rated Heating Capacity (Btu / h)			9500	12000	18000	25000
Cooling	Power Consumption		750 W	940 W	1450 W	1870 W
	Rated Current		3.2 A	4.1 A	6.3 A	8.1 A
Heating	Power Consumption		800 W	1030 W	1805 W	2030 W
	Rated Current		3.5 A	4.5 A	7.8 A	8.8 A
Noise Level		Indoor Unit	28 - 42 dBA	32 - 44 dBA	33 - 48 dBA	34 - 51 dBA
		Outdoor Unit	54 dBA	56 dBA	59 dBA	61 dBA
Dimension		Indoor Unit	27.5" x 19.25" x 7.88" 700 mm x 490 mm x 200 mm	27.5" x 19.25" x 7.88" 700 mm x 490 mm x 200 mm	35.38" x 19.25" x 7.88" 900 mm x 490 mm x 200 mm	43.25" x 17.75" x 7.88" 1100 mm x 490 mm x 200 mm
		Outdoor Unit	31.88" x 12.00" x 21.61" 810 mm x 305 mm x 549 mm	31.88" x 12.00" x 21.61" 810 mm x 305 mm x 549 mm	36.49" x 14.96" x 27.51" 927 mm x 380 mm x 699 mm	38.50" x 16.57" x 31.61" 978 mm x 421 mm x 803 mm
Net Weight		Indoor Unit	33.1 lb / 15 kg	33.1 lb / 15 kg	39.7 lb / 18 kg	50.7 lb / 23 kg
		Outdoor Unit	52.7 lb / 23.9 kg	65 lb / 29.5 kg	90.4 lb / 41 kg	104.7 lb / 47.5 kg
Suitable Area			Up to 400 sq. ft	Up to 550 sq. ft	Up to 1000 sq. ft	Up to 1500 sq. ft
Moisture Removal (per hour)			2.3 pints / 1.1 L	3.3 pints / 1.6 L	4.6 pints / 2.2 L	5.5 pints / 2.6 L
Refrigerant			R454B	R454B	R454B	R454B

Installation Preview

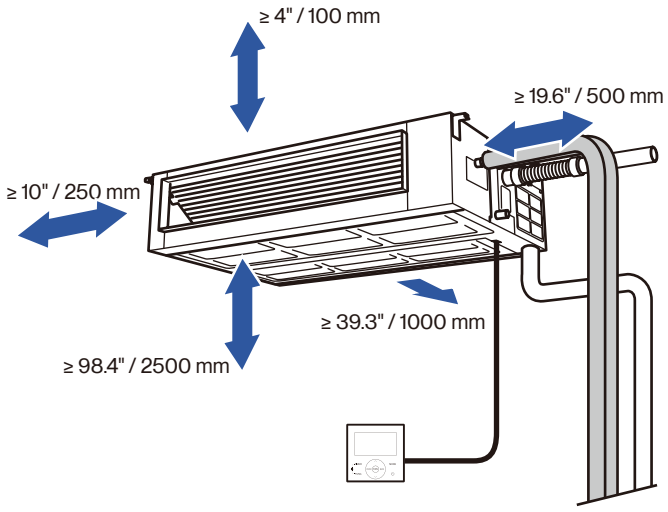

	9K2V	12K2V
Standard Length	16.4 ft / 5 m	
Max. Distance	49 ft / 15 m	
Max. Elevation	33 ft / 10 m	

	18K2V	24K2V
Standard Length	16.4 ft / 5 m	
Max. Distance	65 ft / 20 m	
Max. Elevation	49 ft / 15 m	

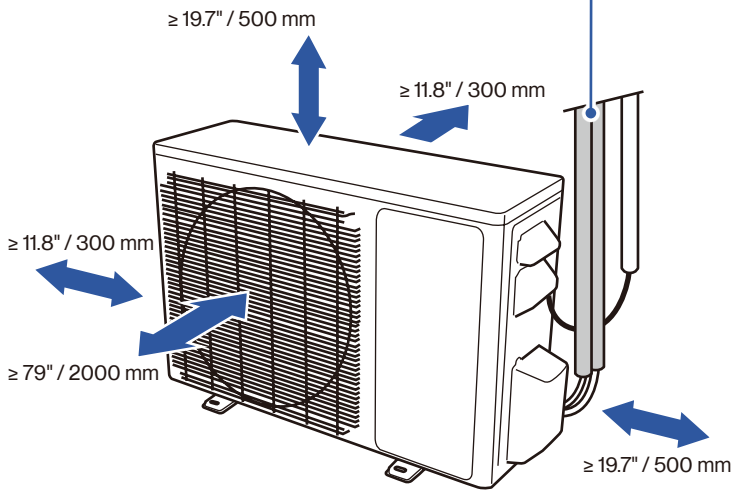

1. Choose the installation location
   Page 14
2. Ceiling hole, refrigerant pipe, drain hose, and electrical cable preparation
   Page 17
3. Install hanging rod
   Page 18
4. Hanging the indoor unit
   Page 19
5. Connect air duct to the indoor unit
   Page 20
6. Indoor unit connection
   - Connect the drain hose to the indoor unit
     Page 22
   - Pass the electrical wire into the indoor unit
     Page 23
   - Connect the refrigerant pipe to the indoor unit
     Page 27
7. Placing the outdoor unit
   Page 29
8. Connection between indoor and outdoor unit
   - Connect the refrigerant pipes
     Page 32
   - Connect the electrical wires
     Page 33
9. Vacuum Pumping
   Page 36
10. Installing Thermostat
    Page 40
11. Check List
    Page 44
12. Test Run
    Page 45

Power Supply and Breaker Size

		048-DC-9K2V	048-DC-12K2V	048-DC-18K2V	048-DC-24K2V
Power Supply		203 V ~ 230 V / 60 Hz / 1P	203 V ~ 230 V / 60 Hz / 1P	203 V ~ 230 V / 60 Hz / 1P	208 V ~ 230 V / 60 Hz / 1P
Cooling	Power Consumption	750 W	940 W	1450 W	1870 W
	Rated Current	3.2 A	4.1 A	6.3 A	8.1 A
Heating	Power Consumption	800 W	1030 W	1805 W	2030 W
	Rated Current	3.5 A	4.5 A	7.8 A	8.8 A
Min. Circuit Ampacity		10 A	11 A	12 A	17 A
Min. Wire Size (American Wire Gauge)		16 AWG	16 AWG	12 AWG	12 AWG
Breaker Size		15 A	15 A	20 A	25 A

Refrigerant and Pipe Set Info

		048-DC-9K2V	048-DC-12K2V	048-DC-18K2V	048-DC-24K2V
Stand Length		16.4 ft / 5 m	16.4 ft / 5 m	16.4 ft / 5 m	16.4 ft / 5 m
Max. Distance Between Indoor and Outdoor Unit		49 ft / 15 m	49 ft / 15 m	65 ft / 20 m	65 ft / 20 m
Max. Elevation Between Indoor and Outdoor Unit		33 ft / 10 m	33 ft / 10 m	49 ft / 15 m	49 ft / 15 m
Type of Refrigerant		R454B	R454B	R454B	R454B
Factory Refrigerant Pre-charge for up to 25 ft pipe		25 oz / 710 g	35.27 oz / 1000 g	45.50 oz / 1290 g	55.03 oz / 1560 g
Additional Refrigerant Charge		0.11 oz / ft (10 g / m)	0.11 oz / ft (10 g / m)	0.11 oz / ft (10 g / m)	0.11 oz / ft (10 g / m)
Max. Refrigerant Charge		27.69 oz / 785 g	37.92 oz / 1075 g	48.15 oz / 1365 g	57.67 / 1635 g
Liquid Line	Pipe Diameter	1/4”	1/4”	1/4”	1/4”
	Torque Parameter	18 - 20 N-M / 13.3 - 14.8 lbf-ft / 1.8 - 2.0 kgf-m	18 - 20 N-M / 13.3 - 14.8 lbf-ft / 1.8 - 2.0 kgf-m	18 - 20 N-M / 13.3 - 14.8 lbf-ft / 1.8 - 2.0 kgf-m	18 - 20 N-M / 13.3 - 14.8 lbf-ft / 1.8 - 2.0 kgf-m
Gas Line	Pipe Diameter	3/8”	3/8”	1/2”	5/8”
	Torque Parameter	30 - 35 N-M / 22.1 - 25.8 lbf-ft / 3.0 - 3.6 kgf-m	30 - 35 N-M / 22.1 - 25.8 lbf-ft / 3.0 - 3.6 kgf-m	45 - 50 N-M / 33.2 - 36.9 lbf-ft / 4.6 - 5.1 kgf-m	60 - 65 N-M / 44.3 - 48.0 lbf-ft / 6.1 - 6.6 kgf-m

Installation Info

Picking a Installation Location for the Indoor Unit

- Ensure the installation complies with the minimum clearance space surrounding the unit and is within the maximum piping length and maximum elevation defined in the installation information.

  Page 13
- Make sure the ceiling / structure is strong enough to hold the weight of the indoor unit and prevent it from vibration.
- Make sure the air inlet and outlet are clear of any obstruction.
- Make sure condensation can be easily drained.
- A place where all connections can be easily made to the outdoor unit.
- A place where the indoor unit is out of children's reach.
- A place where the indoor unit is accessible for maintenance.
- Install the indoor unit 10 ft / 3 m away from TV or radio appliances.

  NOTE: Radio interference may occur if appliances are placed too close to each other.
- Do not install in a laundry room or by a swimming pool.
- There should not be any heat source near the indoor unit.
- Do not install the indoor unit near the doorway.

  (!) To prevent the indoor unit from falling down and blocking exit way in case of an emergency such as fire or earthquake etc.
- Do not install the indoor unit where causticgas exist in the air.

  (!) To prevent copper alloy, or aluminum panels in the indoor unit from corrosion.
- Do not install the indoor unit in area with strong electreomagnetic wave.

Picking a Installation Location for the Outdoor Unit

- Do not install the outdoor unit near a heat source, steam, or flammable gas.
- Do not install the outdoor unit in windy or dusty locations.
- Do not install the outdoor unit in places where people often pass.
- Avoid installing the outdoor unit in places where it will be exposed to direct sunlight.

  NOTE: If necessary, build a protection that does not interfere with the airflow.
- Make sure there is enough space around the outdoor unit to circulate air.

  Page 12
- Outdoor unit must be placed in a safe and solid location.
- The outdoor unit should ideally be placed on a elevated concrete pad.
- If installing in snowy region, it is recommended the outdoor unit to be installed above the seasonal snow level.

Indoor Unit Installation

Indoor Unit Dimension

048-DC-9K2V-IN
048-DC-12K2V-IN
048-DC-18K2V-IN

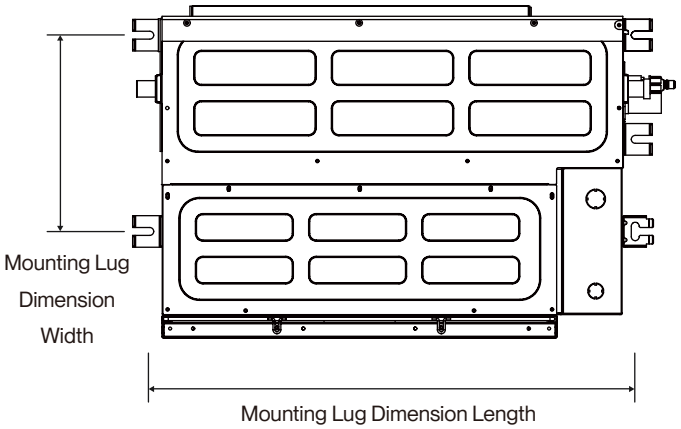

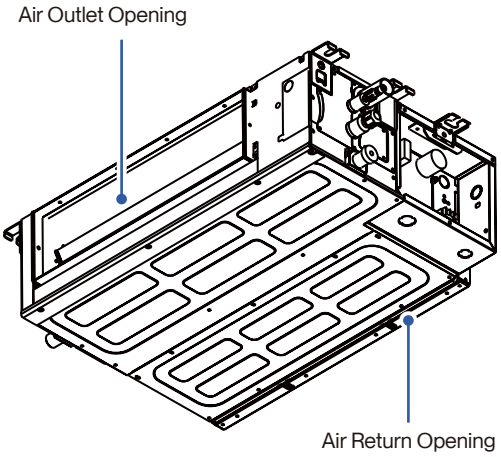

048-DC-24K2V-IN

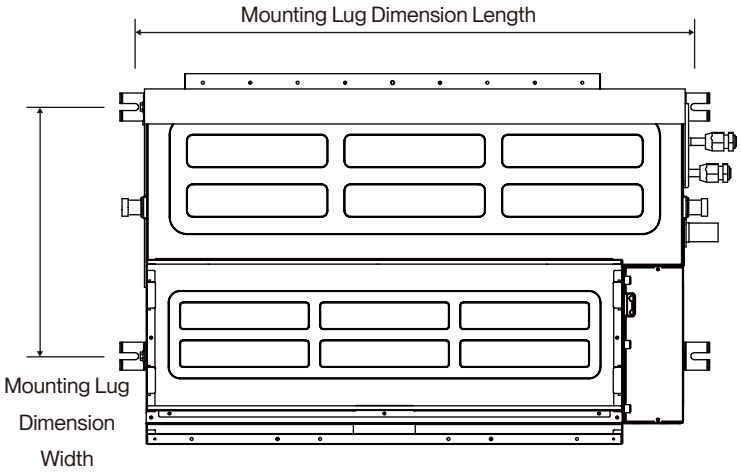

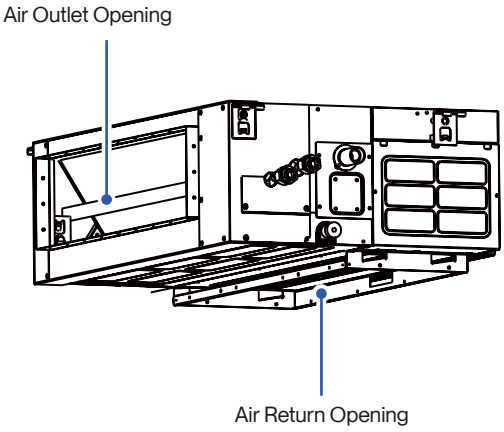

	Mounting Lug Dimension		Air Outlet Opening		Air Return Opening	
	Length	Width	Length	Width	Length	Width
9 - 12K	738	298	510	140	600	187
18K	958	298	730	140	820	187
24K	1138	365	930	140	1030	183

Unit in millimeter (mm)

Indoor Unit Installation

Deciding Air Return Position

The indoor unit is fitted with the air return at the bottom position.

Swap the air return and cover plate position to change the air return to the back position.

1. Remove the air return filter and the back cover from the indoor unit.
2. Re-install the cover to the bottom of the indoor unit and the air return filter to the back.

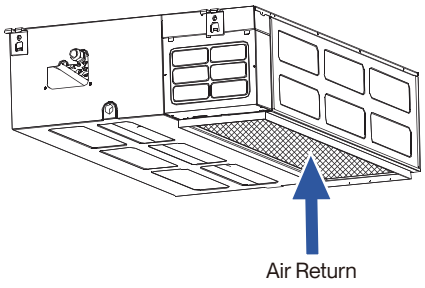

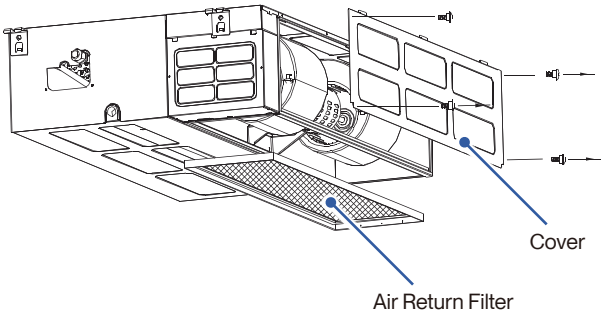

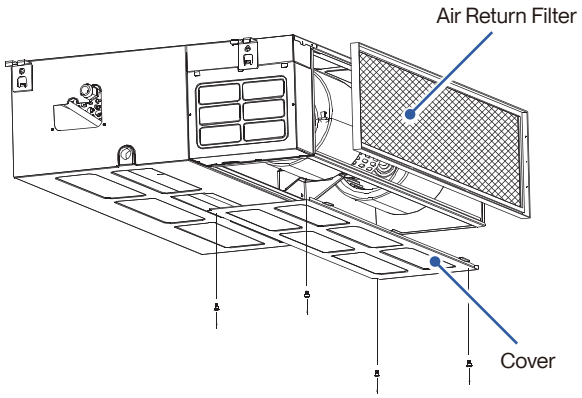

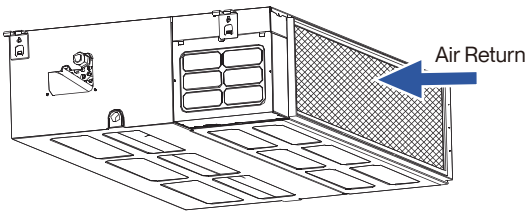

Indoor Unit Installation

Prepare Refrigerant Lineset, Drain Pipe, and Electrical Cable

1. Route the refrigerant lineset, drain pipe, and electrical cable from the indoor unit installation location to the outdoor unit installation location.
   Detail information on handling refrigerant line set on Page 25 .
   Detail information on drain pipe on Page 21 .
2. Depending on the building, you can route the lineset toward the outside through an opening on the wall or the soffit.

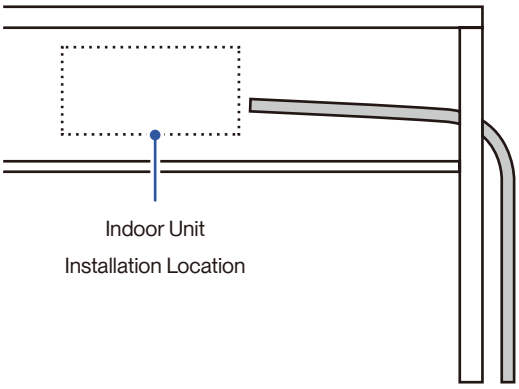

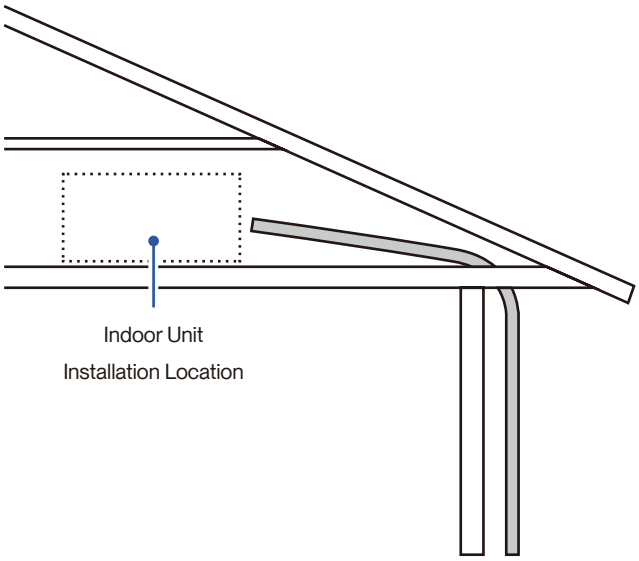

- Always insert the sleeve into the wall hole and seal the surrounding with putty / caulk.
  This will prevent water, insects, or small animals from getting into the house.

Indoor Unit Installation

Attaching Threaded Rods for Hanging

1. Using the installation template and mark the threaded rods attaching locations.
   Make sure the indoor unit refrigerant ports and drain port is facing the pre-routed refrigerant lineset and drain pipe.
2. Drill pilot holes on the marks.
3. Choose and attach the suitable anchor for your structure ceiling.
4. Cut M10 threaded rods into correct length and attach them into the anchors.

On Concrete / Brick

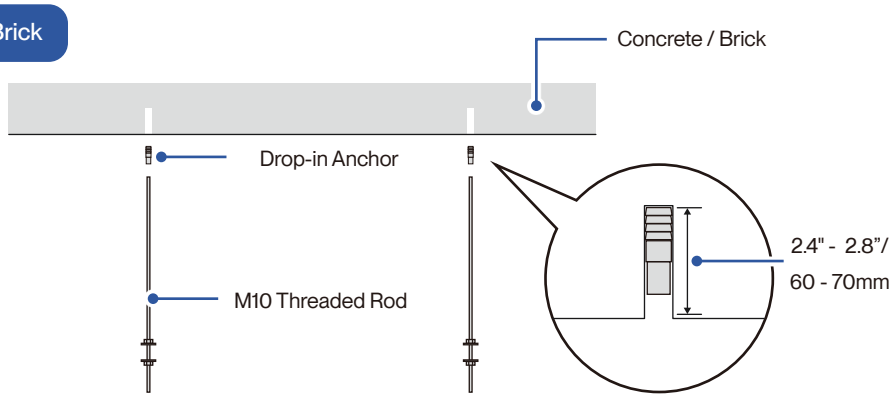

On Steel Beam

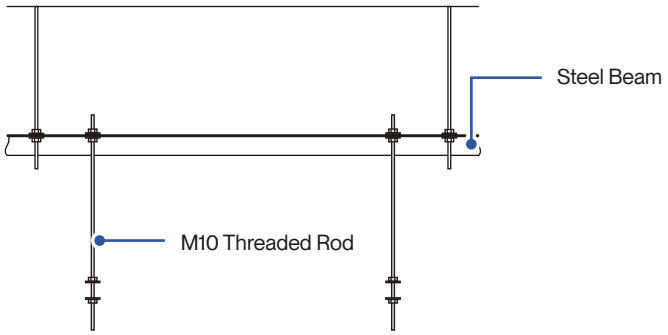

On Wood Beam

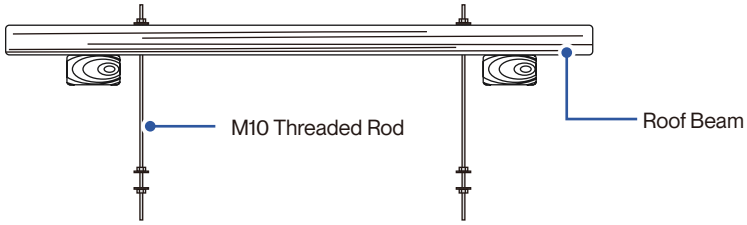

- It is recommended to use threaded rod wrench to tighten the threaded rod into the drop in anchor and make sure it can support the weight of the cassette unit and withstand operating vibration.

Indoor Unit Installation

Hanging the Indoor Unit

1. Attach M10 nuts and M10 washers to the threaded rod at the hanging height.
2. Hang the hanging brackets to the M10 washers.
3. Level the unit all around with a bullseye spirit level and tighten the M10 nuts to secure the unit in place.

- Lift the indoor unit to the ceiling with 2 people, or with the help of a power lifter. Carring the indoor unit alone without assisstant would result in injury.
- A bull's eye level is recommended to be used to level the indoor unit. The indoor unit is equipped with a built-in drain pump and float switch. Failing to level the unit may cause float switch to malfunction and cause water leakage.

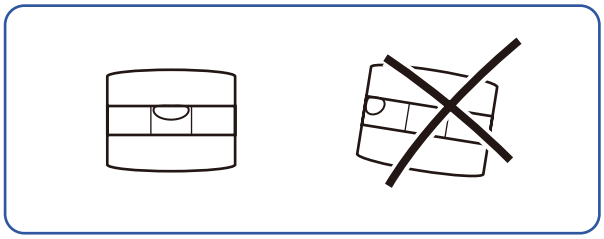

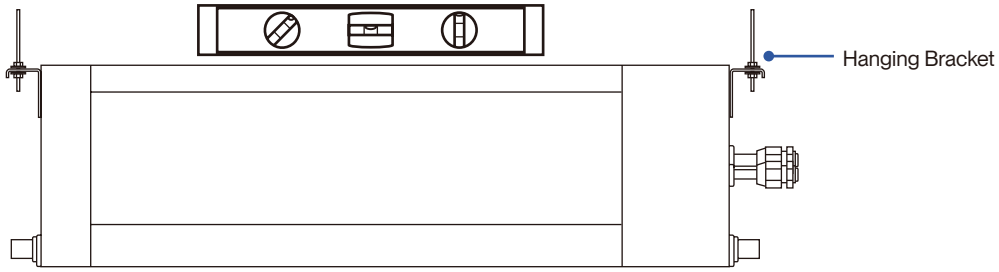

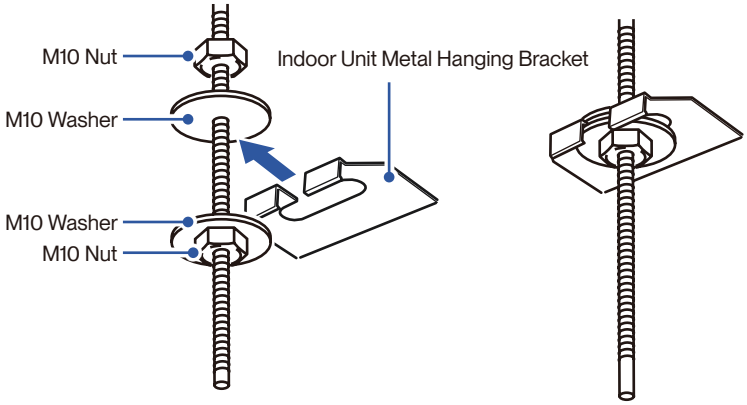

Indoor Unit Installation

Connect Air Duct

1. Attach one end of the air conduit to the indoor unit air outlet by rivet, the other end to a air outlet window in the room. Make sure the total length should be within 19.6ft or 6m.
2. Connect a canvas air conduit to the indoor unit air return and the other end to a air return window.

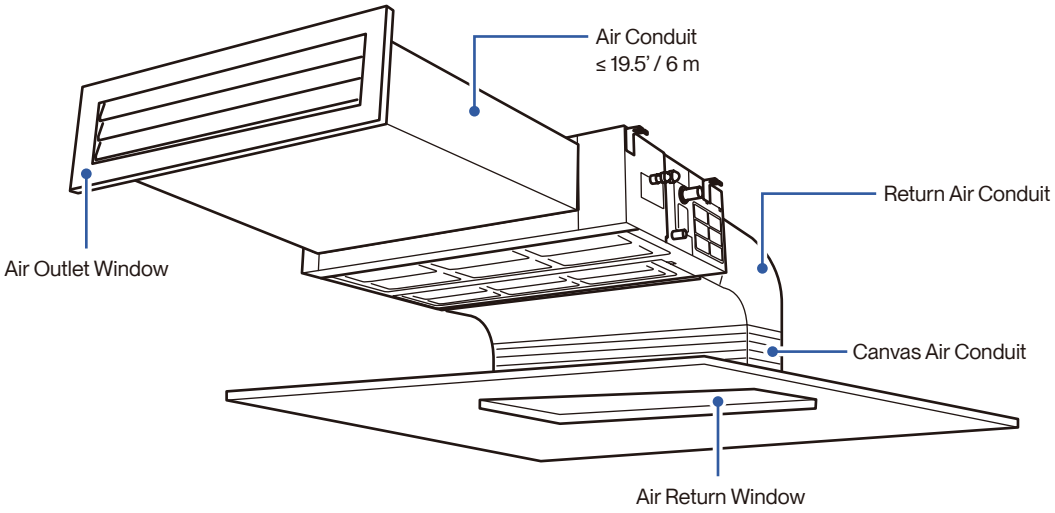

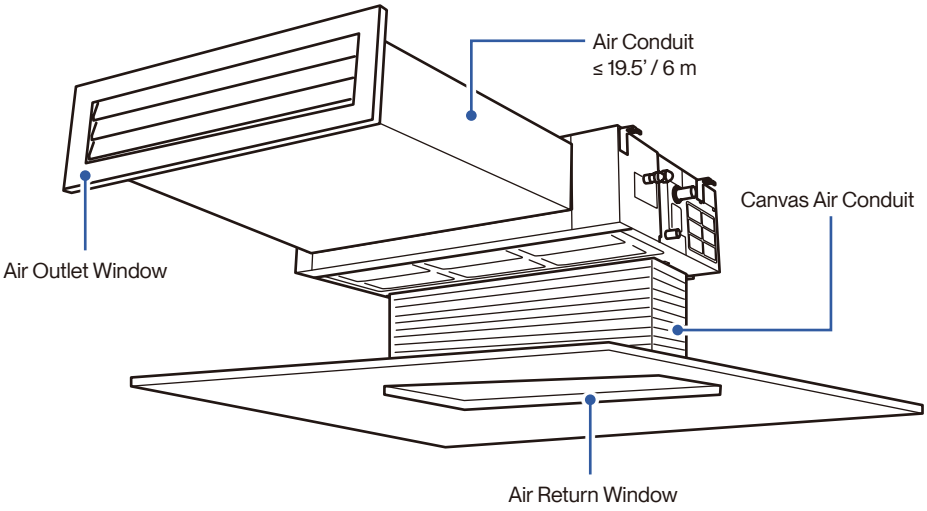

- In the case of using a round air outlet window, connect the indoor unit to a rectangular to round transition conduit.
- Air outlet conduit and return conduit should be equipped with heat-insulating layer to minimize energy loss in transmission process and limit condensation from forming.
- Air conduit and return conduit should be secured in place with suspension rod. All connection should be tightly sealed by gasket cement.
- To minimize energy loss, air pipe and air conduit should be equipped with heat-insulating layers.

Indoor Unit Installation

Connect Drain Hose

1. Attach drain pipe to the indoor unit.
2. Make sure the connection is tightly secured.
3. Wrap the connection and the drain pipe with insulating foam.

- The drain pipe and all its connection must be wrapped with insualting foam to prevent condensation from building up on the pipe's surface, which may result in water dripping in the ceiling.
- The following should be used for drain pipe installation:

Drainage Pipe Material	Ø32mm Polyvinyl Chloride (PVC) pipe
Heat Insulation Material	10mm Thick Foamed Polyethylene Insulation Plate

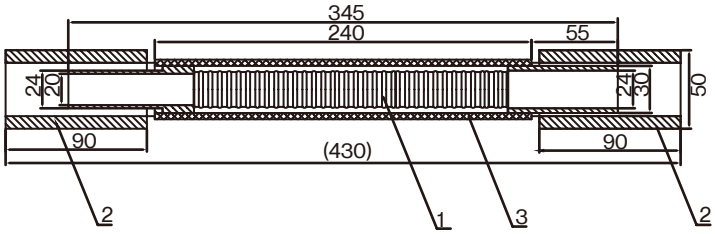

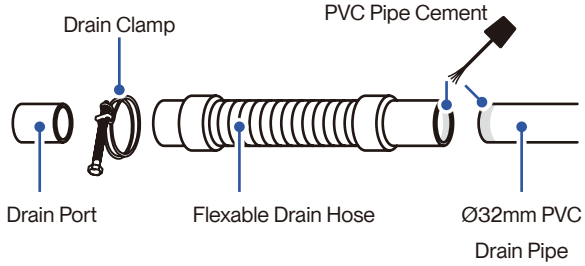

- For the ease of future maintenance and servicing, use a drain clamp to secure the drain hose to the drain port.

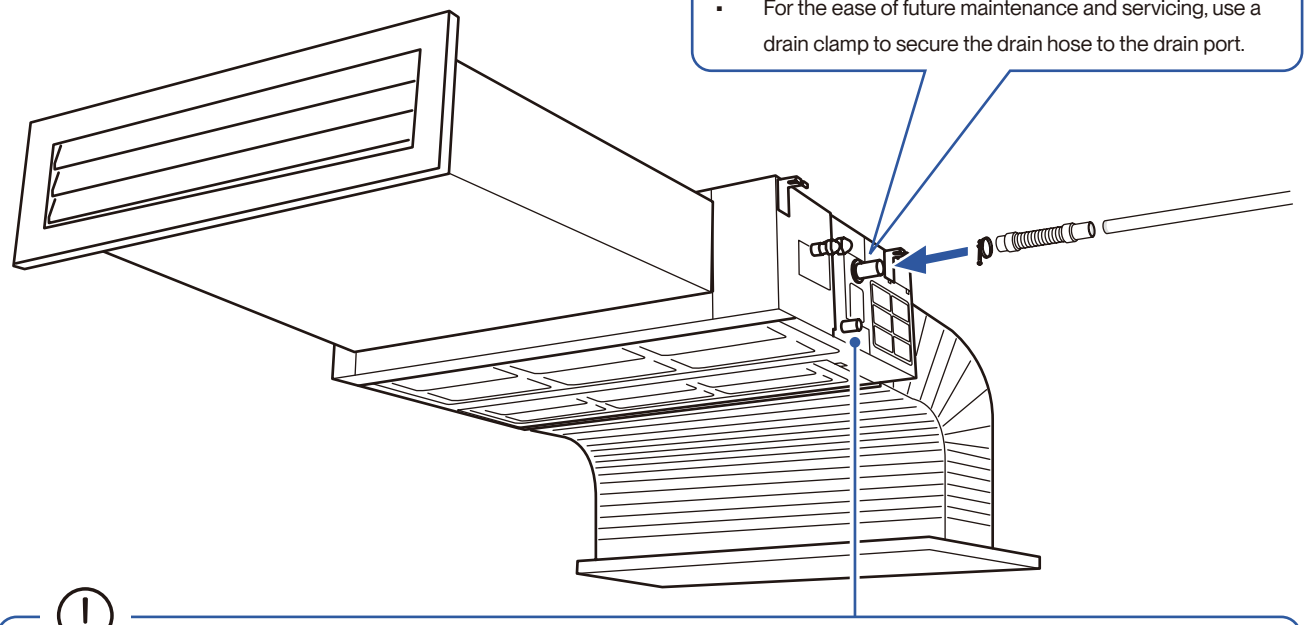

- The transparent drain port should only be used during maintance or service work. It should be plugged during normal operation.
- Do not connect the drain pipe to the transparent drain port.
- Transparent drain port can be connected to a Ø21mm drain pipe during maintance or service work.

Indoor Unit Installation

Connect Drain Hose

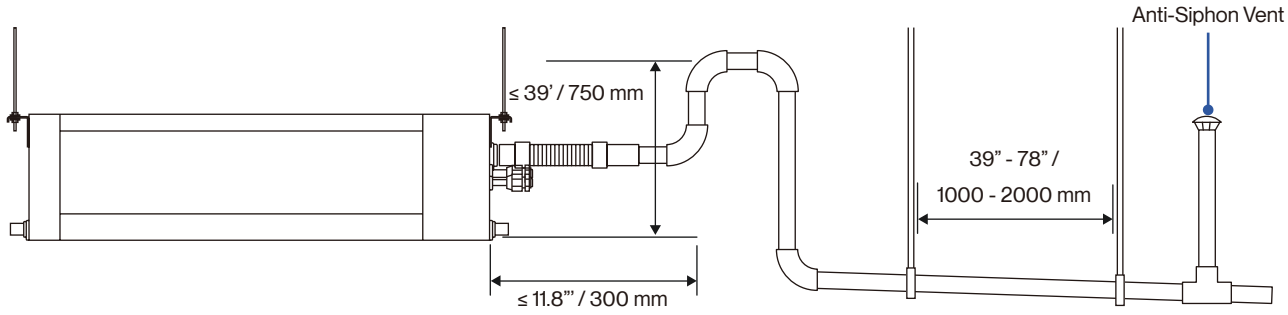

- A water pipe trap should be installed near the opening of the drain pipe to create a barrier that prevents harmful and foul-smelling gases from back flowing into the indoor unit.
- When using a long drain pipe, hang the pipe in place every 39" - 78".

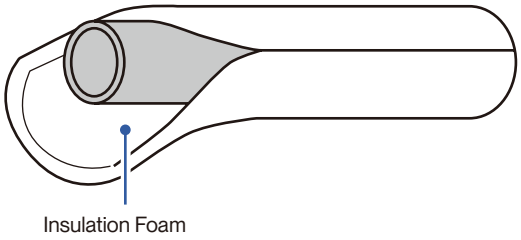

- Wrap the drain hose, drain pipe, and all connections with insulation foam. (10mm think foamed polyethylene insualtion plate)

Drain Test

Perform a drain test after installing the whole unit to check if there is any water leak.

1. Temporart disconnect the air conduit from the air outlet.
2. Turn on the AC and set it in COOL mode.
3. Slowly pour 1000 ml of water into the drain pain via the air outlet opening and make sure there is no leakage or back flow of water.
4. After the drain test, reconnect the air conduit to the air outlet.

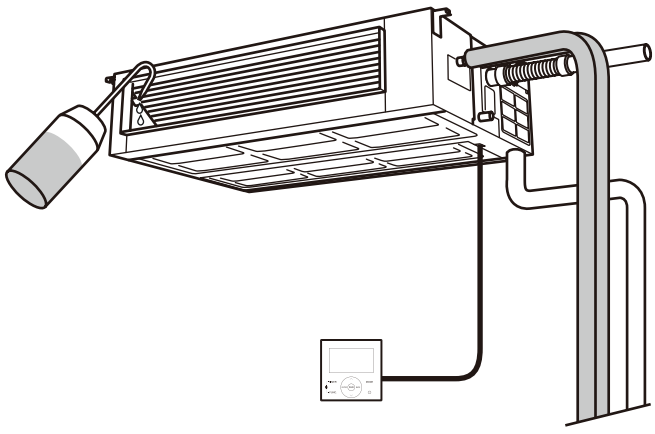

Indoor Unit Installation

Connecting the Electrical Cable

1. Feed communication cable into a electrical conduit that leads to the wall hole.
2. Feed thermostate cable into another electrical conduit.
3. Remove the terminal covers from the indoor unit.
4. Punch out the knockout hole on underneath the terminal.
5. Insert the electrical cable through the knock out hole into the terminal
6. Connect the wires to the corresponding terminal and secure the cable using the cable clamp.
7. Put the terminal cover back in place.

NOTE: Exact electrical diagram can be found on the back of the terminal cover.

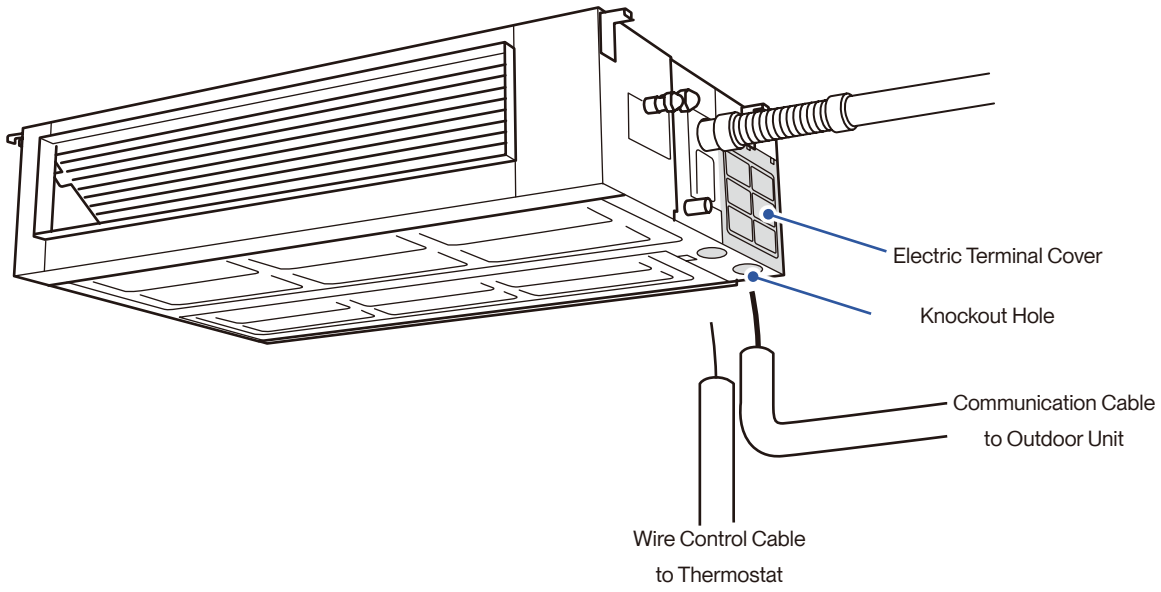

Indoor Unit Installation

Indoor Unit Circuit Diagram

048-DC-9K2V-IN
048-DC-12K2V-IN
048-DC-18K2V-IN
048-DC-24K2V-IN

| SW1 DESCRIPTION | | |

Indoor Unit Installation

Preparing the Refrigerant Pipe

1. Unroll the included refrigerant pipe.

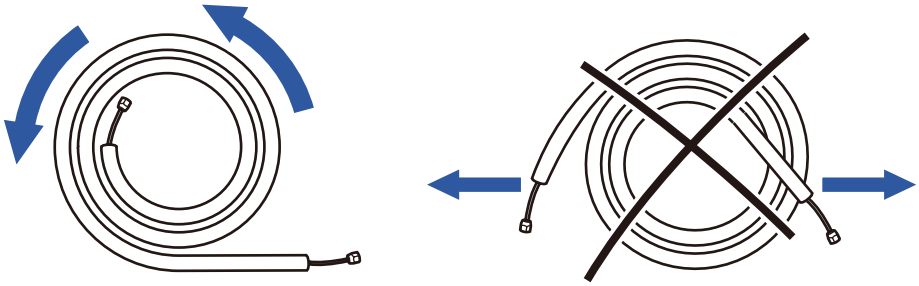

- Do not pull the refrigerant pipe to prevent the pipe from kinking or bending.

2. Remove the cover and make sure the ports are clean and smooth.



Imperfect Flaring

Dirty Flaring

3. In the case of a imperfect flaring or the pipe needs to be shorten for the installation, refrigerant pipe should be cut and flare by qualified technician.

Page 21

QUICK TIPS

- Use a pipe bender or spring bender to shape the refrigerant pipes along wall and corners. Bending the pipe without bending tools would easily kink or damage the pipe, which would cause refrigerant starvation, or leakage in the system.

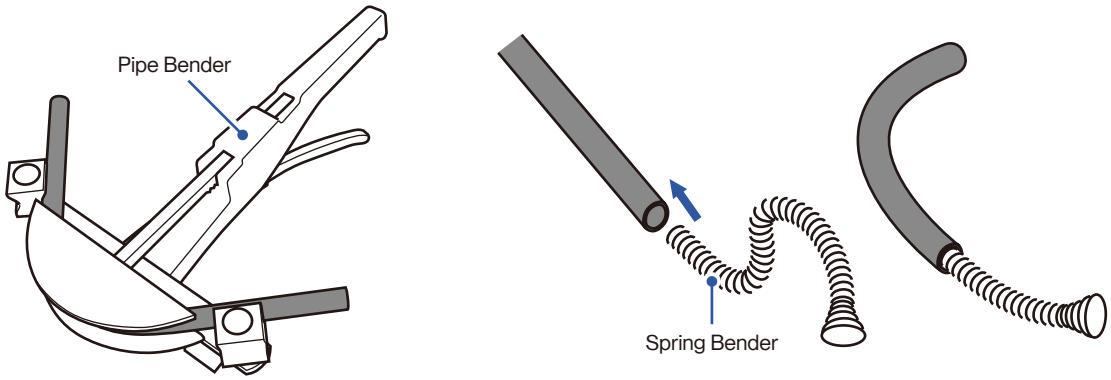

Indoor Unit Installation

Cutting and Flaring Refrigerant Pipe

WARNING

- Any refrigerant pipe alternation should only be done by qualified technician. Incorrect work may cause refrigerant leak, reduce cooling / heating efficiency, damage to the unit. Warranty does not cover any damage(s) caused by incorrect refrigerant pipe alternation.

1. Cut the copper pipe with a pipe cutter.
2. Remove any burrs or rough edges with a reamer with the pipe facing downward.
   NOTE: The opening of the pipe must face toward the ground to prevent chips or dust from entering the pipe.
3. Insert the flare nut to the pipe.
4. Use the flaring tool to flare the copper pipe. The flaring angle must match to that of the refrigerant lines from the unit.

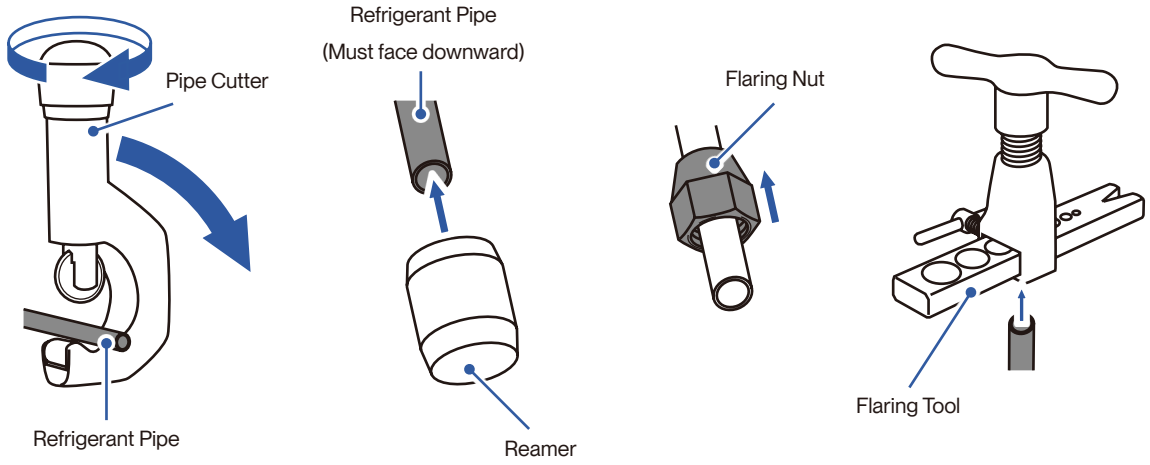

Indoor Unit Installation

Connecting Refrigerant Pipe to the Indoor Unit

1. Remove the protective caps from the refrigerant pipes and from the indoor unit refrigerant port.
2. Align the refrigerant pipe straight to the port, then tighten the nut by hand.
3. Use a torque wrench to tighten the nut according to the torque requirement.

QUICK TIPS

- A thin layer of nylog can be applied to the inside of the flare to provide better seal. (OPTIONAL)
- Make sure no nylog is on the outside of the flare.



Thin layer of nylog
(OPTIONAL)

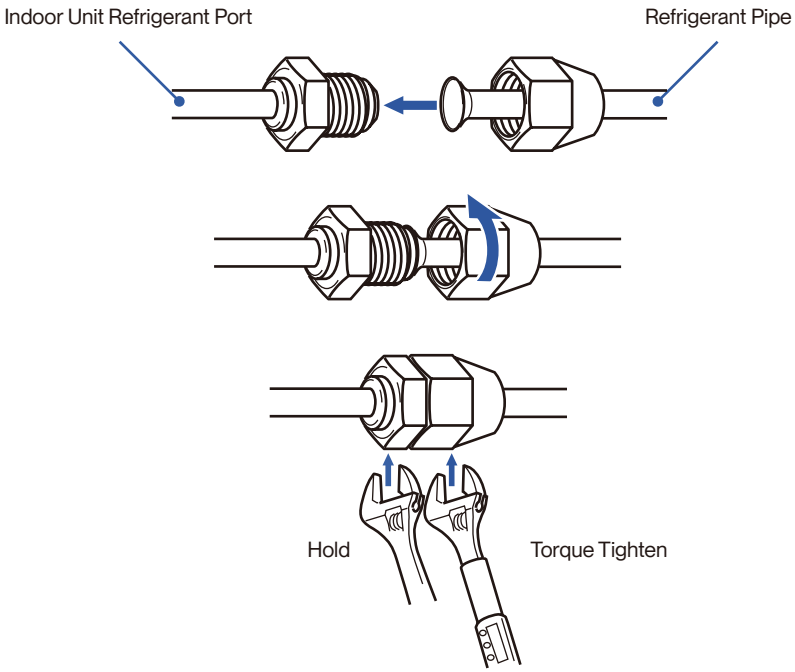

Pipe Diameter	1/4"	3/8”	1/2”	5/8”
Torque Parameter	18 - 20 N-M 13.3 - 14.8 lbf-ft 1.8 - 2.0 kgf-m	30 - 35 N-M 22.1 - 25.8 lbf-ft 3.0 - 3.6 kgf-m	45 - 50 N-M 33.2 - 36.9 lbf-ft 4.6 - 5.1 kgf-m	60 - 65 N-M 44.3 - 48.0 lbf-ft 6.1 - 6.6 kgf-m

- Connection must be torque tighten to prevent leak. Do not over tighten.
- Refrigerant piping and torque requirement for specific model is on Page 13.

Indoor Unit Installation

Connecting Refrigerant Pipe to the Indoor Unit

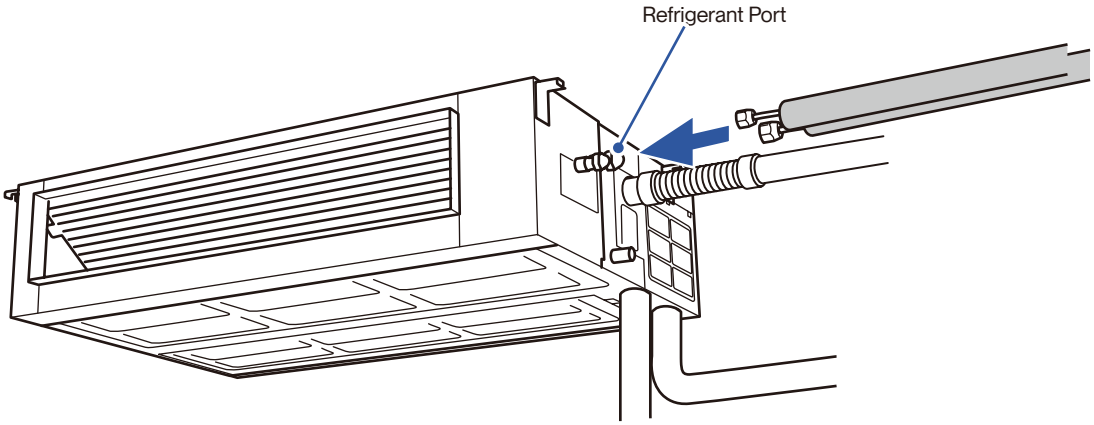

- The refrigerant pipe and connection joint should be wrapped in heat insulating materials and prevent the formation of condensed air.

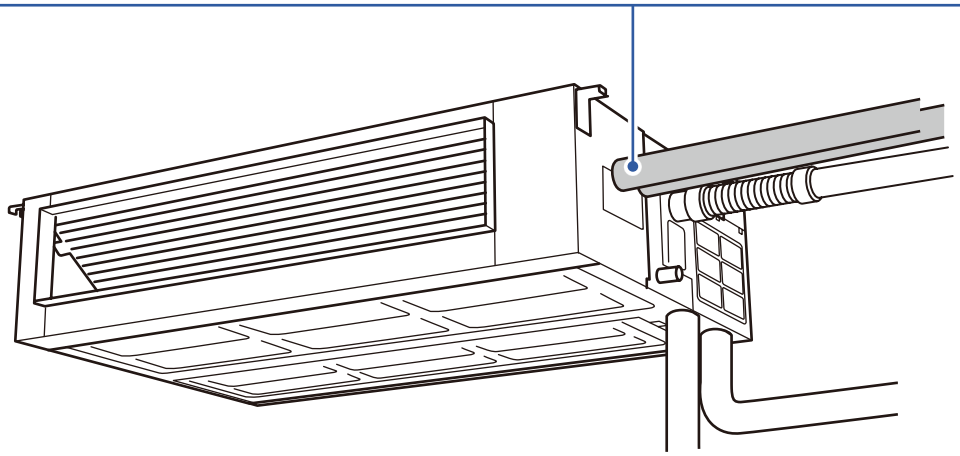

Outdoor Unit Installation

Secure the Outdoor Unit (Ground Installation)

1. Place a concrete pad on the installation location.

   NOTE: You do not need a concrete pad if the ground is concrete.

2. Mount the indoor unit on a mounting stand or base kit.

   NOTE: Rubber foot pads can be placed between the outdoor unit and the mounting kit to reduce vibration or noise.

3. Drill holes on the concrete pad or concrete ground.
4. Secure the mounting stand or base kit on the concrete with concrete anchor bolts.

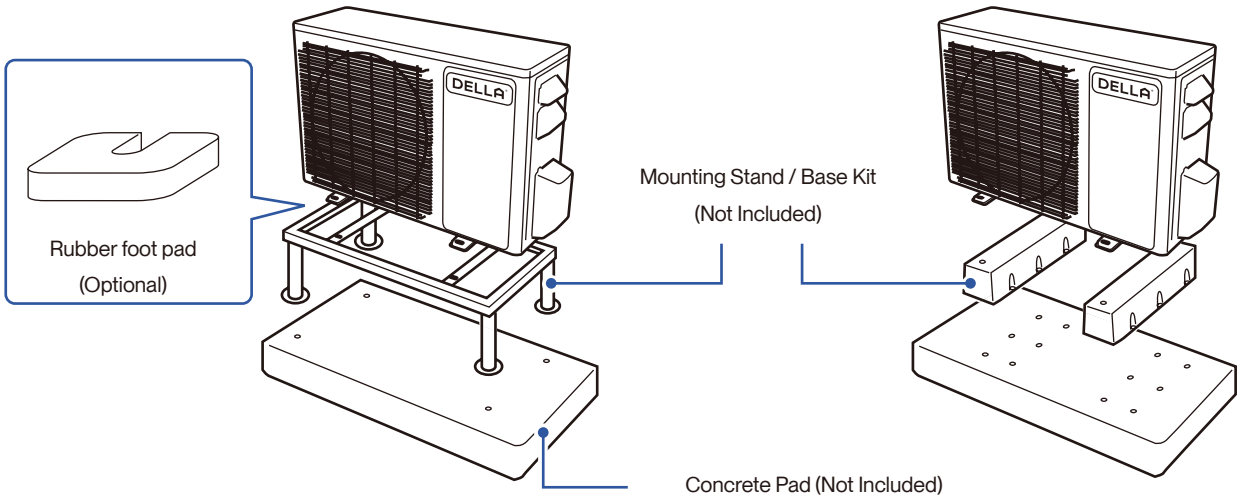

- Outdoor unit should be installed on a elevated mounting stand with snow cover if using in a snowy region.

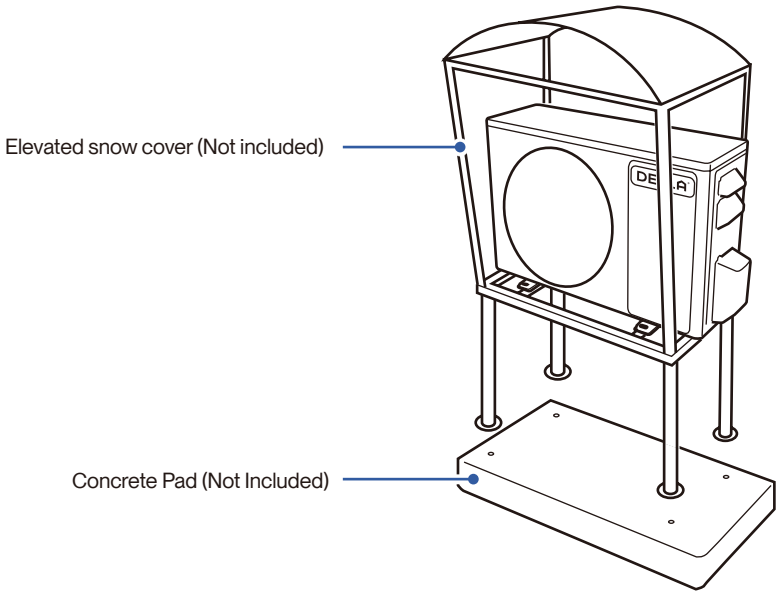

Outdoor Unit Installation

Secure the Outdoor Unit (Wall Installation)

The outdoor unit can be fixed on a wall mounting bracket if there is no ground mounting option.

1. Measure the distance between the outdoor unit's legs.
2. Mount the wall mounting bracket on the wall.
3. Secure the outdoor unit on the wall mounting bracket.

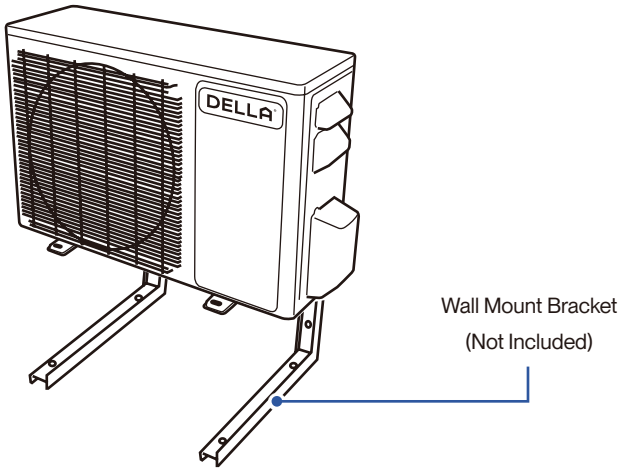

CAUTION

- The wall mounting bracket and the wall must be able to support at least 4 times the weight of the outdoor unit.

Attach Drainage Port and Hose

Outdoor unit drainage helps prevent condensation or frost inside the unit during cold weather.

1. Drainage joint installation is recommended for heat pump models.
2. Insert drainage joint into the bottom hole of the outdoor unit.
3. Connect one end of the drain hose to the joint and the other end to your desired drainage point.

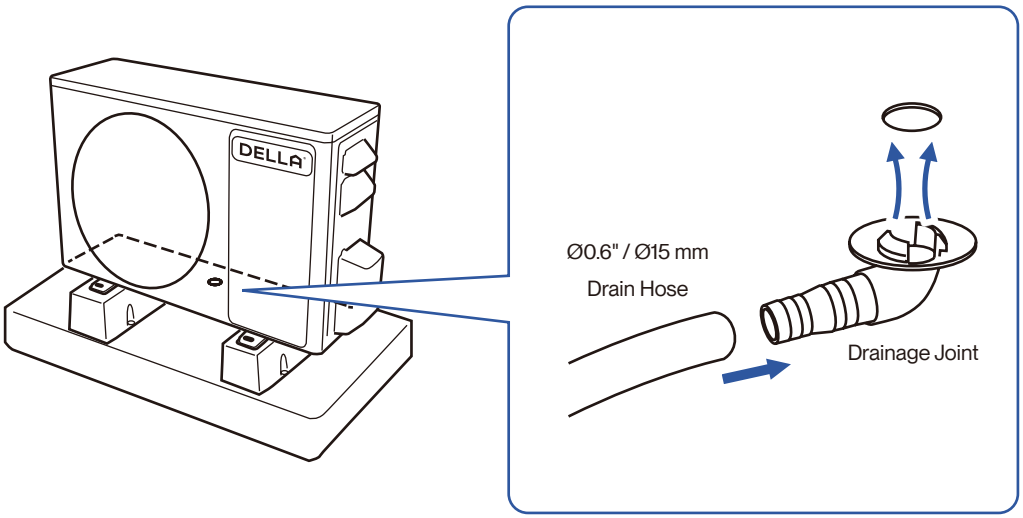

Outdoor Unit Installation

Connect the Refrigerant Pipes to the Outdoor Unit

Outdoor Unit Below Indoor Unit

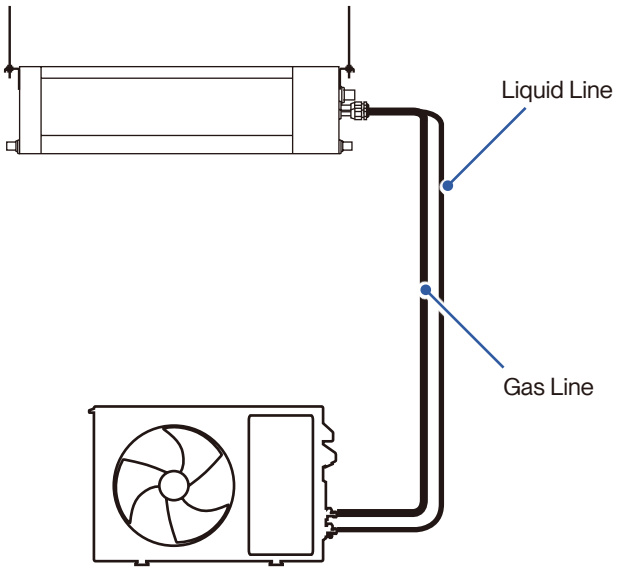

Outdoor Unit Above Indoor Unit

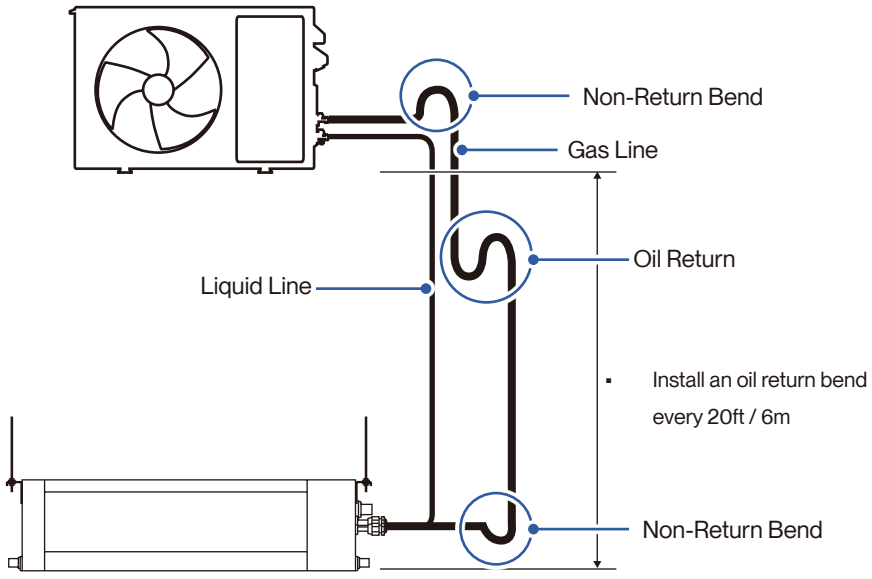

- Oil return bend and non-return bend at the lowest and highest position of the gas line is necessary when installing the outdoor unit above the indoor unit.
- Refrigerant pipe handling on Page 25

Outdoor Unit Installation

Connect the Refrigerant Pipes to the Outdoor Unit

1. Unscrew the screws on the valve cover, press it down gently and remove the cover from the outdoor unit.
2. Remove plastic caps from the end of the valves.
3. Align the refrigerant pipes straight to the outdoor unit valve, then tighten the nut by hand.
4. Use a torque wrench to tighten the nut according to the torque requirement.

QUICK TIPS

- A thin layer of nylog can be applied to the inside of the flare to provide better seal. (OPTIONAL)
- Make sure no nylog is on the outside of the flare.



Thin layer of nylog
(OPTIONAL)

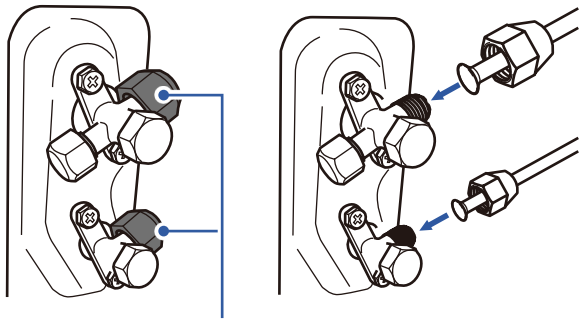

Remove Plastic Caps

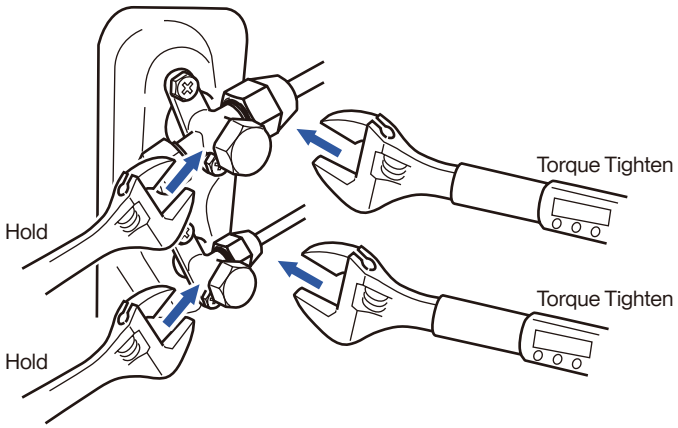

Pipe Diameter	1/4"	3/8”	1/2”	5/8”
Torque Parameter	18 - 20 N-M 13.3 - 14.8 lbf-ft 1.8 - 2.0 kgf-m	30 - 35 N-M 22.1 - 25.8 lbf-ft 3.0 - 3.6 kgf-m	45 - 50 N-M 33.2 - 36.9 lbf-ft 4.6 - 5.1 kgf-m	60 - 65 N-M 44.3 - 48.0 lbf-ft 6.1 - 6.6 kgf-m

- Connection must be torque tighten to prevent leak. Do not over tighten.
- Refrigerant piping and torque requirement for specific model is on Page 13.

Outdoor Unit Installation

Connect the Electrical Wire

WARNING

- Electrical wiring must be done by a qualified technician or electrician. Failing to connect the wires correctly will cause short circuit, a fire, and property damage.
- Do not use the communication cable as power supply cable.

1. Unscrew the screws from the wiring cover, press the cover downward gently, and remove from the outdoor unit.
2. Unscrew the cable clamp.
3. Insert the communication cable from the indoor unit through the opening on the cover, then connect the wires to the outdoor unit terminal.
4. Insert power supply cable (not included) to the opening on the cover, then connect the wires to the outdoor unit terminal.
5. Turn off any power from the power supply, and connect the power supply cable to the power supply circuit box.
   Exact power supply cable and breaker size requirement on Page 13
6. Reinstall the wiring cover to its original place.

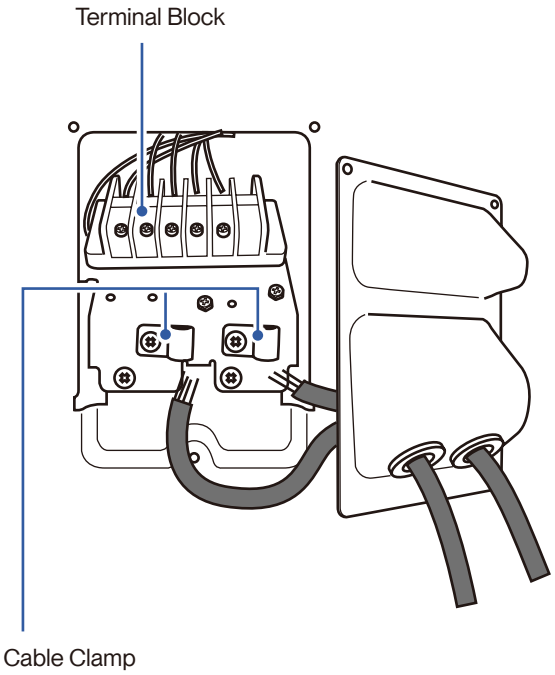

For 220V Unit

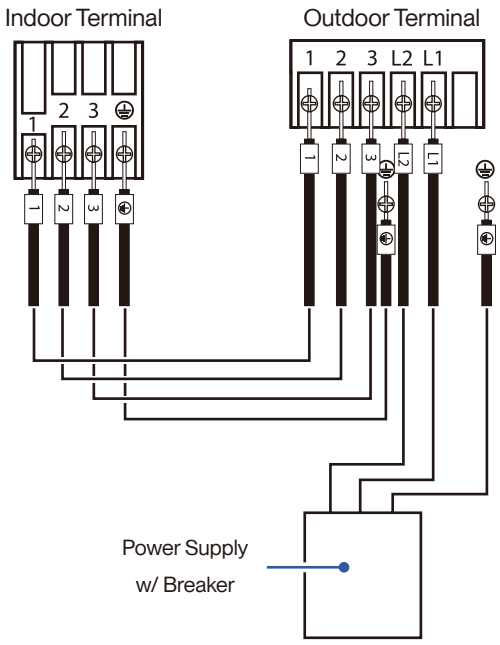

Outdoor Unit Installation

Outdoor Unit Circuit Diagram

048-TP-9K2V-24S-OUT
048-TP-12K2V-24S-OUT
048-TP-18K2V-23S-OUT

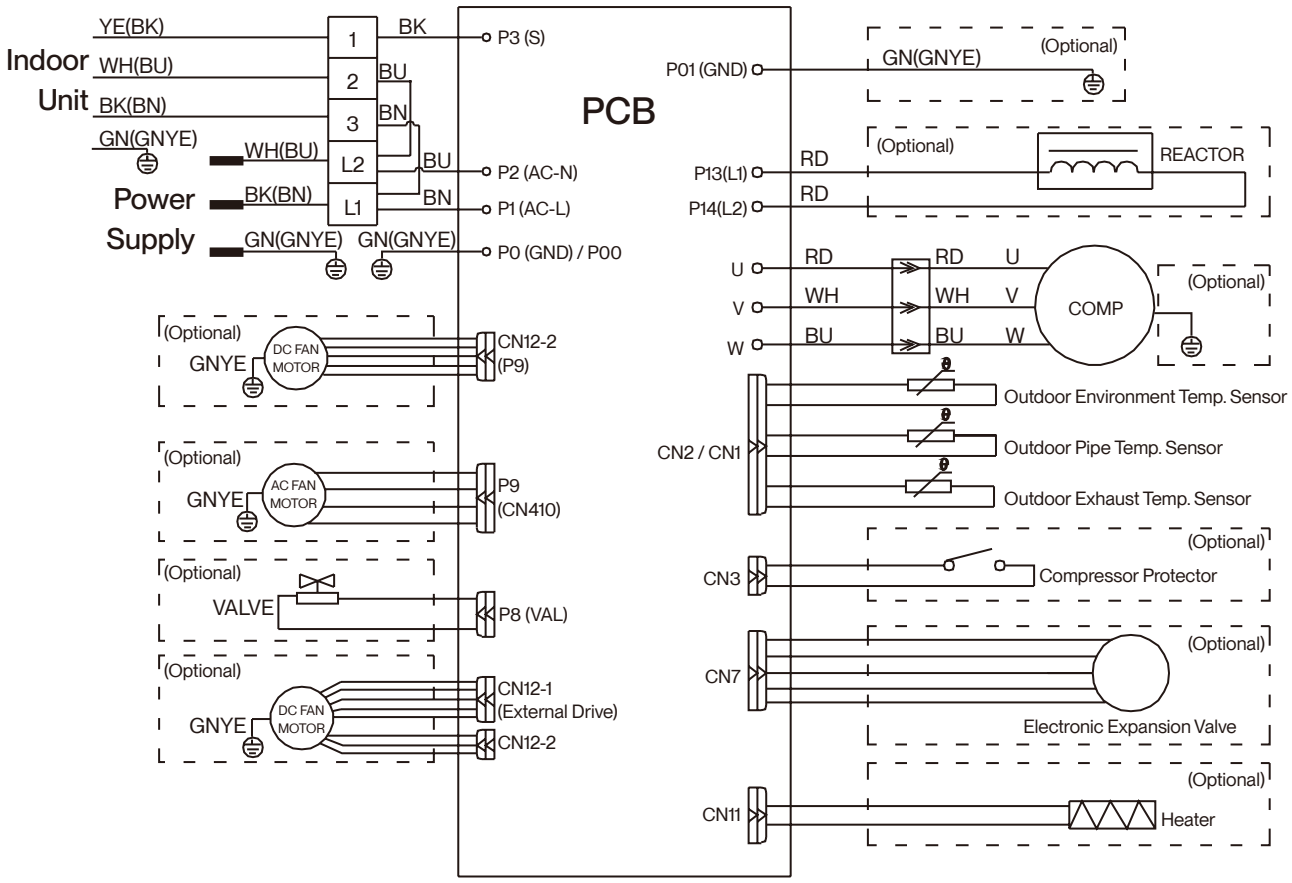

Outdoor Unit Installation

Outdoor Unit Circuit Diagram

048-TP-23K2V-23S-OUT

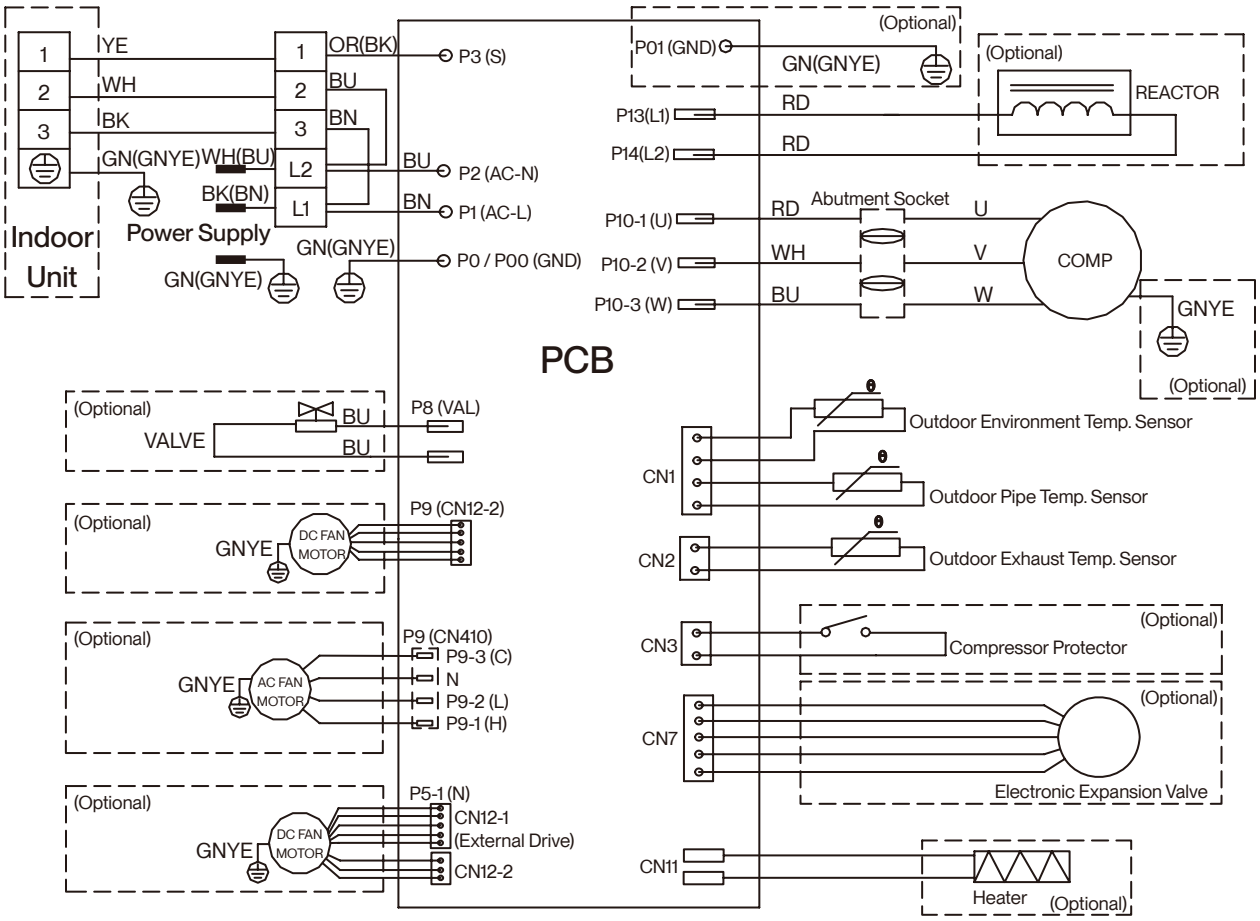

Indoor and Outdoor Unit Installation

Vacuum Pumping, Leak Test (Using Micron Gauge) *RECOMMENDED, and Adjust Refrigernat Level

1. Remove the protective caps from the service port, low-pressure valve (Lo·R), and high-pressure valve (Hi·R).
2. Connect the charging hose with a push pin to the service port.
3. Connect a the vacuum pump to the other end of the charging hose and the micron gauge in between the service port and the pump.
4. Open the valve adapter on the charging set, then turn on the vacuum pump to vacuum the system.
5. Let the vacuum pump run until the micron gauge indicate the value of 500 micron or lower. (ideally around 350 micron)
6. Close the valve adapter on the charging set and turn off the vacuum pump.
7. Leave the system connected with the micron gauge for 5 minutes, then make sure the gauge indication does not exceed 500 micron.
   NOTE: In the case of a leak, and the micron level increases above 500 micron, reconnect all the connection joints on the refrigerant line, and redo the vacuum pumping.
8. Disconnect the pressure hose and the micron gauge from the service port.
9. The air conditioner comes with enough refrigerant for the standard length pipe set, add refrigerant charge if you use a lengthened refrigerant line.
   Page 13
10. Turn on the air conditioner and confirm it can power on properly, and then turn it off.
    Page 52 / 62
11. Fully open the low pressure valve (Lo·R) and high pressure valve (Hi·R)
12. Put the protective caps back on the service, low-pressure valve, and high-pressure valve.
13. Tighten the caps.

- Only add refrigerant if you use a lengthened refrigerant line. There is no need to adjust or recover any amount refrigerant if you use a standard or shortened refrigerant line.
- Do not open the refrigerant valve before vacuum pumping.
- Stop and disconnect the vacuum pump from the system before opening the refrigerant valve.
- Each indoor unit connected to the multizone outdoor unit must vacuumed respectively.

Additional Refrigerant

- Additional Refrigerant Amount (ounce)
  [0.11 × (Total Install length (ft) - 25)] oz
- Additional Refrigerant Amount (gram)
  [10 × (Total Install length (m) - 7.5)] g

Indoor and Outdoor Unit Installation

Micron Gauge Connection

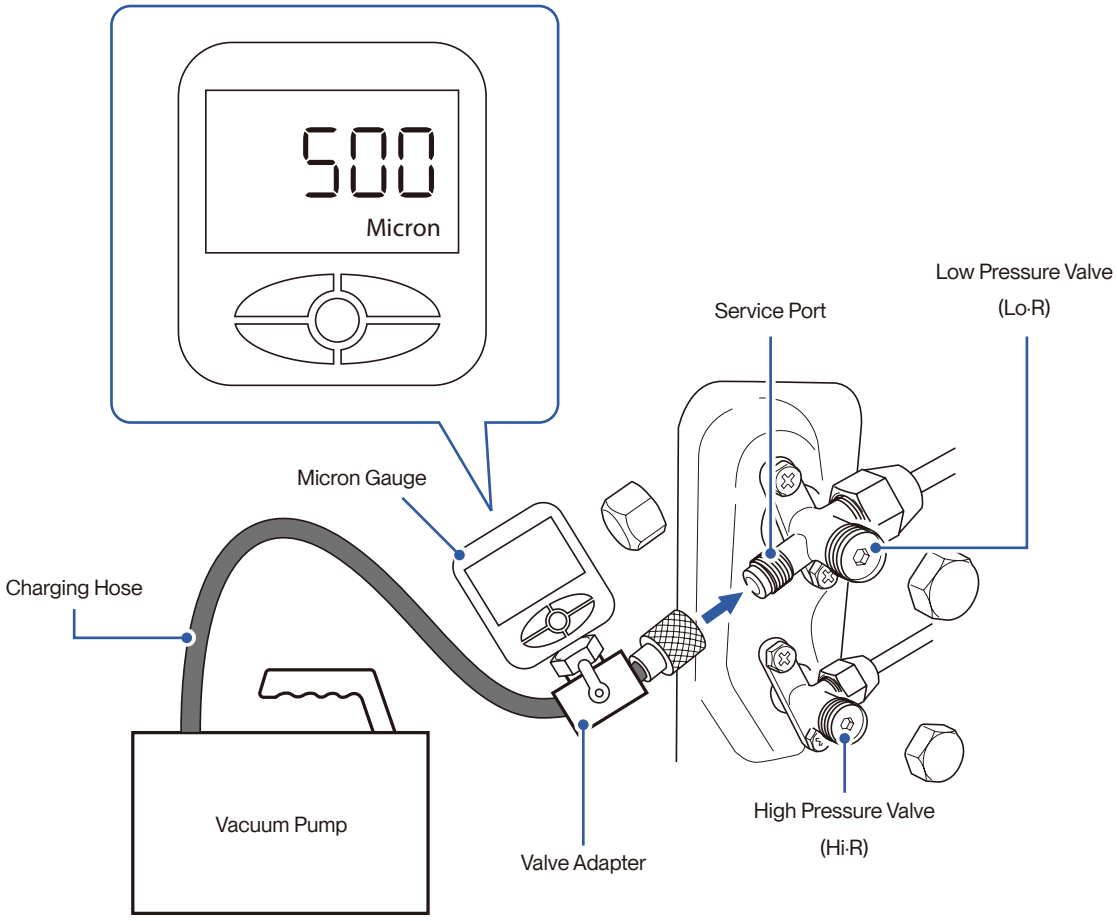

Indoor and Outdoor Unit Installation

Vacuum Pumping, Leak Test (Using Manifold Gauge), and Adjust Refrigernat Level

- Analog manifold gauge is less accurate and measure vacuum at a lower resolution than a digital micron gauge. DELLA recommend using micron gauge for vacuum pumping mentioned on Page 36

1. Remove the protective caps from the service port, low-pressure valve (Lo·R), and high-pressure valve (Hi·R).
2. Connect the pressure hose with a push pin from the manifold gauge to the service port.
3. Connect the charging hose from the manifold gauge to the vacuum pump.
4. OPEN the low-pressure valve (Lo·M) and CLOSE the high pressure valve (Hi·M) on the manifold gauge.
5. Turn on the vacuum pump to vacuum the system.
6. Let the vacuum pump run for at least 15 minutes and make sure the gauge indicates −0.1 Mpa (−76 cmHg).
   NOTE: Depending on your refrigerant line set length and vacuum pump power, it might takes longer time.
7. Close the pressure valve (Lo·M) and turn off the vacuum pump.
8. Leave the system connected with the manifold gauge for 5 minutes, then make sure the gauge indication does not exceed 0.005 Mpa.
   NOTE: In the case of a leak, and the pressure value increases, reconnect all the connection joints on the refrigerant line, and redo the vacuum pumping.
9. Open the high-pressure valve (Hi·R) for 1/4 turn, then close the valve after 5 seconds.

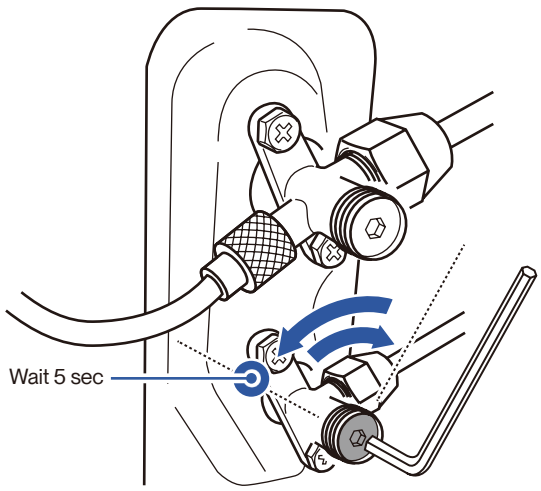

10. Check all connection joints with refrigerant leak detector or liquid leak detector.
11. The air conditioner comes with enough refrigerant for the standard length pipe set, add refrigerant charge if you use a lengthened refrigerant line.
    Page 13
12. Turn on the air conditioner and confirm it can power on properly, and then turn it off.
    Page 52 / 62
13. Disconnect the pressure hose from the service port, then fully open the low pressure valve (Lo·R) and high pressure valve (Hi·R).
14. Put the protective caps back on the service, low-pressure valve, and high-pressure valve.
15. Tighten the caps.

- Only add refrigerant if you use a lengthened refrigerant line. There is no need to adjust or recover any amount refrigerant if you use a standard or shortened refrigerant line.
- Do not open the refrigerant valve before vacuum pumping.
- Stop and disconnect the vacuum pump from the system before opening the refrigerant valve.
- Each indoor unit connected to the multizone outdoor unit must vacuumed respectively.

Additional Refrigerant

- Additional Refrigerant Amount (ounce)
  [0.11 × (Total Install length (ft) - 25)] oz
- Additional Refrigerant Amount (gram)
  [10 × (Total Install length (m) - 7.5)] g

Indoor and Outdoor Unit Installation

Manifold Gauge Connection

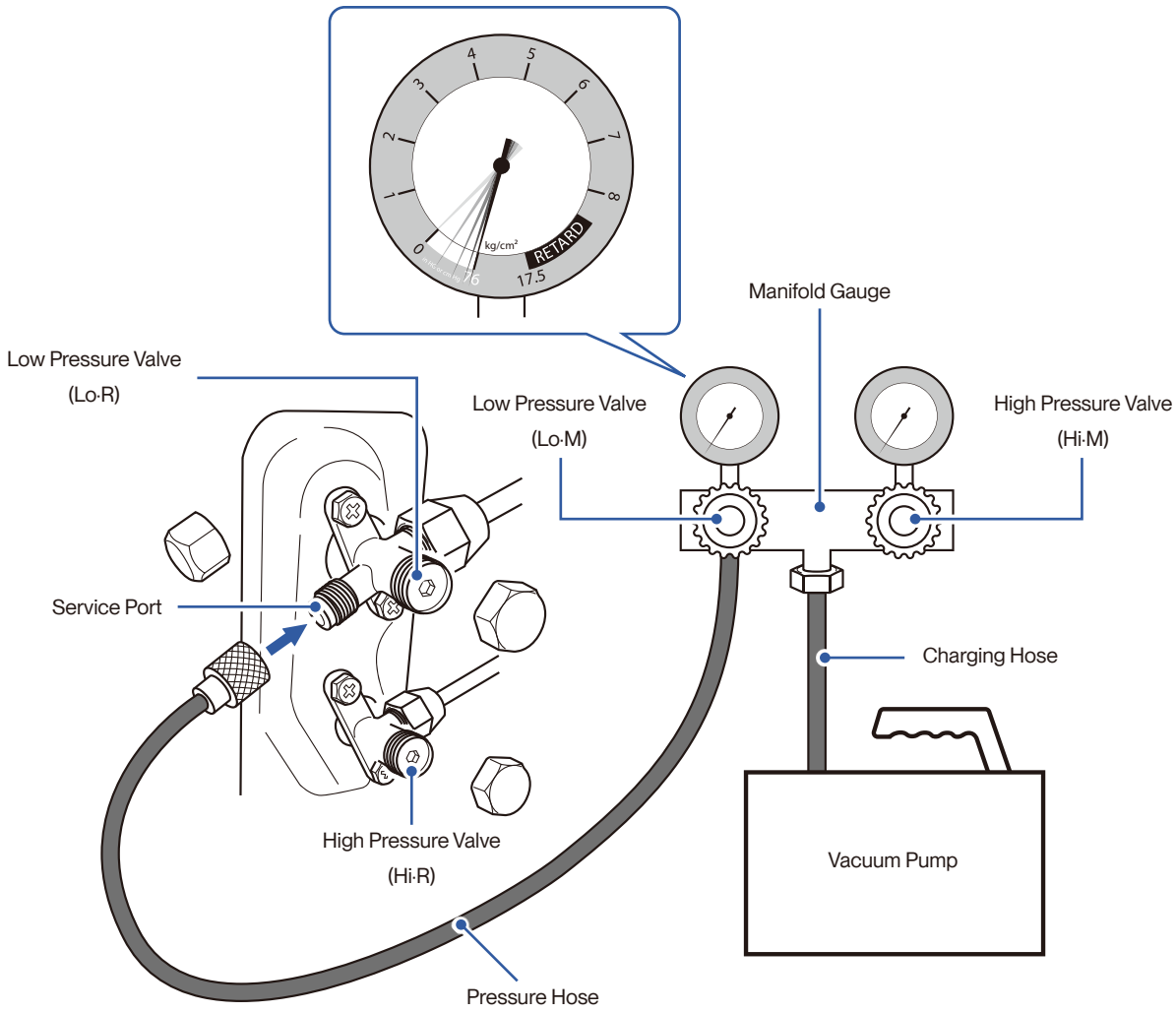

Thermostat Installation

Specification

	048-T-CTRL
Input Voltage	DC 5V / 12V
Ambient Temperature Range	23°F - 110°F / -5°C - 43°C
Ambient Humidity Range	RH 40% - RH 90%
Wire Type	Shielded vinyl cord / cable
Wire Size	0.5 - 1.25mm²
Wire Length	49ft / 15m

Dimension

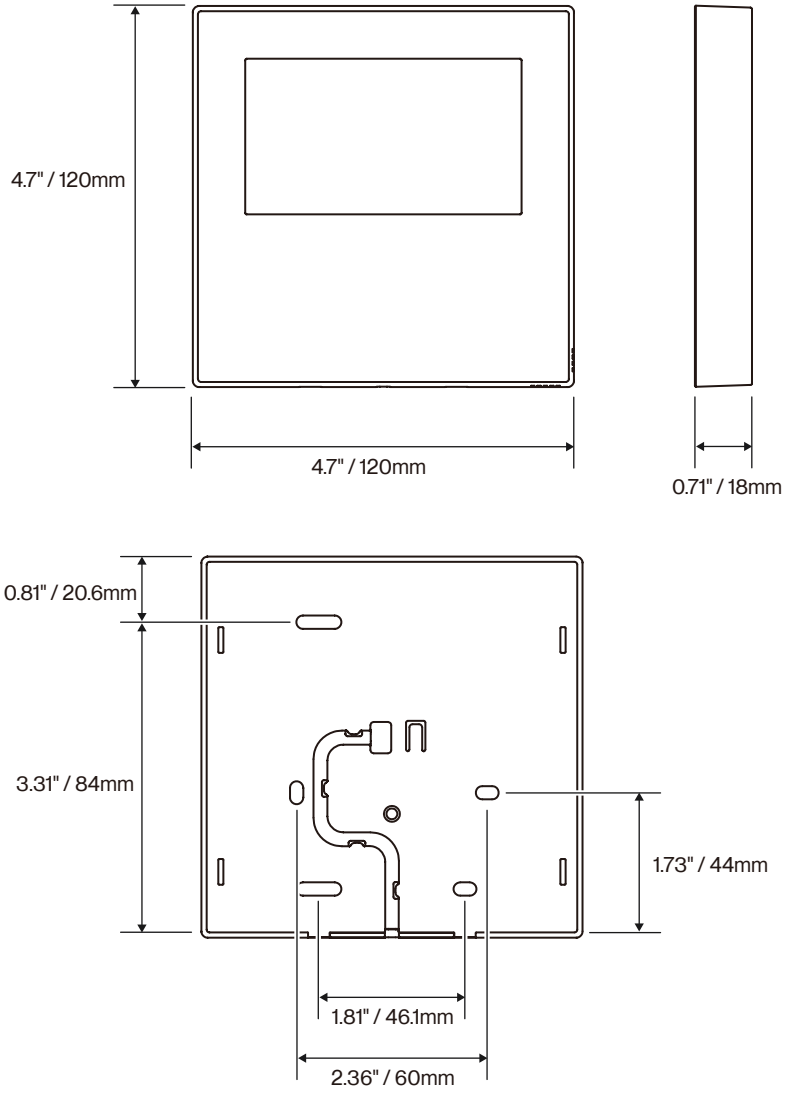

Thermostat Installation

Mounting the Thermostat

1. Use a flathead screwdriver to gently pry apart the back cover and the front cover.
2. Mount the back cover of the thermostat directly on the wall or on a 86 type (86mm x 86mm) switch box.

- Be careful when pry open the two halves and not damage the PCB on the front cover.

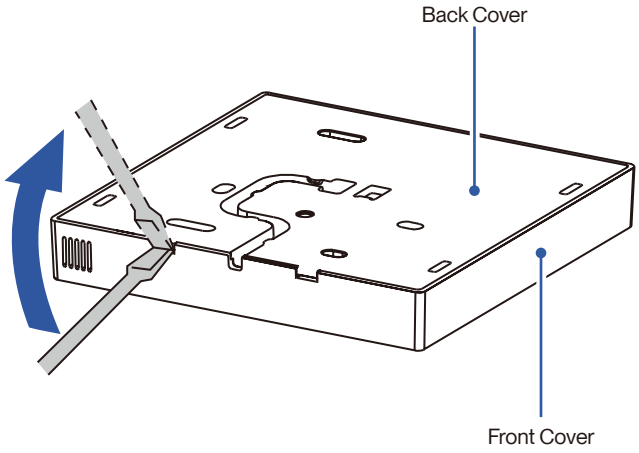

Mounting on Wall

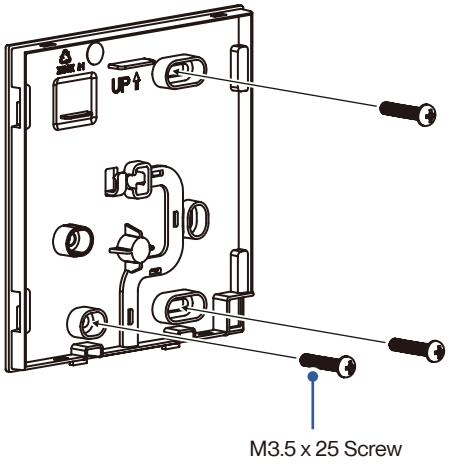

Mounting on 86 Type Switch Box

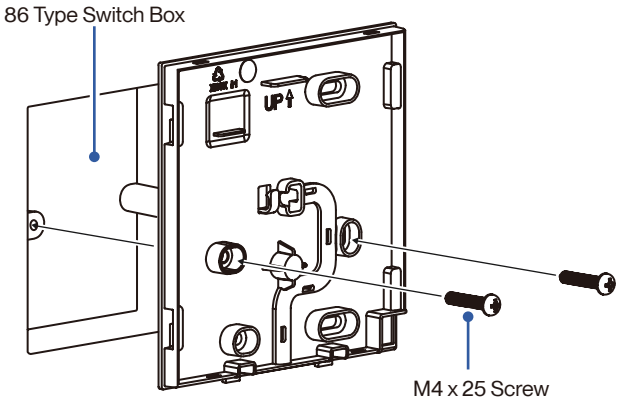

Thermostat Installation

Backup Battery (Optional)

- Backup battery can be installed into the thermostat's battery compartment.
- Backup batter provides power to the thermostat in case of power failure to ensure time keeping.

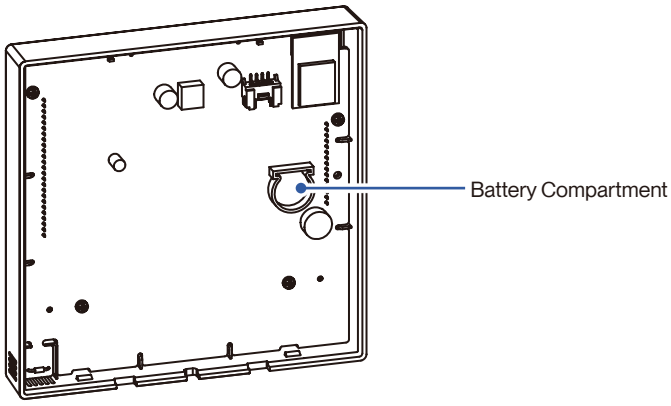

Wiring

1. Connect the wire control cable from the indoor unit to the thermostat.
2. Seal the gap between the wire and the opening on the thermostat's back cover with putty to prevent moisture, water, or insect from getting into the thermostat.

- The conection lug at the end of the shielded wire should be properly grounded.

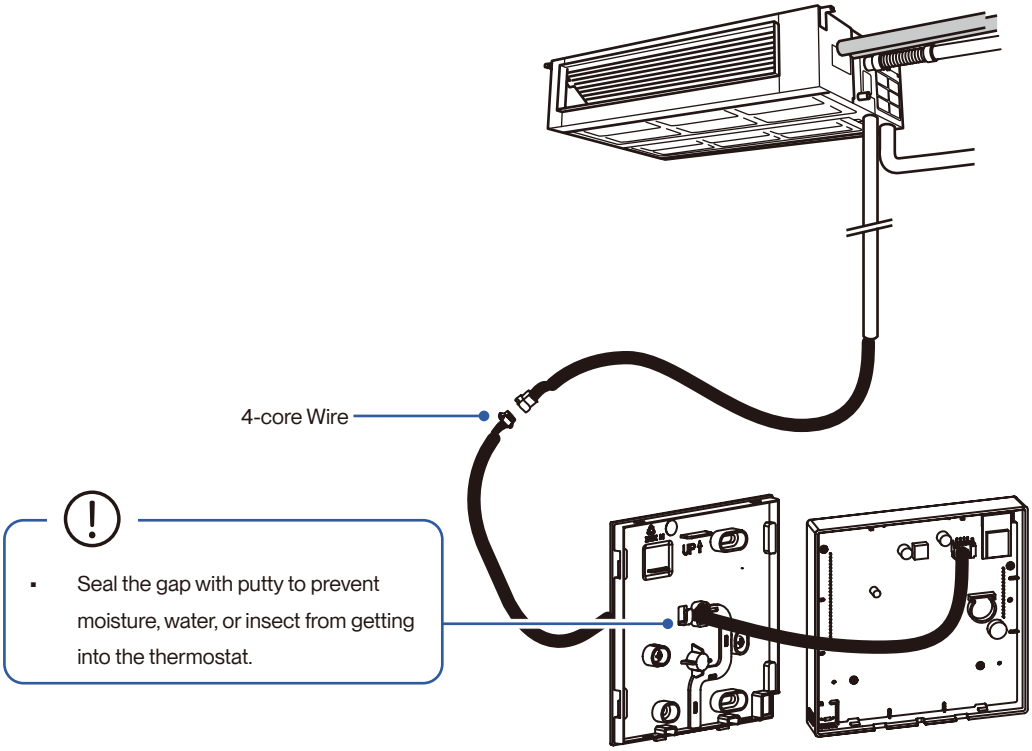

Thermostat Installation

Mounting the Thermostat

1. Arrange the wire between the front and back cover.
2. Reattach the front cover to the back cover. Make sure the cover click into place.

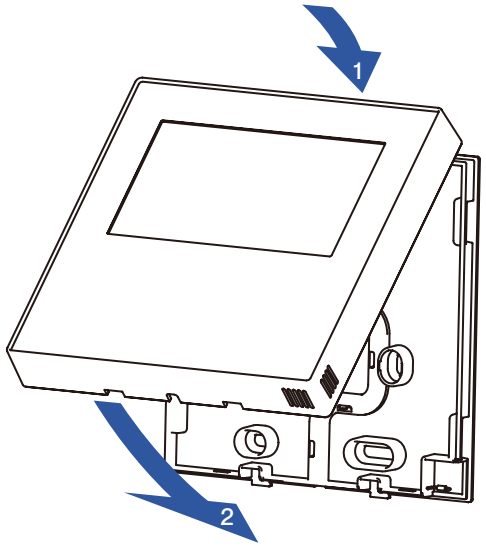

Finishing

Check List

Go through the following list and check your installation.

☑ the check box for each confirmation.

Check List	Status
Are the indoor and outdoor unit kept at least the minimum distance away from the closest wall and obstacle?	☐
Is the indoor securely mounted?	☐
Is the drain hose properly attached?	☐
Are the refrigerant pipes securely connected and no refrigerant leakage?	☐
Are all drain hose and refrigerant pipes properly insulated?	☐
Is the system properly vacuumed?	☐
Is all the wall opening sealed off?	☐
Are the refrigerant valves fully opened?	☐
Do the power supply and voltage match the unit rating? (Check before connecting to power supply)	☐
Is the electrical wiring in the unit connected and secured?	☐
Are the units properly grounded?	☐
Is the power breaker, fuse, or protection device installed?	☐
Is the thermostat connected and can it send control commands to the air conditioner?	☐
Can the remote control send control commands to the air conditioner?	☐

- Any failures, accidents, or damages caused by improper installation are not covered by the warranty.

Finishing

Test Run

After the installation, test run the mini split system and take sure it performs and works properly without water leak or abnormal noise.

1. Turn on the power supply.
2. Turn on the air conditioner using the remote control / thermostat.
3. Perform a drain test Page 22
4. Test the unit at the lowest temperature in COOL mode.
5. Test the unit at the highest temperature in HEAT mode.
6. Test each mode for at least 8 minutes.
   - Measure the air temperature at the air outlet.
   - Check if water drains properly from the drainage hose.
   - Check if the louver and deflectors move properly.
7. If everything is operating normally, return to normal setting and turn off the air conditioner.
8. Inform the user to read the operation instruction before use, and demonstrate to the user how to use the air conditioner, the necessary knowledge of service and maintenance, and a reminder of accessories storage.

QUICK TIPS

Contact us if you encounter any problems during or after the installation.

support.dellahome.com

800-863-4143
6:00 a.m. - 4:00 p.m. PST
Monday - Friday

24/7 Live Chat

Before Using

Operation Tips

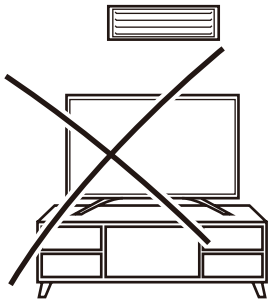

Avoid placing TV, radio or large furniture next to the air conditioner.

- It may block wind flow or interfere with the remote control.

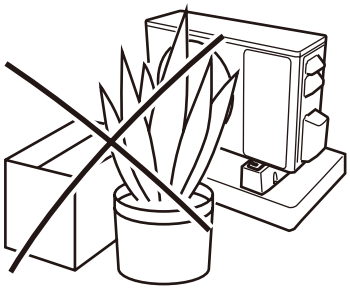

Avoid putting plants or objects around the outdoor unit.

- It may lower the air conditioner efficiency or cause malfunction.

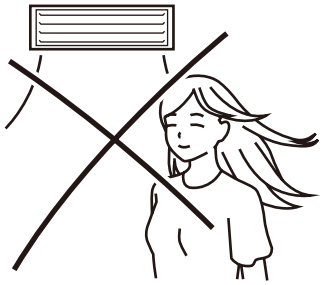

Avoid direct wind flow to people, pets, or plants.

- Expose to direct wind flow for extended period of time may have a negative impact on your health.

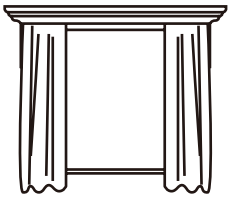

Close windows and blinds.

- The air conditioner can cool or warm the area with better efficiency.

Before Using

Remote Control (Inserting Battery)

1. Push and slide the back cover off the remote control.
2. Insert 2 LR03 AAA 1.5 v batteries into the battery compartment.
3. Reinstall the back cover to the remote control.

- After new batteries are inserted into the remote control, the display screen will lights up for 3 seconds. Leave it for 10 seconds, the display will automatically turn off.
- The default temperature unit will automatically turn into degree Fahrenheit. To change temperature unit, follow instruction on Page 59.

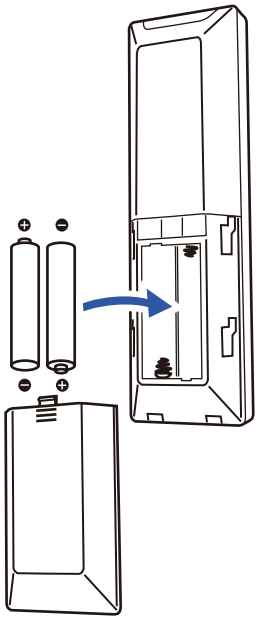

- Do not use rechargeable batteries.
- Replace the old batteries with new ones of the same type.
- Do not dispose batteries as unsorted municipal waste.

Remote Control (Remote Control Holder)

1. Attach the remote control holder to a wall by using the double sided adhesive tape or provided screws.
   NOTE: Wall anchor might needed if you install it on a dry wall.
2. Insert the remote control into the holder.

- Avoid exposing the remote control to direct sunlight.

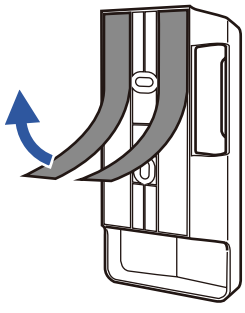

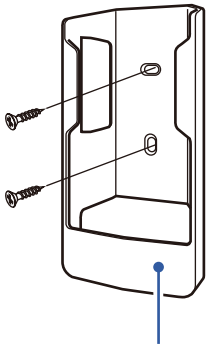

Remote Control Holder

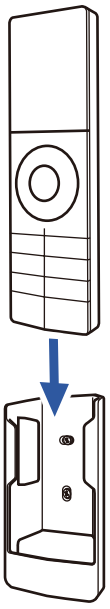


SET
ROOM
°F
h
DELLA

Just Right, Always.

Made to live with you, Della puts controls in your hands so that you can easily dail in a stress-free space that helps you feel more you.

Before Using

Remote Control

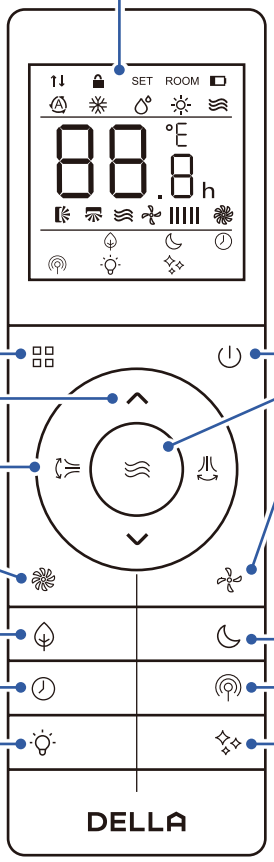

Display
Indicate operating status, temperature or timer setting

Mode Button
Select operation mode
Page 52

Increase / Decrease Button
Adjust temperature / timer setting

Air Flow Button
Control deflector & flaps to direct air flow
(Not functional for 048-DC series)

Turbo Button
Temporary boosting the air conditioner performance
Page 54

ECO Button
Enable the air conditioner to be more energy efficient
Page 55

Timer Button
Enable ON / OFF timer setting
Page 56

Display Button
Turn ON / OFF the indoor unit display
(Not functional for 048-DC series)

Power Button
Turn ON / OFF the air conditioner
Page 52

Fan Button
Select fan speed
Page 53

Quiet Button
Enable the air conditioner to run in quiet mode
Page 54

Sleep Button
Enable the air conditioner to operate a pre-set program suited for sleep time
Page 55

Vicinity Sensor Button
Let the air conditioner adjust temperature automatically according to the detected temperature around the remote control
Page 57

Self Clean Button
Enable the air conditioner to clean its internal parts
Page 58

Before Using

Remote Control

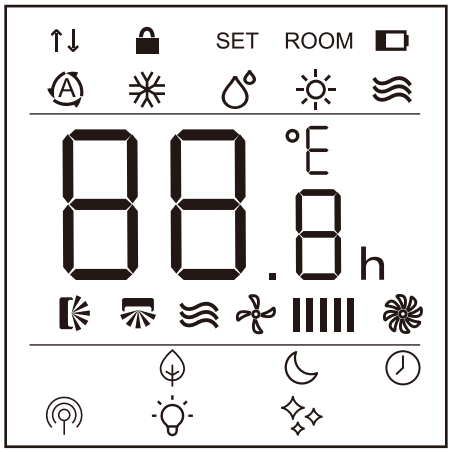

LED Indicator	Function
↑↓	Signal Indicator
	Child Lock
SET	Indicate Set Temperature
ROOM	Indicate Room Temperature
	Low Battery
A	Auto Mode
	Cool Mode
	Dehumidify Mode
	Heat Mode
	Fan Mode
88.8	Indicate Temperature Value
°F °C	Temperature Unit Degree Fahrenheit / Celsius

LED Indicator	Function
	Horizontal & Vertical Air Flow Indicator (Not functional for 048-DC series)
	Quiet Mode
	Fan Speed
	Turbo Mode
	Eco Mode
	Sleep Mode
	Timer
	Vicinity Sensor Mode
	Indoor Unit Display Indicator (Not functional for 048-DC series)
	Self Clean

Basic Operation

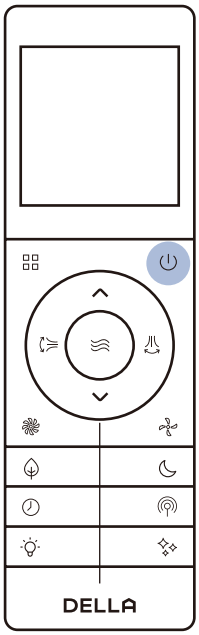

Power ON

Press ⏻ .

- The air conditioner will start operating.

Power OFF

Press ⏻ .

- The air conditioner will stop operating.

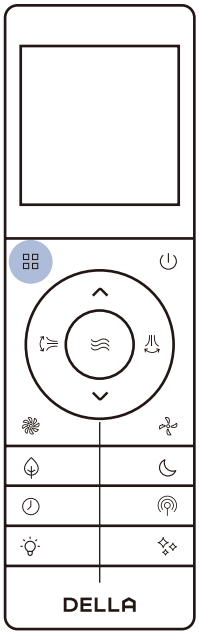

Select Operation Mode

Press ⊞ to select operation mode.

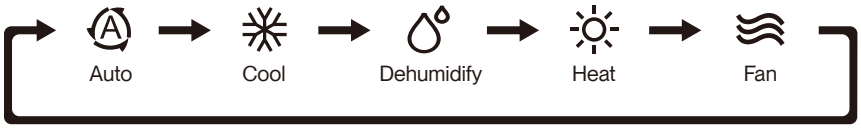

- It may takes a few minutes for the air conditioner to switch between modes.
- During Heat mode, the air conditioner can automatically activate defrost cycle, which is essential to remove frost on the condenser for heat exchange function. This procedure usually last for 2 - 10 minutes. When defrosting, indoor unit fan will stop operating. Once defrosting is completed, it will resume heat mode automatically.

Auto mode operation

Set temp. < Room temp.	Cool
Set temp. > Room temp.	Heat
Set temp. = Room temp. ± 1.8°F / 1°C	Fan

- Auto mode allows the AC to automatically select operation mode based on the above logic.
- Each mode will operate for at least 6 minutes before switching.
- Auto mode does not support sleep mode and eco mode operation.

Basic Operation

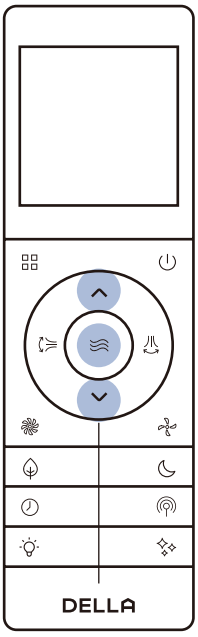

Adjust Temperature

Press ^ v to adjust temperature setting .

- Temperature setting will adjust by 1°F / 1°C increment for each time the button is pressed.
- Press and hold the buttons to adjust temperature continuously.
- Temperature can only be set between 61°F - 88°F / 16°C - 31°C.

Set Fan Speed

Press ≋ to select your desired fan speed.

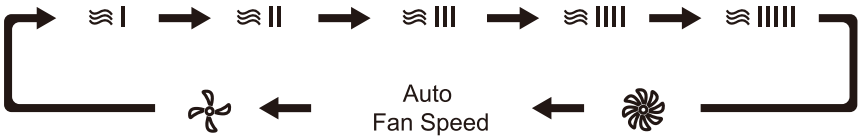

	Auto	Cool	Dehumidify	Heat	Fan
^ v Temperature Setting	61°F - 88°F / 16°C - 31°C				N/A
≋ Fan Speed	All Fan Speed	All Fan Speed	≋ I only	All Fan Speed	All Fan Speed

- The AC performs the best within operational ambient temperature.
- When the ambient temperature is too high, the AC may trip the circuit breaker protection and cause the system to shut down.
- When the ambient temperature is too low, the AC may generate excessive moisture, leading to water dripping from the outdoor unit.

	Indoor Temperature	Outdoor Temperature
Cool / Dehumidify Mode	63°F - 90°F / 17°C - 32°C	5°F - 131°F / -15°C - 55°C
Heat Mode	32°F - 80°F / 0°C - 27°C	-13°F - 86°F / -25°C - 30°C

Advance Function

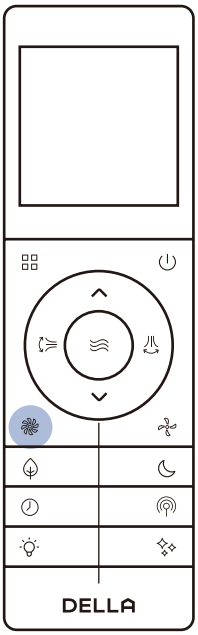

Turbo Mode

Using turbo mode can boost the air conditioner performance in a short amount of time.

Press .

- The air conditioner will operate in boosted fan speed.
- Turbo mode is not available when the air conditioner is operating in dehumidification mode.

To stop turbo mode, press again or press / / .

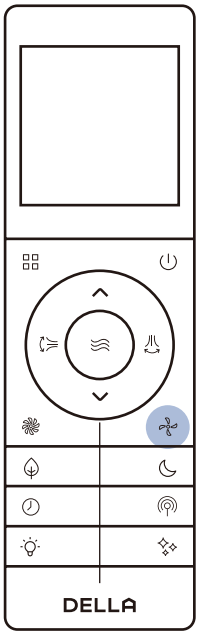

Quiet Mode

The air conditioner will operate at the minimum noise level under quiet mode.

Press .

- The air conditioner will operate in the lowest fan speed.
- Quiet mode is not available when the air conditioner is operating in dehumidification mode.

To stop quiet mode, press again or press / / .

Advance Function

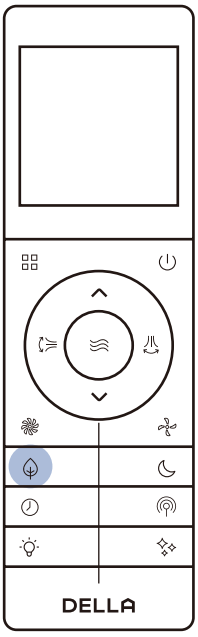

ECO Mode

The air conditioner will operate with maximum energy efficiency.

Press .

- ECO mode is only available when the air conditioner is operating in cool or heat mode.
- The set temperature for cool mode and heat mode will be limited.

Press again or set the temperature beyond the ECO mode limit to cancel ECO mode.

	ECO + Cool	ECO + Heat
Temperature Setting	79°F - 88°F / 26°C - 31°C	61°F - 77°F / 16°C - 25°C

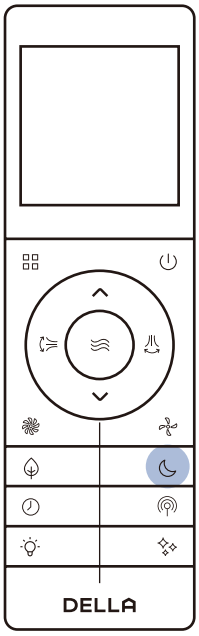

Sleep Mode

In sleep mode, the air conditioner will operate a pre-set program which is suitable during sleep.

Press .

- Sleep mode will operate for 10 hours and then switch back to previously set mode.
- Sleep mode is not available when the air conditioner is operating in auto, dehumidify or fan mode.

Press again to stop sleep mode.

Sleep mode operation

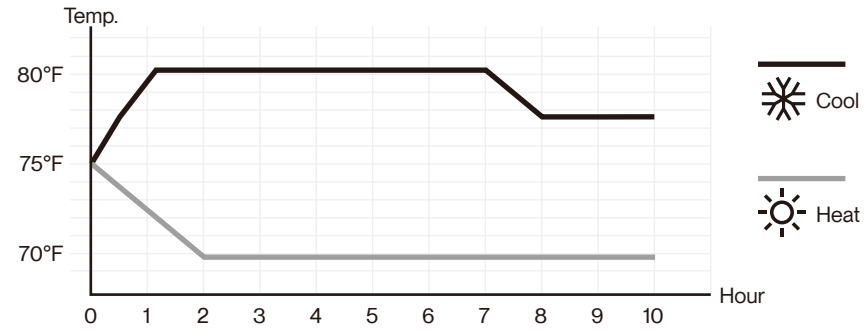

NOTE: This graph is for informational reference only. The actual product may changes temperature at a different rate depending on the initial set temperature in sleep mode.

Advance Function

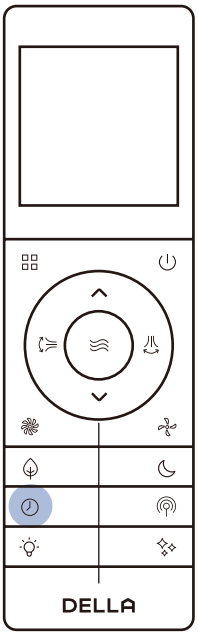

Timer Function (Shutdown Timer)

Set a timer to automatically turn OFF the air conditioner.

Press ⏲ when the air conditioner is ON.

Press ∧ ∨ to set the desired turn off time.

Press ⏲ to confirm the timer setting.

Timer Function (Start-up Timer)

Set a timer to automatically turn ON the air conditioner.

Press ⏲ when the air conditioner is OFF.

Press ∧ ∨ to set the desired turn on time.

Press ⊞ , ∧ ∨ and ≋ to select your desired operation mode, temperature setting, and fan speed for when the air conditioner is turn ON.

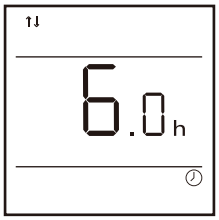

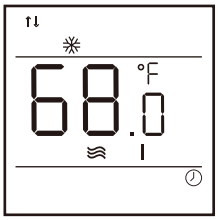

Press ⏲ to confirm the timer setting.

QUICK TIPS

- Both the shutdown and start-up timer can be set between 0.5 - 24 hours.

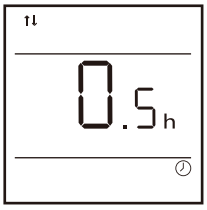

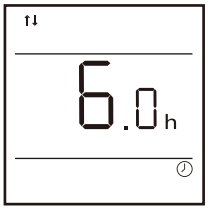

Timer default at 6 h

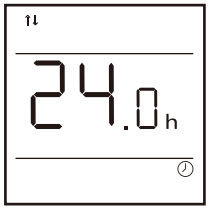

- While entering the setting, make sure to press the button within 5 seconds after the previous button was pressed. otherwise, the entire process will reset and you will have to start over.
-

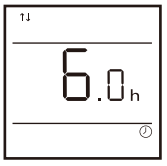

Timer Set

→ Press ⏲

→ Edit timer setting → Press ⏲ to confirm

→ Without pressing any button for 5 sec → Cancel timer

Advance Function

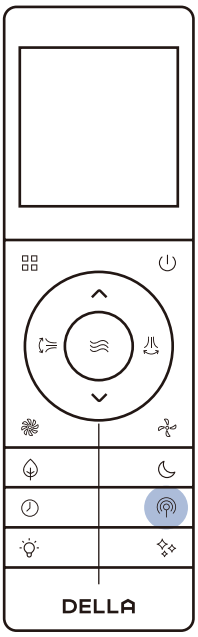

Vicinity Sensor

Vicinity sensor function turns your remote control into a portable thermostat that automatically controls the unit to adjust the temperature of the room you are in.

Press to activate vicinity sensor function.

Air conditioner would operate to match the detected temperature to the set temperature.



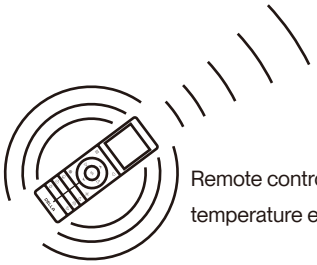

Remote control detect its surrounding temperature every 3 minutes for 8 hours.

NOTE: The remote control must be pointed towards the thermostat display to prevent lost of communication.

- In the case of the temperature detected by the remote control and the indoor unit thermostathas has a difference greater than 11 °F / 6 °C, the AC would use the temperature data from the indoor unit for temperature adjustment, instead of that from the remote control.

Press again to stop vicinity sensor function.

QUICK TIPS

- Both the remote control and the wall mounted thermostat supports vicinity sensor function.
- When the vicinity sensor function is enabled on the remote control, the AC will use the remote's sensor data; if it is enabled on the wall mounted thermostat, it will use the wall mounted thermostat's data. The AC will follows the last operated device for temperature adjustment.

Advance Function

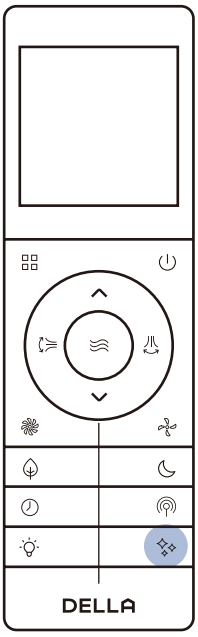

Self Cleaning

Self cleaning function allows the air conditioner to clean the interior parts and helps carry away the accumulated dirt, bacteria, etc. from the indoor evaporator.

Press when the air conditioner is OFF.

- The self cleaning function will run for 30 minutes, then it will return to the previously operating mode once it is finish.
- It is recommended to operate this function when the indoor ambient temperature is under 86°F / 30°C, and the outdoor ambient temperature is between 41°F - 86°F / 5°C - 30°C.
- It is suggested to run the self cleaning function once every 3 months.
- It is normal that the unit makes some noise during self cleaning process as plastic materials expand and contract with temperature change.

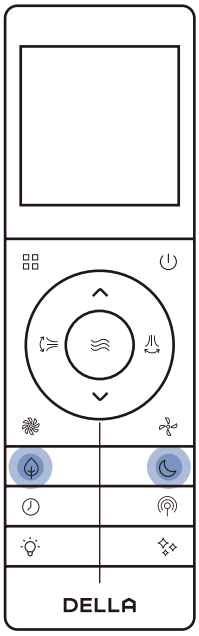

Child Lock

Child lock function will disable all input from the remote control until unlocked.

Press and hold and for 3 seconds to activate child lock.

- will display on the remote control display.

Press and hold and for 3 seconds again to dectivate child lock.

Advance Function

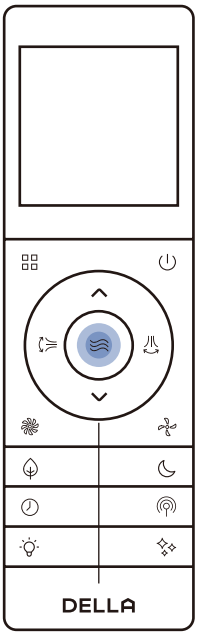

°F / °C

Press and hold for 5 seconds.

- The temperature unit will switch between °F and °C.

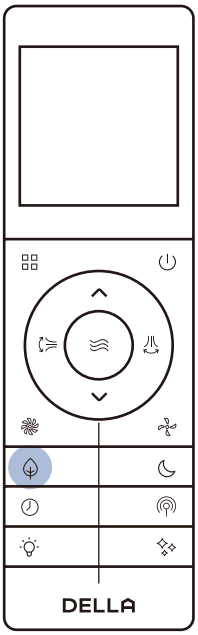

Forced Defrost

To maximize heat efficiency, you can force the outdoor unit to perform a defrost cycle before using heat mode.

In heat mode, press 10 times within 8 seconds.

- code will display on the indoor unit, and the AC will enter defrost cycle.

During the defrost cycle, your indoor unit will blow cold air temporarily.

Once the defrost cycle ends, the AC will automatically resume heat mode operation.

Before Using

Thermostat Display

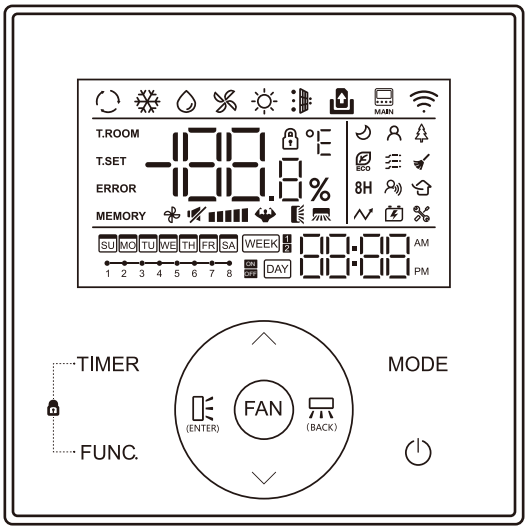

LED Indicator	Function
	Auto Mode
	Cool Mode
	Dry Mode
	Fan Mode
	Heat Mode
	Dirty Filter Indicator
	Door Card Indicator (Not functional for 048-DC series)
	Main IDU (Not functional for 048-DC series)
	Wi-Fi Indicator
T.ROOM	Display Showing Room Temperature
T.SET	Display Showing Set Temperature
ERROR	Display Showing Error Code

LED Indicator	Function
MEMORY	Power Down Memory
	Child Lock Indicator
	Fan Speed Indicator
	Horizontal & Vertical Air Flow Indicator (Not functional for 048-DC series)
	Sleep Mode
	Vicinity Sensor Mode
	Health Function
	Eco Mode
	Gentle Air Mode
	Self Clean
8H	8-Degree Heating Function
	Voice Command

Before Using

Thermostat Display

LED Indicator	Function
	Fresh Air Circulation
	Auxiliary Heat (Not functional for 048-DC series)
	Generator Function (Not functional for 048-DC series)
	Parameter Setting
	Indicating Week Day Timer Set
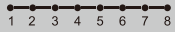	Indicating Hour Timer Set
	Indicating Week Timer
	Indicating Day Timer
	Timer ON / OFF Indicator
	Clock

Basic Operation

Power ON

Press (⏻).

- The air conditioner will turn on.

Power OFF

Press (⏻).

- The air conditioner will stop operating.

Select Operation Mode

Press (MODE) to select operation mode.

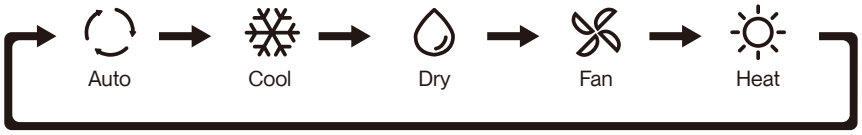

Adjust Temperature

Press (◯) to adjust temperature setting.

- The AC performs the best within operational ambient temperature.
- When the ambient temperature is too high, the AC may trip the circuit breaker protection and cause the system to shut down.
- When the ambient temperature is too low, the AC may generate excessive moisture, leading to water dripping from the outdoor unit.

	Indoor Temperature	Outdoor Temperature
Cool / Dehumidify Mode	63°F - 90°F / 17°C - 32°C	5°F - 131°F / -15°C - 55°C
Heat Mode	32°F - 80°F / 0°C - 27°C	-13°F - 86°F / -25°C - 30°C

Set Fan Speed

Press (FAN) to select your desired fan speed.

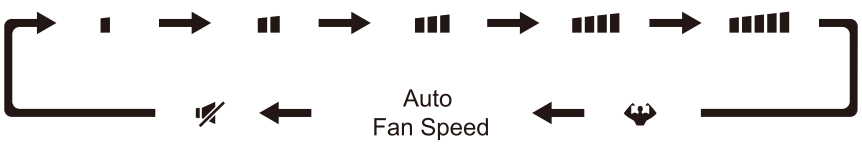

Advance Function

Sleep Mode

Press FUNC.



Press  until  blinks.



Press ENTER to confirm the selected mode / function.

- The air conditioner will operate in a pre-set program which is suitable during sleep.

Eco Mode

Press FUNC.



Press  until  blinks.



Press ENTER to confirm the selected mode / function.

- The air conditioner will operate with maximum energy efficiency.

Self Clean

Press FUNC.



Press  until  blinks.



Press ENTER to confirm the selected mode / function.

- The air conditioner will start self cleaning function.

Self cleaning function allows the air conditioner to clean the interior parts and helps carry away the accumulated dirt, bacteria, etc. from the indoor evaporator.

- The self cleaning function will run for 30 minutes, then it will return to the previously operating mode once it is finish.
- It is recommended to operate this function when the indoor ambient temperature is under 86°F / 30°C, and the outdoor ambient temperature is between 41°F - 86°F / 5°C - 30°C.
- It is suggested to run the self cleaning function once every 3 months.
- It is normal that the unit makes some noise during self cleaning process as plastic materials expand and contract with temperature change.

DELLA®

Advance Function

8 Degree Heating

Press (FUNC.).

↓

Press  until 8H blinks.

↓

Press (ENTER) to confirm the selected mode / function.

- The air conditioner will operate in heat mode when ambient temperature drop to or is blow 8°C.

Child Lock

Press (TIMER) and (FUNC.) for 3 seconds to activate child lock. will light up on the display.

To de-activate child lock, press (TIMER) and (FUNC.) for 3 seconds again.

Vicinity Sensor

Press (FUNC.).

↓

Press  until blinks.

↓

Press (ENTER) to confirm the selected mode / function.

- The air conditioner will adjust temperature based on the location the wall mounted thermostat is in.

QUICK TIPS

- Both the remote control and the wall mounted thermostat supports vicinity sensor function.
- When the vicinity sensor function is enabled on the remote control, the AC will use the remote's sensor data; if it is enabled on the wall mounted thermostat, it will use the wall mounted thermostat's data.
  The AC will follows the last operated device for temperature adjustment.

Advance Function

Parameter Setting

Press FUNC.



Press  until  blinks, press ENTER to enter parameter setting.



Press  to choose the parameter / function to set. The display will shows the function code as below:

Function Code	Function	Function Parameter	
P6	Temperature Unit Setting	°F	Degree Fahrenheit
		°C	Degree Celsius
PA	Ambient / Set Temperature	00	Set Temperature
		01	Ambient Temperature
PD	Thermostat button buzzer	ON	Buzzer On
		OFF	Buzzer Off
A8	Backlight Brightness	30 - 100	Brightness Percentage
B3	Air Filter Reminder	ON	Air Filter Reminder On
		OFF	Air Filter Reminder Off
B4	Clock Display Setting	12	12 Hour Format
		24	24 Hour Format



Press ENTER to enter function setting, then press  to change the setting.



Press ENTER to confirm setting.



Press  to exit parameter setting.

DELLA®

Advance Function

Timer Setting

Press TIMER and then  to choose the timer function setting.

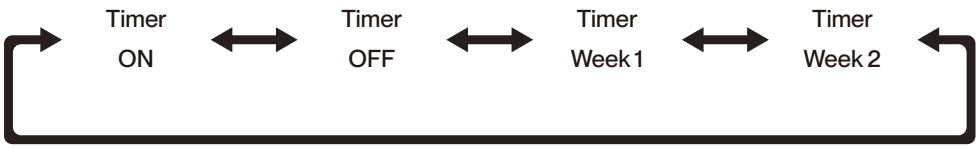

Week timer 1 allows you to schedule operation time for a week. The AC will turn-on and off on scheduled time with the same mode and temperature setting as the last time it was turned off.

Week timer 2 allows you to schedule operation time for a week. Week timer 2 also support operation mode, temperature setting,and fan speed customization through out the week.

Timer ON (Turn ON Timer)

Timer ON — ON Press ENTER to confirm.

↓

Set hour value. Press  to adjust, and ENTER to confirm.

↓

Set minute value. Press  to adjust, and ENTER to confirm.

Timer OFF (Shut OFF Timer)

Timer OFF — OFF Press ENTER to confirm.

↓

Set hour value. Press  to adjust, and ENTER to confirm.

↓

Set minute value. Press  to adjust, and ENTER to confirm.

Advance Function

Week Timer 1

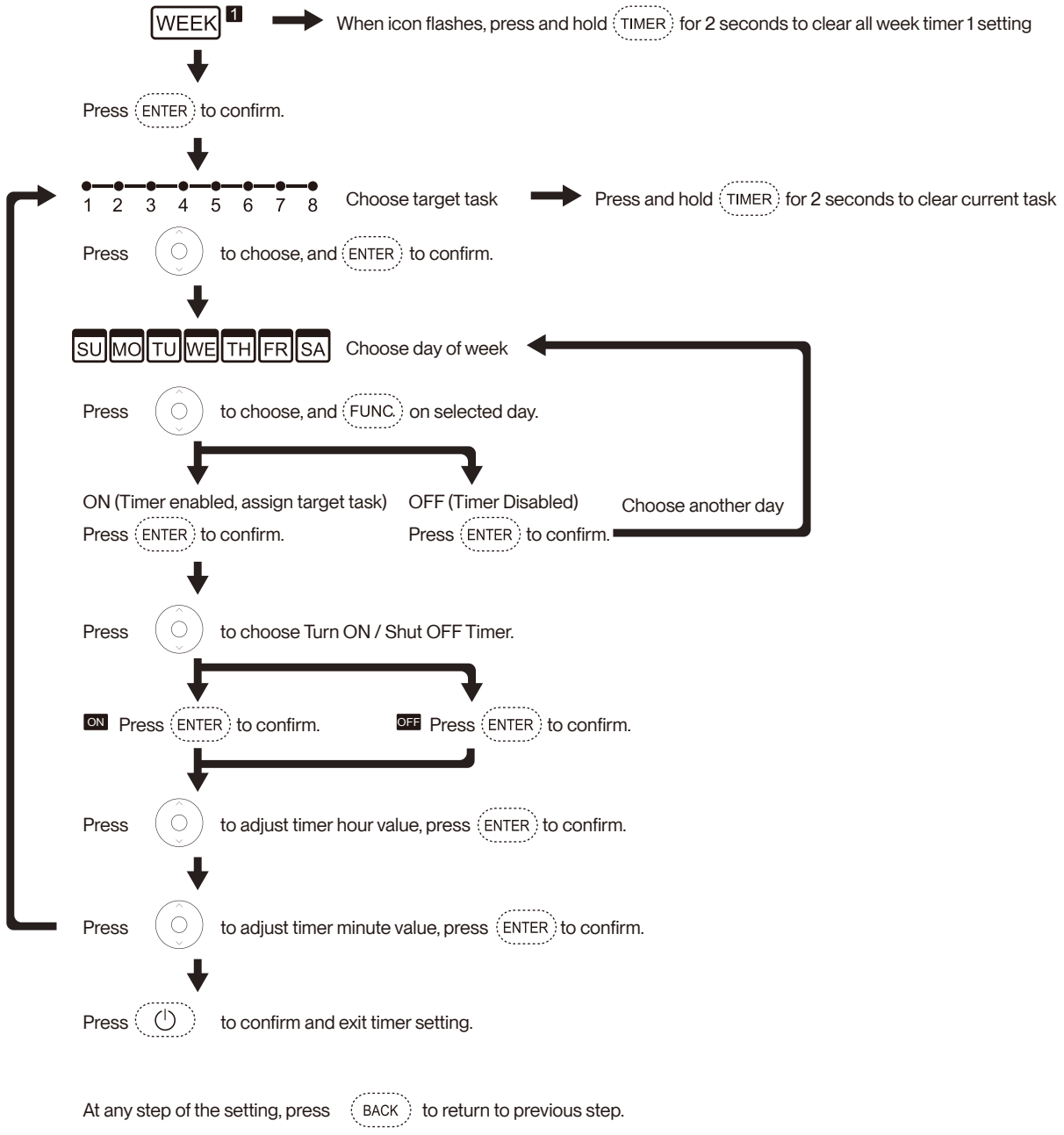

DELLA®

Advance Function

Week Timer 2

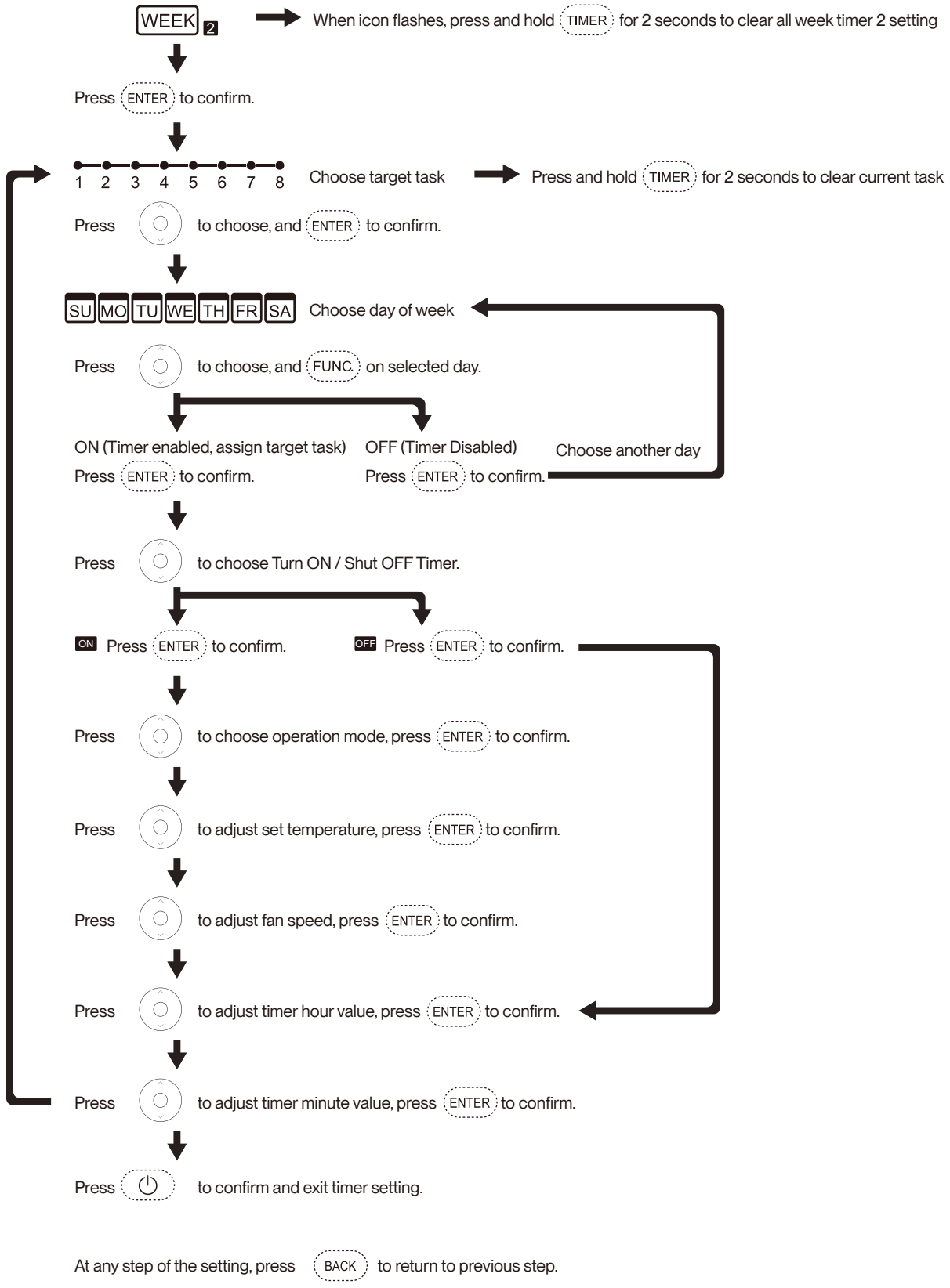

Advance Function

Real-Time Timer Setting

Press and hold TIMER for 2 seconds, and the timer display will blink and shows the day of the week.

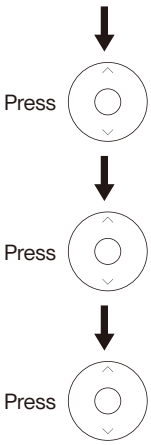

Press to select the day of the week, press ENTER to confirm.

Press to set hour value, press ENTER to confirm.

Press to set minute value, press ENTER to confirm.

At any step of the setting, press BACK to go back to the previous parameter setting.

Wi-Fi Reset

Press and hold MODE and ∧ for 3 seconds to reset wi-fi network for Della App pairing.

We work remotely, too.

The Della app combines smart technology with simple, user-friendly design, providing a seemless experience and endless customization. Automated smart features work behind the scenes to dialin your environment and improve your everyday, so you can focus on other, more interesting things.


DELLA
Custom Unit Name
Indoor 71°
70°
F
Outdoor 81°
Mode
Fan Speed
Sleep
Airflow
NORMAL
Schedule
Timer
More

Advance Function

Wi-Fi Set up

To set up the DELLA+ app to control your AC.

1. Search “DELLA+” on Apple app store or Google Play, or scan the QR code below to download the application.
2. Register an account in the app.
3. Follow the in app instructions to add and pair your Della AC to the app and complete the Wi-Fi set up. You can also scan the device QR code in the DELLA+ app for a quick device search.

DELLA+ App Download

Download on the App Store

GET IT ON Google Play

You can also scan the download QR code

Device QR code

Scan this QR code in your Della+ app to qucikly add device.

Household Set up (Optional)

Create and Join home to control your Della AC via the Della+ app from multiple devices and multiple accounts.

1. Click "Me" on the Della+ app.
2. Choose "Home Management".
3. Follow the in app instructions to create or join a home.

NOTE: Pairing your Della AC with a different account outside the household will remove the original pairing. Only one household can be paried at a time.

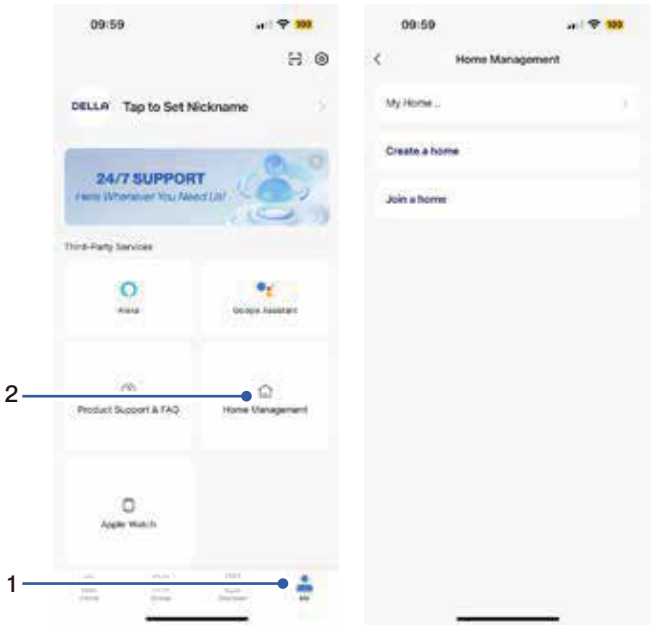

- The Della+ application is free, however, data charges may apply when downloading or using the application.
- Della+ can be altered without notice for quality improvement and also be deleted depending on the circumstances of manufacturing firms.
- All trademarks, logo, brand names are the property of their respective companies. Use of these names, brands, and trademarks does not imply endorsement. Della assumes no responsibility with regard to the performance or use of these products.

QUICK TIPS

Check out detailed tutorial on the most updated application on dellahome.com/support.

Advance Function

Refrigerant Sensor

- This unit is equipped with a refrigerant leak detector for safety and the unit must be electrically powered at all time after installaion for the sensor to work effectively and properly other than during servicing.
- The refrigerant sensor automatically detects the condition of the machine while in operation, and it will automatically start air flow circulation and stop the compressor if refrigerant concentration reaches a pre-set level.

048-DC-9K2V-IN
048-DC-12K2V-IN
048-DC-18K2V-IN

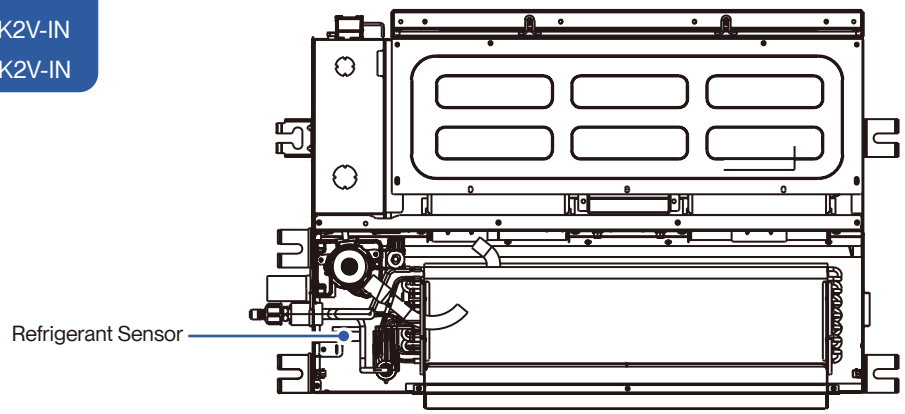

048-DC-24K2V-IN

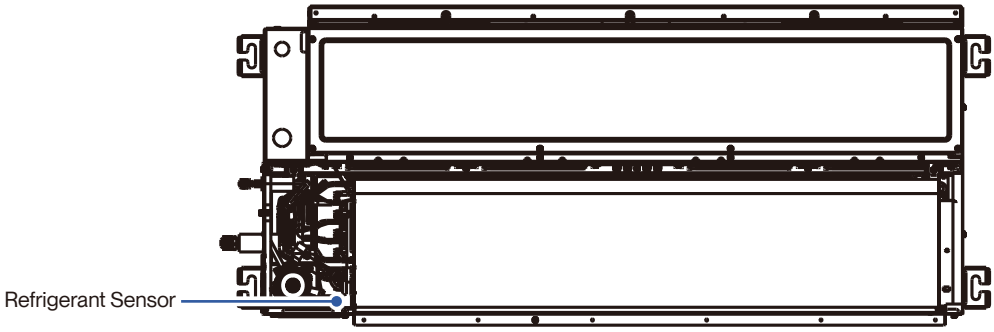

Error Code	Description
Hd	Refrigerant Leak Protection
Fd	Refrigerant sensor communication error

- An error code would displayed in the case of a leak detection.
- The refrigerant sensor has a lifespan of about 15 years and shuld be replaced within the range of its service life.
- The refrigerant sensor must be maintained by a professional and only specified sensor by the manufacturer should be replaced.

DELLA®

Operation

Operation Temperature

- The AC performs the best within operational ambient temperature.
- When the ambient temperature is too high, the AC may trip the circuit breaker protection and cause the system to shut down.
- When the ambient temperature is too low, the AC may generate excessive moisture, leading to water dripping from the outdoor unit.

	Indoor Temperature	Outdoor Temperature
Cool / Dehumidify Mode	63°F - 90°F / 17°C - 32°C	5°F - 131°F / -15°C - 55°C
Heat Mode	32°F - 80°F / 0°C - 27°C	-13°F - 86°F / -25°C - 30°C

Preheat

- The indoor unit heat exhanger could preheat for 2 - 5 minutes at the beginning of HEAT mode operation.

Defrost

- The air conditioner can automatically enters defrost mode when operating in HEAT mode. This procedure may last 2 - 10 minutes.
- During defrosting, the indoor unit fan will stop spinning. Once the defrost cycle ends, the air conditioner will automatically resume HEAT mode operation.

Other Operation Requirements

- When the air temperature is below 5°F / -15°C, the air conditioner needs to be powered on for 2 hours before operation.
- Do not cut off power supply within 1 day of powering off the air conditioner. (It is necessary to have power to the crankcase heater to prevent the compressor from a force start)

Care and Maintenance

CAUTION

- Before cleaning the unit, you must shut down the machine and cut off the power supply for at least 5 minutes.
- Never flush the air conditioner with water.

Clean the Air Outlet and Air Return WIndow

1. Remove any possible debris on the air outlet and air return windows to prevent obstruction.

Clean the Air Filter

1. Remove the air-return grill from the air conditioner.
2. Clean the air filter with soapy water.
3. Air dry the air filter.
4. Put the air return grill and air filter back to its original position after it is dry.

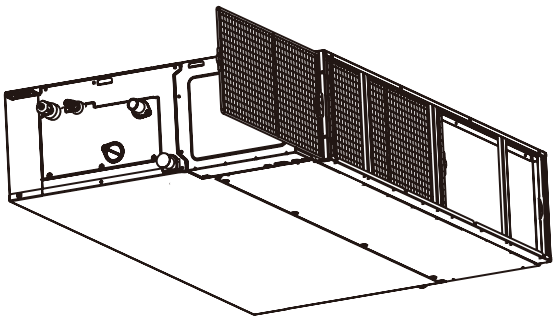

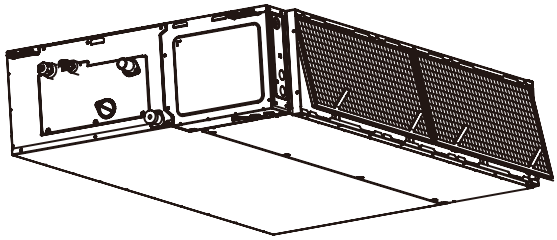

- Do not touch the componants inside the indoor unit with bare hands after removing the filter screen.
- Check and clean the air filter regularly to prevent dust accumulation.
- Clean the air filter frequently if the operating environment is dusty or has bad air quality.

DELLA®

Care and Maintenance

Maintenance Routine

- Clean the air filter screen every 3 months.
- Use the self clean function to clean the indoor unit every 3 months.
  Page 58 / 63
- Call your HVAC technician to check on the refrigerant level every 3 - 4 years.
- Regularly check and remove any obstacles from the outdoor unit.

Planning to Not Operate the Air Conditioner for a Long Period

- Take out the batteries from the remove control and disconnect the power supply of the air conditioner.

Using the Air Conditioner After a Long Idle Period

- Clean the unit and the air filter screen.
- Remove any obstacles at the air inlet and outlet of both the indoor and outdoor unit.
- Make sure drain pipe is unobstructed.
- Install batteries into the remove control and connect the power supply to the air conditioner.

Troubleshooting

Before consulting repair or warranty, please check the following troubleshooting guide.
In the case of an persistent problem, contact a qualified technician for diagnosis and repair.

WARNING

- When encountering persisting problem, stop operation and turn off the breaker. Continue operation in an abnormal condition may cause electric shock, fire, or damage to the unit.
- Do not attempt to repair or modify the unit by yourself. Incorrect work may result in electric shock, fire or injury.

Problem	Possible Cause / Explanation / Solution
The appliance is non operational	When pressing the power button soon after operation was stopped - Protective delay switch will delay the operation for 3 - 5 minutes if the air conditioner is turned on immediately after it is turned off.
	When switching between operation modes - The internal protection is activated, wait for a few minutes for the AC to resume normal operation.
	The unit is currently has a turn ON timer activated.
	The circuit breaker is tripped. Reset the circuit breaker.
	Faulty electric connection, mismatch outlet voltage, or damaged electronic control board. Contact a qualified technician.
The appliance suddenly stopped during operation	An internal protection tripped after a sudden voltage fluctuation. Check the circuit breaker and reset if necessary.
	The environment temperature is too high or too low.
	The AC automatically activate de-frost process. This is not a malfunction.
	Air filter is too dirty. Clean the air filter.
	Some objects are obstructing air inlet or outlet of the indoor and / or the outdoor unit. Remove the obstructing object.
Strange odor from the air flow	Air filter is too dirty. Clean the air filter.
	The smells of the room, furniture, or cigarettes are absorbed into the unit and then discharged. Remove odorous objects from the room.
Strange Noise	In the case of water flowing noise - The noise may caused by the refrigerant flow, or the internal water flow during cold / dry mode. This is not a malfunction.
	In the case of plastic cracking noise - The noise may caused by the thermal expansion.

DELLA®

Troubleshooting

Problem	Possible Cause / Explanation / Solution
Mist comes out from the air outlet	This occurs when the air in the room becomes cold in cool or dry mode. This does not indicate a problem.
No cool air in cold mode	When switching between operation modes - The internal protection is activated, wait for a few minutes for the AC to resume normal operation.
	Check and make sure the temperature setting is below the environment temperature.
No warm air in heat mode	When switching between operation modes - The internal protection is activated, wait for a few minutes for the AC to resume normal operation.
	Check and make sure the temperature setting is below the environment temperature.
	The AC automatically activate de-frost process. This is not a malfunction. Wait 2 - 10 minutes for the AC to complete defrosting.
	Frost built up on the outdoor unit. If the AC does not automatically activate de-frost process, force defrost process following instruction on page 50.
Insufficient air flow, either cold or hot	Some objects are obstructing air inlet or outlet of the indoor and / or the outdoor unit. Remove the obstructing object.
	Other heat source of heat in the room. Remove the heat source.
	The fan speed is set to minimum. Try to set at a higher fan speed.
The unit does not respond to the remote control commands	Remote Control is too far away from the indoor unit.
	There is an obstruction between the remote control and the indoor unit.
	The battery power has run out in the remote control. Replace the battery.
	Child lock function is activated. Deactivate child lock on the remote control.
The display on the indoor unit is not lit	The display is set to off on the remote control. Use the remote control to turn it on.
	Power failure. Check the power supply / circuit breaker.
Water dripping from the outdoor unit	The indoor unit internal is too dirty and clogged the drainage port. Contact qualified technician for cleaning.
	Condensation formed on the uninsulated drainage hose / refrigerant pipe in the line set. Contact qualified technician to properly insulate the water hose / refrigerant pipes.
	Improper drainage hose installation.

Troubleshooting

WARNING

Switch off the air conditioner immediately and cut off the power supply in the event of:

- Strange, loud noises during operation.
- Faulty electronic control board.
- Faulty fuses or switches.
- Spraying water or objects inside the appliance.
- Frequent circuit breaker tripped during operation.
- Abnormally hot or damaged power cord or plug.
- Very strong smells discharging from the appliance.

Error Code

Error Code	Description
E0	Indoor and outdoor communication failure
E1	Indoor ambient temperature sensor failure
E2	Indoor fancoil temperature sensor failure
E3	Outdoor fancoil temperature sensor failure
E4	Abnormal system malfunction (lack of fluroine)
E5	Model configuration error
E6	Indoor PG/DC fan failure
E7	Outdoor ambient temperature sensor failure
E8	Outdoor exhaust temperature sensor failure
E9	Outdoor IPM module failure / Compressor drive failure
EA	Outdoor current sensor failure
Eb	PCB and display screen communication failure
EC	Outdoor modules communication failure

DELLA®

Troubleshooting

Error Code	Description
EE	Outdoor EEPROM fault
EF	Outdoor DC fan failure
EH	Outdoor compressor top failure
EU	Outdoor voltage sensor failure
Ej	Outdoor central coil temperature sensor failure
En	Outdoor air pipe temperature sensor failure
Ey	Outdoor liquid pipe temperature sensor failure
P0	IPM module protection
P1	Overvoltage and undervoltage protection
P2	Overcurrent protection
P3	Other protections
P4	Protection against excessive outdoor exhaust temperature
P5	Cooling protection against overcooling
P6	Cooling and anti overheating protection
P7	Heating and anti overheating protection
P8	Protection against high or low outdoor temperature
P9	Compressor drive protection (abnormal load)
PA	Communication failure / Mode conflict

Troubleshooting

Error Code	Description
F0	Infrared human sensing sensor failure
F1	Battery module failure
F2	Exhaust temperature sensor failure protection
F3	Failure protection of outer tuber temperature sensor
F4	Abnormal protection of refrigerant circulation
F5	PFC protection
F6	Compressor missing / Reverse phase protection
F7	Module temperature protection
F8	Abnormal commnication of 4-way valve
F9	Module temperature sensor circuit malfunction
FA	Compressor phase current detection fault
Fb	Cooling and heating overload protection limit frequency reduction
FC	High power protection limit / Frequency reduction
FE	Module current (compressor phase current) protection limit / Frequency reduction
FF	Drive protection limit / Frequency reduction
FH	Drive protection limit / Frequency reduction
FP	Anti condensation protection limit / Frequency reduction
FU	Anti freezing protection limit / frequency reduction
Fj	Exhaust protection limit / Frequency reduction
Fn	External AC current protection limit / frequency reduction

DELLA®

Troubleshooting

Error Code	Description
Fy	Fluorine deficiency protection
H1	High pressure switch malfunction
H2	Low pressure switch malfunction
bf	TVOC sensor failure
bc	PM2.5 sensor failure
bj	Humidity sensor failure
bE	CO2 sensor malfunction
bd	Fresh air fan failure
d4	Water full protection
d5	Access control protection
Hd	Refrigerant Leak Protection
Fd	The communication of the refrigerant sensor is abnormal

Troubleshooting

Error codes shown on the air conditioner display panel only indicates communication problems between parts.
For technicians attempt to identify the exact problematic parts or componants, visit our page on
dellahome.com/optima-tph-r454b-troubleshooting for detailed model specific diagnostic handbook.



dellahome.com/optima-tph-r454b-troubleshooting

Disposal Guideline

This appliance contains refrigerant and other potentially hazardous materials. When disposing of the appliance, follow all federal, state, and local regulations. DO NOT dispose of this product as normal household waste or unsorted municipal waste.

When disposing of this appliance, you have the following options:

- Dispose of the appliance at a designated municipal electronic waste collection facility.
- When buying a new appliance, the retailer will take the old appliance.
- The manufacturer may take back the old appliance.
- Sell the appliance to a certified scrap metal dealer.

DELLA®

Warranty

QUICK TIPS

Scan the QR code or visit our page on **dellahome.com/pages/warranty** to sign up for warranty coverage on your new DELLA appliance.

dellahome.com/pages/warranty

Compliance Information

Radio Frequency Interference



Model: 048-DC series

ID: 2ANDL-TCWBRCU1

FCC Caution

This device complies with part 15 of the FCC Rules. Operation is subject to the following two conditions:

(1) This device may not cause harmful interference, and (2) this device must accept any interference received, including interference that may cause undesired operation. Any changes or modifications not expressly approved by the party responsible for compliance could void the user's authority to operate the equipment.

NOTE: This equipment has been tested and found to comply with the limits for a Class B digital device, pursuant to Part 15 of the FCC Rules. These limits are designed to provide reasonable protection against harmful interference in a residential installation. This equipment generates, uses and can radiate radio frequency energy and if not installed and used in accordance with the instructions, may cause harmful interference to radio communications. However, there is no guarantee that interference will not occur in a particular installation. If this equipment does cause harmful interference to radio or television reception, which can be determined by turning the equipment off and on, the user is encouraged to try to correct the interference by one or more of the following measures:

- Reorient or relocate the receiving antenna.
- Increase the seperation between the equipment and receiver.
- Connect the equipment into an outlet on a circuit different from that to which the receiver is connected.
- Consult the dealer or an experienced radio / TV technician for help.





www.dellahome.com
support@dellahome.com
800–863–4143
6:00 a.m. – 4:00 p.m. PST Monday – Friday

© Della All rights reserved.

The design and specifications are subject to change without prior notice for product improvement. Any updates to the manual will be uploaded to the della website.