DELLA®

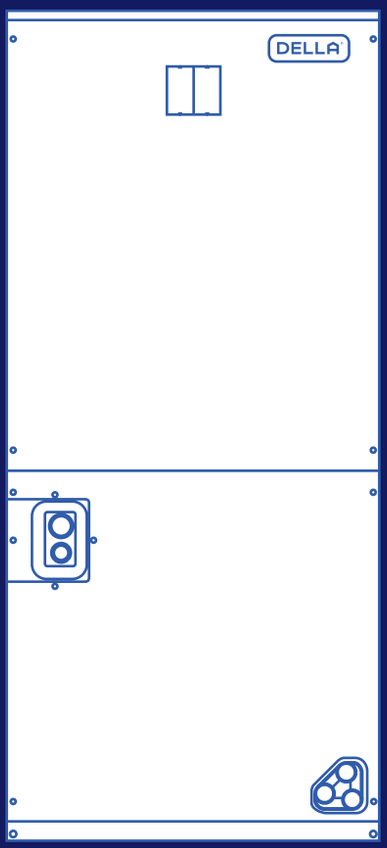

Central AC (T) Series

Air Handler

Instruction Manual
Installation and Operation Guide

Table of Content

Before Installation

Warning and Safety 04

Installation

Installation Location 12
Appliance Orientation 13
Refrigerant Line Connection 18
Drain Pipe Connection 19
Electrical Wiring 20
Duckwork 27
Air Filter 28
Auxiliary Heater 32

System Info

DIP Switch 36
Indicating Light 39

Having Problems?

Troubleshooting 40

DELLA®

Warning and Safety

- Read this guide before installation. Failure to follow the safety instructions may result in property damage, serious injury, or death.
- Please Keep this manual.

DANGER

Danger:
Indicates an IMMINENTLY hazardous situation that, if not avoided, will result in death, serious injury, or serious property damage.

WARNING

Warning:
Indicates an POTENTIALLY hazardous situation that, if not avoided, will result in death, serious injury, or serious property damage.

CAUTION

Caution:
Indicates an POTENTIALLY hazardous situation that, if not avoided, will result in minor to moderate injury. It may also be used to indicate unsafe practice.

Attention:
Pay additional attention to the instruction.

DO NOT:
Indicates prohibited actions and / or practice.

About Refrigerant

DANGER

- The air conditioner is pre-charged with R454B refrigerant. Handle the air conditioner with care and check if there is any refrigerant leakage during installation. Refrigerants have no odor and can be toxic and flammable. Rapid evaporation of refrigerant may cause frostbite, cardiac arrhythmia, and / or irritation, as well as cause environmental damage.
- In the case of refrigerant leakage, shut down the appliance and disconnect from the power supply. An inspection must be performed by a qualified technician.

Additional Information About R454B Refrigerant

WARNING

- The installation and service of pipe work and appliances containing R454B refrigerant shall be performed by a qualified and licensed technician.
- When installing or using the appliance with R454B refrigerant, beware of the following symbols.



- This symbol means this appliance uses a flammable refirgerant.
  If the refrigerant is leaded and exposed to an external ignition source, there is a rist of fire.



- This symbol means that read the operation insturction carefully.



- This symbol means that personnel handling the equipment should reference to the installation manual.



- This symbol means information is available in the installation or operation instruction manual.

- Length and area limitation and recommendation should be followed. Store and install the appliance in rooms which size corresponds to the room area as specified for operation.
- The length of pipe work should be kept at minimum.
- Pipe work should be protected from physical damage and installed in floor area larger than 4m².
- All national, state, and local regulations on handling and installing R454B refrigerant should be followed.
- Do not install or store the compressor in area or room with continuously operating ignition sources.
- Prior to any work and servicing on systems containing flammable refrigerant, safety checks are necessary to ensure that the risk of ignition is minimized.

Warning and Safety

Additional Information About R454B Refrigerant

WARNING

- All individuals in the proximate area shall be instructed on the nature of work being carried out. Work in confined spaces shall be avoided. The area around the workspace shall be sectioned off. Ensure that the conditions within the area have been made safe by controlling flammable materials.
- The work area shall be checked with refrigerant detector prior to and during work to ensure the technician is aware of potentially flammable atmospheres.
- If any hot work is to be conducted on the refrigerantion equipment or any associated parts, appropriate fire extinguishing equipment shall be available to hand.
- Personnel carrying out work in relation to the refrigeration system which involves exposing any pipe work shall not use any sources of ignition in such a manner that it may lead to the risk of fire or explosion. All possible ignition sources, including cigarette, should be kept sufficiently far away from the site of work. The area around the equipment should be surveyed prior to work to make sure there are no flammable hazards or ignition risk, “NO smoking” sign shall be displayed.
- Ensure the work area is in the open or that it is adequately ventilated before breaking into the system or conducting any work that will produce heat. A degree of ventilation shall be kept during the period which work or service is carried out.
- During installation or repairs to sealed components, all electrical supplies shall be disconnect from the equipment. A permanent operating leak detection shall locate at the work area to detect potential hazardous leaks.
- The followings checks shall be applied to installation using flammable refrigerants:
  - The refrigerant charge amount is in accordance with the room size within which the refrigerant containing parts are installed.
  - The ventilation machinery and outlet are operating adequately and are not obstructed.
  - If an indirect refrigerating curcuit is being used, the secondary circuit shall be check for the presence of refrigerant.
  - Refrigerant pipe or components are installed in a position where they are unlilely to be exposed to any substance which may corrode refrigerant containing components, unless the components are constructed of materials which are inherently resistant to being corroded or are suitable protected against being corroded.
- Detection of flammable refrigerants:
  - Under no circumstances shall potential sources of ignition be used in the searching for or detection of refrigerant leaks. A halide torch or any other detector using naked flame shall not be used.
  - Electronic leak detectors shall be used to detect flammable refrigerant. Ensure that the detector is not a potential source of ignition and is suitable for the refrigerant used.
  - Leak detection equipment shall be calibrated to the refrigerant employed and the appropriate percentage of gas (25% maximum) is confirmed.
  - Leak detection fluids are suitable for use with most refrigerants, but the use of detergents containing chlorine shall be avoided as chlorine may react with the refrigerant and corrode the pipe work.
  - If a leak is suspected, all open flame shall be removed or extinguished.
  - If a leakage of refrigerant found which requires brazing, all of the refrigerant shall be recovered from the system, or isolated (by means of shut off valves) in a part of the system remote from the leak.
  - Oxygen free nitogen shall be purged through the system both before and during the brazing process.
- Decommissioning and recovery of refrigerants:
  - Refrigerant charge shall be recovered into recovery cylinders, All refrigerant recovery procedure shall follow local and national regulations. Oxygen free nitrogen shall be purged through the system after refrigerant recover.
  - When decommissioning the appliance, it is recommended that all refrigerants are recovered. The system should be isolated electrically, and recovered refrigerant should not be charged into another refrigeration system unless it has been analized to be safe to do so.
  - Equipment that once contains flammable refrigerant shall be labeled when decommissioning. The label shall be dated and signed.

Warning and Safety

Additional Information About R454B Refrigerant

WARNING

- In UL/CSA 60335-2-40, R454B refrigerant is classified as class A2L, which is mildly flammable. Therefore, R454B refrigerant is suitabe for system needing additional refrigerant charge and which will limit the area of rooms being served by the system. Similarly, the total amount of refrigerant in the system shall be less than or equal to the allowable maximum refrigerant charge. The allowable maximum refrigerant charge depends on the area of the rooms being served by the system.
- For R454B refrigerant, the maximum charge in a room shall be in accordance with the following:
  - $M_{max} = SF \times LFL \times h_0 \times A$
- Or the minimum floor area A_{min} to install an appliance with refrigerange M_c (kg) shall be in accordance with:
  - $A_{min} = M_c / (SF \times LFL \times h_0)$
    - M = Mass
    - M_{max} = Maximum charge mass
    - M_c = Mass charged
    - A = Floor area
    - LFL = Lower Flammable Limit, for R454B LFL is 0.296 kg / m^3
- Room area calculation requirements:
  - The space considered shall be any space which contains refrigerant-containing parts or into which refrigerant could be released. The floor area (A) of the smallest, enclosed occupied space shall be used in the determinaiton of refrigerant.
  - For determination of floor area (A) when used to calculate the refrigerant charge limit, the following shall apply:
    - The floor area (A) shall be defined as the room area enclosed by the projection to the base of the walls, partitions and doors of the space in which the appliance is installed.
    - Space connected by only drop ceilings, ductwork, or similar connections shall not be considered as a single space. Unit mounted higher than 70 $^{55}/_{64}$ inches and spaces divided by partition walls that are no higher than 62 $^{63}/_{64}$ inches shall be considered a single space.
    - Rooms on the same floor and connected by an open passageway between the space can be considered a single room when determining compliance to A_{min}, if the passageway complies with all the followings:
      1. It is a permanent opening.
      2. It extends to the floor.
      3. It is intened for people to walk through.
    - The area of the connected rooms, on the same floor, connected by permanent opening in the walls and / or doors between occupied space, including gaps between the wall and the floor can be considered a single room when determining compliance to A_{min}, provided all of the following conditions are met as [Fig 1-1].
      - Low level opening:
      1. The opening shall not be less than Anv_{min} in [Table 1-1].
      2. The area of any opening above 11 $^{13}/_{16}$ inches from the floor shall not be cinsidered in determining compliance with Anv_{min}.
      3. At least 50% of the opening area of Anv_{min} shall be below 7 $^{7}/_{8}$ inches from the floor.
      4. The bottom of the opening is not more than 3 $^{15}/_{16}$ inches from the floor.
      5. The opening is a permanent opening that cannot be closed.
      6. For openings extending to the floor the height shall not be less than $^{25}/_{32}$ inches above the surface of the floor covering.

Warning and Safety

Additional Information About R454B Refrigerant

WARNING

- High level opening:

1. The opening shall not be less than 50% of Anv_{min} in [Table 1-2].
2. The opening is a permanent opening that cannot be closed.
3. The opening shall be at least 59 inches above the floor.
4. The height of the opening is not less than $^{25}/_{32}$ inches.

- Room size requirement:

1. The room into which refrigerant can leak, plus the connected adjacent room(s) shall have a total area not less than A_{min}. A_{min} is shows in [Table 1-4].
2. The room area in which the unit is installed shall not be less than 20% A_{min}. A_{min} is shows in [Table 1-4].

- The requirement for the second opening can be met by drop ceiling ventilation ducts, or similar arrangements that provide an airflow path between the connected rooms.
- The minimum opening for natural ventilation (Anv_{min}) in connected rooms is related to the floor area (A). The actual refrigerant charge in the system (M_c), and the allowable maximum refrigerant charge in the system (M_{max}). Anv_{min} can be determined according to [Table 1-2].

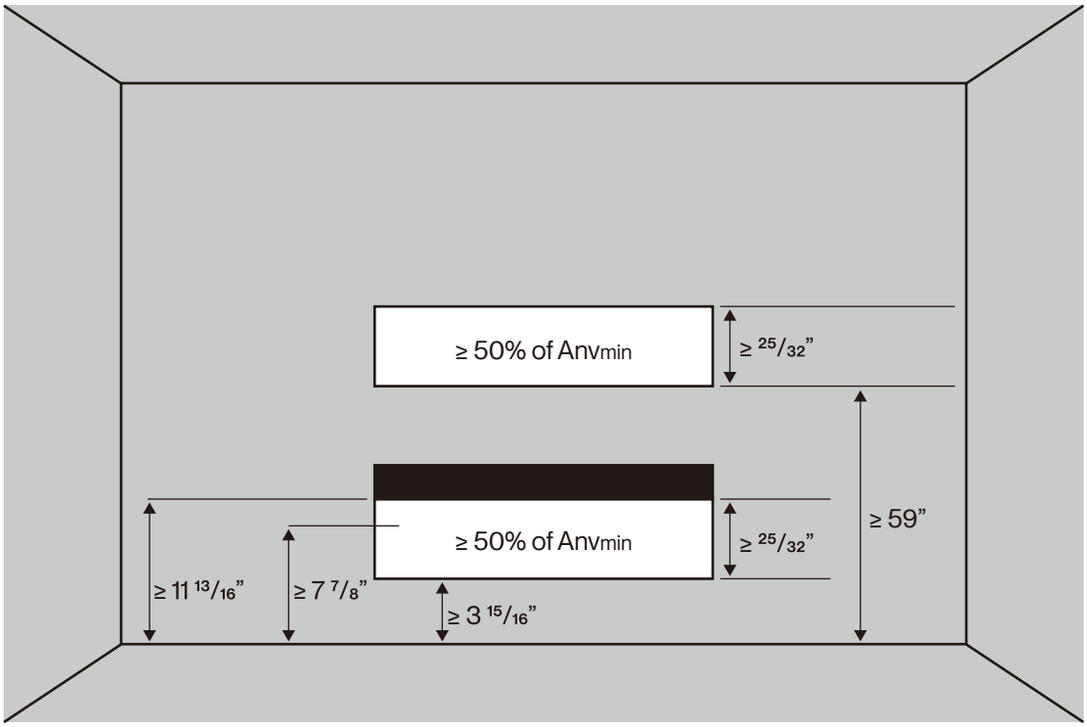

Fig 1-1 Opening Requirement for Connected Rooms

Warning and Safety

Additional Information About R454B Refrigerant

WARNING

A (sq. ft)	M_c (lb oz)	M_{max} (lb oz)	An_{vmin} (sq ft)
40	9lb 9oz	2lb 10oz	0.9
50	9lb 9oz	3lb 5oz	0.8
60	9lb 9oz	4lb 0oz	0.7
70	9lb 9oz	4lb 10oz	0.6
80	9lb 9oz	5lb 5oz	0.6
90	9lb 9oz	6lb 0oz	0.5
100	9lb 9oz	6lb 10oz	0.4
110	9lb 9oz	7lb 5oz	0.3
120	9lb 9oz	8lb 0oz	0.2
130	9lb 9oz	8lb 10oz	0.2
140	9lb 9oz	9lb 5oz	0.1
150	9lb 9oz	10lb 0oz	0.0
160	9lb 9oz	10lb 10oz	0.0

Table 1-2 The Minimum Opening Area for Connected Rooms

- For appliances serving one or more rooms with an air duct system, the floor area calculation shall be determined based on the total area of the conditioned space connected by ducts. Taking into consideration that the circulating airflow distributed to all the rooms by the appliance integral indoor fan will mix and dilute the leaking refrigerant before entering any room.
- The allowed maximum refrigerant charge and required minimum floor area:
  - If the fan incorporated to an appliance is continuously operated or operation is initiated by a refrigerant detection system with a sufficient circulation airflow rate. The allowable miximum refrigerant charge (M_{max}) and the required minimum floor area (A_{min} / TA_{min}) is shown in [Table 1-3] and [Table 1-4]

A / TA (sq. ft)	M_{max} (lb oz)	A / TA (sq. ft)	M_{max} (lb oz)
40	2lb 10oz	160	10lb 10oz
50	3lb 5oz	170	11lb 5oz
60	4lb 0oz	180	12lb 0oz
70	4lb 10oz	190	12lb 10oz
80	5lb 5oz	200	13lb 5oz
90	6lb 0oz	210	14lb 0oz
100	6lb 10oz	220	14lb 10oz
110	7lb 5oz	230	15lb 5oz
120	8lb 0oz	240	16lb 0oz
130	8lb 10oz	250	16lb 10oz
140	9lb 5oz	260	17lb 5oz
150	10lb 0oz		

Table 1-3 The Allowable Maximum Refrigerant Charge

Warning and Safety

Additional Information About R454B Refrigerant

WARNING

M_c (lb oz)	A_{min} / TA_{min} (sq. ft)	M_c (lb oz)	A_{min} / TA_{min} (sq. ft)
4lb 6oz	66.1	11lb 0oz	165.3
4lb 13oz	72.7	11lb 7oz	171.9
5lb 4oz	79.3	11lb 14oz	178.5
5lb 11oz	86.0	12lb 5oz	185.1
6lb 2oz	92.6	12lb 12oz	191.7
6lb 9oz	99.2	13lb 3oz	198.4
7lb 0oz	105.8	13lb 10oz	205.0
7lb 7oz	112.4	14lb 1oz	211.6
7lb 15oz	119.0	14lb 8oz	218.2
8lb 6oz	125.6	14lb 15oz	224.8
8lb 13oz	132.2	15lb 6oz	231.4
9lb 4oz	138.8	15lb 14oz	238.0
9lb 11oz	145.5	16lb 5oz	244.6
10lb 2oz	152.1	16lb 12oz	251.2
10lb 9oz	158.7	17lb 3oz	257.9

Table 1-4 The Required Minimum Floor Area

M_c (lb oz)	Q_{min} (CFM)	M_c (lb oz)	Q_{min} (CFM)
4lb 6oz	119	11lb 0oz	298
4lb 13oz	131	11lb 7oz	310
5lb 4oz	143	11lb 14oz	322
5lb 11oz	155	12lb 5oz	334
6lb 2oz	167	12lb 12oz	346
6lb 9oz	179	13lb 3oz	358
7lb 0oz	191	13lb 10oz	370
7lb 7oz	203	14lb 1oz	382
7lb 15oz	215	14lb 8oz	394
8lb 6oz	227	14lb 15oz	405
8lb 13oz	239	15lb 6oz	418
9lb 4oz	251	15lb 14oz	430
9lb 11oz	263	16lb 5oz	442
10lb 2oz	275	16lb 12oz	454
10lb 9oz	287	17lb 3oz	466

Table 1-4 The Required Minimum Floor Area

Warning and Safety

Additional Information About R454B Refrigerant

WARNING

- The allowable maximum refrigerant charge of [Table 1-3] or the required minimum floor area of [Table 1-4] is available only if the following conditions are met:
  - Minimum velocity of 3.28ft/s, which is calculated as the indoor unit airflow divided by the nominal face area of the outlet. The grill area shall not be deducted. Minimum air flow rate must meet the corresponding values in [Table 1-5], which is related to the actual refrigerant charge of the system (M_C).
- The maximum refrigerant limit described above applies to unventilated areas. If additional measures such as mechanical ventilation or natural ventilation are implemented, the maximum refrigerant charge can be increased or the minimum floor area can be reduce.

About Installation

WARNING

- Do not alter, change, or modify the appliance.

CAUTION

- Prevent children from accessing the work area during installation to prevent unforeseeable accident.
- The base of the outdoor unit must be firmly fixed.
- Carry out a test run after the installation.
- The packaging materials are recyclable and should be disposed of in a separate waste bins.
- The appliance should not be installed in a location where the air outlet of the indoor or outdoor unit is obstructed. Obstruction of these opening may cause damage or malfunctions to the appliance.

About Power and Electricity

WARNING

- Ensure that the power voltage corresponds to that stamped on the rating plate.
- A fuse or overload protection device with a suitable capacity be installed.
- The appliance must be fitted with means for disconnection from the main power supply under over-voltage category III conditions. All electrical wiring must follow federal, state, or local regulations.
- When working on the electric terminals, ensure the appliance is disconnected from the power supply.
- Make sure the appliance is properly grounded to prevent electric shock.

WARNING

- Do not bend, tug, or compress the power cord during installation to prevent damaging the power cord. Damaged electrical cord should be replaced by a qualified electrician.

Warning and Safety

About Operation





- Do not disconnect the appliance from the power supply before shutting off the appliance. This might create a spark and potentially cause a fire.
- Do not place flammable substances near the appliance.
- Do not climb onto or place any objects on the appliance.
- Do not insert any objects into the appliance to prevent damage or injury.
- Do not obstruct the air inlet or outlet.



- Only use the appliance as instructed in this booklet. These instructions are not intended to cover every possible condition and situation. As with any electrical household appliance, common sense and caution are therefore always recommended for usage and maintenance.

Encountering Troubles





- In the case of the appliance emitting smoke, burning smell, leaking water, or making unusual noise, shut down the appliance and disconnect from the power supply immediately. Contact a qualified technician for inspection and repair.

Installation Info

Installation Location

- Ensure air optimal distribution for the air handler.
- Air path should not be blocked or obstructed.
- Make sure condensation from the air handler can be drain properly.
- Ensure there is sufficient clearance around the unit as stated below, and for future maintenance and servicing.
- Keep the refrigerant lineset within allowable limit between the outdoor compressor and indoor air handler.
- Avoid installing the air handler near places where oil or oil vapors may reach the unit. Oil mist or residue would collect on the heat exchanger and reducing the air handler performance.

Vertical Application

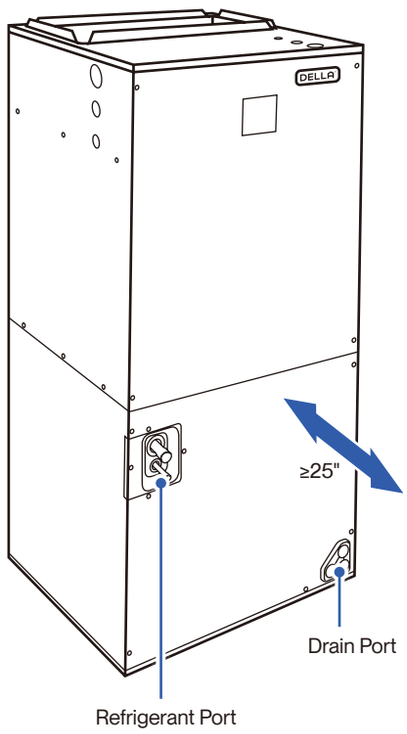

Horizontal Application

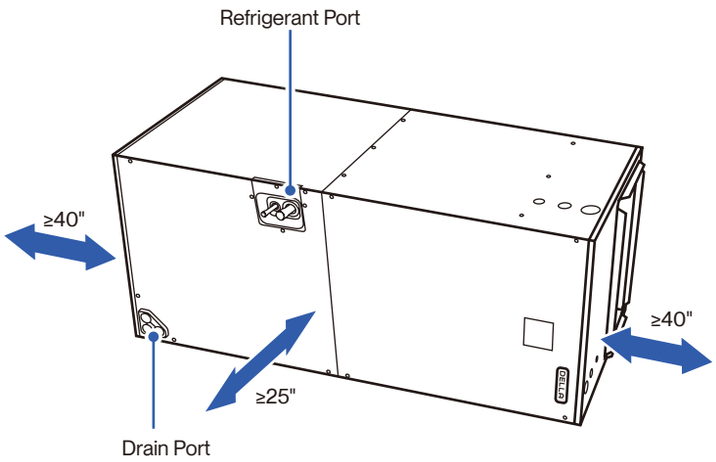

Installation Info

Choosing Appliance Orientation

This air handler is designed for indoor installation only.

The air handler can be install in either vertical upright position and horizontal position.

In the case of choosing to install the air handler in a horizontal position, a minor field modification is necessary to covert from "horizontal right" to horizontal left"

Upflow Configuration

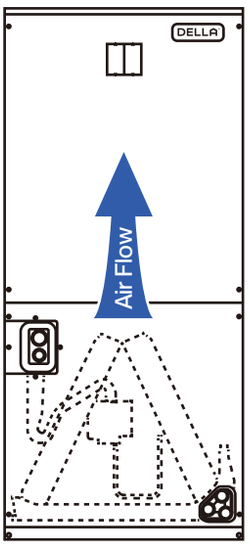

Horizontal Right Configuration

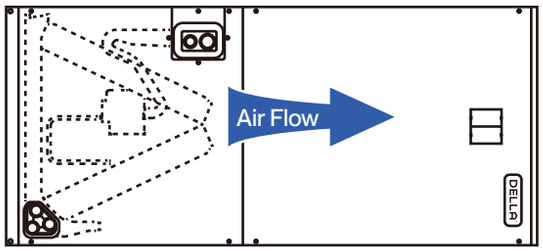

Horizontal Left Configuration

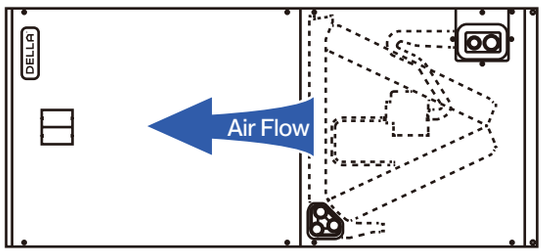

Installation Info

Horizontal Left Orientation Modification

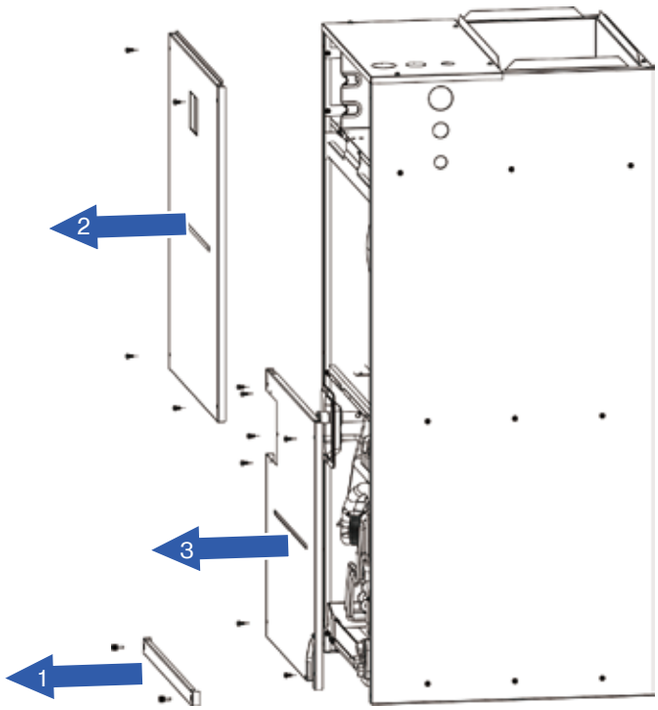

- Remove front panels from the air handler in the order stated on the above graphic.

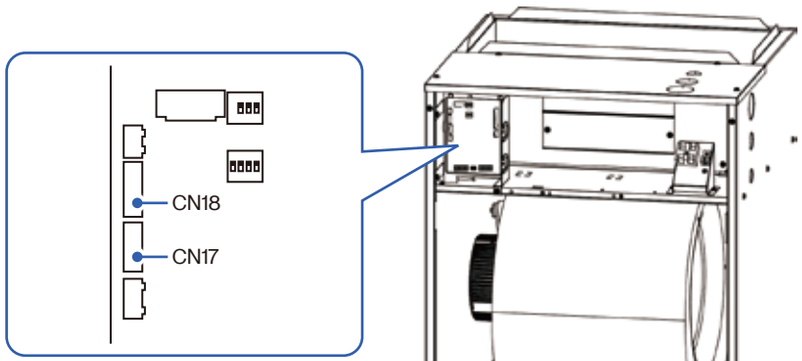

Unplug Cable from CN17, CN18

- Unplug the cable connectors of the evaporator from the circuit board.

Installation Info

Horizontal Left Orientation Modification

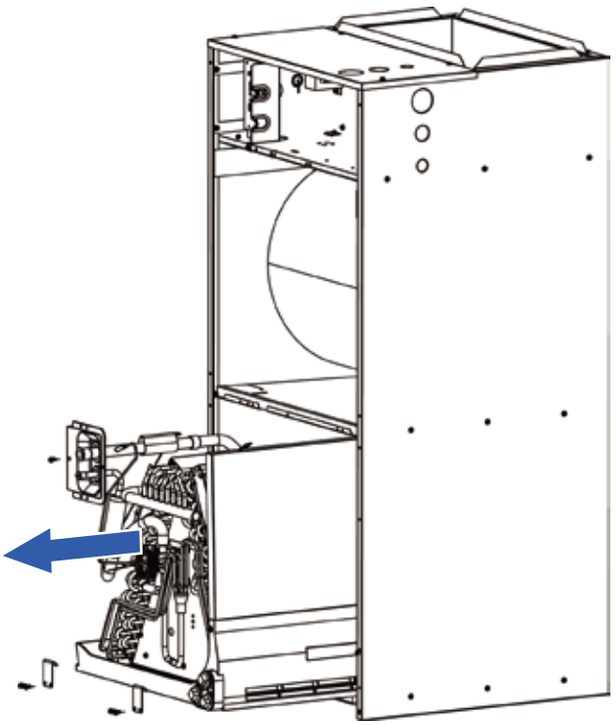

- Slide the evaporator out from the air handler unit cabinet.

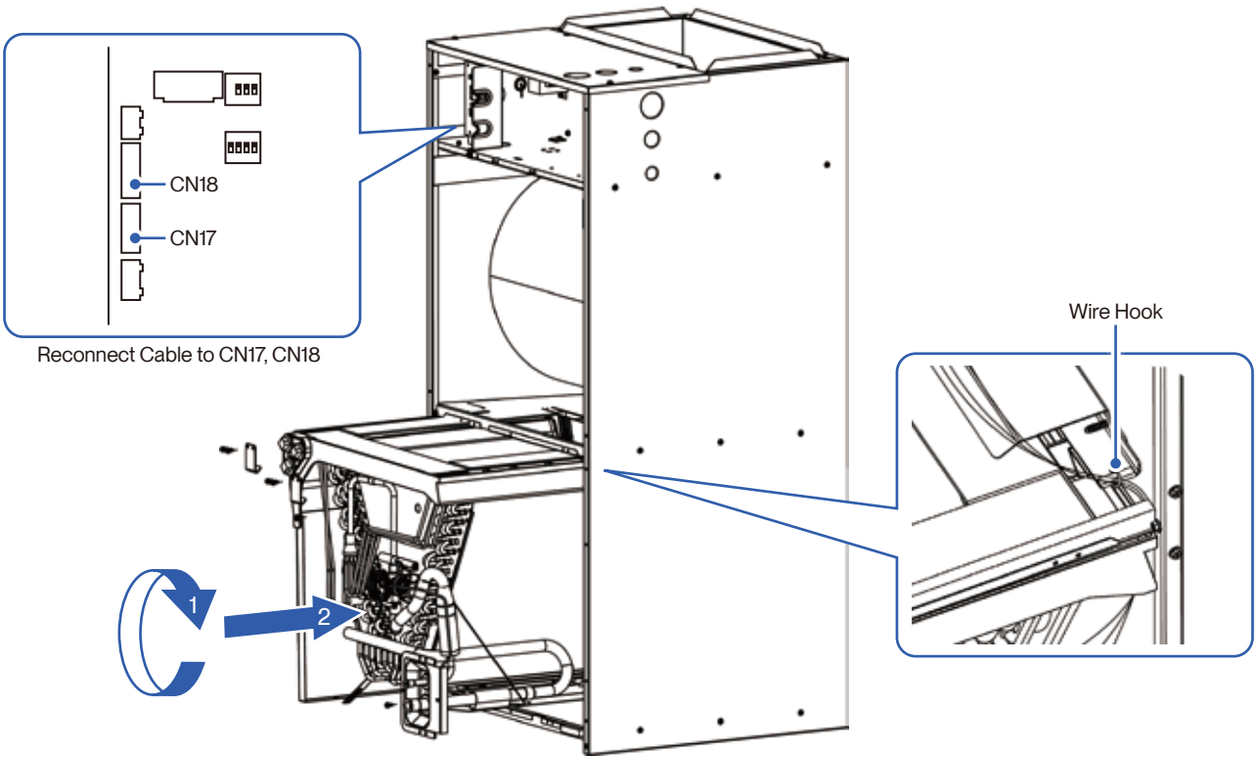

- Rotate the evaporator upside down and slide it back into the air handler unit cabinet. Pass wire cable through the water receiving tray and manage the wires to the hook, then reconnect the cable to the circuit board.

Installation Info

Horizontal Left Orientation Modification

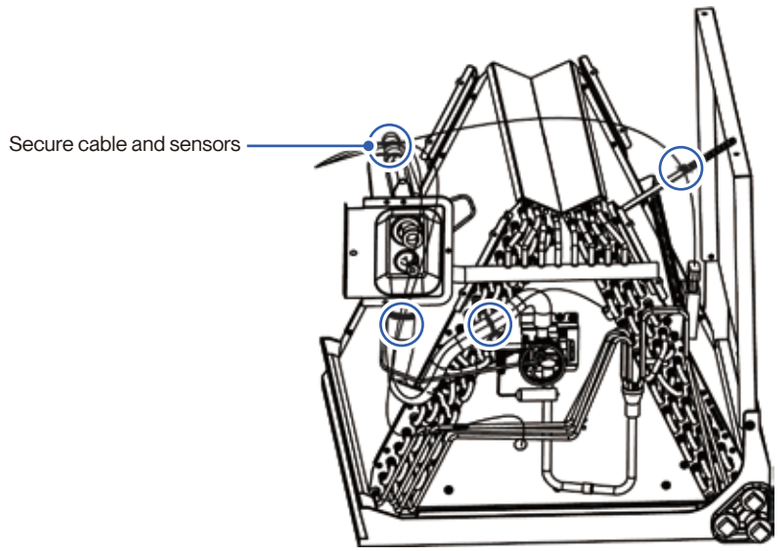

- Use cable ties to secure cables in indicated place.

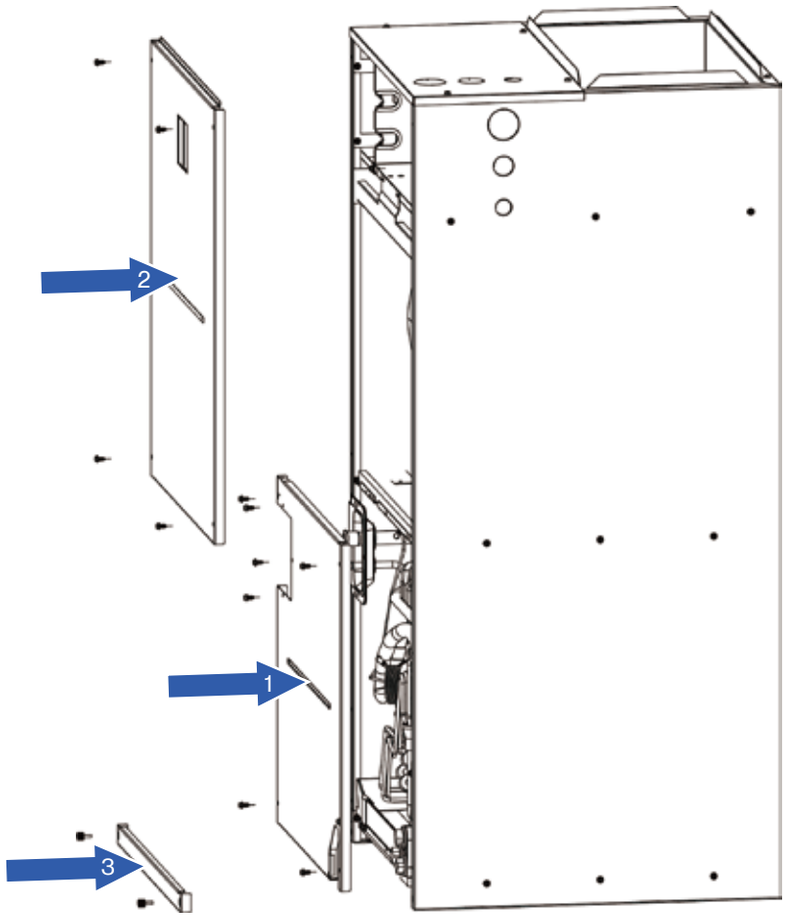

- Reinstall all the front cover plates to the unit.

Installation Info

Cutting the Refrigerant Pipe

Cut new or existing refrigerant line to your desired lenghth.

1. Cut the copper pipe with a pipe cutter.
2. Remove any burrs or rough edges with a reamer with the pipe facing downward.

- The opening of the pipe must face downward to the ground when deburring to prevent chips or dust from entering the pipe.

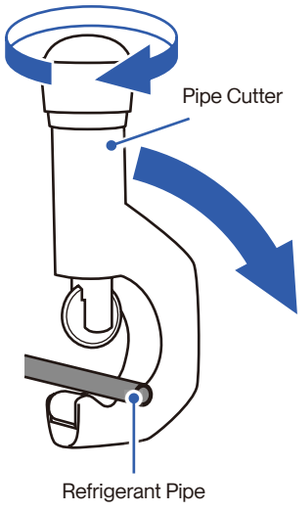

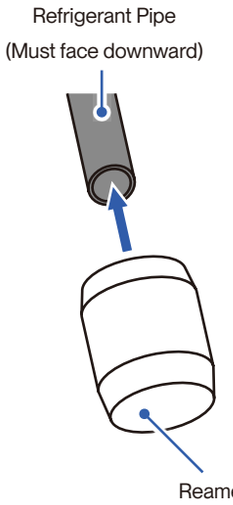

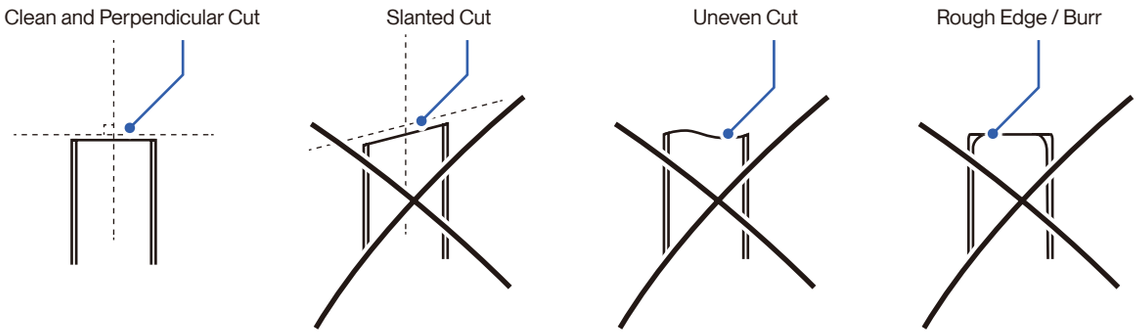

Installation

Installation Info

Refrigerant Line Connection and Brazing

CAUTION

- Do not install the connecting refrigerant pipe unitl both outdoor compressor and indoor air handler units have been installed.
- Handle the refrigerant pipe with care, any damage, dent, or deform on the pipe would cause refrigerant leak and drastically reduce efficiency of the unit.

1. Remove cover caps on the refrigerant ports on the air handler.
2. Cover thermal expansion valve and temperature sensors with heat blocking putty.
3. Purge refrigerant lines with dry nitrogen from gas service valve.
4. Connect refrigerant lines to the indoor unit's refrigerant ports.
5. A bi-direction filter drier (without active alumina) should be connected to the liquid line.
6. Braze all the connections.
7. Remove heat blocking putty only after the braze work is completed and the connections are cooled down.

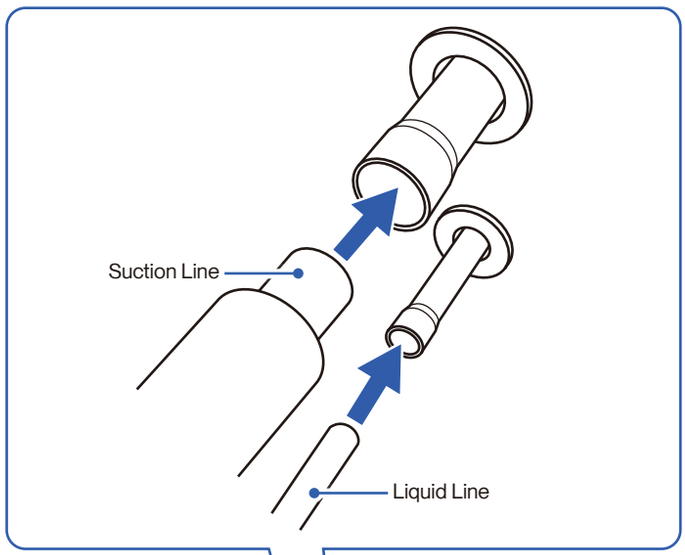

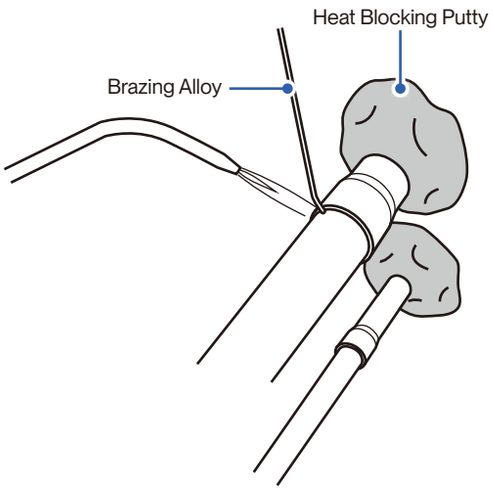

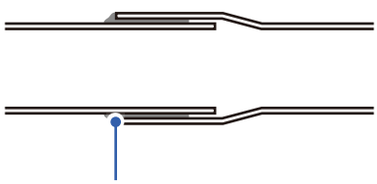

Let capillary action draws in the brazing material into the connection

Installation Info

Drain Pipe Connection

- When connecting drain pipe, make sure the upper most drain port is always covered, the lowest port should be connected to a drain pipe, and the remaining port connected to a overflow pipe that is exposed to the air.

- Condensation usually should flow in the drain pipe only. In the case of water flow in the overflow pipe, it might be an indication that the drain pipe is clogged or obstructed.

Upflow Configuration

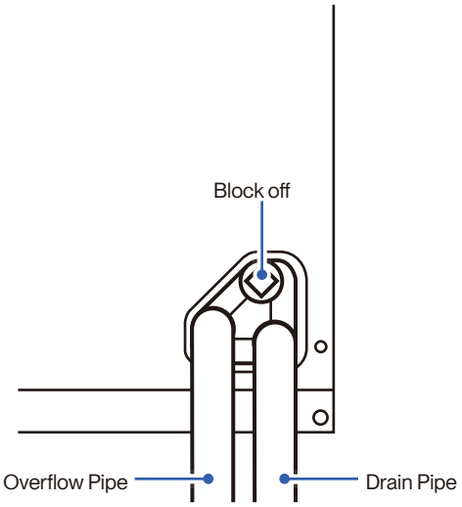

Horizontal Configuration

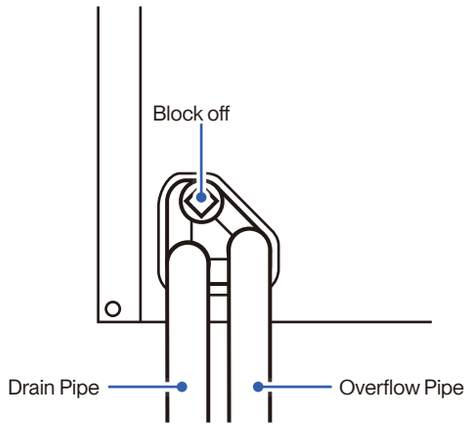

Installation Info

Electrical Wiring

WARNING

- Follow all electrical safety precausions when installing, testing, servicing, and troubleshooting this product. Failing to follow precautions when working with live electrical components could result in death or serious injury.

The power supply must corresponds to that stamped on the rating plate.

Power wiring must comply with national, state, and local codes.

Locate and follow the wiring diagram printed on the inside of the control box cover.

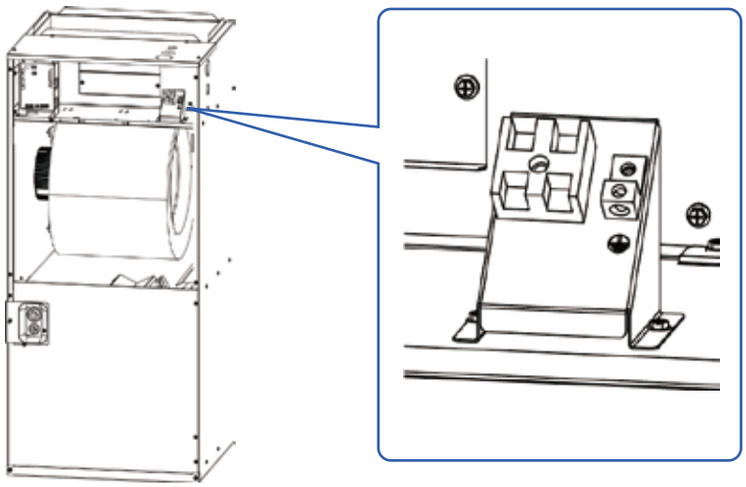

Wiring Reference

Wiring Material Ampacity	AWG
4	22
7	20
10	18
13	16
18	14
25	12
30	10
40	8
55	6
70	4

The ampacity shown apply to appliance wiring materials with insulation rated not less than 194°F / 90°C.

Supply circuit power wiring must be 167°F minimum copper conductors only.

Installation Info

Circuit Diagram

048-T series IDU

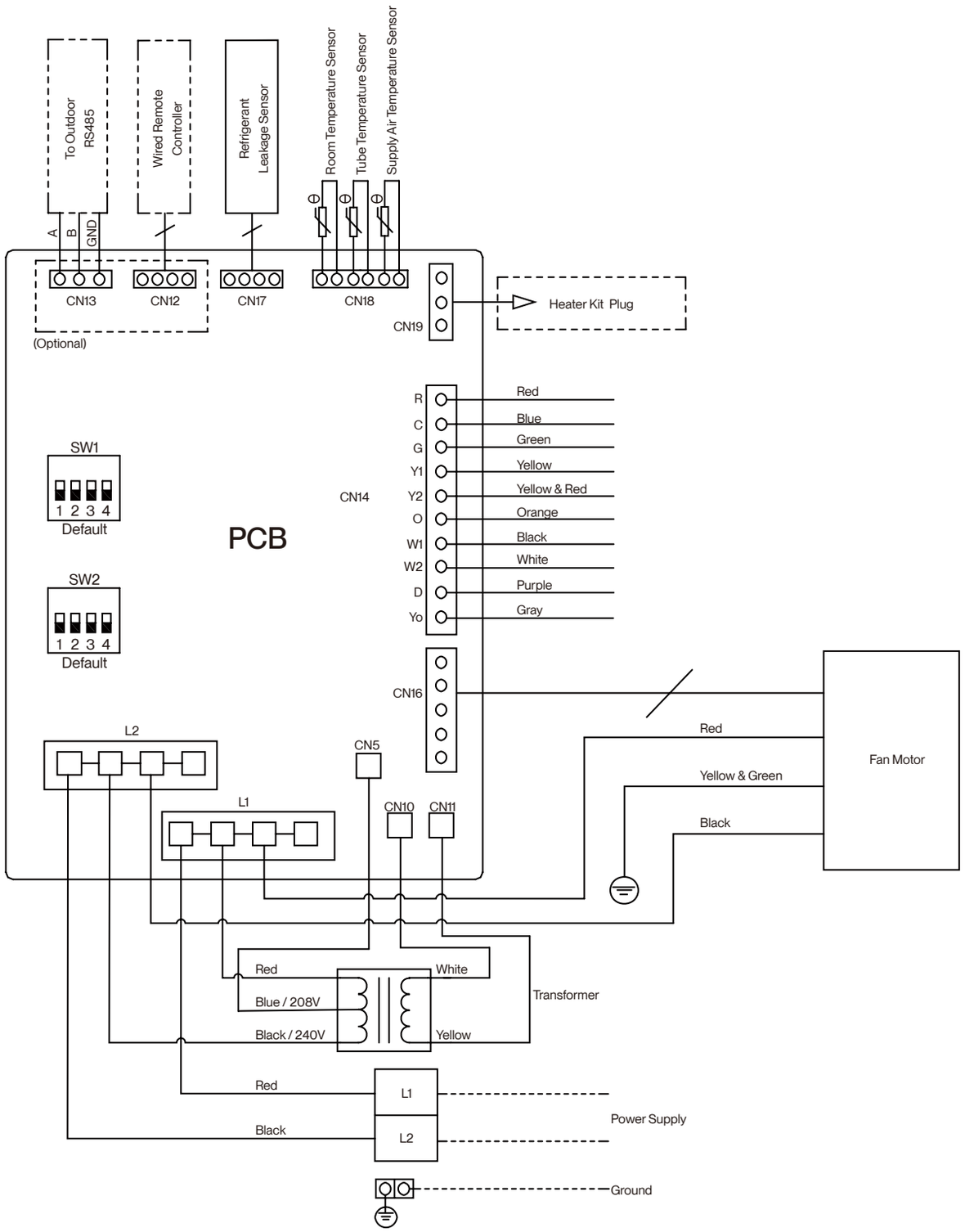

Installation Info

Low Voltage Wire Connection

Class 2 low voltage wiring should not be run in conduit with main power wiring and must be seperated from power wiring, unless class 1 wire of proper voltage rating is used.

- Low voltage control wiring should be color coded **18 AWG**.
- Refer to wiring diagrams attached to indoor and outdoor sections to be connected.
- Make sure separation of control wiring and power wiring has been maintained.

Unit Terminal	Control Wiring
R	24V AC Power Supply for Thermostat from Secondary Transformer
C	Common Wire
G	Fan Motor Relay
Y1	Compressor Stage 1, Low Load Output Control
Y2	Compressor Stage 2, High Load Output Control
O	Cooling 4-way Valve
W1	Heating Stage 1, Electrical Heater Low Load Output Control
W2	Heating Stage 2, Electrical Heater High Load Output Control
Yo	Outdoor Compressor
D	Defrost Signal

- Be sure power supply corresponds to that on the equipment's rating plate.
- Power and grounding wiring must comply with local codes.
- Low voltage wiring to be No. 18 AWG minimum conductor
- Some thermostats may use W2/AUX for heat pump.
- The electrical heater may not be avaliable for some model.
- For single stage thermostat with Y/Y1 terminal only, place both Y1 and Y2 wire together to Y/Y1 terminal.
- When the communication method between the indoor and outdoor unit is selected as 24v communication, the above wiring method is required.

Grounding

WARNING

- The indoor unit must be grounded. Failing to follow precautions when working with live electrical components could result in death or serious injury.

- Grounding may be accomplished by grounding metal conduit when installed in accordance with electrical codes to the unit cabinet. Grounding may also be accormplised by attaching ground wire(s) to ground lug(s) provided in the unit wiring compartment.
- Use of multiple supply circuits require grounding of each circuit to lug(s) provided in the unit.

Installation Info

Low Voltage Wire Connection

2 Stages, 2 Step, Heat Pump

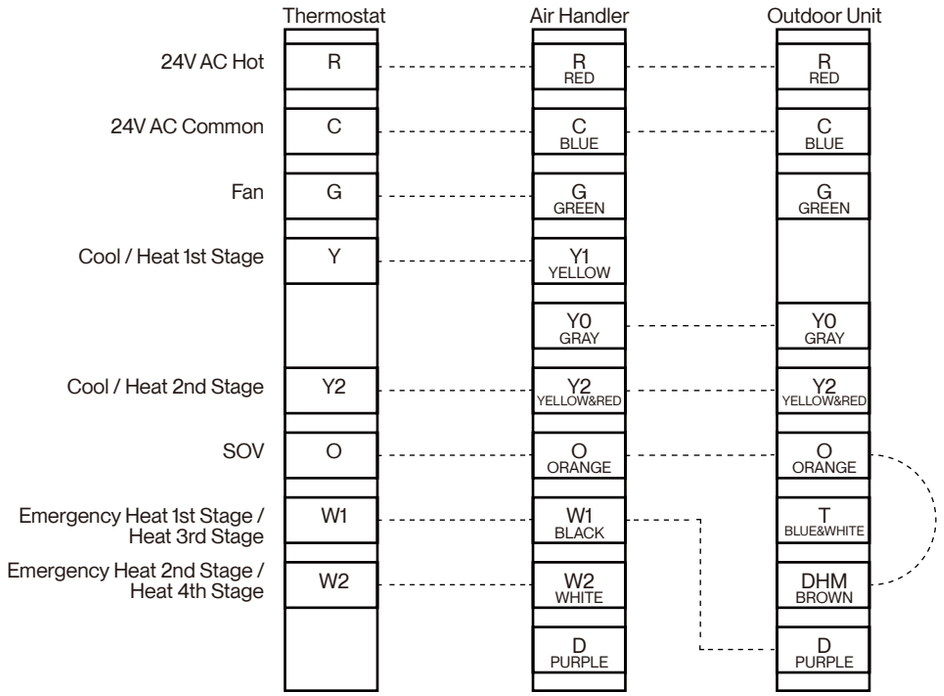

2 Stages, 2 Step, Cooling Only

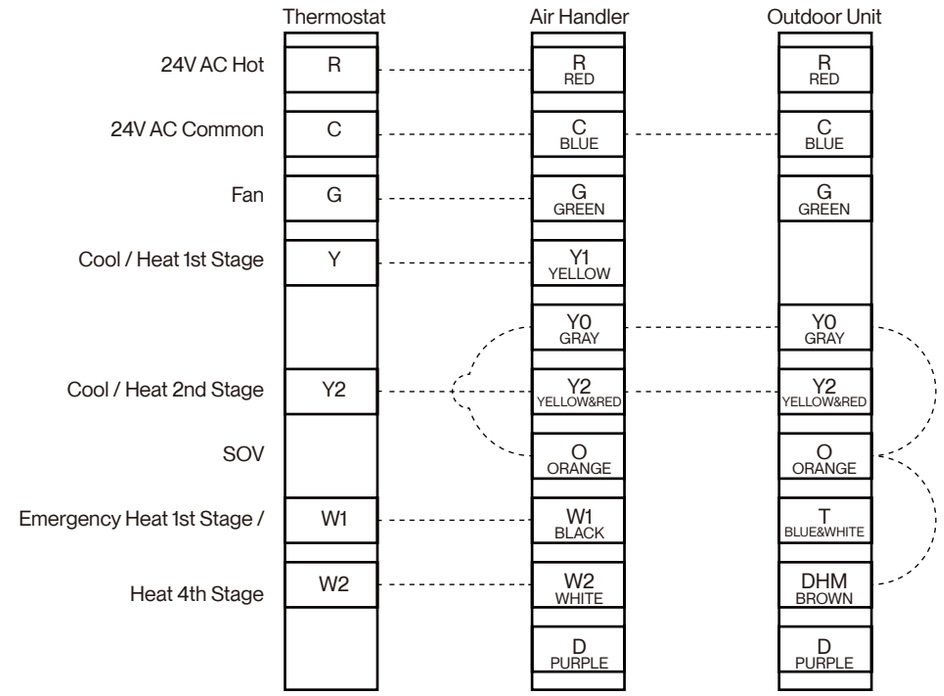

DELLA®

Installation Info

Low Voltage Wire Connection

Single Step, Heat Pump

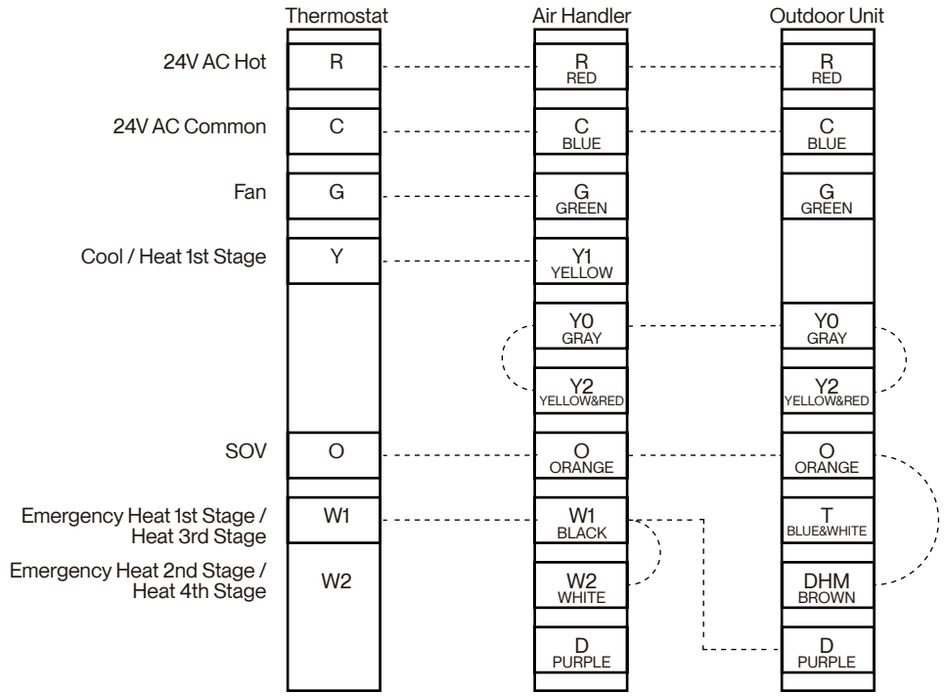

Single Step, Cooling Only

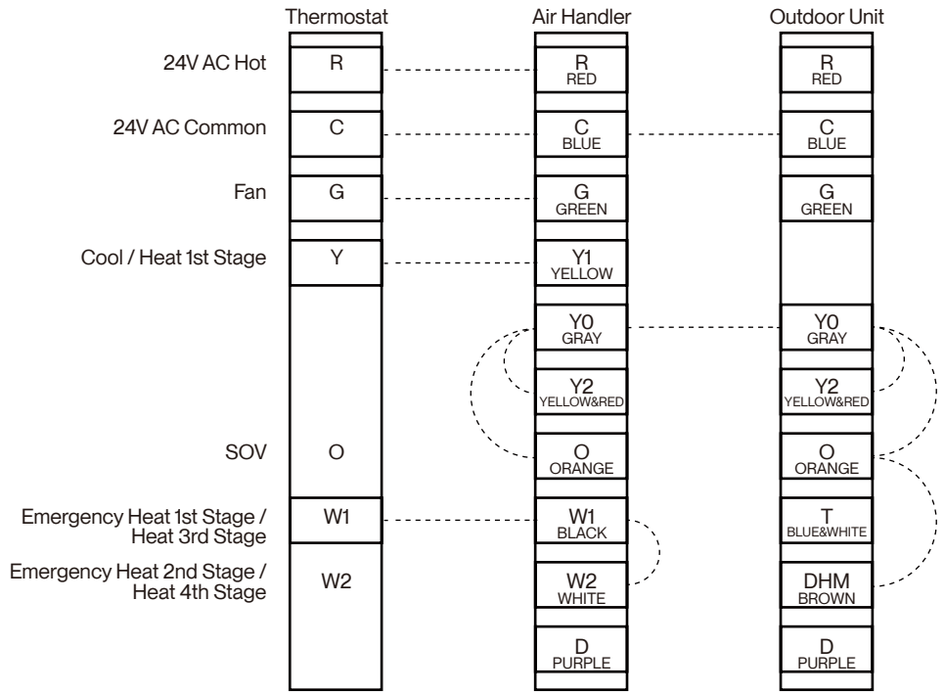

Installation Info

Electrical Data

	048-T-24K-IDU	048-T-36K-IDU	048-T-48K-IDU	048-T-60K-IDU
Power Supply	208 V - 230 V / 60 Hz / 1P	208 V - 230 V / 60 Hz / 1P	203 V - 230 V / 60 Hz / 1P	208 V - 230 V / 60 Hz / 1P
Power Cable Diameter Connecting to the Terminal Block	14 AWG	14 AWG	14 AWG	14 AWG
Motor HP	1/2	1/2	3/4	3/4
Motor Step	5	5	5	5
Min. Circuit Amp	5A	5A	7A	7A
Max. Breaker Size	15A	15A	15A	15A

Installation

Installation Info

Airflow Performance Data

Model	Motor Speed		SCFM								
			External Static Pressure-Inches W.C.								
			0.0	0.1	0.2	0.3	0.4	0.5	0.6	0.7	0.8
048-T-24K-IDU	Super Grade	SCFM	1173	1130	1065	1021	956	909	838	791	720
	Top Grade	SCFM	1139	1095	1028	983	916	867	795	747	675
	Mid-High Grade	SCFM	1105	1069	990	944	875	826	752	703	929
	Mid Grade	SCFM	1072	1024	953	906	835	785	709	695	583
	Mid-Low Grade	SCFM	1038	989	916	868	795	743	666	615	538
	Low Grade	SCFM	1004	954	879	829	754	702	623	571	492
	Mute Grade	SCFM	970	919	842	791	714	661	580	527	446
048-T-36K-IDU	Super Grade	SCFM	1539	1510	1467	1438	1395	1360	1306	1271	1218
	Top Grade	SCFM	1440	1407	1358	1325	1276	1237	1179	1140	1082
	Mid-High Grade	SCFM	1340	1304	1248	1211	1156	1114	1052	1010	947
	Mid Grade	SCFM	1241	1200	1139	1098	1036	992	924	879	812
	Mid-Low Grade	SCFM	1173	1130	1065	1021	956	909	838	791	720
	Low Grade	SCFM	1105	1059	990	944	875	826	752	703	629
	Mute Grade	SCFM	1038	989	916	868	795	743	666	615	538
048-T-48K-IDU	Super Grade	SCFM	1871	1836	1784	1749	1697	1654	1589	1545	1481
	Top Grade	SCFM	1779	1746	1696	1663	1613	1572	1510	1469	1408
	Mid-High Grade	SCFM	1687	1655	1608	1577	1529	1490	1432	1393	1335
	Mid Grade	SCFM	1502	1474	1432	1404	1362	1327	1275	1241	1188
	Mid-Low Grade	SCFM	1173	1130	1065	1021	956	909	838	791	720
	Low Grade	SCFM	1105	1059	990	944	875	826	752	703	629
	Mute Grade	SCFM	1225	1184	1122	1181	1019	976	911	867	802
048-T-60K-IDU	Super Grade	SCFM	2056	2017	1960	1922	1864	1817	1745	1698	1627
	Top Grade	SCFM	1871	1836	1784	1749	1697	1654	1589	1545	1481
	Mid-High Grade	SCFM	1687	1655	1608	1577	1529	1490	1432	1393	1335
	Mid Grade	SCFM	1502	1474	1432	1404	1362	1327	1275	1241	1188
	Mid-Low Grade	SCFM	1410	1377	1329	1296	1248	1210	1154	1116	1060
	Low Grade	SCFM	1317	1281	1225	1189	1133	1093	1032	992	931
	Mute Grade	SCFM	1225	1184	1122	1081	1019	976	911	867	802

Shaded boxes represent airflow outside of the required 300 - 450 CFM / ton at full load.

* Airflow based upon cooling performance at 230V with no electric heat and no filter. Airflow at 208V is approximately the same as 230V because the multi-tap ECM motor is a constant torque motor. The torque doesn't drop off at the speed in which the motor operates.
The air distribution system has the greatest effect on airflow. For this reason, the contractor should only use industry-recognized procedures to finish ductwork.
Heat pump systems requires a specified airflow. Each ton of cooling requires between 300 - 400 CFM. Duct design and constructioni should be carefully dune. System performance can be lowered dramatically through bad planning or workmanship. Air supply diffusers must be selected and located carefully. They must be sized and positioned to deliver treated air along the perimeter of the space. Return air grilles must be properly sized and carry air back to the blower. Failng to follow these requirement may cause abnormal noise and drafts.

Installation Info

Ductwork

Ductwork must comply with the National Fire Protection Association NFPA 90A, NFPA 90B and any applicable local ordinance.

WARNING

- Do not, under any circumstances, connect return ductwork to any other heat producing device such as fireplace insert, stove, etc. It may cause a fire, carbon monoxide poisoning, explosion, personal injury or property damage.

Sheet metal ductwork run in unconditioned spaces must be insulated and covered with a vapor barrier.

Fibrous ductwork may be used if constructed and installed in accordance with SMACNA construction standard on fibrous glass ducts. Ductwork must comply with National Fire Protection Association as tested by U/L Standard 181 for Class I Air Ducts. Check local codes for requirements on ductwork and insulation.

- Duct system must be designed within the range of external static pressure the unit is designed to operate against. It is important that the system airflow be adequate. Make sure supply and return ductwork, grills, special filters, accessories, etc. are accounted for the total flow resistance. Refer to the airflow performance table in this manual.
- Design the duct system in accordance with "ACCA" Manual "D" Design for Residential Winter and Summer Air Conditioning and Equipment Selection. Latest editions are available from: "ACCA" Air Conditioning Contractors of America, 1513 16th Street, N.W., Washington, D.C. 20036. If duct system incorporates Xair duct, be sure that the pressure drop informaion (straight length plus all turns) shown in "ACCA" Manual "D" is accounted for the system.
- Supply plenum is attached to the 3/4" duct flanges supplied with the unit. Attach flanges around the blower outlet.
- Secure the supply and return ductwork to the unit flanges, using proper fasteners for the type of duct used and tape the duct-to-duct joint as required to prevent air leaks.

- If an elbow is included in the plenum close to the unit, it must not be smaller than the dimensions of the supply duct flange on the unit.
- The front flange on the return duct connected to the blower casing must not be screwed into the area where the power wiring is located. Drills or sharp screw points can damage insulaiton on wires located inside unit.

Installation Info

Air Filter

Filter application and replacement may affect air flow and the system performance. Reduced airflow can shorten the life of the system's major components, such as motor, heat relays, evaporator coil or compressor. Unit should be sized for a maximum of 300 feet / min. air velocity or the recommedation of the filter type installed.

Ensure the air flow is in the range of 300 - 450 CFM if adding high efficiency filters or electronic air filtration systems.

- Do not double filter the return air duct.
- Do not place filter in the supply air duct.

WARNING

- Do not operate the system without filter. Dust and particles in the air may lodge in the ductwork and get into the air handler unit. Any circulated dust particles could be heated and charred by contact with the air handler elements. This residue could soil ceilings, walls, drapes, carpets, and other articles in the building. Soot damage may occur without filter in place when certain types of caldles, oil lamps or standing pilots are burned.

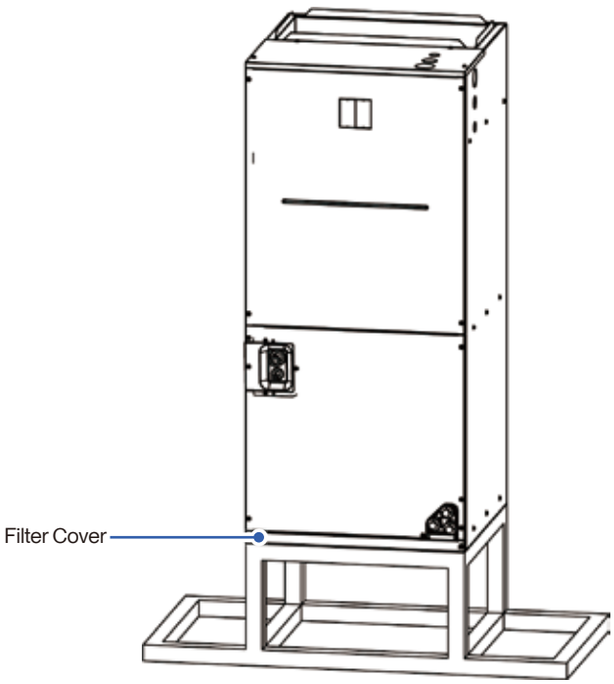

Air filter installation / replacement

1. Remove the the filter cover by unscrewing the bolts.
2. Hold the edge of the air filter and extract it from the unit.
3. Clean the air filter or use replace with a new filter.

NOTE: Air filter is not factory installed.

	048-T-24K-IDU	048-T-36K-IDU	048-T-48K-IDU	048-T-60K-IDU
Filter Size	18" x 20"	18" x 20"	20" x 22"	20" x 22"

Installation Info

Refrigerant Sensor

The air handler is equiped with refrigerant sensor. The refrigerant sensor automatically detects the condition of the machine while in operation, and it will automatically start air circulation and stop the compressor when the refrigerant concentration reaches an alarm range.

- The refrigerant sensor must be maintained by a professional and only the specified sensor by the manufacturer can be used / replaced.
- The design lift of the refrigerant sensor is 15 years, the sensor should be replace within the range of its service life.
- When the refrigerant sensor detect abnormal level of refrigerant in the air, the alarm signal is as follows:

	24V communication	485 communication
Refrigerant Leak Protection	Red light stays ON	Display "Hd"
Abnormal communication of the refrigerant sensor	Red light blinks	Display "Fd"

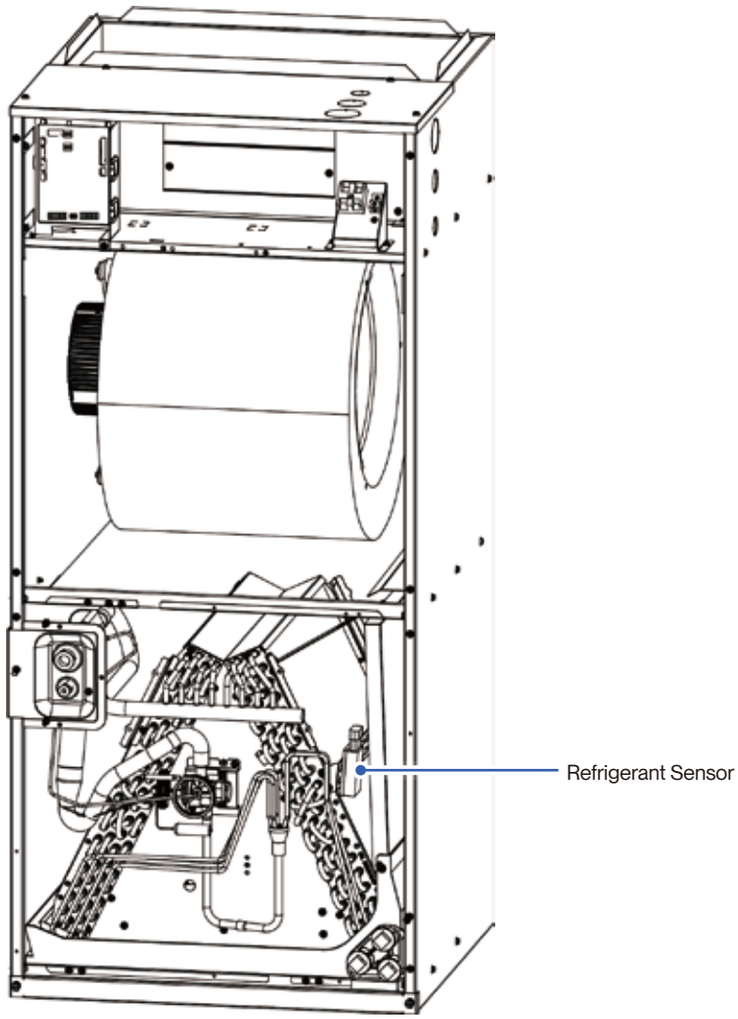

Installation Info (Optional)

Auxiliary Heater Kit Electric Data

Air Handler Model	Heater Kit Model	Electric Heat (kW)	Min. Circuit Ampacity			Max. Breaker (HACR) Amacity		
			208V	230V	240V	208V	230V	240V
048-T-24K-IDU	048-T-5KW	5	21	23	24	25	30	30
	048-T-10KW	10	42	46	48	50	60	60
048-T-36K-IDU	048-T-5KW	5	21	23	24	25	30	30
	048-T-10KW	10	42	46	48	50	60	60
	048-T-15KW	5 + 10	21 + 42	23 + 46	24 + 48	25 + 50	30 + 60	30 + 60
048-T-48K-IDU	048-T-5KW	5	21	23	24	25	30	30
	048-T-10KW	10	42	46	48	50	60	60
	048-T-15KW	5 + 10	21 + 42	23 + 46	24 + 48	25 + 50	30 + 60	30 + 60
	048-T-20KW	10 + 10	42 + 42	46 + 46	48 + 48	50 + 50	60 + 60	60 + 60
048-T-60K-IDU	048-T-5KW	5	21	23	24	25	30	30
	048-T-10KW	10	42	46	48	50	60	60
	048-T-15KW	5 + 10	21 + 42	23 + 46	24 + 48	25 + 50	30 + 60	30 + 60
	048-T-20KW	10 + 10	42 + 42	46 + 46	48 + 48	50 + 50	60 + 60	60 + 60

WARNING

- Disconnect all external power supplies before installation and serving of heater kit. Turn off accessory heater power switch if applicable. Failure to do so may result in electric shock and series injury.
- Heater kit must be properly grounded, Follow national electric code and local regulations.
- When installing heater kit in an enclosed area such as a garage, heater elements should have a minimum clearance of 18" from the floor to insure proper ventillation.

Installation Info

Air Handler Fan Speen Requirement with Auxiliary Heater

When the air handler is installed with an electric auxiliary heater, the fan speed selection must meet the following static pressure requirement.

Air Handler Model	Fan Motor Speed	Available Electric Auxiliary Heater									
		External Static Pressure-Inches W.C. (Psi)									
		0	0.1	0.16	0.2	0.3	0.4	0.5	0.6	0.7	0.8
		(0)	(0.003)	(0.005)	(0.007)	(0.010)	(0.014)	(0.018)	(0.021)	(0.025)	(0.028)
048-T-24K-IDU	7	1173	1130	1086	1065	1021	956	909	838	791	720
	6	1139	1095	1050	1028	983	916	867	795	747	675
	5	1105	1059	1013	990	944	875	826	752	703	629
	4	1072	1024	977	953	906	835	785	709	659	583
	3	1038	989	940	916	868	795	743	666	615	538
	2	1004	954	904	879	829	754	702	623	571	492
	1	970	919	868	842	791	714	661	580	527	446
048-T-36K-IDU	7	1539	1510	1481	1467	1438	1395	1360	1306	1271	1218
	6	1440	1407	1374	1358	1325	1276	1237	1179	1140	1082
	5	1340	1304	1267	1248	1211	1156	1114	1052	1010	947
	4	1241	1200	1159	1139	1098	1036	992	924	879	812
	3	1173	1130	1086	1065	1021	956	909	838	791	720
	2	1105	1059	1013	990	944	875	826	752	703	629
	1	1038	989	940	926	868	795	743	666	615	538
048-T-48K-IDU	7	1871	1836	1801	1784	1749	1697	1654	1589	1545	1481
	6	1779	1746	1713	1696	1663	1613	1572	1510	1469	1408
	5	1687	1655	1624	1608	1577	1529	1490	1432	1393	1335
	4	1502	1474	1446	1432	1404	1362	1327	1275	1241	1188
	3	1410	1377	1345	1329	1296	1248	1210	1154	1116	1060
	2	1317	1281	1244	1225	1189	1133	1093	1032	992	931
	1	1225	1184	1143	1122	1081	1019	976	911	867	802
048-T-60K-IDU	7	2056	2017	1979	1960	1922	1864	1817	1745	1698	1627
	6	1871	1836	1801	1784	1749	1697	1654	1589	1545	1481
	5	1587	1655	1624	1608	1577	1529	1490	1432	1393	1335
	4	1502	1474	1446	1432	1404	1362	1327	1275	1241	1188
	3	1410	1377	1345	1329	1296	1248	1210	1154	1116	1060
	2	1317	1281	1244	1225	1189	1133	1093	1032	992	931
	1	1225	1184	1143	1122	1081	1019	976	911	867	802

Shaded boxes represent pressure outside of the requirement.

Installation Info (Optional)

Auxiliary Heater Kit Installation

1. Detach the front upper cover panel from the air handler unit.
2. On the upper shelf, remove the access panels. Keep the screws for later steps.
3. Slide the auxiliary heater kit into the opening. Beware of the orientation, follow the "upper" and "lower" marking on the mounting plate.
4. Align the back of the auxiliary heater to the slots on the air handler, then secure the mounting plate with the screws originally on the access panels.
5. Connect the electrical wires to the heat kit plug port on the electrical board..
6. Paste the auxiliary heater circuit diagram to the back of the air handler front upper cover panel.

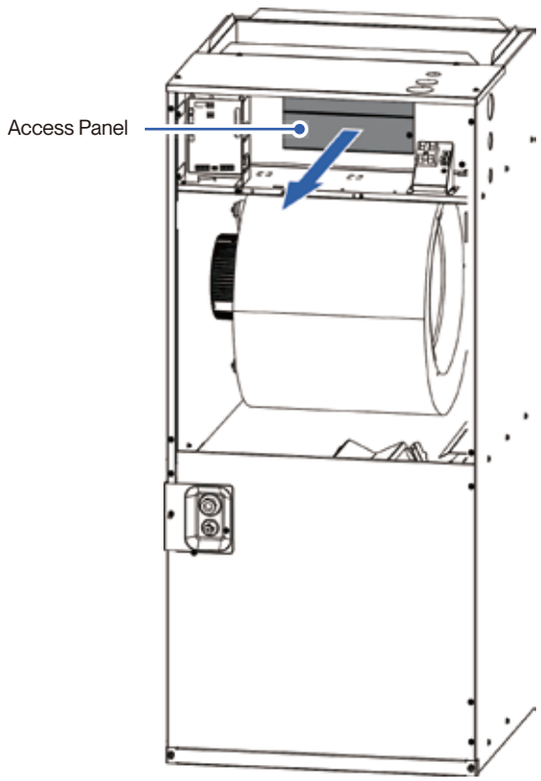

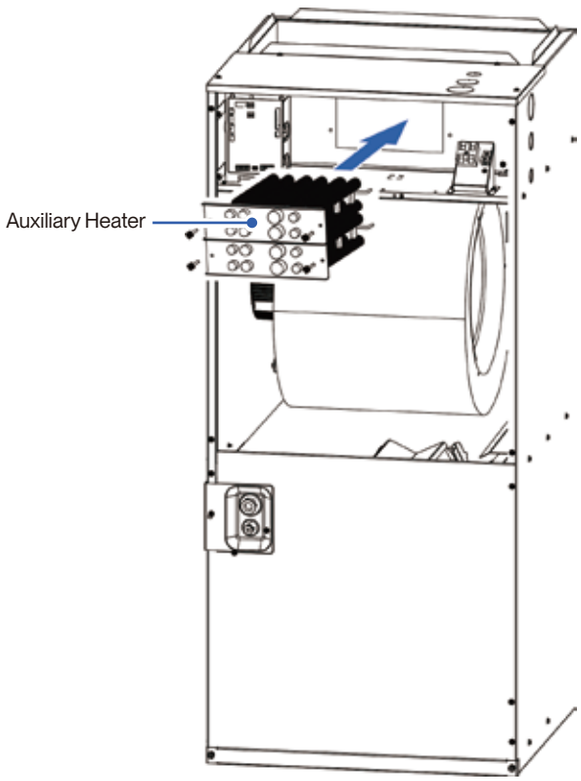

WARNING

- After connecting all wires, check if all breakers are secured properly.
- Insecure breaker may result in breaker malfunction, fire, and electrical shock.

- When indoor control board receives W1/W2 signal, electric heater will be energized and indoor blower will turn on.
- When W1/W2 signal is off, indoor blower will turn off.
- Blower motor runs when "c" is energized, and off when "c" is de-energized.

Installation Info

Auxiliary Heater Electrical Diagram

5kW Heater

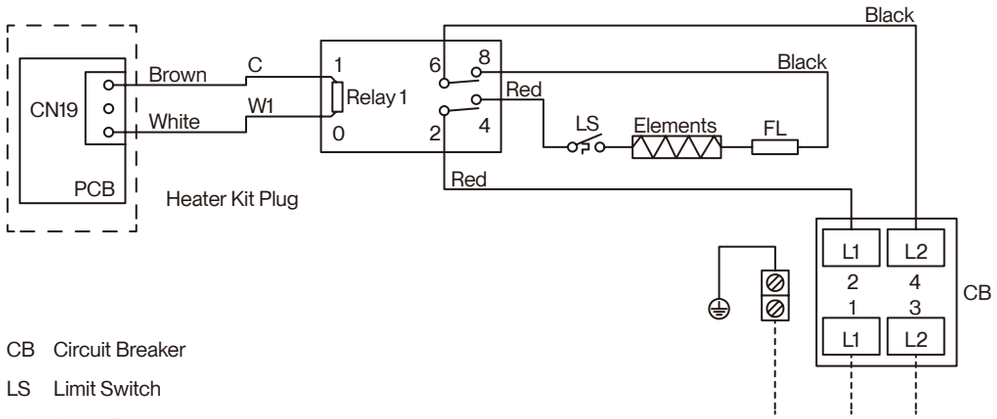

CB Circuit Breaker

LS Limit Switch

FL Fuse Link

5kw Heater Kit / Circuit Breaker 30A

10kW Heater

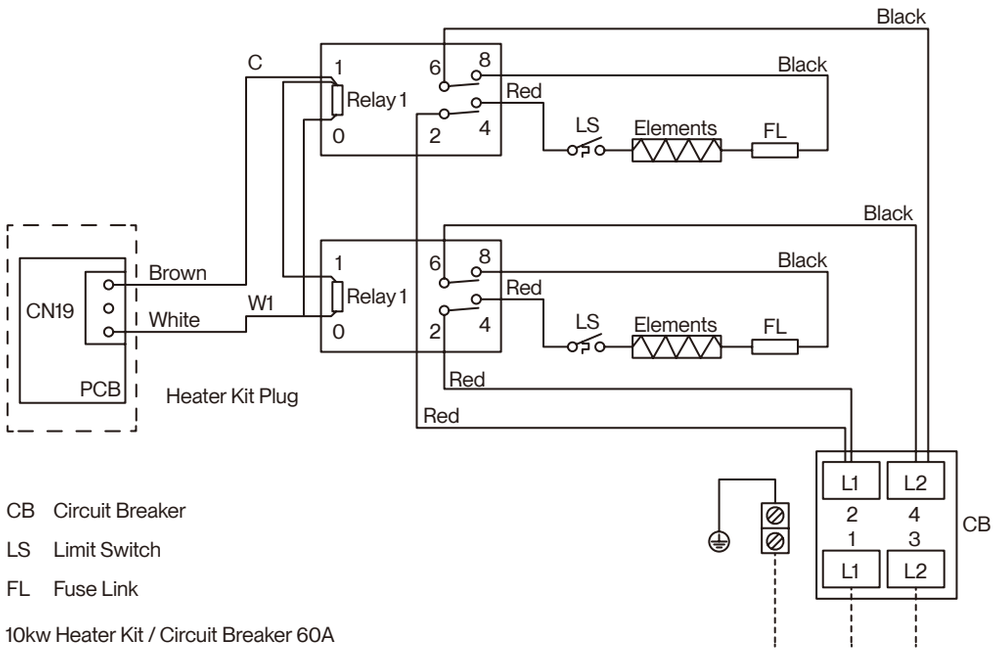

CB Circuit Breaker

LS Limit Switch

FL Fuse Link

10kw Heater Kit / Circuit Breaker 60A

Installation Info

Auxiliary Heater Electrical Diagram

15kW Heater

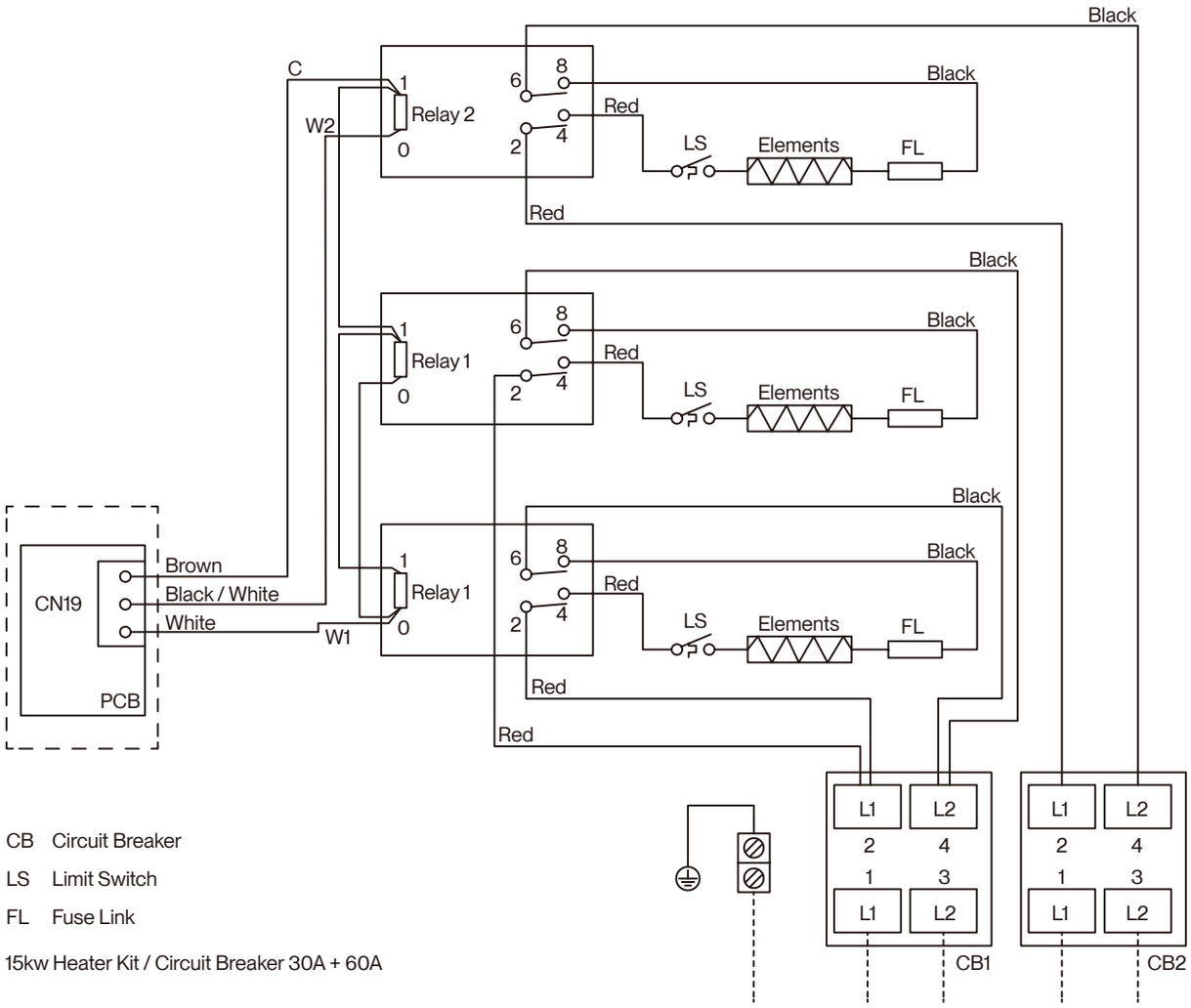

CB Circuit Breaker

LS Limit Switch

FL Fuse Link

15kw Heater Kit / Circuit Breaker 30A + 60A

Installation Info

Auxiliary Heater Electrical Diagram

20kW Heater

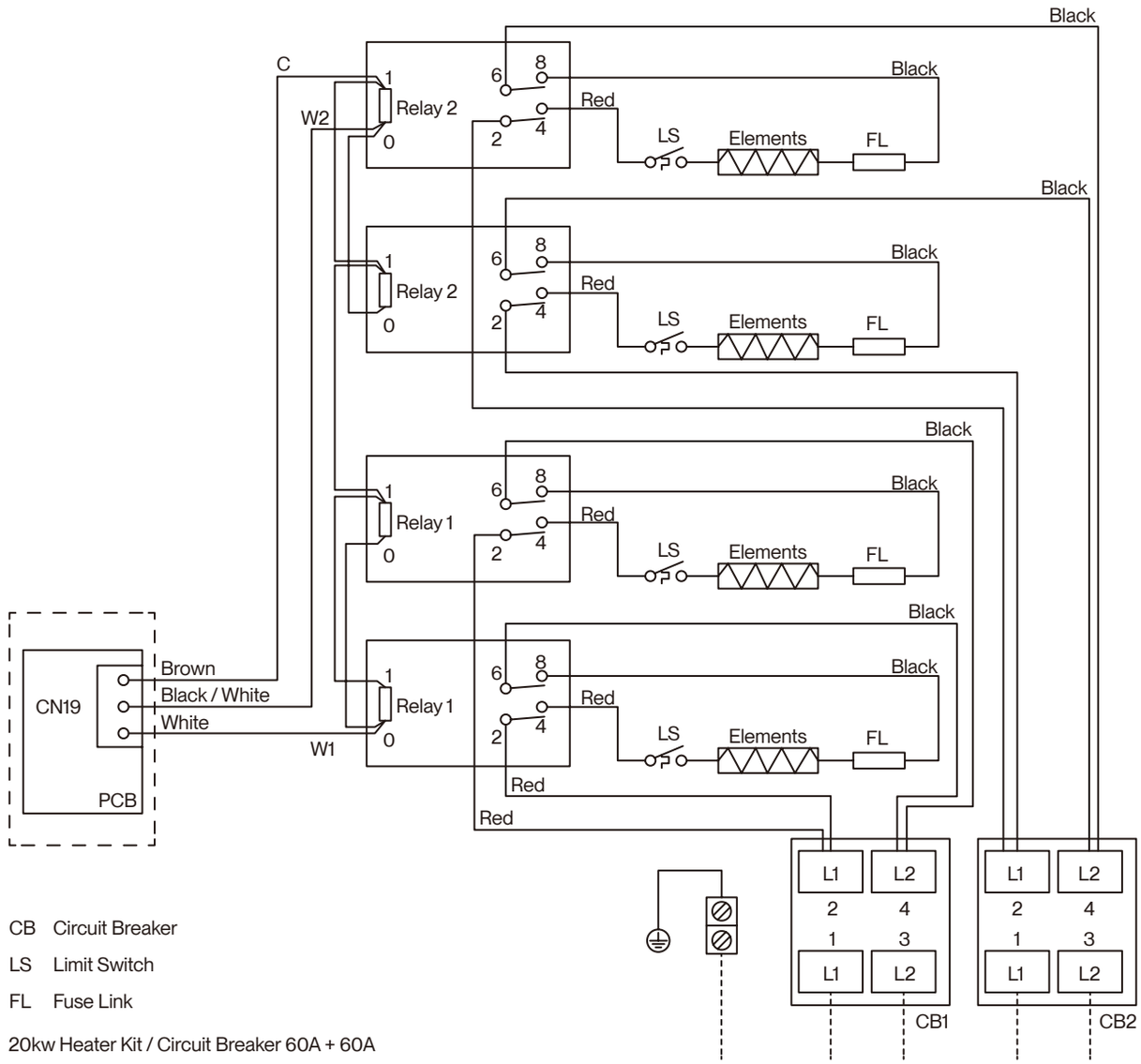

CB Circuit Breaker

LS Limit Switch

FL Fuse Link

20kw Heater Kit / Circuit Breaker 60A + 60A

System Info

Communication Function DIP Switch

The air handler supports both the conventional 24V communication and RS485 communication protocol to control the unit.
According to the actual installation requirement, the DIP code has to match the communication protocol.

Dip Bit	Dip Code	Function
SW2-1		Factory default, 24V ON/OFF Control, using 24V thermostat to control unit operation
		RS485 communication control, requires wire controllers and communication line from the manufacturer to meet the use of accessories

Wind Gear Adjustment DIP Switch

- When the SW1-1 is located at the digital end (factory default), the fan runs in 5th level for high speed and 2nd level for low speed.
- Switch SW1-1 to the "ON" end if you want to adjust the fan speed.
- With SW1-1 on "ON" end, combine SW1-2 and SW1-3 position to get different fan speeds. The fan speed operation obtained by the combination is shown as below:

Combination	SW1 Setting	Low Speed	High Speed
1 (Default)		Mid - High Grade	Super Grade
2		Mid Grade	Super Grade
3		Mid - Low Grade	Top Grade
4		Low Grade	Mid Grade
5		Mute Grade	Mid Grade

- The DIP switch of SW1 only takes effect when SW2-1 is on the "digital" end. When the SW2-1 DIP switch is ON, the wind gear is directly controlled and adjusted by the wire controller.

System Info

Anti-cold Air DIP Switch

- In 24V ON / OFF control mode, adjusting SW1-4 DIP switch can enable anti-cold air function.
- The default DIP switch position of SW1-4 is on the "digital" end. It would enable cold air protection function.
  When the heat pump started, the unit will first run in accordance with the lower wind gear for a period of time to prevent the cold air from blowing into the room at the initial stage of heating operation and affecting comfort. The system will then adjust the speed according to the temperature control wind gear.
  The unit determines the defrosting status of the outdoor unit according to the signal of terminal D. During the outdoor unit defrosting operation, the indoor unit stop running to prevent cold air from blowing into the room. When the unit complete the defrosting process, it will adjust the rotational speed according to the temperature control air gear.
  In electric heating operation, the unit will control the fan operation according to the temperature control wind gear, and do not perform anti-cold wind action.
- Anti-Cold air funtcion can be turned OFF by switching the SW1-4 DIP switch to the "ON" end, and the unit controls the fan operation according to the control wind gear of the thermostat, and does not implement the anti-cold wind control system.

Dip Bit	Dip Code	Function
SW1-4		Enable cold air protection function
		Disable cold air protection function

- The DIP switch of SW1 only takes effect when SW2-1 is on the "digital" end. When the SW2-1 DIP switch is ON, the unit is intelligently controlled and the cold air protection function is always enabled.

Lower Outlet Air Gear Control Function DIP Switch

- The default DIP switch position of SW2-2 is on the "digital" end.
- If the unit is installed at the bottom air outlet, switch the SW2-2 DIP switch to "ON" end. The unit will control the upper limit of the air gear to prevent condensation from being flown into the air duct due to excessive air volumn.

Dip Bit	Dip Code	Function
SW2-2		Use this Dip code position if air is discharged upward or sideway
		Use this Dip code position if air is discharged downward

System Info

Cold Air Prevention

In 23V ON / OFF control mode, SW2-3 DIP switch can be adjust for exhaust air temperature control function.

- The default DIP switch position of SW2-3 is on the "digital" end, The unit's exhaust air temperature control function is enabled.
  When the unit's heat pump is running, if the air flow temperature after the heat exhanger is detected to be too high, the electric auxiliart heat will be controlled not to start to prevent electric heaing temperature from being too high and triggering overheating protection.
- If the air temperature from the equipement need to be further increased, adjust the SW2-3 DIP switch position to the "ON" end. It will disable the air temperature control function, and the electric heating runs according to the thermostat controls, and not affected by the air temperature detected on the heat pump.

Dip Bit	Dip Code	Function
SW2-3		Enable exhaust air temperature control function
	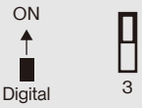	Disable exhaust air temperature control function

- In emergency heating mode, when the heat pump is not running, the electric heating runs according to the control of the temperature controller, and is not affected by the outlet air temperature of the heat pump.

SW2-4 DIP Switch

- SW2-4 DIP switch should be remain as factory default (on the "digital" end). Do not adjust this DIP switch.

System Info

Indicating Light (For 24V Communication Protocol)

LED Color	LED Status	Discription
Green	OFF	Standby Mode
Green	Stays ON	In Operation
Green	1 Flash	Anti-Cold Air Function is Active
Green	2 Flashes	Electric Auxilary Heating is Active
Green	3 Flashes	Commodity Inspection Status
Green	4 Flashes	Self-Check Status
Red	OFF	Trouble-free
Red	Stays ON	Refrigerant Leak Protection Active
Red	1 Flash	Refrigerant Sensor Communication Abnormal
Red	2 Flashes	Internal Fan Fault
Red	3 Flashes	Internal Coil Temperature Sensing Packet Fault
Red	4 Flashes	Supply Air Temperature Sensing Packet Fault
Red	5 Flashes	EEPROM Fault
Red	6 Flashes	Indoor / Outdoor 485 Communication Failure
Red	7 Flashes	Controller 485

- The LED light only works with 24V communication; RS485 communication is not displayed, the wired controller displays the fault code.

DELLA®

Troubleshooting

CAUTION

- If one of the following conditions occurs, switch off the power disconnect immediately and seek further assistance:
- The operation light continues to flash repidly after the unit has been restarted.
- The unit continually trips fuses or circuit breakers.
- A foreign object or water enters the air conditioner.
- The indoor unit leaks
- Other abnormal situations

When Problem	Possible Cause / Explanation / Solution
Abnormal noises from the outdoor unit	Different operating mode may result in different sounds, It is normal as long as it is not abnormally loud.
Noises from both indoor and outdoor unit	Refrigerant gas flow may make a huming sound, which is normal.
	A hissing sound could be heard when the AC enter defrost mode and stop refrigerant gas from flowing, which is normal.
Unit does not turn ON	The unit has a 3 minutes protection that prevent it from overloading. It cannot be restarted within 3 minutes after it being turned off.
	Cooling and Heating mode: If the operation light and PRE-DEF (pre-heating / defrost) indicators are lit, the outdoor temperature is too cold, the unit will attempt to defrost before operating normaly.
The unit changes from cool mode to fan mode	The unit changes its setting to prevent frost from forming on the unit. Once the temperature increases, the unit will start operating again.
	The set temperature has been reached, at which point the unit turns off the compressor. The unit will resume operating when the temperature fluctuates again.
Both the indoor and outdoor unit emit white mist	When the unit restart in heat mode after defrosting, white mist may be emitted due to moisture generated from the defrosting process.
Dust is emitted from either the indoor or outdoor unit	The unit may accumulate dust during extended periods of non use, which will be emitted when the unit is turned on. This can be mitigated by covering the unit during long periods of inactivity.
The unit emits a bad odor	The unit may abosrb odors from the environment (such as furniture, cooking, cigarettes, etc.) which will be emitted during operations.
	The unit filters have become moldy and should be cleaned or replaced.

Having Problems?

Troubleshooting

When Problem	Possible Cause / Explanation / Solution
The outdoor unit fan does not operate	In normal operation, the fan speed is controlled to optimize product operation.
The unit is not working	Power failure. Restore power supply and restart the unit again.
	The power switch is OFF, Turn the power back ON and restart the unit.
	Breaker has been triggered. Reset the breaker.
	The unit's 3 minutes protection has been triggered. Wait 3 minutes and restart the unit.
Poor cooling performance	Temperature setting may be higher than the ambient room temperature. Lower the temperature setting.
	The heat exchanger on the indoor or outdoor unit is dirty. Clean the affected heat exchanger
	The air filter is dirty, Clean or replace the air filter.
	Doors or windows are open. Close the door or windows while operating the AC
	Excessive heat is generated by sunlight. Close windows and curtains to block sunlight generated heat.
	Low refrigerant due to leak or long-term use. Contact HVAC technician and check on refrigerant level. Re-charge the system if necessary.
Poor heating performance	The outdoor temperature is lower than operational temperature
	Cold air is entering through doors and windows. Close the door or windows while operating the AC
	Low refrigerant due to leak or long-term use. Contact HVAC technician and check on refrigerant level. Re-charge the system if necessary.

Having Problems?



www.dellahome.com
support@dellahome.com
800–863–4143
6:00 a.m. – 4:00 p.m. PST Monday – Friday

© Della All rights reserved.

The design and specifications are subject to change without prior notice for product improvement. Any updates to the manual will be uploaded to the della website.

DELLA®

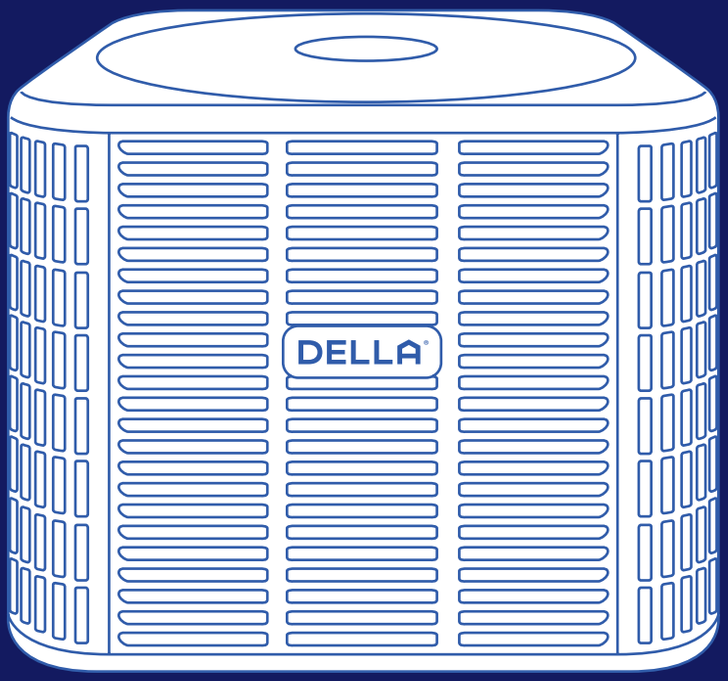

Central AC (T) Series

Compressor

Instruction Manual
Installation and Operation Guide

Table of Content

Before Installation

Warning and Safety 04

Installation

Installation Location 12
Refrigerant Lineset Connection 13
Pressure Test 22
Evacuation 23
Refrigerant Valve 24
Low Voltage Connection 25
High Voltage Connection 28
Circuit Diagram 30
Test Run 31

System Info

Display Code 32
Major Componant Function 35

Having Problems?

Troubleshooting 36

Warning and Safety

- Read this guide before installation. Failure to follow the safety instructions may result in property damage, serious injury, or death.
- Please Keep this manual.

DANGER

Danger:
Indicates an IMMINENTLY hazardous situation that, if not avoided, will result in death, serious injury, or serious property damage.

WARNING

Warning:
Indicates an POTENTIALLY hazardous situation that, if not avoided, will result in death, serious injury, or serious property damage.

CAUTION

Caution:
Indicates an POTENTIALLY hazardous situation that, if not avoided, will result in minor to moderate injury. It may also be used to indicate unsafe practice.

Attention:
Pay additional attention to the instruction.

DO NOT:
Indicates prohibited actions and / or practice.

About Refrigerant

DANGER

- The air conditioner is pre-charged with R454B refrigerant. Handle the air conditioner with care and check if there is any refrigerant leakage during installation. Refrigerants have no odor and can be toxic and flammable. Rapid evaporation of refrigerant may cause frostbite, cardiac arrhythmia, and / or irritation, as well as cause environmental damage.
- In the case of refrigerant leakage, shut down the appliance and disconnect from the power supply. An inspection must be performed by a qualified technician.

Additional Information About R454B Refrigerant

WARNING

- The installation and service of pipe work and appliances containing R454B refrigerant shall be performed by a qualified and licensed technician.
- When installing or using the appliance with R454B refrigerant, beware of the following symbols.

A2L

- This symbol means this appliance uses a flammable refirgerant.
  If the refrigerant is leaded and exposed to an external ignition source, there is a rist of fire.
- This symbol means that read the operation insturction carefully.
- This symbol means that personnel handling the equipment should reference to the installation manual.
- This symbol means information is available in the installation or operation instruction manual.

- Length and area limitation and recommendation should be followed. Store and install the appliance in rooms which size corresponds to the room area as specified for operation.
- The length of pipe work should be kept at minimum.
- Pipe work should be protected from physical damage and installed in floor area larger than 4m².
- All national, state, and local regulations on handling and installing R454B refrigerant should be followed.
- Do not install or store the compressor in area or room with continuously operating ignition sources.
- Prior to any work and servicing on systems containing flammable refrigerant, safety checks are necessary to ensure that the risk of ignition is minimized.

Warning and Safety

Additional Information About R454B Refrigerant

WARNING

- All individuals in the proximate area shall be instructed on the nature of work being carried out. Work in confined spaces shall be avoided. The area around the workspace shall be sectioned off. Ensure that the conditions within the area have been made safe by controlling flammable materials.
- The work area shall be checked with refrigerant detector prior to and during work to ensure the technician is aware of potentially flammable atmospheres.
- If any hot work is to be conducted on the refrigerantion equipment or any associated parts, appropriate fire extinguishing equipment shall be available to hand.
- Personnel carrying out work in relation to the refrigeration system which involves exposing any pipe work shall not use any sources of ignition in such a manner that it may lead to the risk of fire or explosion. All possible ignition sources, including cigarette, should be kept sufficiently far away from the site of work. The area around the equipment should be surveyed prior to work to make sure there are no flammable hazards or ignition risk, “NO smoking” sign shall be displayed.
- Ensure the work area is in the open or that it is adequately ventilated before breaking into the system or conducting any work that will produce heat. A degree of ventilation shall be kept during the period which work or service is carried out.
- During installation or repairs to sealed components, all electrical supplies shall be disconnect from the equipment. A permanent operating leak detection shall locate at the work area to detect potential hazardous leaks.
- The followings checks shall be applied to installation using flammable refrigerants:
  - The refrigerant charge amount is in accordance with the room size within which the refrigerant containing parts are installed.
  - The ventilation machinery and outlet are operating adequately and are not obstructed.
  - If an indirect refrigerating curcuit is being used, the secondary circuit shall be check for the presence of refrigerant.
  - Refrigerant pipe or components are installed in a position where they are unlilely to be exposed to any substance which may corrode refrigerant containing components, unless the components are constructed of materials which are inherently resistant to being corroded or are suitable protected against being corroded.
- Detection of flammable refrigerants:
  - Under no circumstances shall potential sources of ignition be used in the searching for or detection of refrigerant leaks. A halide torch or any other detector using naked flame shall not be used.
  - Electronic leak detectors shall be used to detect flammable refrigerant. Ensure that the detector is not a potential source of ignition and is suitable for the refrigerant used.
  - Leak detection equipment shall be calibrated to the refrigerant employed and the appropriate percentage of gas (25% maximum) is confirmed.
  - Leak detection fluids are suitable for use with most refrigerants, but the use of detergents containing chlorine shall be avoided as chlorine may react with the refrigerant and corrode the pipe work.
  - If a leak is suspected, all open flame shall be removed or extinguished.
  - If a leakage of refrigerant found which requires brazing, all of the refrigerant shall be recovered from the system, or isolated (by means of shut off valves) in a part of the system remote from the leak.
  - Oxygen free nitogen shall be purged through the system both before and during the brazing process.
- Decommissioning and recovery of refrigerants:
  - Refrigerant charge shall be recovered into recovery cylinders, All refrigerant recovery procedure shall follow local and national regulations. Oxygen free nitrogen shall be purged through the system after refrigerant recover.
  - When decommissioning the appliance, it is recommended that all refrigerants are recovered. The system should be isolated electrically, and recovered refrigerant should not be charged into another refrigeration system unless it has been analized to be safe to do so.
  - Equipment that once contains flammable refrigerant shall be labeled when decommissioning. The label shall be dated and signed.

Warning and Safety

Additional Information About R454B Refrigerant

WARNING

- In UL/CSA 60335-2-40, R454B refrigerant is classified as class A2L, which is mildly flammable. Therefore, R454B refrigerant is suitabe for system needing additional refrigerant charge and which will limit the area of rooms being served by the system. Similarly, the total amount of refrigerant in the system shall be less than or equal to the allowable maximum refrigerant charge. The allowable maximum refrigerant charge depends on the area of the rooms being served by the system.
- For R454B refrigerant, the maximum charge in a room shall be in accordance with the following:
  - $M_{max} = SF \times LFL \times h_0 \times A$
- Or the minimum floor area A_{min} to install an appliance with refrigerange M_c (kg) shall be in accordance with:
  - $A_{min} = M_c / (SF \times LFL \times h_0)$
    - M = Mass
    - M_{max} = Maximum charge mass
    - M_c = Mass charged
    - A = Floor area
    - LFL = Lower Flammable Limit, for R454B LFL is 0.296 kg / m^3
- Room area calculation requirements:
  - The space considered shall be any space which contains refrigerant-containing parts or into which refrigerant could be released. The floor area (A) of the smallest, enclosed occupied space shall be used in the determinaiton of refrigerant.
  - For determination of floor area (A) when used to calculate the refrigerant charge limit, the following shall apply:
    - The floor area (A) shall be defined as the room area enclosed by the projection to the base of the walls, partitions and doors of the space in which the appliance is installed.
    - Space connected by only drop ceilings, ductwork, or similar connections shall not be considered as a single space. Unit mounted higher than 70 $^{55}/_{64}$ inches and spaces divided by partition walls that are no higher than 62 $^{63}/_{64}$ inches shall be considered a single space.
    - Rooms on the same floor and connected by an open passageway between the space can be considered a single room when determining compliance to A_{min}, if the passageway complies with all the followings:
      1. It is a permanent opening.
      2. It extends to the floor.
      3. It is intened for people to walk through.
    - The area of the connected rooms, on the same floor, connected by permanent opening in the walls and / or doors between occupied space, including gaps between the wall and the floor can be considered a single room when determining compliance to A_{min}, provided all of the following conditions are met as [Fig 1-1].
      - Low level opening:
      1. The opening shall not be less than Anv_{min} in [Table 1-1].
      2. The area of any opening above 11 $^{13}/_{16}$ inches from the floor shall not be cinsidered in determining compliance with Anv_{min}.
      3. At least 50% of the opening area of Anv_{min} shall be below 7 $^{7}/_{8}$ inches from the floor.
      4. The bottom of the opening is not more than 3 $^{15}/_{16}$ inches from the floor.
      5. The opening is a permanent opening that cannot be closed.
      6. For openings extending to the floor the height shall not be less than $^{25}/_{32}$ inches above the surface of the floor covering.

Additional Information About R454B Refrigerant

WARNING

- High level opening:

1. The opening shall not be less than 50% of Anv_{min} in [Table 1-2].
2. The opening is a permanent opening that cannot be closed.
3. The opening shall be at least 59 inches above the floor.
4. The height of the opening is not less than $^{25}/_{32}$ inches.

- Room size requirement:

1. The room into which refrigerant can leak, plus the connected adjacent room(s) shall have a total area not less than A_{min}. A_{min} is shows in [Table 1-4].
2. The room area in which the unit is installed shall not be less than 20% A_{min}. A_{min} is shows in [Table 1-4].

- The requirement for the second opening can be met by drop ceiling ventilation ducts, or similar arrangements that provide an airflow path between the connected rooms.
- The minimum opening for natural ventilation (Anv_{min}) in connected rooms is related to the floor area (A). The actual refrigerant charge in the system (M_c), and the allowable maximum refrigerant charge in the system (M_{max}). Anv_{min} can be determined according to [Table 1-2].

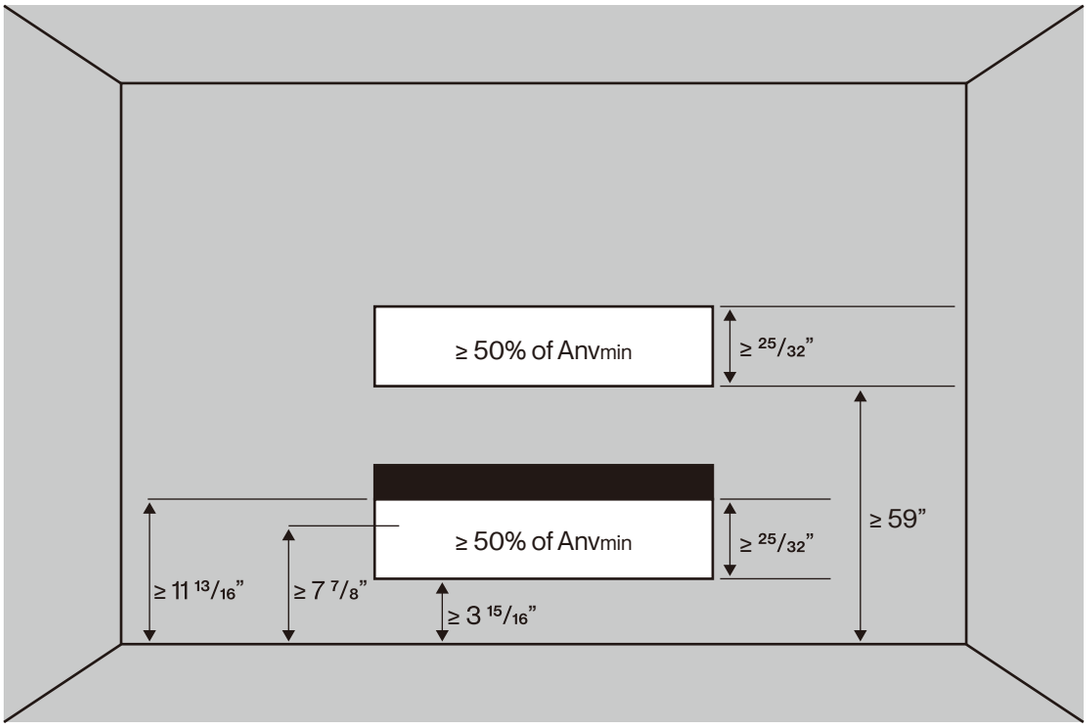

Fig 1-1 Opening Requirement for Connected Rooms

Warning and Safety

Additional Information About R454B Refrigerant

WARNING

A (sq. ft)	M_c (lb oz)	M_{max} (lb oz)	An_{vmin} (sq ft)
40	9lb 9oz	2lb 10oz	0.9
50	9lb 9oz	3lb 5oz	0.8
60	9lb 9oz	4lb 0oz	0.7
70	9lb 9oz	4lb 10oz	0.6
80	9lb 9oz	5lb 5oz	0.6
90	9lb 9oz	6lb 0oz	0.5
100	9lb 9oz	6lb 10oz	0.4
110	9lb 9oz	7lb 5oz	0.3
120	9lb 9oz	8lb 0oz	0.2
130	9lb 9oz	8lb 10oz	0.2
140	9lb 9oz	9lb 5oz	0.1
150	9lb 9oz	10lb 0oz	0.0
160	9lb 9oz	10lb 10oz	0.0

Table 1-2 The Minimum Opening Area for Connected Rooms

- For appliances serving one or more rooms with an air duct system, the floor area calculation shall be determined based on the total area of the conditioned space connected by ducts. Taking into consideration that the circulating airflow distributed to all the rooms by the appliance integral indoor fan will mix and dilute the leaking refrigerant before entering any room.
- The allowed maximum refrigerant charge and required minimum floor area:
  - If the fan incorporated to an appliance is continuously operated or operation is initiated by a refrigerant detection system with a sufficient circulation airflow rate. The allowable miximum refrigerant charge (M_{max}) and the required minimum floor area (A_{min} / TA_{min}) is shown in [Table 1-3] and [Table 1-4]

A / TA (sq. ft)	M_{max} (lb oz)	A / TA (sq. ft)	M_{max} (lb oz)
40	2lb 10oz	160	10lb 10oz
50	3lb 5oz	170	11lb 5oz
60	4lb 0oz	180	12lb 0oz
70	4lb 10oz	190	12lb 10oz
80	5lb 5oz	200	13lb 5oz
90	6lb 0oz	210	14lb 0oz
100	6lb 10oz	220	14lb 10oz
110	7lb 5oz	230	15lb 5oz
120	8lb 0oz	240	16lb 0oz
130	8lb 10oz	250	16lb 10oz
140	9lb 5oz	260	17lb 5oz
150	10lb 0oz		

Table 1-3 The Allowable Maximum Refrigerant Charge

Warning and Safety

Additional Information About R454B Refrigerant

WARNING

M_c (lb oz)	A_{min} / TA_{min} (sq. ft)	M_c (lb oz)	A_{min} / TA_{min} (sq. ft)
4lb 6oz	66.1	11lb 0oz	165.3
4lb 13oz	72.7	11lb 7oz	171.9
5lb 4oz	79.3	11lb 14oz	178.5
5lb 11oz	86.0	12lb 5oz	185.1
6lb 2oz	92.6	12lb 12oz	191.7
6lb 9oz	99.2	13lb 3oz	198.4
7lb 0oz	105.8	13lb 10oz	205.0
7lb 7oz	112.4	14lb 1oz	211.6
7lb 15oz	119.0	14lb 8oz	218.2
8lb 6oz	125.6	14lb 15oz	224.8
8lb 13oz	132.2	15lb 6oz	231.4
9lb 4oz	138.8	15lb 14oz	238.0
9lb 11oz	145.5	16lb 5oz	244.6
10lb 2oz	152.1	16lb 12oz	251.2
10lb 9oz	158.7	17lb 3oz	257.9

Table 1-4 The Required Minimum Floor Area

M_c (lb oz)	Q_{min} (CFM)	M_c (lb oz)	Q_{min} (CFM)
4lb 6oz	119	11lb 0oz	298
4lb 13oz	131	11lb 7oz	310
5lb 4oz	143	11lb 14oz	322
5lb 11oz	155	12lb 5oz	334
6lb 2oz	167	12lb 12oz	346
6lb 9oz	179	13lb 3oz	358
7lb 0oz	191	13lb 10oz	370
7lb 7oz	203	14lb 1oz	382
7lb 15oz	215	14lb 8oz	394
8lb 6oz	227	14lb 15oz	405
8lb 13oz	239	15lb 6oz	418
9lb 4oz	251	15lb 14oz	430
9lb 11oz	263	16lb 5oz	442
10lb 2oz	275	16lb 12oz	454
10lb 9oz	287	17lb 3oz	466

Table 1-4 The Required Minimum Floor Area

Warning and Safety

Additional Information About R454B Refrigerant

WARNING

- The allowable maximum refrigerant charge of [Table 1-3] or the required minimum floor area of [Table 1-4] is available only if the following conditions are met:
  - Minimum velocity of 3.28ft/s, which is calculated as the indoor unit airflow divided by the nominal face area of the outlet. The grill area shall not be deducted. Minimum air flow rate must meet the corresponding values in [Table 1-5], which is related to the actual refrigerant charge of the system (M_C).
- The maximum refrigerant limit described above applies to unventilated areas. If additional measures such as mechanical ventilation or natural ventilation are implemented, the maximum refrigerant charge can be increased or the minimum floor area can be reduce.

About Installation

WARNING

- Do not alter, change, or modify the appliance.

CAUTION

- Prevent children from accessing the work area during installation to prevent unforeseeable accident.
- The base of the outdoor unit must be firmly fixed.
- Carry out a test run after the installation.
- The packaging materials are recyclable and should be disposed of in a separate waste bins.
- The appliance should not be installed in a location where the air outlet of the indoor or outdoor unit is obstructed. Obstruction of these opening may cause damage or malfunctions to the appliance.

About Power and Electricity

WARNING

- Ensure that the power voltage corresponds to that stamped on the rating plate.
- A fuse or overload protection device with a suitable capacity be installed.
- The appliance must be fitted with means for disconnection from the main power supply under over-voltage category III conditions. All electrical wiring must follow federal, state, or local regulations.
- When working on the electric terminals, ensure the appliance is disconnected from the power supply.
- Make sure the appliance is properly grounded to prevent electric shock.

WARNING

- Do not bend, tug, or compress the power cord during installation to prevent damaging the power cord. Damaged electrical cord should be replaced by a qualified electrician.

Warning and Safety

About Operation





- Do not disconnect the appliance from the power supply before shutting off the appliance. This might create a spark and potentially cause a fire.
- Do not place flammable substances near the appliance.
- Do not climb onto or place any objects on the appliance.
- Do not insert any objects into the appliance to prevent damage or injury.
- Do not obstruct the air inlet or outlet.



- Only use the appliance as instructed in this booklet. These instructions are not intended to cover every possible condition and situation. As with any electrical household appliance, common sense and caution are therefore always recommended for usage and maintenance.

Encountering Troubles





- In the case of the appliance emitting smoke, burning smell, leaking water, or making unusual noise, shut down the appliance and disconnect from the power supply immediately. Contact a qualified technician for inspection and repair.

Installation Info

Installation Location

- Avoid installing the compressor in corrosive environment. Corrosive elements include, but not limited to sodium chloride, sodium hydroxide, sodium sulfate, and other compounds commonly found in ocean water, sulfur, chlorine, fluorine, fertilizers, and various chemical contaminants from industy or manufacturing plants.
- Avoid locations where lawn sprinklers or waste water would directly spray on the unit for prolonged period.
- Avoid installing the compressor near bedrooms to minimize noise disturbance.
- When installing in coastal areas, place the unit on the side of the building away from the water front.
- When installing in cold climate, elevated pad might needed to help drainage of melted ice during defrost cycle. A snow drift barrier should also be installed around the unit to prevent build up of snow.
- When installing the compressor on a roof, make sure the roof can support the weight of the compressor. Dampening would needed to minimize sound and vibration.
- Follow the clearance requirement as below:

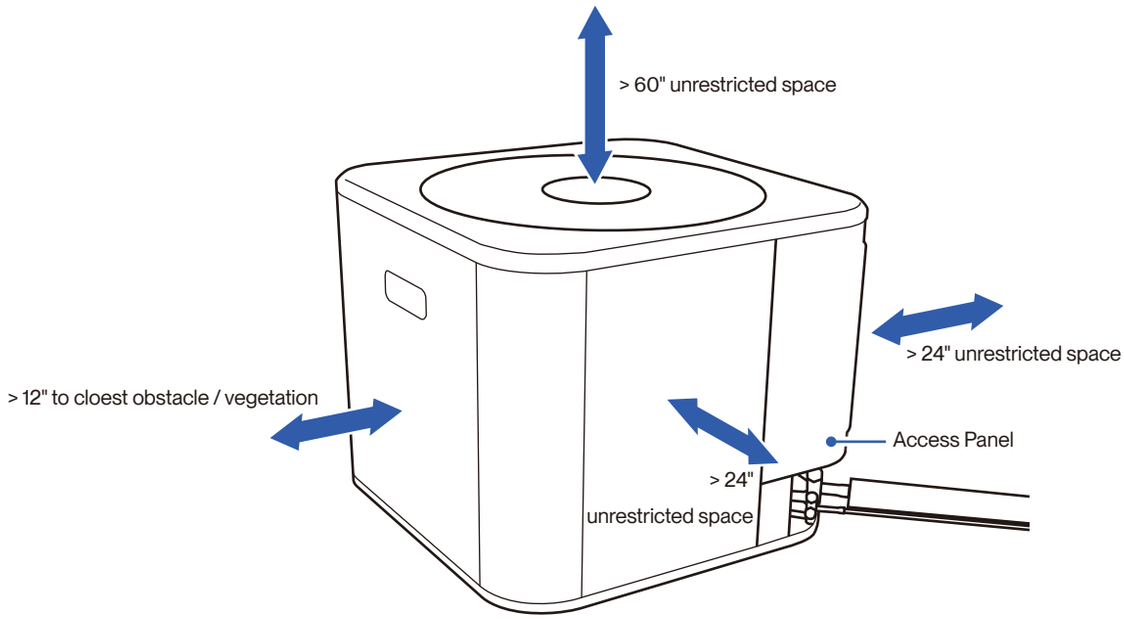

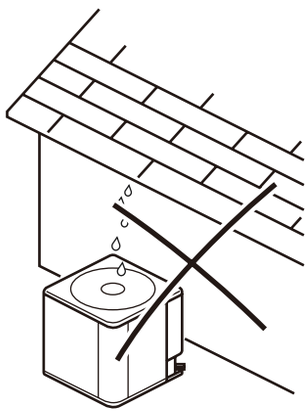

Avoid water or snow from falling into the unit for prolonged period

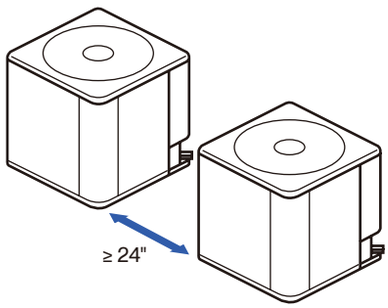

Place units 24" apart from each other

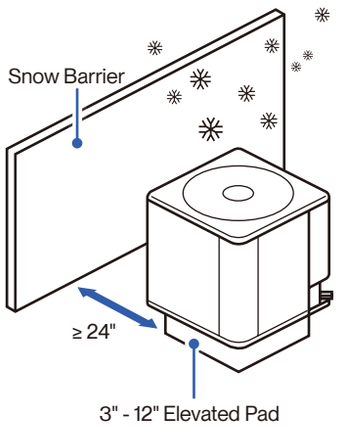

Place snow barrier and elevated pad if using the unit in snowy climate

Installation Info

Refrigerant Lineset

- Only use line sizes indicated in below table and follow line length limiitation.

Model	OD Diameter (inch)		Total Equivalent Length (ft)				
			25	50	75	100	164
	Liquid Line	Suction Line	Maximum Elevation Difference (ft)				
048-T-24K-ODU	3/8	3/4	25	50	45	40	/
048-T-36K-ODU	3/8	3/4	25	50	50	40	/
048-T-48K-ODU	3/8	7/8	25	50	50	40	35
048-T-60K-ODU	3/8	7/8	25	50	50	40	35

Maximum Line Lengh

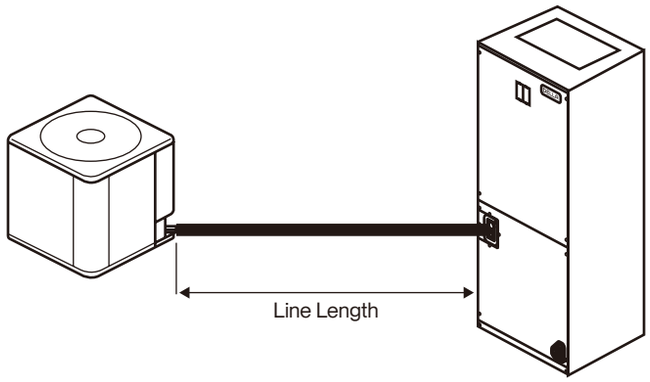

Maximum Elevation Difference

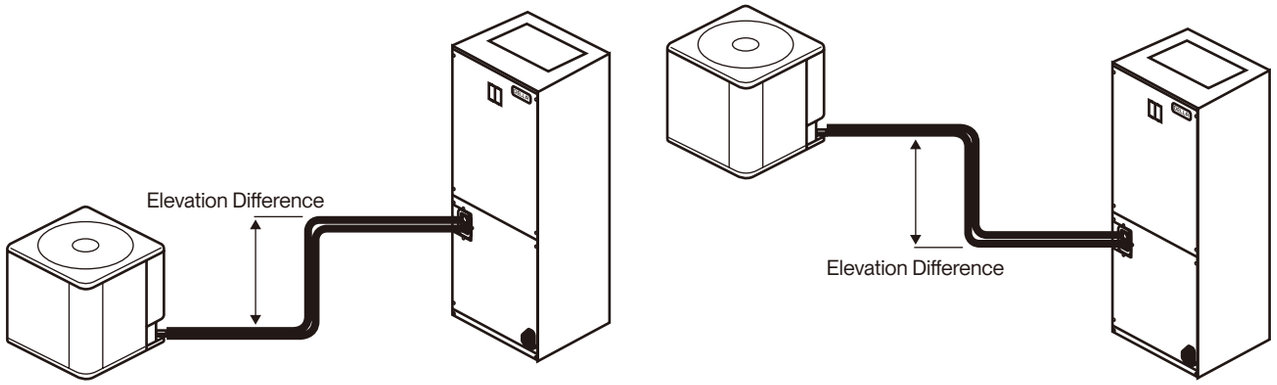

Installation Info

Pipe Length and Additional Refrigerant Info

	048-T-24K-ODU	048-T-36K-ODU	048-T-48K-ODU	048-T-60K-ODU
Stand Charge Pipe Length	25 ft	25 ft	25 ft	25 ft
Standard Charge Capacity	4.74 lb	6.28 lb	8.82 lb	8.82 lb
Max. Pipe Length	100 ft	100 ft	165 ft	165 ft
Max. Elevation Difference	50 ft	50 ft	50 ft	50 ft
Additional Refrigerant Charge	0.0335 lb / ft	0.0335 lb / ft	0.0335 lb / ft	0.0335 lb / ft
Type of Refrigerant	R454B	R454B	R454B	R454B

Standard Refrigerant Charge+ Addition Refrigerant
= Total Refrigerant Amount

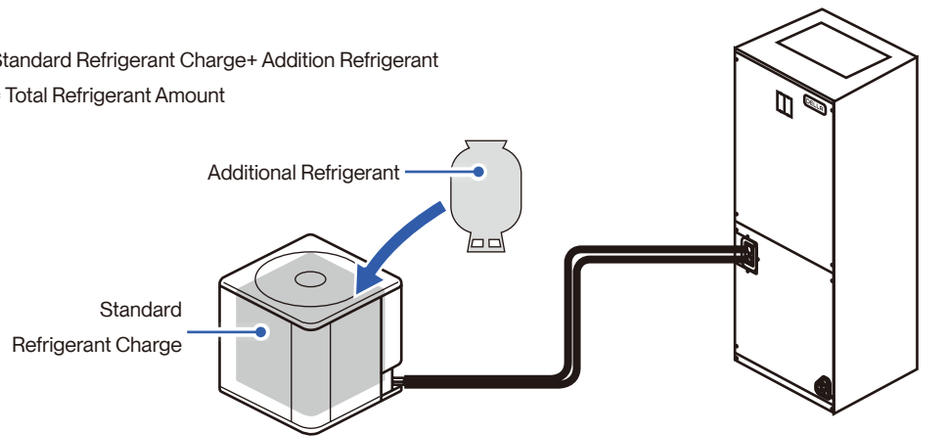

Total Refrigerant Capacity

Model	Refrigerant	LFL (lb / ft³)	h0 (ft)	Pipe Length (ft)				
				25	49	66	98	164
048-T-24K-ODU	R454B	0.0185	7.2	4.74 lb	5.57 lb	6.12 lb	7.22 lb	/
048-T-36K-ODU				6.28 lb	7.11 lb	7.66 lb	8.76 lb	/
048-T-48K-ODU				8.82 lb	9.65 lb	10.2 lb	11.3 lb	13.5 lb
048-T-60K-ODU				8.82 lb	9.65 lb	10.2 lb	11.3 lb	13.5 lb

Minimum Floor Area

Model	Refrigerant	LFL (lb / ft³)	h0 (ft)	Pipe Length (ft)				
				25	49	66	98	164
048-T-24K-ODU	R454B	0.0185	7.2	71 sq. ft	26 sq. ft	28 sq. ft	33 sq. ft	/
048-T-36K-ODU				95 sq. ft	32 sq. ft	35 sq. ft	40 sq. ft	/
048-T-48K-ODU				40 sq. ft	44 sq. ft	47 sq. ft	52 sq. ft	62 sq. ft
048-T-60K-ODU				40 sq. ft	44 sq. ft	47 sq. ft	52 sq. ft	62 sq. ft

Installation Info

Refrigerant Line Insulation

- The suction line must always be insulated.
- Liquid line insulation is optional.
- The liquid line should not be come into direct metal to metal contact with the suction line.

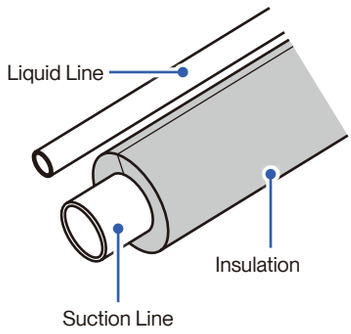

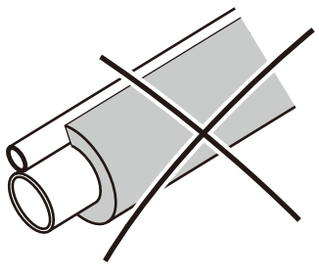

Reusing Existing Refrigerant Line

- It is recommended to install matched outdoor and indoor system. All of the manufacturer's split systems are AHRI rated with TXV indoor units. Installing approved matched system maximize efficiency, optimize performance and has best overall system reliability.

- For retrofit applications where the existing refrigerant lines will be used, ensure that the refrigerant line are the correct size.
- It is not recommended to use suction line larger than standard size, in which will result poor oil return for inverter compressor.
- Clean the existing refrigerant line by purging nitrogen into the lineset.

Installation Info

Refrigerant Line Routing

When isolating linesets from joists, rafters, walls, or other structural elements, comply with all national, state, and local codes.

Refrigerant line should be arranged to minimize noise and vibration within the building structure.

- Use isolation type hangers when the refrigerant line have to be fastened to floor joists or other framing.
- Isolation hangers should be used with refrigerant lines traverse stud space or enclosed ceilings.
- Isolate and insulate the refrigerant line where it pass through a wall or sill.
- Isolate the refrigerant line from all ductwork.
- Minimize the number of 90° turns on the refrigerant line.
- Secure suction line using isolators every 8ft. Secure liquid line directly to insulated suction line using tape, wire, or other appropriate method every 8ft.

Isolation from Joist / Rafter

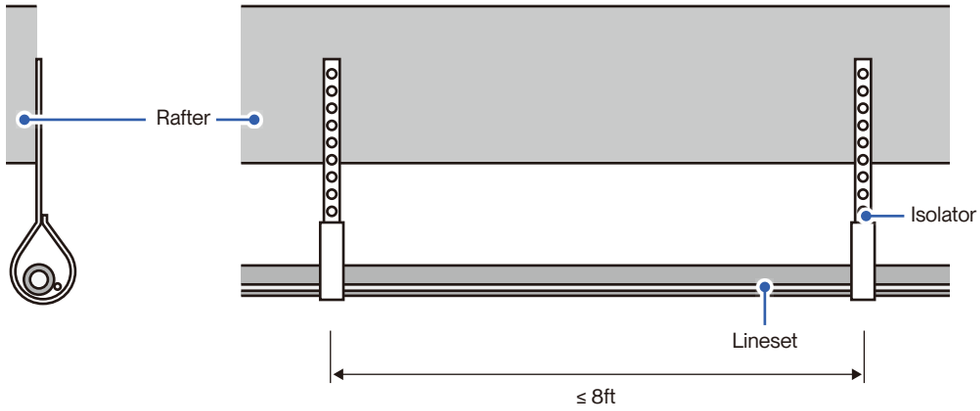

Isolation in Wall Space

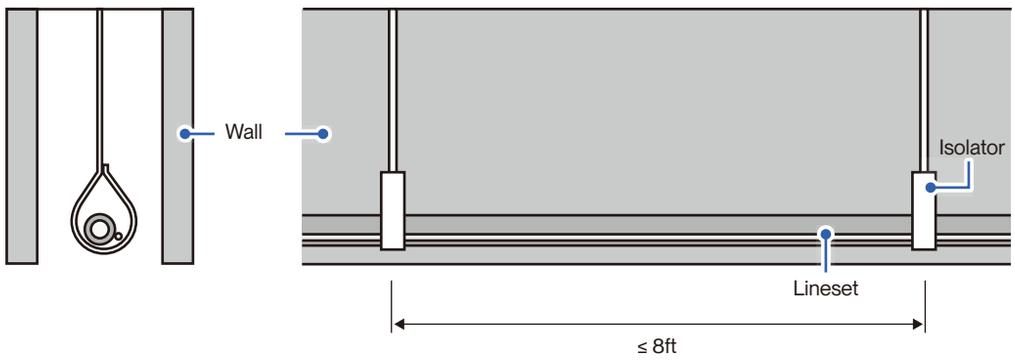

Isolation in Wall Space

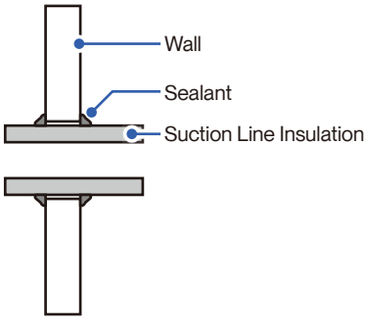

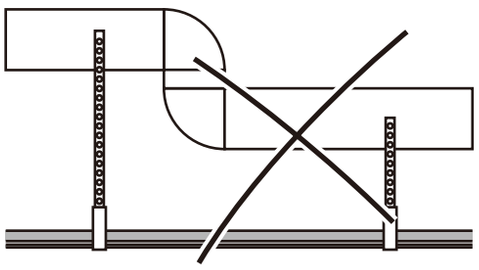

- Do not hand lineset onto ductwork.

Installation Info

Cutting the Refrigerant Pipe

Cut new or existing refrigerant line to your desired lenghth.

1. Cut the copper pipe with a pipe cutter.
2. Remove any burrs or rough edges with a reamer with the pipe facing downward.

- The opening of the pipe must face downward to the ground when deburring to prevent chips or dest from entering the pipe.

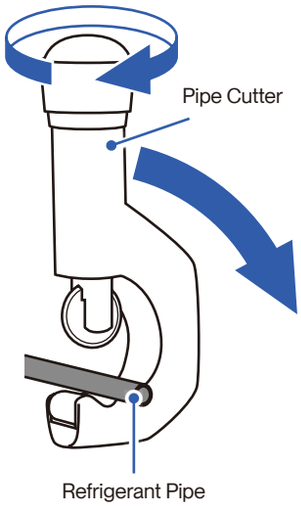

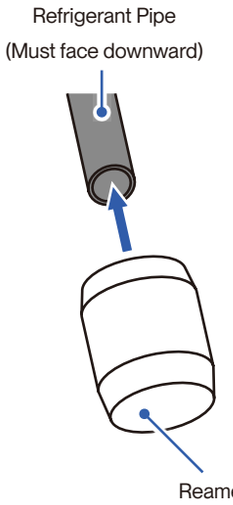

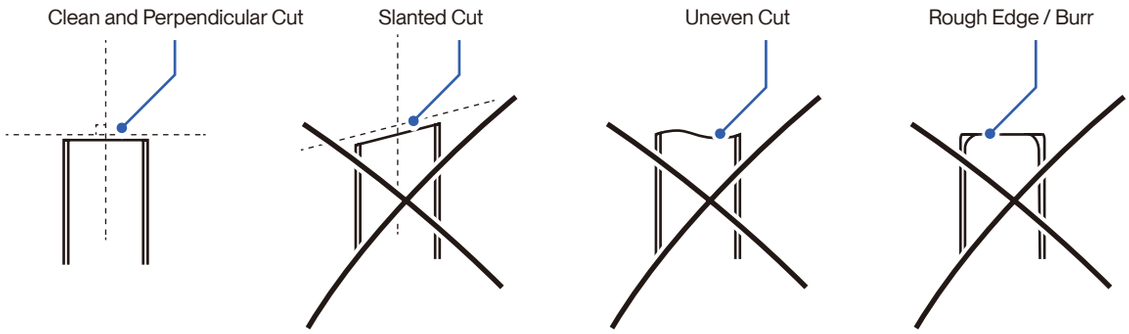

Installation Info

Flaring

For flaring connection, flaring nut must be installed to the refrigerant pipe before flaring the end.

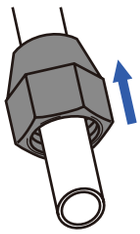

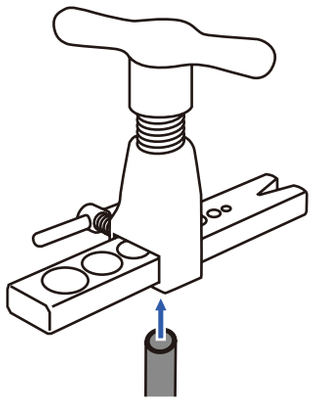

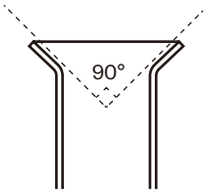

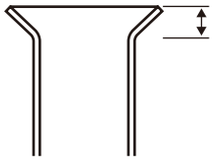

Outer Diameter	Flaring Size
3/8"	0.03" - 0.04"
3/4"	0.02" - 0.03"
7/8"	0.02" - 0.03"

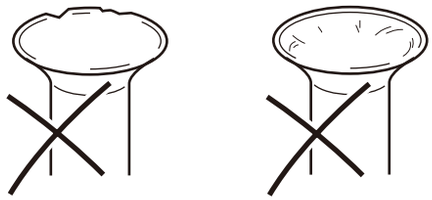

- Do not use refrigerant pipe with dirty and / or imperfect flaring, it will result in improper seal and refrigerant leak.

Installation Info

Refrigerant Line Connection and Brazing Preview

CAUTION

- Do not install the connecting refrigerant pipe unitl both outdoor compressor and indoor air handler units have been installed.
- Handle the refrigerant pipe with care, any damage, dent, or deform on the pipe would cause refrigerant leak and drastically reduce efficiency of the unit.

Due to the combusive nature of R454B refrigerant, this unit requires connection pipe as an extension for the refrigerant port.
The connection pipes connect to the outdoor unit using flare connection, while the rest of the refrigerant line connections will require brazing.
Follow the installation indicated as follow:

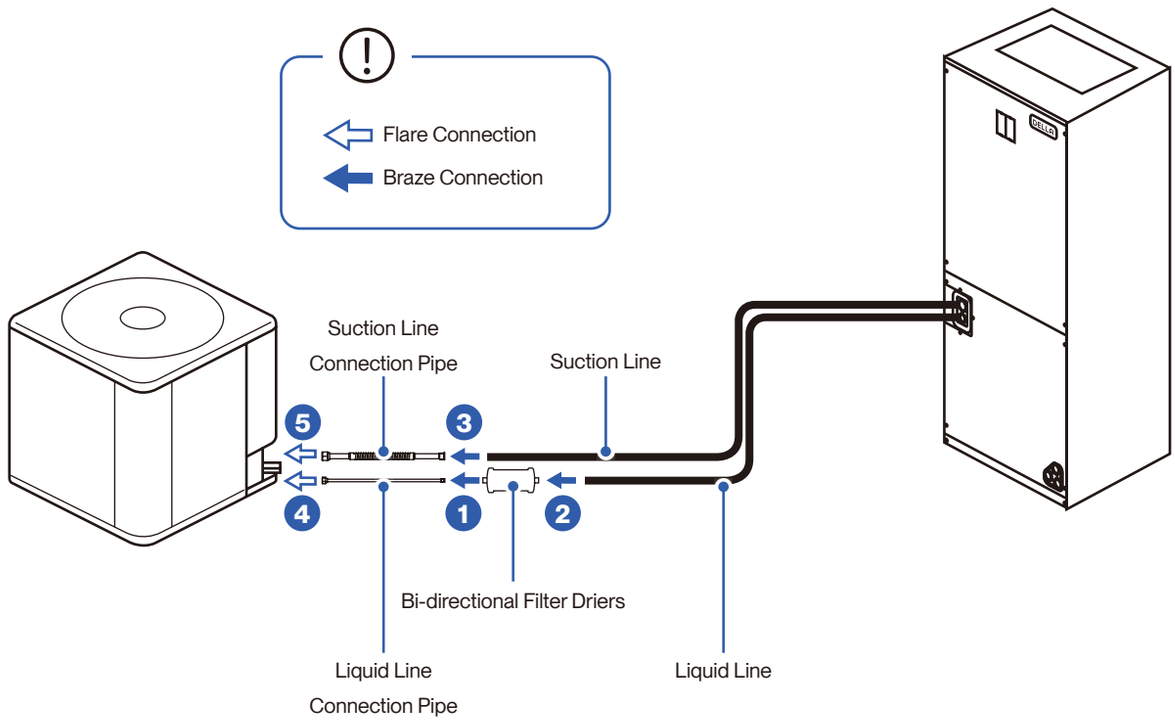

- Refrigerant pipes should be connected to the indoor handler unit FIRST, and then connects to the outdoor compressor unit.
- Please refer to your indoor handler unit installation manual for connection instruction.

Installation Info

Refrigerant Line Connection and Brazing

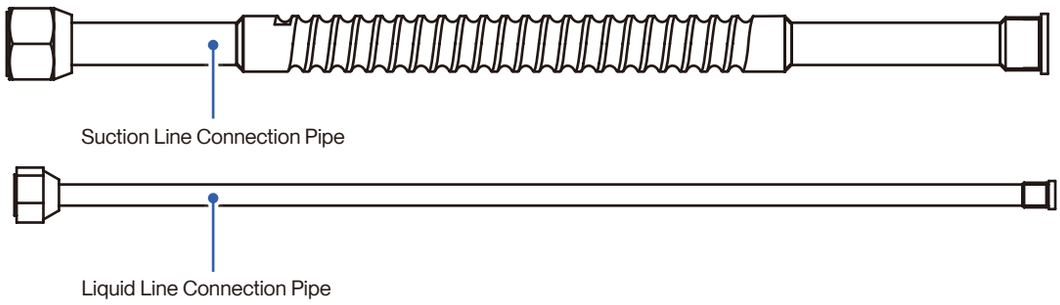

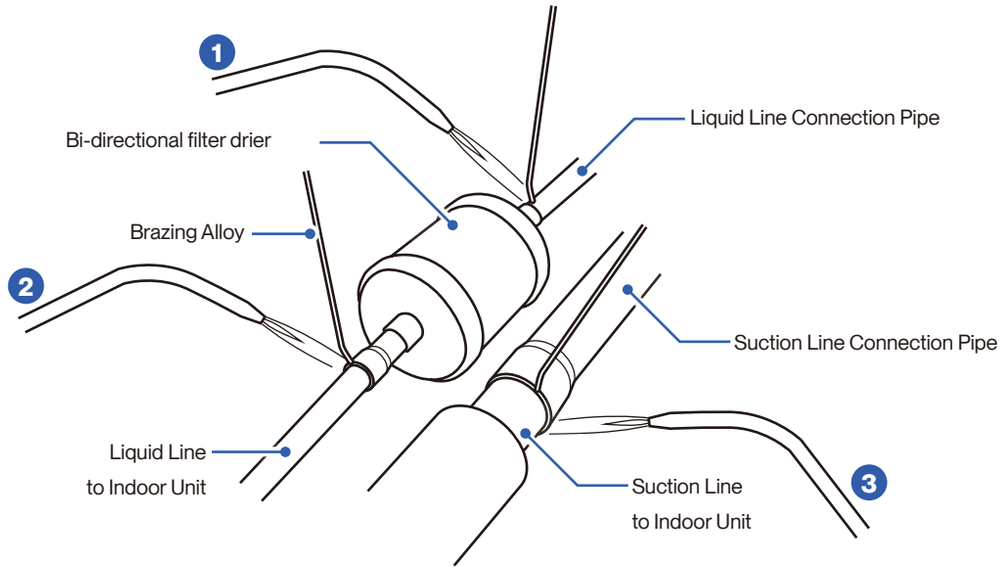

1. Connect a bi-directional filter drier (without active alumina) to the liquid line connection pipe.
2. Connect the liquid line to the bi-directional filter.
3. Connect the suction line to the suction line connection pipe.
4. Braze all the connection points. Make sure the brazing material throughly fill in the connection.

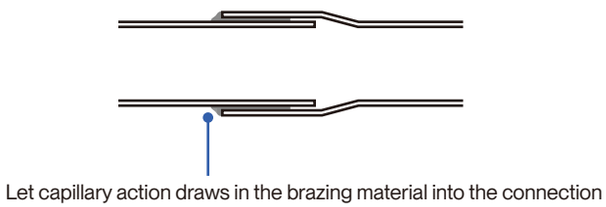

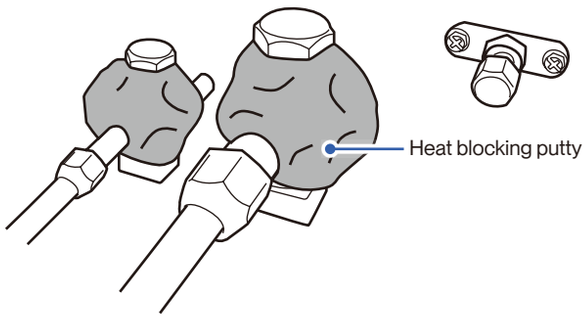

- Place heat blocking putty around refrigerant valve and sensitive sensors before brazing to protect parts from high heat.

Installation

Installation Info

Refrigerant Line Connection and Brazing

1. Remove the protective caps from the outdoor unit's refrigerant port.
2. Align the connection pipes to the refrigerant port.
3. Tighten the flare nut according to the torque requirement as below:

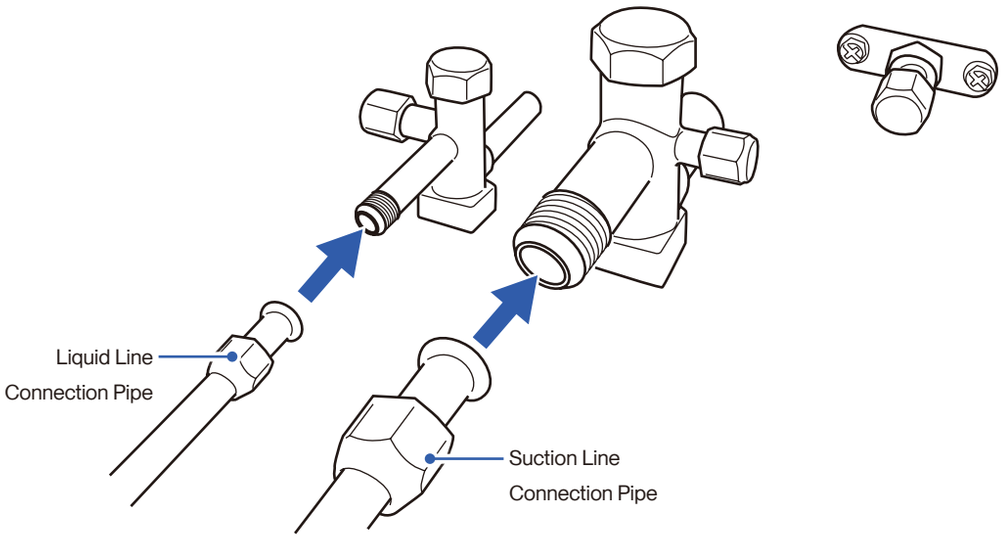

Pipe Size	Torque Value (in-lbs)	Torque Value (ft-lbs)
3/8"	327 - 372	27.25 - 31
3/4"	620 - 664	51.6 - 55.3
7/8"	690 - 735	57.5 - 61.25

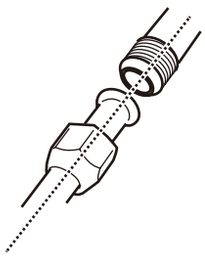

- Align connection pipe to refrigerant port

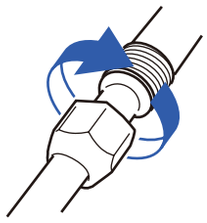

- Hand tighten the flare nut

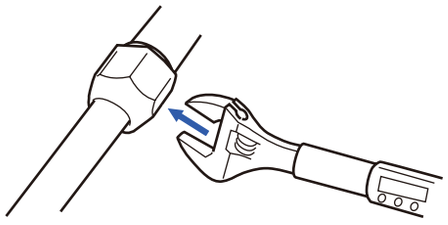

- Tighten the flare nut to specific torque requirement

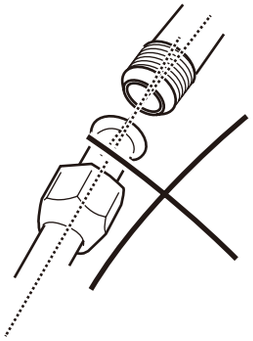

- Make sure the connection pipe align straight to the refrigerant port, otherwise it might result in micro damage to the flare nut or refigerant leak.

Installation Info

Pressure Check

A nitrogen pressure test should be performed after the refrigerant lineset is brazed in to check there is no leak in the system.

1. Before pressurize the lineset, check if there is any leak on the schrader core.
2. Connect the nitrogen tank to one of the service port, then open all the valve core removal tool ball valve and purge the refrigerant lineset with nitrogen before pressurizing the lineset.
3. Close the ball valve on the valve core removal tool not connected to the nitrogen tank.
4. With the help of pressure probes / manifold gauges, pressurize the refrigerant line to 250 PSIG.
5. Allow the pressure to stabilize and hold for at least 30 minutes. Check all the connection with bubble test and make sure there is no leak at any joint.
6. After making sure there is no leak, slowly release nitrogen from the lineset to the air by opening the ball valves on the valve core removal tool.
7. Place schrader cores back into the valves after the pressure test is conducted, and disconnect the dry nitrogen tank from the system

- In the case of a leak, check and retighten all your pressurizing equipment, including core removal tool, charging hose, and gauges. Cut, reconnect and braze refrigerant line if necessary. A leak check must be performed again after correction until there is no leak from the system.

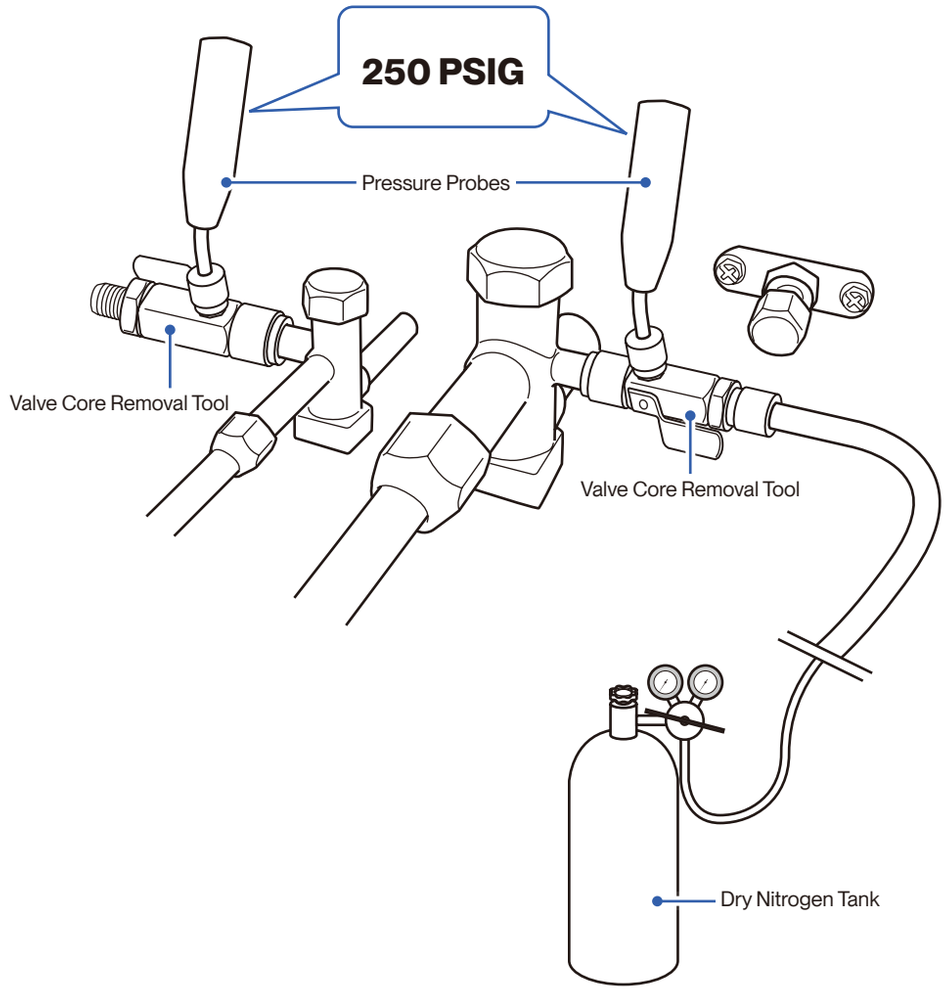

Installation Info

Evacuation (Single Hose setup)

1. Attach valve core removal tools to the service ports.
2. Remove the schrader core from the suction line valve.
3. Connect the vacuum hose from the vacuum pump to the valve core removal tool on the suction line valve.
4. Attach a micron gauge to the valve core removal tool on the liquid line valve.
5. Open the ball valve on the suction line side valve core removal tool, and close the ball valve on the liquid line side valve core removal tool. Turn on the vacuum pump and pull vacuum until the micron gauge display 350 micron or lower.
6. Shut off all ball valves on the valve core removal tools, and turn off the vacuum pump.
7. Leave the system connected with the micron gauge for 15 minutes. Make sure the value does not raise higher than 500 micron.
   NOTE: In the case of the value raising above 500 micron, check every joint for any possible source of leak, perform pressure test and evacuation again after addressing leak source.
8. Once completing vacuum pumping, disconnect the vacuum hose from the AC, and re-attach the telescopic rod with schrader core back into the valve core removal tool. Make sure the ball valve remain close in this step.
9. Open the ball vavles and screw the schrader cores back into the service port.
10. Detatch the valve core removal tool from the AC and put the service port caps back in place.

- Do not remove the valve cap and do not open the refrigerant valves when vacuum pumping the refrigerant line.

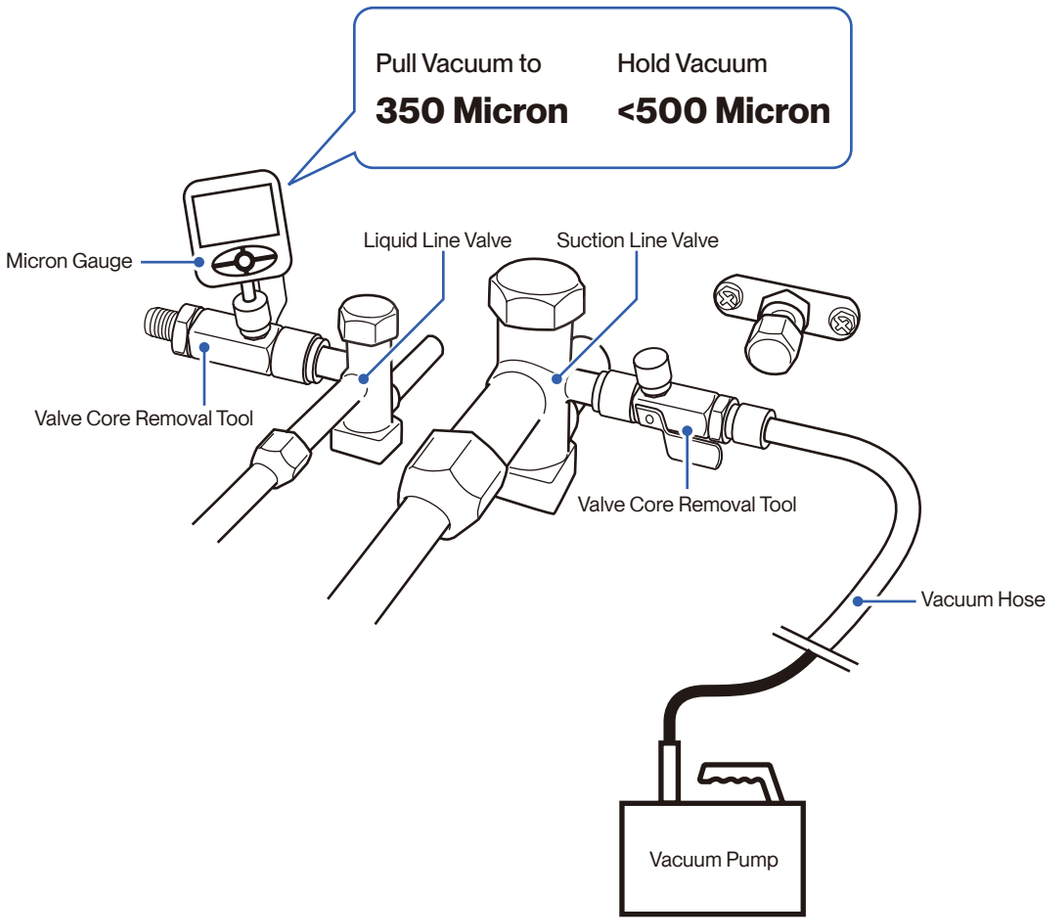

Installation Info

Refrigerant Valves

Pressure test and evacuation must be completed before opening the refrierant valves.

1. Remove the refrigerant valve caps.
2. Open the suction line valve. Turn the valve counterclockwise until the valve stem touch the rolled edge.
3. Turn the valve stem back in by about 1/4 to 1/6 turn to prevent leak.
4. Repeat the same procedure for the liquid line valve.
5. Put the refrigerant valve cap back to its original place after releasing refrigerant into the lineset.

CAUTION

- Always open the suction line valve first, and then the liquid line valve
- Becareful when opening the liquid line refrigerant valve. Turn the valve step counterclockwise until the valve stem touches the rolled edge. Do not open the valve stem any further. Failing to follow this will result in abrupt release of refrigerant charge and may lead to injury or property damage.

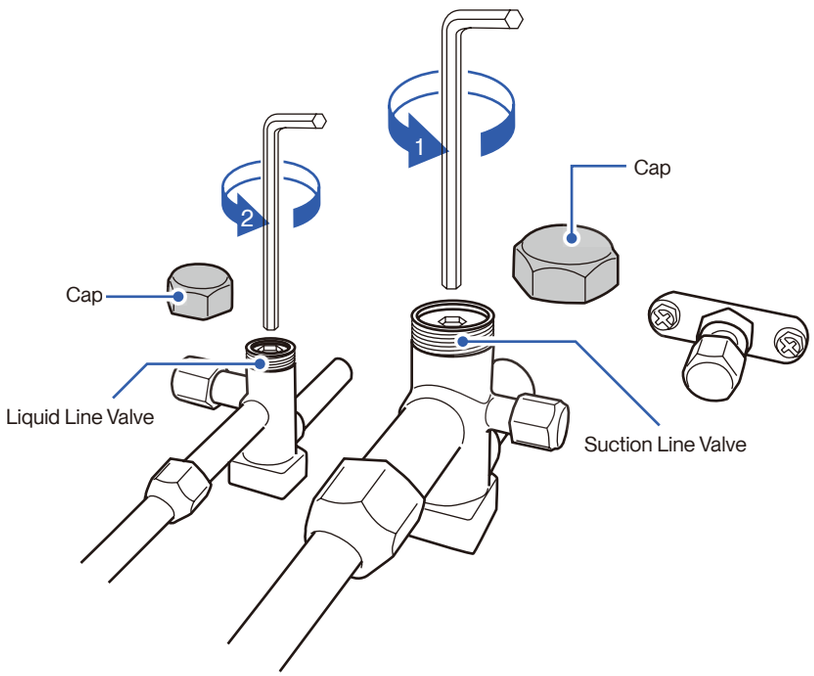

Installation Info

Low Voltage Wire Connection

The maximum length of low voltage wiring should be define as the length from the outdoor unit to the indoor handler unit and the thermostat. Field installed electrical conduit is required at low voltage wire entry point. Animals such as frogs, snakes, spiders and other natural elements may get into the control box and damaging the PCB. Manufacturer reserves the right to reject warranty claim on PCB if installation requirements are not comply.

	Control Wiring
Wire Size	18 AWG
Max. Wire Length	164ft

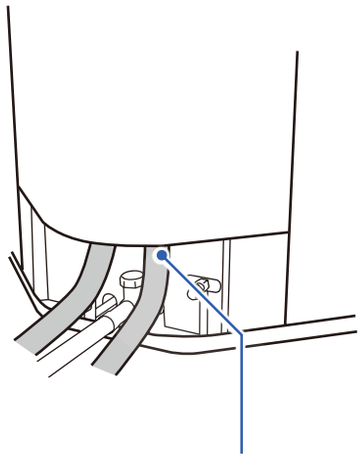

Seal to the wiring entry point

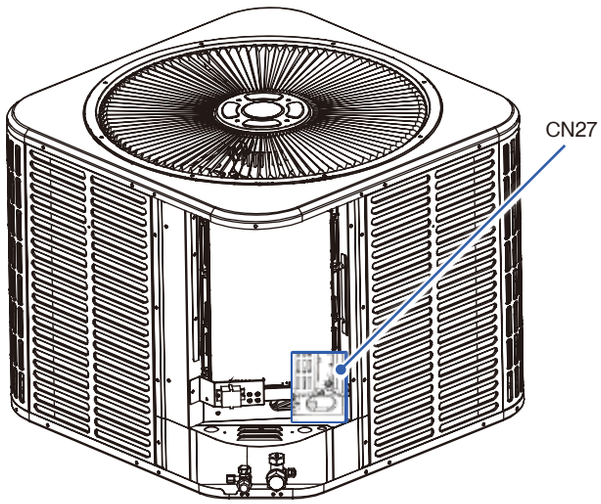

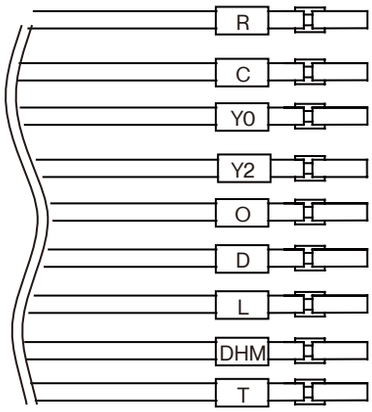

Thermostat wiring harness

Class 2 low voltage wiring should not be run in conduit with main power wiring and must be seperated from power wiring, unless class 1 wire of proper voltage rating is used.

- Low voltage control wiring should be color coded 18 AWG.
- Refer to wiring diagrams attached to indoor and outdoor sections to be connected.
- Make sure separation of control wiring and power wiring has been maintained.

Installation Info

Low Voltage Wire Connection

2 Stages, 2 Step, Heat Pump

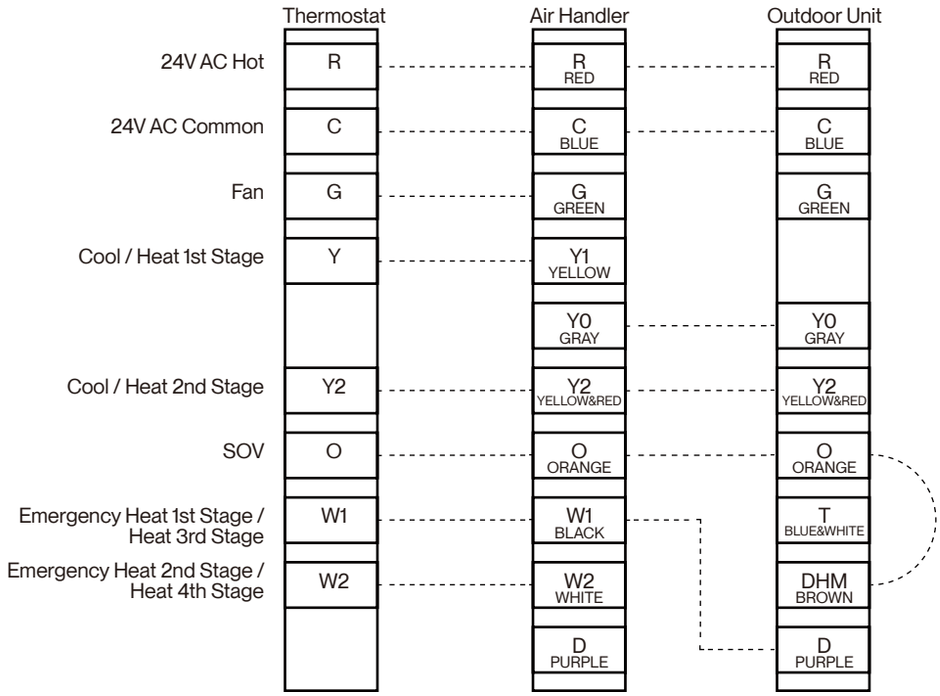

2 Stages, 2 Step, Cooling Only

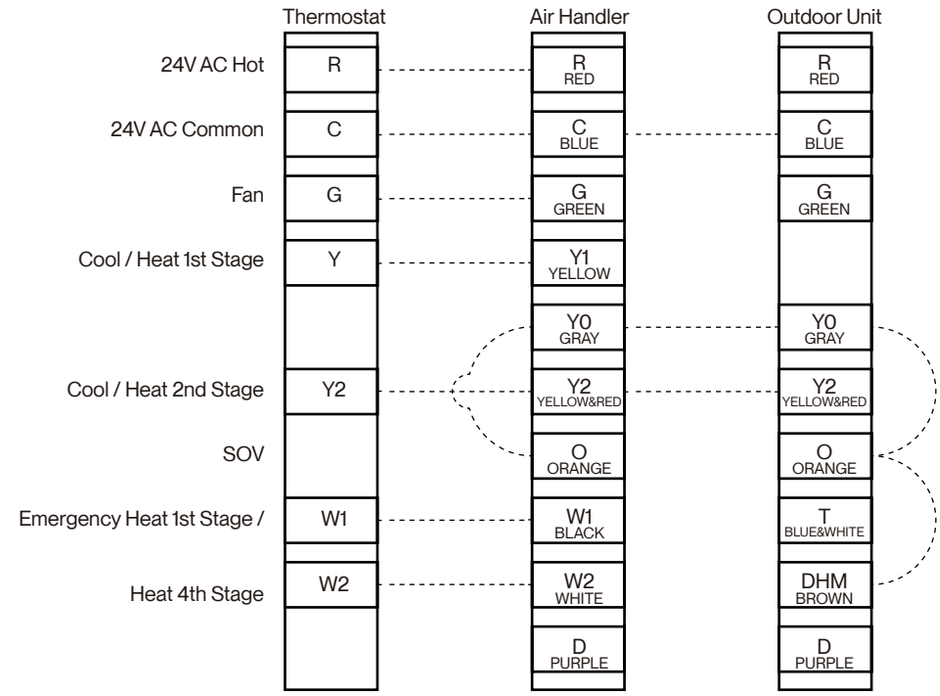

Installation Info

Low Voltage Wire Connection

Single Step, Heat Pump

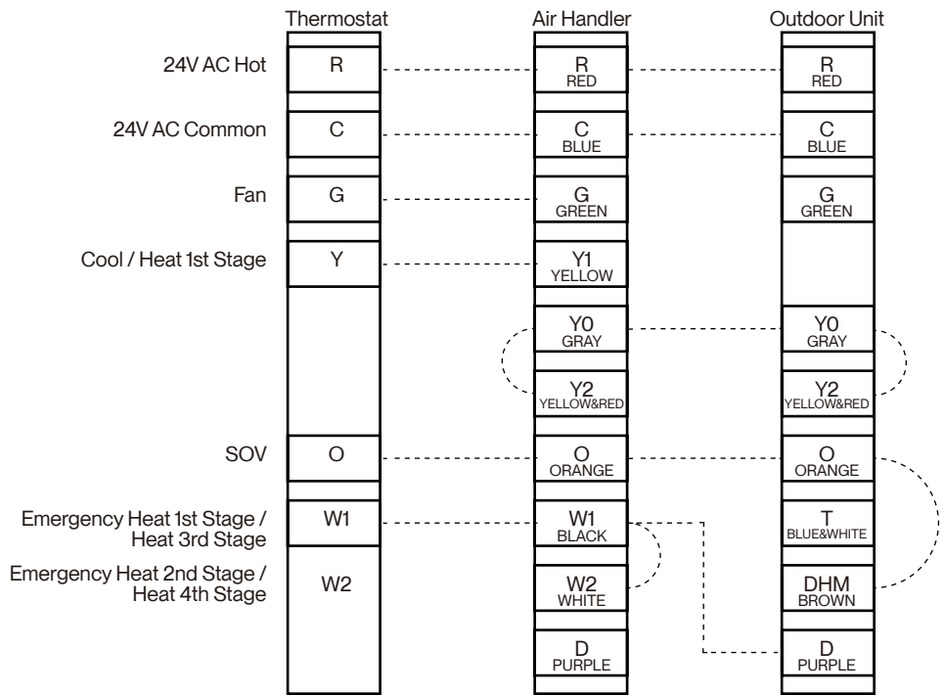

Single Step, Cooling Only

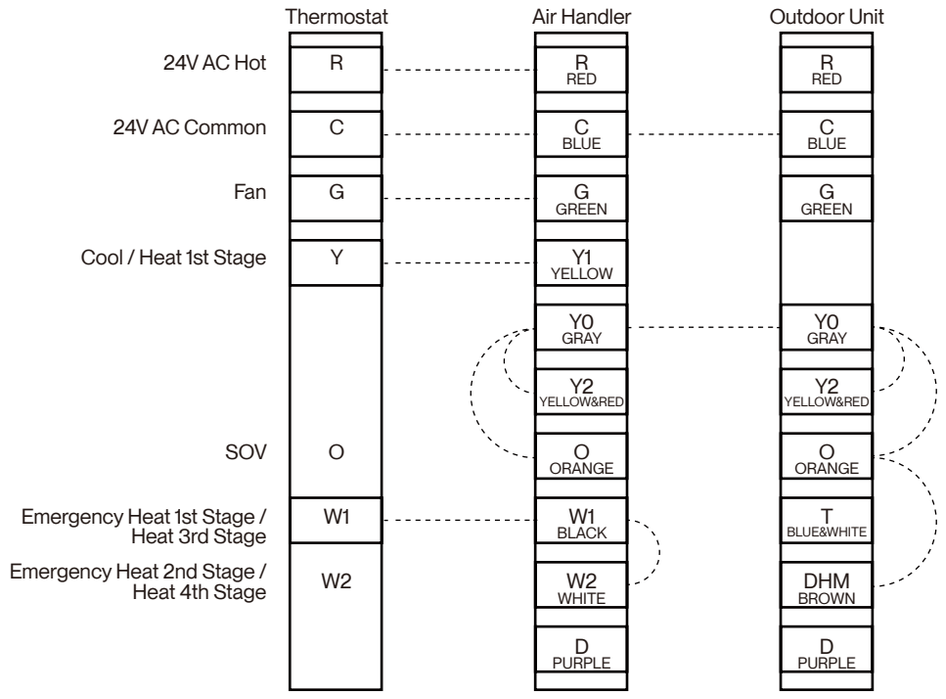

Installation Info

High Voltage Power Supply

WARNING

- Follow all electrical safety precausions when installing, testing, servicing, and troubleshooting this product. Failing to follow precautions when working with live electrical components could result in death or serious injury.

The power supply must corresponds to that stamped on the rating plate.

Power wiring must comply with national, state, and local codes.

Locate and follow the wiring diagram printed on the inside of the control box cover.

	048-T-24K-ODU	048-T-36K-ODU	048-T-48K-ODU	048-T-60K-ODU
Power Supply	208 V - 230 V / 60 Hz / 1P	208 V - 230 V / 60 Hz / 1P	203 V - 230 V / 60 Hz / 1P	208 V - 230 V / 60 Hz / 1P
Min. Circuit Ampacity	16 A	22 A	35 A	35 A
Breaker Size	25 A	35 A	60 A	60 A

High Voltage Disconnect Switch

Install an independent disconnect switch at the outdoor unit. Field provided flexible electrical conduit must be used for high voltage wiring.

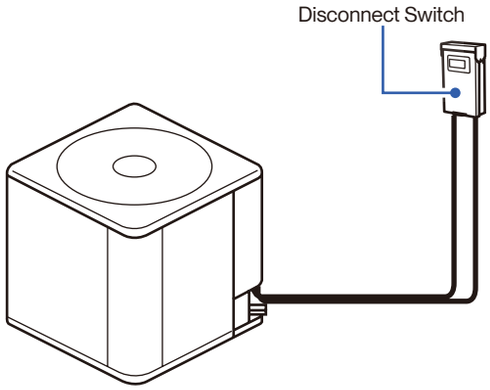

High Voltage Grounding

The outdoor compressor must be grounded to prevent

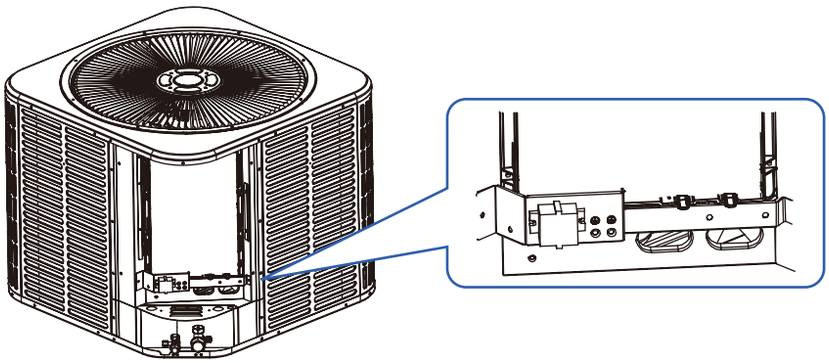

Installation Info

Wiring Reference

Wiring Material Ampacity	AWG
4	22
7	20
10	18
13	16
18	14
25	12
30	10
40	8
55	6
70	4

The ampacity shown apply to appliance wiring materials with insulation rated not less than 194°F / 90°C.

Supply circuit power wiring must be 167°F / 75°C minimum copper conductors only.

Installation

Installation Info

Circuit Diagram

048-T series ODU

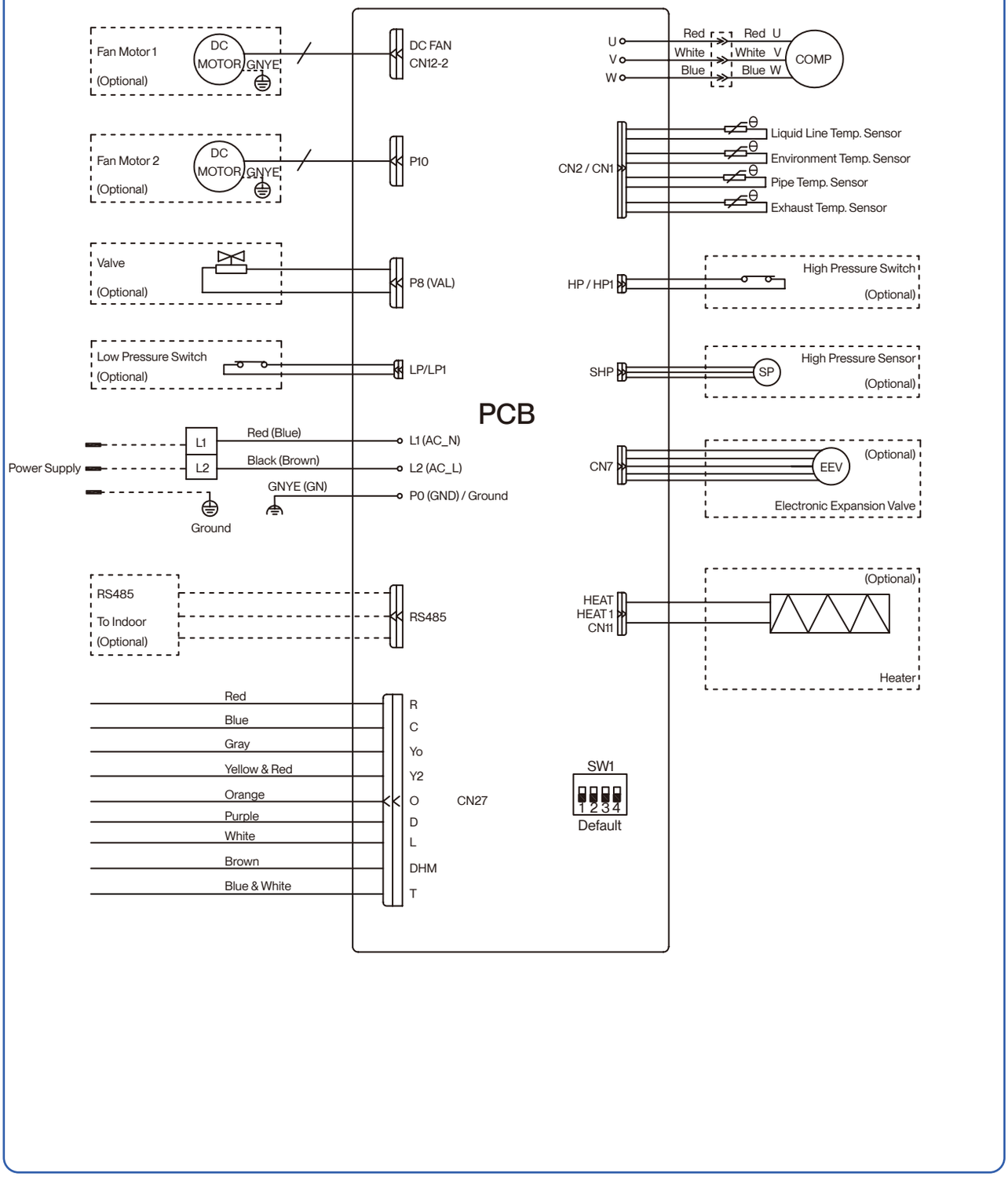

Installation Info

Test Run and Start Up

After the complete installation, including the indoor air handler and thermostat, test run the system and take sure it performs and works properly without water leak or abnormal noise.

1. Set the thermostat to OFF.
2. Turn ON the disconnect switch to apply power to the system.
3. Wait an hour before turning on the unit if the outdoor embient temperature is <59°F.
4. Set the thermostat to ON.

- Attempt to use the air conditioner under the temperature beyond the specified range may cause the air conditioner protection device to start and prevent the system from operating normally. Therefore, test run and use the air conditioner in the following temperature conditions:

	Indoor Temperature	Outdoor Temperature
Cool / Dehumidify Mode	63°F - 90°F / 17°C - 32°C	5°F - 125°F / -15°C - 52°C
Heat Mode	32°F - 86°F / 0°C - 30°C	-20°F - 27°F / -20°C - 27°C

When restarting the air conditionier after shutting down, or switching between heat and cool mode during operation, the air conditioner protection device will triggered. The compressor will resume normal operation after 3 minutes.

When using heating mode, the indoor air handler may take 2 - 5 minutes for preheating before the air conditioner will start heating and blows warm air.
During heating mode, if the outdoor unit is frosted, the air conditioner will enable the automatic defrosting cycle to improve the heating effect. During defrosting, the indoor and outdoor fans stop running. The air conditioner will resume heating automatically after defrosting is finsihed.

System Info

Default Display

LED on main control board can display the operating status of the outdoor unit.

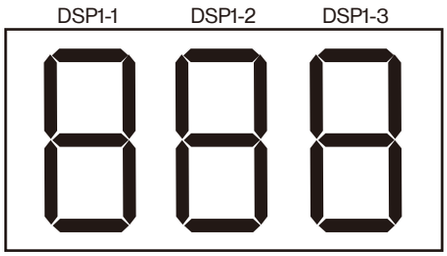

DSP1-1, DSP1-2: Normally blank, but it will display codes accordingly if there is damaged sensor and command response. See the below table for details.
DSP1-3: If displays outdoor unit's operation mode.

DSP1-1, DSP1-2 Code

Error Code	Description	Error Code	Description
E0	Indoor and outdoor communication failure	EH	Outdoor air intake sensor failure
E1	Indoor environment temperature sensor failure	EP	Outdoor compressor shell top failure
E2	Indoor coil temperature sensor failure	EU	Outdoor voltage sensor failure
E3	Outdoor coil temperature sensor failure	EJ	Outdoor middle coil temperature sensor failure
E4	System abnormalities (low refrigerant)	En	Outdoor air pipe temperature sensor failure
E5	Model Configuration errors	Ey	Outdoor liquid pipe temperature sensor failure
E6	Indoor PG / DC fan failure	P0	IPM module protection
E7	Outdoor environment temperature sensor failure	P1	Over and under voltage protection
E8	Outdoor exhaust temperature sensor failure	P2	Overcurrent protection
E9	Outdoor IPM module failure / compressor drive failure	P3	Other protections
EA	Outdoor current sensor failure	P4	Outdoor exhaust temperature too high protection
Eb	Main control board and display screen communication error	P5	Refrigeration anti-freezing protection
EC	Outdoor module communication failure	P6	Refrigeration anti-overheating protection
EE	Outdoor EEPROM failure	P7	Heating anti-overheating protection
EF	Outdoor DC fan failure	P8	Outdoor temperature too high or too low protection

System Info

DSP1-1, DSP1-2 Code

Error Code	Description
P9	Compressor drive protection (load abnormaility)
PA	Top outlet wind plate communication fault / mode conflict
F0	Red exterior motion sensor failure
F1	Electricity module failure
F2	Exhaust temperature sensor bag failure protection
F3	Outer pipe temperature sensor bag failure protection
F4	Refrigerant circuit abnormal protection
F5	PFC protection
F6	Compressor missing / reverse phase protection
F7	Module temperature protection
F8	Four-way valve reversing abnormal protection
F9	Module temperature sensing circuit failure
FA	Compressor phase current detection failure
Fb	Refrigeration and heating overlaod protection
FC	Reduced frequency power overload protection

Error Code	Description
FE	Reduced / frequency module current (compressor phase current) protection
FF	Reduced / frequency module temperature protection
FH	Reduced / frequency drive protection
FP	Dewdrop protection
FU	Frost protection
FJ	Reduced / frequency exhaust protection
Fn	Reduced / frequency external machine AC current protection
Fy	Reduced / frequency lack of fluorine protection
H1	High pressure switch failure
H2	Low pressure switch failure
H3	High pressure sensor failure
H4	Low pressure sensor failure
Hd	Indoor refrigerant leakage protection

System Info

System Info

DSP1-3 Code

DSPI-3 Code	Description
0	Standby
1	Ready
2	Cooling
3	Heating
4	Oil Return Operation
5	Defrosting Operation
6	Forced Deforsting
7	Forced Cooling Operation
8	Forced Heating Operation
A	Fault
H	Dehumidification Mode Operation

Dip Switches setting

SW1-1 ~ SW1-4

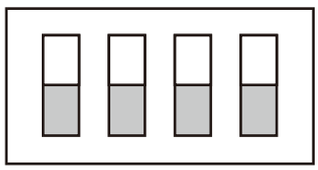

DIP switch should be checked once when the main control is powered on.

SW1 Dip Switch		Description	
No.	Setting item	Status	Content
SW1-1	SIngle Cooling / Heat Pump	ON	AC outdoor unit
		digit	HP outdoor unit
SW1-2	Operating Capacity	ON	Lower capacity
		digit	Normal capacity
SW1-3	Control Mode	ON	485 communication
		digit	24V ON / OFF control
SW1-4	Keep the factory decaults		

System Info

Major Components Function

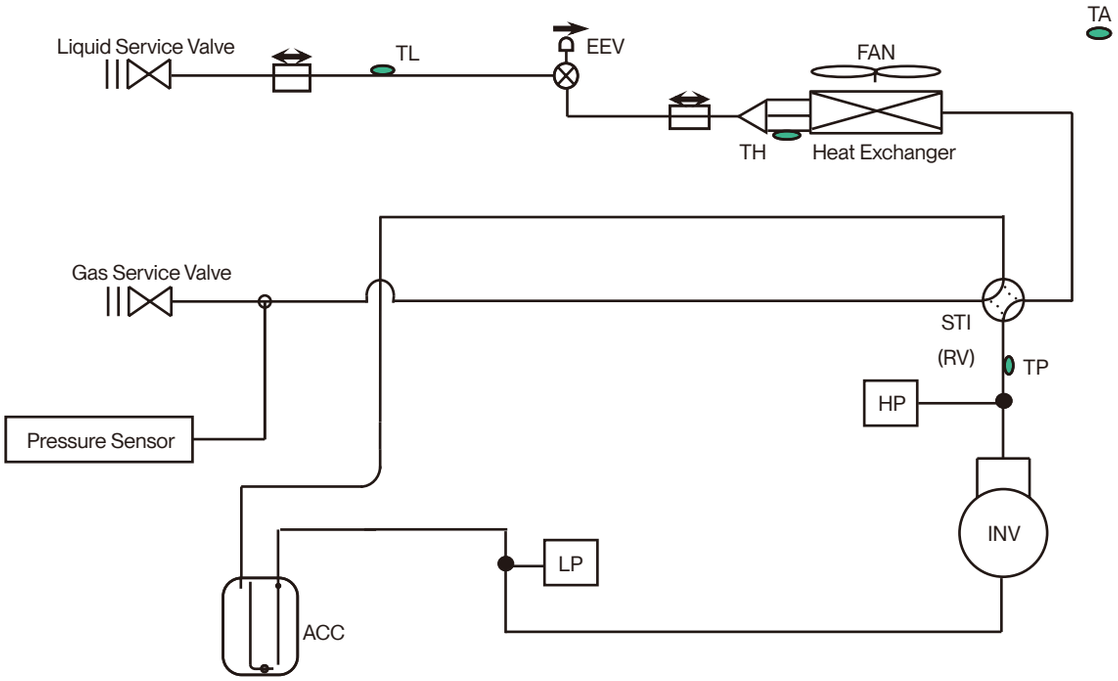

Name	Symbol	Function
Inverter Compressor	INV	Adjust refrigerant flow rate by changing the speed based on objective pressure
DC Motor	FAN	Outputs heat exchanger capacity by adjusting the motor rotational speed based on operating pressure
Electronic Expansion Valve	EEV	1. Fully open in cooling mode and defrost operation 2. Control compressor discharge superheat in heating mode
Reversing Valve	ST1 (RV)	Switches the operation mode between heating and cooling (including defrost control)
Temperature Sensor	TH	Uses to control defrost during heating operation
	TA	Uses to detect outdoor air temperature and control fan speed
	TL	Uses to detect liquid line temperature and calculate sub-cooling
	TD	Uses to detect compressor discharge temperature and calculate discharge superheat
	TF	Uses to detect heatsink temperature of inverter module
High Pressure Switch	HP	Uses to detect high pressure
Low Pressure Switch	LP	Uses to detect low pressure
Accumulator	ACC	To prevent the compressor from ingesting liquid refrigerant

DELLA®

Troubleshooting

CAUTION

- If one of the following conditions occurs, switch off the power disconnect immediately and seek further assistance:
- The operation light continues to flash repidly after the unit has been restarted.
- The unit continually trips fuses or circuit breakers.
- A foreign object or water enters the air conditioner.
- The indoor unit leaks
- Other abnormal situations

When Problem	Possible Cause / Explanation / Solution
Abnormal noises from the outdoor unit	Different operating mode may result in different sounds, It is normal as long as it is not abnormally loud.
Noises from both indoor and outdoor unit	Refrigerant gas flow may make a huming sound, which is normal.
	A hissing sound could be heard when the AC enter defrost mode and stop refrigerant gas from flowing, which is normal.
Unit does not turn ON	The unit has a 3 minutes protection that prevent it from overloading. It cannot be restarted within 3 minutes after it being turned off.
	Cooling and Heating mode: If the operation light and PRE-DEF (pre-heating / defrost) indicators are lit, the outdoor temperature is too cold, the unit will attempt to defrost before operating normaly.
The unit changes from cool mode to fan mode	The unit changes its setting to prevent frost from forming on the unit. Once the temperature increases, the unit will start operating again.
	The set temperature has been reached, at which point the unit turns off the compressor. The unit will resume operating when the temperature fluctuates again.
Both the indoor and outdoor unit emit white mist	When the unit restart in heat mode after defrosting, white mist may be emitted due to moisture generated from the defrosting process.
Dust is emitted from either the indoor or outdoor unit	The unit may accumulate dust during extended periods of non use, which will be emitted when the unit is turned on. This can be mitigated by covering the unit during long periods of inactivity.
The unit emits a bad odor	The unit may abosrb odors from the environment (such as furniture, cooking, cigarettes, etc.) which will be emitted during operations.
	The unit filters have become moldy and should be cleaned or replaced.

Having Problems?

Troubleshooting

When Problem	Possible Cause / Explanation / Solution
The outdoor unit fan does not operate	In normal operation, the fan speed is controlled to optimize product operation.
The unit is not working	Power failure. Restore power supply and restart the unit again.
	The power switch is OFF, Turn the power back ON and restart the unit.
	Breaker has been triggered. Reset the breaker.
	The unit's 3 minutes protection has been triggered. Wait 3 minutes and restart the unit.
Poor cooling performance	Temperature setting may be higher than the ambient room temperature. Lower the temperature setting.
	The heat exchanger on the indoor or outdoor unit is dirty. Clean the affected heat exchanger
	The air filter is dirty. Clean or replace the air filter.
	Doors or windows are open. Close the door or windows while operating the AC
	Excessive heat is generated by sunlight. Close windows and curtains to block sunlight generated heat.
	Low refrigerant due to leak or long-term use. Contact HVAC technician and check on refrigerant level. Re-charge the system if necessary.
Poor heating performance	The outdoor temperature is lower than operational temperature
	Cold air is entering through doors and windows. Close the door or windows while operating the AC
	Low refrigerant due to leak or long-term use. Contact HVAC technician and check on refrigerant level. Re-charge the system if necessary.

Having Problems?

DELLA®

Troubleshooting

When Problem	Possible Cause / Explanation / Solution
The unit starts and stops frequently	There is too much or too little refrigerant in the system. Check and adjust the refrigerant level by a qualified HVAC technician.
	The refrigerant lineset is contaminated by air or water vapor. Recover all the refrigerant from the system, then evacuate and recharge refrigerant.
	System circuit malfunctioned. Check the circuit and replace malfunctioning piece of equipment.
	Malfunction compressor. Repair or replace the compressor
	The voltage is too high or too low, or unstable voltage. A minostatic might need to be installed to regulate the voltage.

Having Problems?



www.dellahome.com
support@dellahome.com
800–863–4143
6:00 a.m. – 4:00 p.m. PST Monday – Friday

© Della All rights reserved.

The design and specifications are subject to change without prior notice for product improvement. Any updates to the manual will be uploaded to the della website.