Daiwa
COMMITTED TO TOTAL QUALITY

# SPINNING REEL **DS 1350/1650**

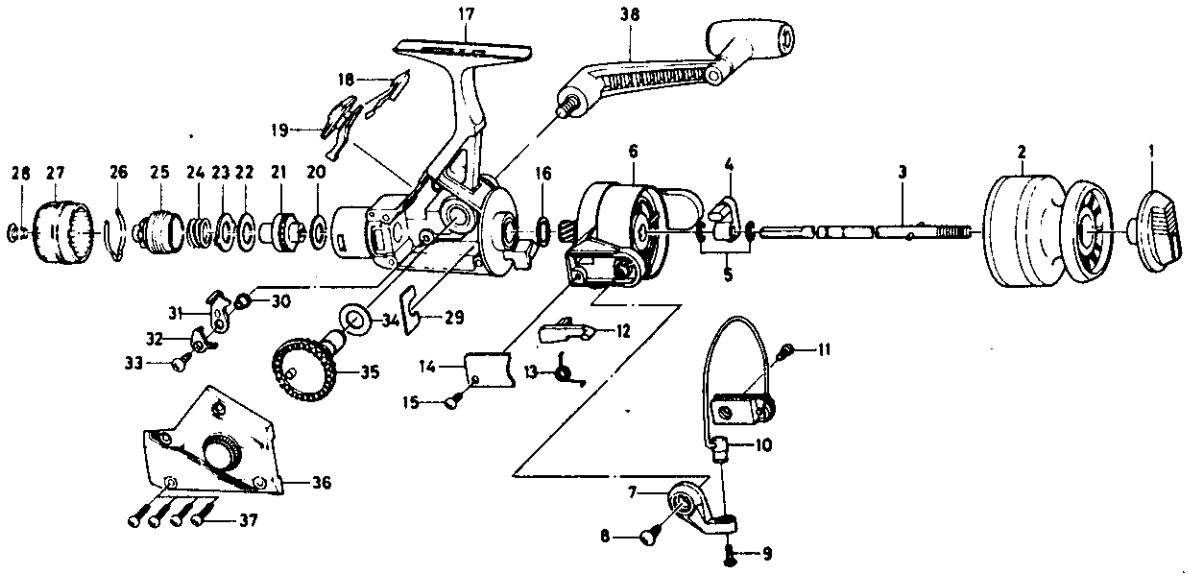


| Key No. | Parts No. | Parts Name |
|---|---|---|
| 1 | L50-3601 | Spool cap. |
| 2 | L50-3301 | Spool assembly |
| 3 | L50-2301 | Main shaft assembly |
| 4 | L50-2201 | Oscillating slider |
| 5 | 320-7601 | Oscillating slider retainer |
| 6 | L50-1101 | Rotor assembly |
| 7 | L50-1301 | Bail arm |
| 8 | L00-2602 | Bail arm screw |
| 9 | B67-9301 | Line roller screw |
| 10 | L50-1601 | Bail |
| 11 | L01-1702 | Bail trip cover screw |
| 12 | L50-1401 | Bail trip lever |
| 13 | B91-6501 | Bail spring |
| 14 | L50-1501 | Bail spring cover |
| 15 | L01-1702 | Bail spring cover screw |
| 16 | 372-8600 | Rotor washer |
| 17 | L50-0601 | Body |
| 18 | B79-0101 | Anti-reverse lever spring |
| 19 | L50-0901 | Anti-reverse lever |
| 20 | B46-9505 | Drag washer A |
| 21 | B76-9801 | Click gear |
| 22 | B78-6601 | Drag washer B |
| 23 | B83-9501 | Eared washer |
| 24 | B91-3701 | Drag coil spring |
| 25 | B77-0003 | Drag screw |
| 26 | B77-0301 | Drag washer spring |
| 27 | L04-4202 | Drag knob |
| 28 | 352-1105 | Drag knob screw |
| 29 | 632-6601 | Pinion retainer |
| 30 | L50-4701 | Anti-reverse pawl collar |
| 31 | B92-0101 | Anti-reverse pawl |
| 32 | B50-1201 | Anti-reverse pawl plate |
| 33 | L00-1801 | Anti-reverse pawl screw |
| 34 | 370-7500 | Drive gear washer |
| 35 | L50-2101 | Drive gear |
| 36 | L50-2501 | Side cover |
| 37 | L50-4601 | Side cover screw |
| 38 | L50-2901 | Handle assembly |

**DS1650 Special Parts**

| | | |
|---|---|---|
| 2 | L50-3901 | Spool assembly |
| 6 | L50-4101 | Rotor assembly |
| 10 | L50-3701 | Bail |
| 12 | L50-4301 | Bail trip lever |
| 36 | L50-2502 | Side cover |