Daiwa
COMMITTED TO TOTAL QUALITY

SPINNING REEL AB1650/2050

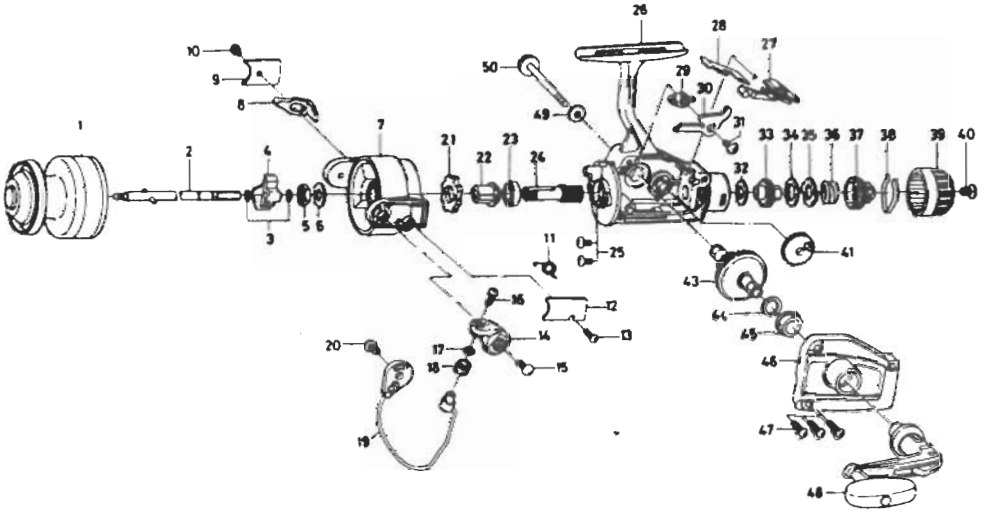

Key No.	Parts No.	Parts Name
1	B78-4605	Spool
2	B77-0801	Main shaft
3	320-8202	Oscillating slider retainer
4	B77-0701	Oscillating slider
5	341-9201	Rotor nut
6	B27-5401	Rotor washer
7	B77-3604	Rotor
8	B77-3701	Bail trip lever
9	B76-9702	Bail trip cover
10	352-0402	Bail trip cover screw
11	B18-7702	Bail spring
12	B77-2201	Bail spring cover
13	352-0402	Bail spring cover screw
14	B76-0201	Bail arm
15	351-6102	Bail arm screw
16	B67-9301	Line roller screw
17	B55-4301	Line roller washer
18	250-3921	Line roller
19	B77-3801	Bail
20	351-6102	Bail trip cam screw
21	B77-2101	Anti-reverse ratchet
22	B93-4001	Pinion spacer
23	637-5701	Ball bearing
24	B82-6501	Pinion gear
25	351-7703	Ball bearing screw
26	C00-0801	Body
27	B84-8901	Anti-reverse lever
28	B79-0101	Anti-reverse cam spring
29	B76-8501	Anti-reverse pawl plate
30	B76-8601	Anti-reverse pawl
31	351-6102	Anti-reverse pawl screw
32	B46-9504	Drag washer A
33	B76-9801	Click gear
34	B78-6601	Drag washer B
35	373-3603	Eared washer
36	B91-3701	Drag coil spring
37	B77-0003	Drag screw
38	B77-0301	Drag washer spring
39	B77-0401	Drag knob
40	352-1105	Drag knob spring screw
41	B74-3701	Oscillating gear
43	B82-2701	Drive gear
44	373-7800	Drive gear washer
45	B12-9002	Bearing
46	C00-0901	Side cover
47	351-5904	Side cover screw
48	B93-4201	Handle
49	372-3501	Handle lock washer
50	B11-5803	Handle lock screw

AB2050 special parts

1	B78-4405	Spool
2	B77-2004	Rotor
8	B76-9601	Bail trip lever
19	B77-2301	Bail
26	C00-0802	Body
46	C00-0902	Side cover
48	B93-4501	Handle