30-Inch Over-the-Range Convection Microwave Hood



PCOR30S — Silver Stainless

Features & Benefits

- 300 CFM ventilation system
- Convection and microwave combination cooking
- Sensor cooking
- Over-the-range installation
- Two-level cooking rack
- Removable filter
- Keep warm

Weights & Dimensions

NET WEIGHT (LBS)	78
SHIPPING WEIGHT (LBS)	84
PRODUCT DIMENSIONS (W X H X D IN INCHES)	29 15/16 x 16 ¼ x 15 ¼
STANDARD CUTOUT REQUIRED (W X H X D IN INCHES)	30 x 15 ½ x 12

Technical Details

ELECTRICAL REQUIREMENTS	120V, 60 Hz, 15A

Warranty

FULL COVERAGE	2 years

Controls

CONTROL TYPE	Membrane-Touch
CLOCK	Yes
CHILD LOCK	Yes

Microwave Oven

MICROWAVE CAPACITY (CU. FT.)	1.1
MICROWAVE POWER	850W
SENSOR COOK	Yes
CONVECTION	Yes
LIGHTING	Halogen

Ventilation

CFM	300
FAN SPEEDS	2
FILTER	Mesh
COOKTOP LIGHTING	Yes
DUCTING	Vent out of recirculation

Model numbers, specifications and prices are subject to change at any time without notice. Visit dacor.com for the most up-to-date information. | Effective April 1, 2026

30-Inch Over-the-Range Convection Microwave Hood

Product Dimensions

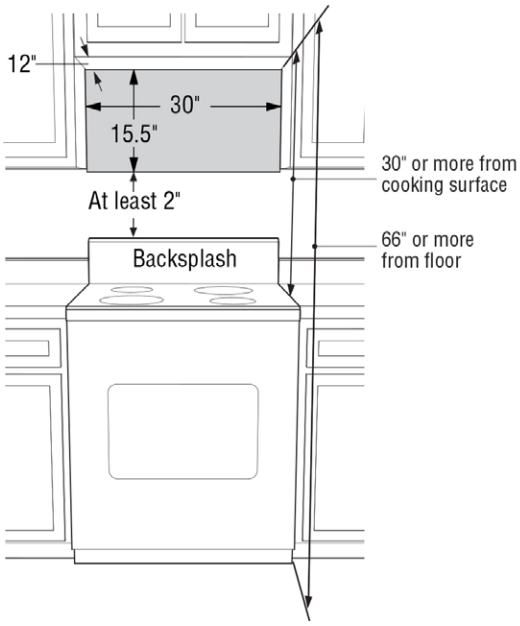

UPPER CABINET DIMENSIONS

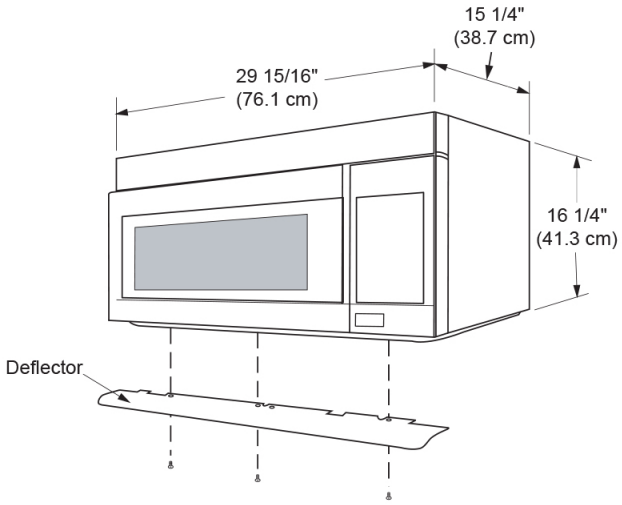

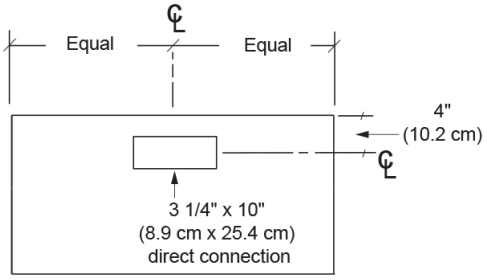

MICROWAVE EXHAUST LOCATION

Model numbers, specifications and prices are subject to change at any time without notice. Visit dacor.com for the most up-to-date information. | Effective April 1, 2026