36-Inch Gas Rangetop



DTT36T960GS/DA — Silver Stainless, natural gas, liquid propane
DTT36T960GM/DA — Graphite Stainless, natural gas, liquid propane

Features & Benefits

- SimmerSear™ brass burners
- Auto Connect to compatible ventilation through Bluetooth
- SmartThings Wi-Fi connectivity
- Illumina™ Knobs
- Perma-Flame™
- LP conversion kit

Weights & Dimensions

NET WEIGHT (LBS)	53
SHIPPING WEIGHT (LBS)	74
PRODUCT DIMENSIONS (W X H X D IN INCHES)	35 ⅞ x 8 x 27 ⅞
CUTOUT REQUIRED (W X H X D IN INCHES)	36 x 7 ¾ x 24

Technical Details

ELECTRICAL REQUIREMENTS	120V, 60 Hz, 20A
AVAILABLE FUEL TYPES	Natural gas, liquid propane
LP CONVERSION KIT (INCLUDED)	Yes

Warranty

FULL COVERAGE	2 years

Accessories (Optional)

ARG36	Griddle for 36” Range & Rangetop

Controls

CONTROL TYPE	Knobs
ILLUMINA™ KNOBS	White
WI-FI + SMARTTHINGS	Yes
BLUETOOTH AUTO CONNECT VENTILATION	Yes
CONTROL SHOWER LIGHTING	Yes

Cooktop

NUMBER OF BURNERS	6 brass
PERMA-FLAME™ (AUTO RE-IGNITION)	Yes
LEFT FRONT (BTU)	22,000
LEFT REAR (BTU)	16,000
CENTER FRONT (BTU)	16,000
CENTER REAR (BTU)	16,000
RIGHT FRONT (BTU)	22,000
RIGHT REAR (BTU)	9,000
BRASS BURNER CAPS	Yes
GRIDDLE	Sold separately
WOK RING	Yes

Model numbers, specifications and prices are subject to change at any time without notice. Visit dacor.com for the most up-to-date information. | Effective April 1, 2026

36-Inch Gas Rangetop

Product Dimensions

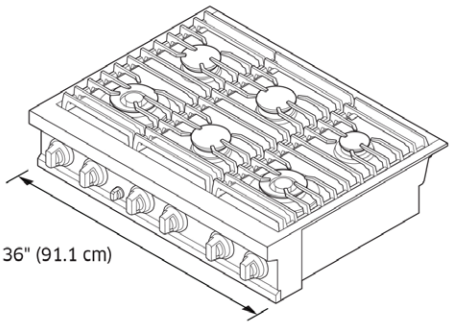

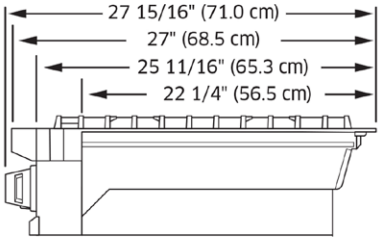

SIDE VIEW

Installation Requirements

A - RANGETOP CUTOUT (IN/CM)	36 / 91.44
B - RANGETOP CUTOUT MINIMUM (IN/CM)	36 / 91.44
B - RANGETOP CUTOUT RECOMMENDED (IN/CM)	42 / 106.7

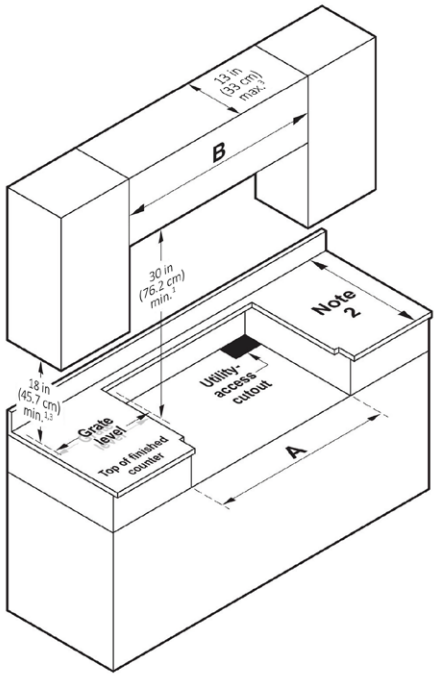

Countertop Cutout Dimensions

A - RANGETOP CUTOUT (IN/CM)	36 / 91.44

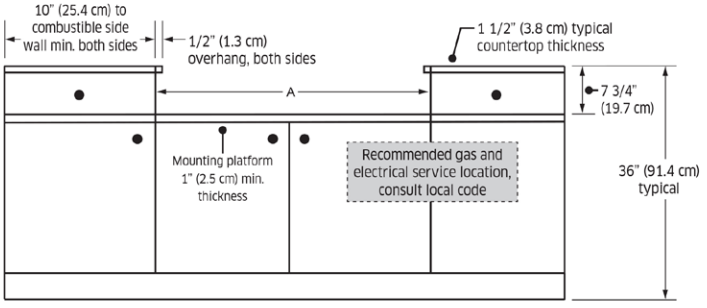

FRONT VIEW

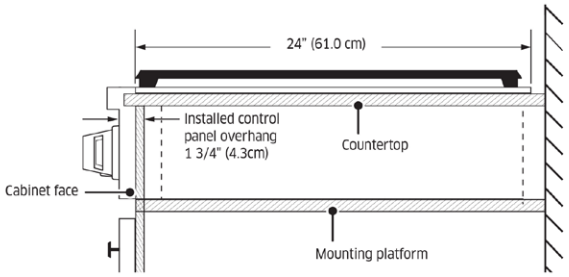

SIDE VIEW

Model numbers, specifications and prices are subject to change at any time without notice. Visit dacor.com for the most up-to-date information. | Effective April 1, 2026