# 30-Inch Induction Cooktop with LCD Touchscreen

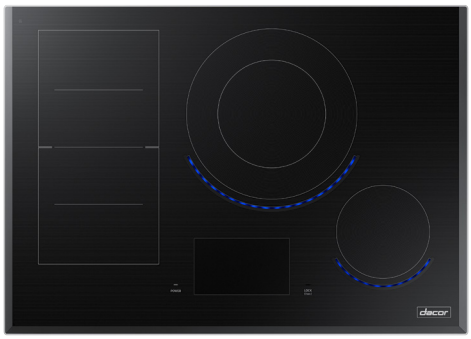

**DTI30M977BB/DA —** Black glass

## Features & Benefits

- Virtual-Flame™
- FlexZone®
- 7-inch LCD control panel with SmartThings Wi-Fi connectivity
- Chef Mode guided cooking
- Auto Connect to compatible ventilation through Bluetooth
- Residual heat indicator
- Ceramic glass

## Weights & Dimensions

| | |
|---|---|
| **NET WEIGHT (LBS)** | 52 |
| **SHIPPING WEIGHT (LBS)** | 59.3 |
| **PRODUCT DIMENSIONS (W X H X D IN INCHES)** | 30 x 3 ⅛ x 21 ¼ |
| **CUTOUT REQUIRED (W X D IN INCHES)** | 28 ½ to 28 ¹¹⁄₁₆ x 19 ⁹⁄₁₆ to 19 ⅝ |

## Technical Details

| | |
|---|---|
| **ELECTRICAL REQUIREMENTS** | 208/240V, 60 Hz, 40A |

## Warranty

| | |
|---|---|
| **FULL COVERAGE** | 2 years |

## Controls

| | |
|---|---|
| **CONTROL TYPE** | 7” LD touchscreen |
| **CHEF MODE GUIDED COOKING** | Yes |
| **WI-FI + SMARTTHINGS** | Yes |
| **BLUETOOTH AUTO CONNECT VENTILATION** | Yes |
| **RESIDUAL HEAT INDICATOR** | Yes, 2 stages |
| **POWER ON/OFF** | Yes |
| **PAUSE** | Yes |
| **KITCHEN TIMER** | Yes |
| **CHILD LOCK** | Yes |

## Cooktop

| | |
|---|---|
| **COOKING ZONES** | 4 |
| **LEFT FRONT (W)** | 1,800 (2,600 boost) |
| **LEFT REAR (W)** | 1,800 (2,600 boost) |
| **CENTER (W)** | 3,600 (4,800 boost) |
| **RIGHT FRONT (W)** | 1,800 (2,600 boost) |
| **POWER LEVELS** | 9 + boost (0.1 increments) |
| **FLEXZONE®** | Yes |
| **MELT & SIMMER** | Yes |
| **VIRTUAL FLAME™** | Yes |
| **AUTO PAN DETECTION** | Yes |

## Battery

| | |
|---|---|
| **BATTERY CHEMISTRY** | Lithium-Ion (Not included in products manufactured after June 2026) |



Model numbers, specifications and prices are subject to change at any time without notice. Visit dacor.com for the most up-to-date information. | Effective August 1, 2026

# 30-Inch Induction Cooktop with LCD Touchscreen

| Product Dimensions | |
|---|---|
| **A - FRAME DEPTH (IN/CM)** | 21 ¼ / 54 |
| **B - FRAME WIDTH (IN/CM)** | 30 / 76.2 |
| **C - CASE DEPTH (IN/CM)** | 19 ½ / 49.5 |
| **D - CASE WIDTH (IN/CM)** | 28 ⅜ / 72 |
| **E - CONDUIT CASE HEIGHT (IN/CM)** | 4 / 10.1 |
| **F - CASE HEIGHT (IN/CM)** | 3 ⅛ / 8 |

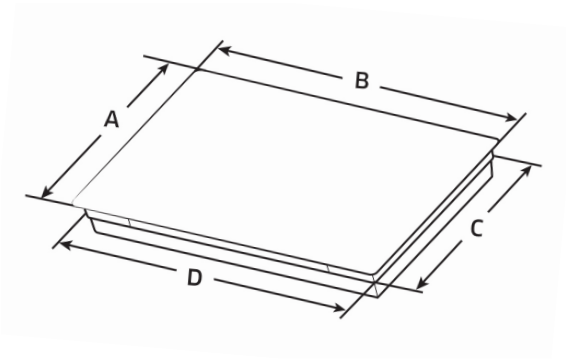


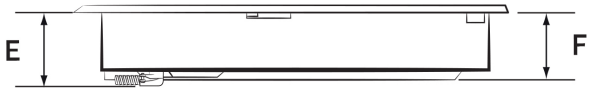


| Installation Cutout Dimensions | |
|---|---|
| **A - (IN/CM)** | 28 ½ - 28 ¹¹⁄₁₆ / 72.4 - 72.8 |
| **B - (IN/CM)** | 19 ⁹⁄₁₆ - 19 ⅝ / 49.7 - 49.9 |
| **C - MIN (IN/CM)** | 1 ⅛ / 2.8 |
| **D - MIN (IN/CM)** | 1 ½ / 3.8 |
| **E - MIN (IN/CM)** | 1 / 2.6 |
| **F - MIN (IN/CM)** | 10 / 25.4 |
| **G - (IN/CM)** | 15 / 38.1 |

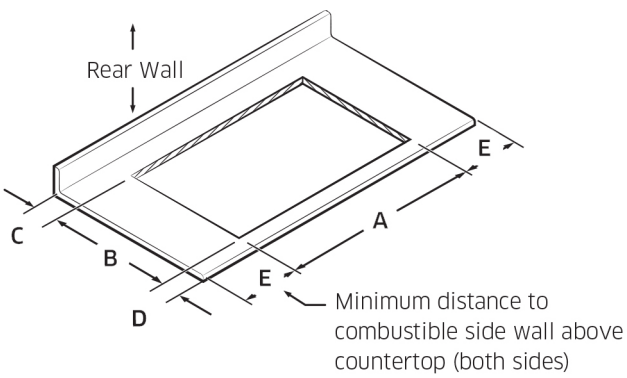


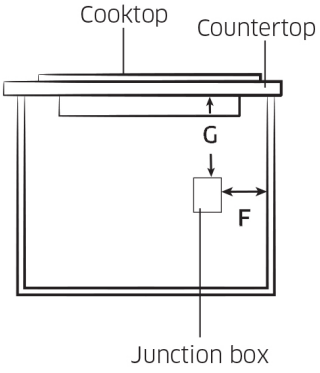




Model numbers, specifications and prices are subject to change at any time without notice. Visit dacor.com for the most up-to-date information. | Effective August 1, 2026