30-Inch Gas Cooktop

CONTEMPORARY

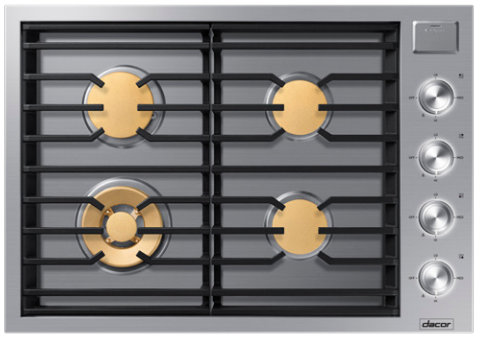

DTG30M954FS/DA — Silver Stainless, natural gas
DTG30M954FM/DA — Graphite Stainless, natural gas

Features & Benefits

- SimmerSear™ brass burners
- Flush installation
- Auto Connect to compatible ventilation through Bluetooth
- SmartThings Wi-Fi connectivity
- Illumina™ Knobs
- Perma-Flame™
- LP conversion kit

Weights & Dimensions

NET WEIGHT (LBS)	71
SHIPPING WEIGHT (LBS)	85
PRODUCT DIMENSIONS (W X H X D IN INCHES)	30 x 6 x 21
CUTOUT REQUIRED (W X D IN INCHES)	28 11/16 x 19 3/4

Technical Details

ELECTRICAL REQUIREMENTS	120V, 60 Hz, 20A
AVAILABLE FUEL TYPES	Natural gas, liquid propane
LP CONVERSION KIT (INCLUDED)	Yes

Warranty

FULL COVERAGE	2 years

Controls

CONTROL TYPE	Knobs
ILLUMINA™ KNOBS	White
WI-FI + SMARTTHINGS	Yes
SABBATH MODE	Yes

Cooktop

NUMBER OF BURNERS	5 brass
PERMA-FLAME™ (AUTO RE-IGNITION)	Yes
LEFT FRONT (BTU)	18,500
LEFT REAR (BTU)	13,000
RIGHT FRONT (BTU)	9,500
RIGHT REAR (BTU)	9,500
BRASS BURNER CAPS	Yes
GRIDDLE	No
WOK RING	No

Model numbers, specifications and prices are subject to change at any time without notice. Visit dacor.com for the most up-to-date information. | Effective April 1, 2026

30-Inch Gas Cooktop

CONTEMPORARY

Product Dimensions	
A - WIDTH (IN/CM)	30 / 76.2
B - CHASSIS WIDTH (IN/CM)	28 ½ / 72.3
C - DEPTH (IN/CM)	21 / 53.3
D - CHASSIS DEPTH (IN/CM)	19 ½ / 49.5

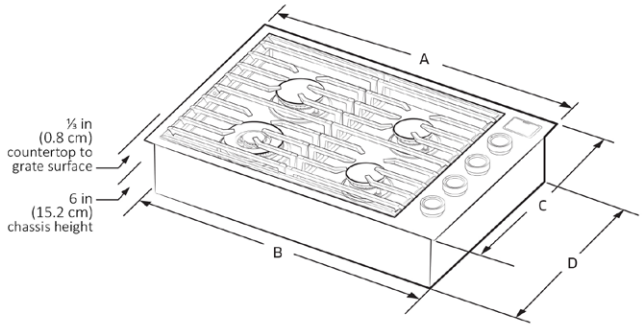

Installation Cutout Dimensions	
E - MIN (IN/CM)	2 ⅞ / 7.2
F - MIN (IN/CM)	19 ¾ / 50.1
G - MIN (IN/CM)	28 ¹¹⁄₁₆ / 72.7
H - MIN (IN/CM)	12 / 30.4

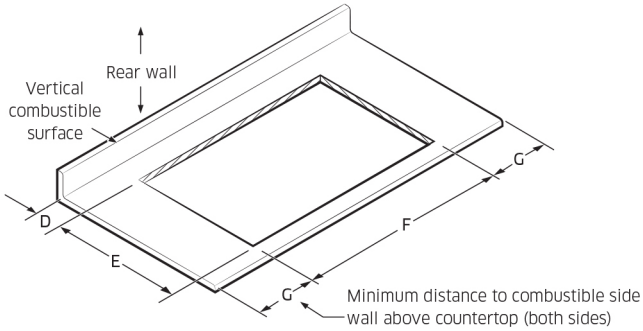

⚠ CAUTION: Cutout dimensions should be strictly observed.

Model numbers, specifications and prices are subject to change at any time without notice. Visit dacor.com for the most up-to-date information. | Effective April 1, 2026