18-Inch Column Freezer



DRZ18980LAP/DA — Panel ready, left hinge
DRZ18980RAP/DA — Panel ready, right hinge

Features & Benefits

- SteelCool™ full stainless steel interior
- LED 3D Lighting
- Hidden Touch Control Panel with SmartThings Wi-Fi connectivity
- Push-to-Open Door
- Internal icemaker
- R600a refrigerant
- Panel ready

Weights & Dimensions

NET WEIGHT (LBS)	289
SHIPPING WEIGHT (LBS)	425
PRODUCT DIMENSIONS (W X H X D IN INCHES)	17 ¾ x 83 ⅜ x 25
FLUSH CUTOUT REQUIRED (W X H X D IN INCHES)	18 x 84 x 25

Technical Details

ELECTRICAL REQUIREMENTS	115V, 60 Hz, 15A

Warranty

FULL COVERAGE	2 years
SEALED SYSTEM, PARTS & LABOR	6 years
SEALED SYSTEM, PARTS ONLY (COMPRESSOR INCLUDED)	10 years

Controls

CONTROL TYPE	Easy reach hidden Glass-Touch
WI-FI + SMARTTHINGS	Yes
SABBATH MODE	Yes

Features

TOTAL CAPACITY (CU. FT.)	9.5
PUSH-TO-OPEN	Yes
WATER DISPENSER	Internal water dispenser
ICEMAKER	Yes
DEODORIZING FILTER	Yes
LED LIGHTING	3D Lighting
INTERIOR MATERIAL	SteelCool™ (Full stainless steel walls)
DIGITAL INVERTER COMPRESSOR	Yes
REFRIGERANT	R600a
FREEZER DRAWERS	2
DOOR BINS	4
SHELVES	4
DOOR ALARM	Yes

Refrigerator

FRESHZONE™ DRAWER	Yes

Freezer

FREEZER CAPACITY (CU. FT.)	9.5
FREEZER TEMPERATURE	-8°F to 5°F
DEDICATED EVAPORATOR & COMPRESSOR SYSTEM	Yes
POWER FREEZE	Yes

Accessories (Optional)

Please see page 14 of Reference Guide for a full list of accessories

RAC18AMLHSR/DA	18” panel kit, Silver Stainless, left
RAC18AMRHSR/DA	18” panel kit, Silver Stainless, right
RAC18AMLHMS/DA	18” panel kit, Graphite Stainless, left
RAC18AMRHMS/DA	18” panel kit, Graphite Stainless, right
RAC00WFAAAA/DA	Water filter for refrigeration
RAC00TCAAAA	Install kit for triple built-in refrigeration
RAC00CPAAAA/DA*	Install kit to pair built-in refrigeration

*2x needed for triple install.

Model numbers, specifications and prices are subject to change at any time without notice. Visit dacor.com for the most up-to-date information. | Effective April 1, 2026

18-Inch Column Freezer

Product Dimensions

A - WIDTH (IN/CM)	17 ¾ / 45
B - WIDTH PANEL (IN/CM)	25 / 63.5
C - HEIGHT (IN/CM)	83 ⅜ / 211.8
D - (IN/CM)	17 ⅝ / 44.7
D1 - WITH PANEL (IN/CM)	18 ⅞ / 47.9
D2 - WITH MODERNIST HANDLE (IN/CM)	20 ¾ / 52.7
E - (IN/CM)	44 ¾ / 113.6
F - (IN/CM)	11 11⁄16 / 29.6
G - (IN/CM)	43 ⅞ / 111.4

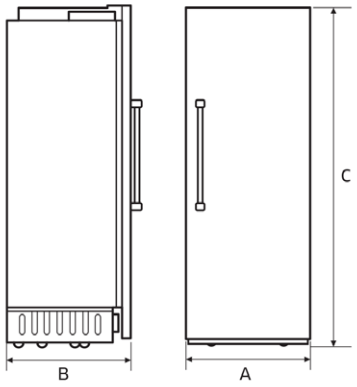

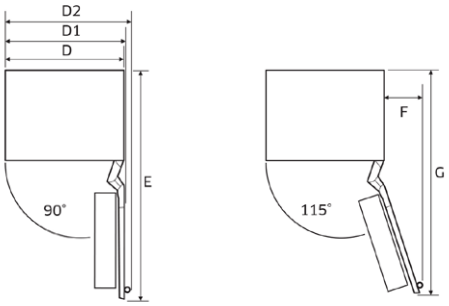

Installation Cutout Dimensions

A - WIDTH (IN/CM)	18 / 45.7
B - DEPTH (IN/CM)	25 / 63.5
C - HEIGHT (IN/CM)	84 / 213.4
D - (IN/CM)	8 / 20.3
E - (IN/CM)	80 / 203.2

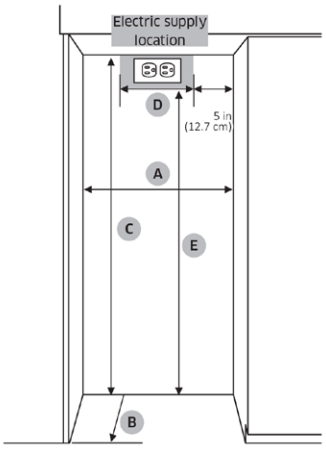

Water Supply Connection Requirements

A - (IN/CM)	3 / 7.6

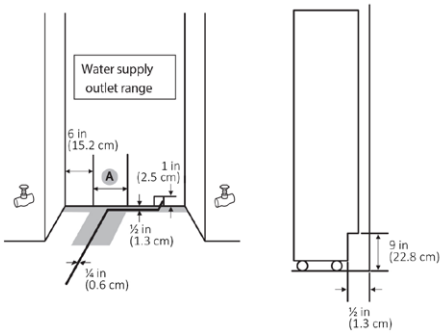

Model numbers, specifications and prices are subject to change at any time without notice. Visit dacor.com for the most up-to-date information. | Effective April 1, 2026