42-Inch Side-by-Side Refrigerator



DRS425300SR/DA — Silver Stainless

Features & Benefits

- Metal Cooling™ stainless steel back interior
- External ice and water dispenser
- Self-closing hinge
- Twin cooling system with two independent evaporators
- Automatic humidity controlled crisper
- SmartThings Wi-Fi control

Weights & Dimensions

NET WEIGHT (LBS)	573.2
SHIPPING WEIGHT (LBS)	641
PRODUCT DIMENSIONS (W X H X D IN INCHES)	42 x 83 ½ x 25 ¹³⁄₁₆
STANDARD CUTOUT REQUIRED (W X H X D IN INCHES)	41 ½ x 84 x 24

Technical Details

ELECTRICAL REQUIREMENTS	115V, 60 Hz, 15A

Warranty

FULL COVERAGE	2 years
SEALED SYSTEM, PARTS & LABOR	6 years
SEALED SYSTEM, PARTS ONLY (COMPRESSOR INCLUDED)	10 years

Controls

CONTROL TYPE	External
WI-FI + SMARTTHINGS	Yes
SABBATH MODE	Yes

Features

TOTAL CAPACITY (CU. FT.)	24
PUSH-TO-OPEN	No
WATER DISPENSER	External water dispenser
ICEMAKER	Standard ice
IQ REMOTE VIEW™ CAMERA	No
LED LIGHTING	Yes
INTERIOR MATERIAL	Metal Cooling™ (Stainless steel back wall)
DIGITAL INVERTER COMPRESSOR	Yes
REFRIGERANT	R600a
CRISPER DRAWERS	3
FREEZER DRAWERS	3
DOOR BINS	4 (refrigerator), 3 (freezer)
SHELVES	4 (refrigerator), 3 (freezer)
DOOR ALARM	Yes

Refrigerator

REFRIGERATOR CAPACITY (CU. FT.)	15.5
REFRIGERATOR TEMPERATURE	34°F to 44°F
POWER COOL	Yes

Freezer

FREEZER CAPACITY (CU. FT.)	8.5
FREEZER TEMPERATURE	-8°F to 5°F
POWER FREEZE	Yes

Accessories (Optional)

RASOOWFAAAA/DA	Water filter for Side-by-Side refrigeration

Model numbers, specifications and prices are subject to change at any time without notice. Visit dacor.com for the most up-to-date information. | Effective April 1, 2026

42-Inch Side-by-Side Refrigerator

Product Dimensions

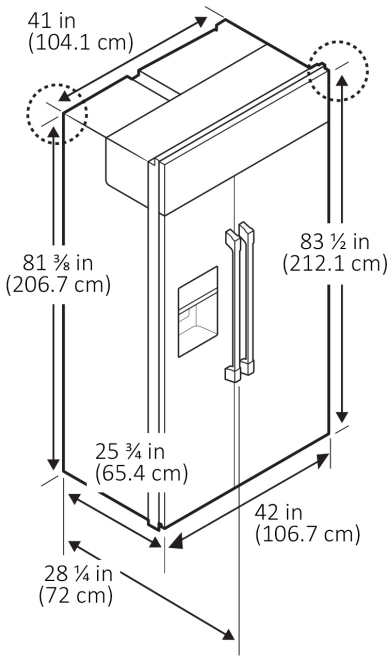

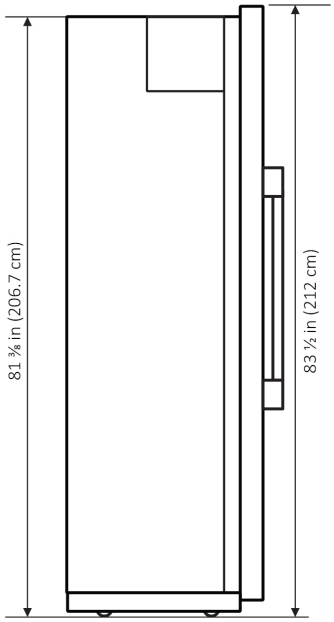

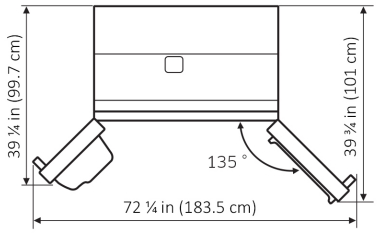

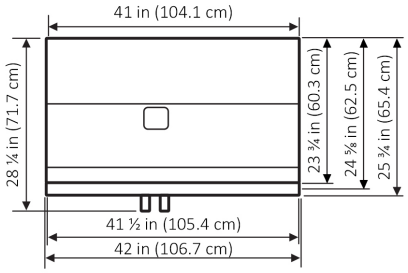

Installation Cutout Dimensions

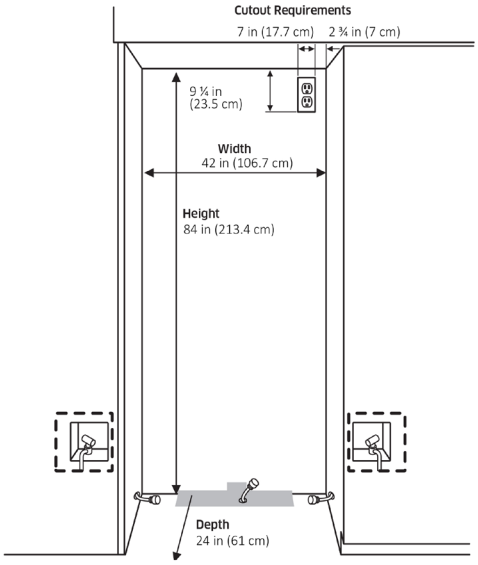

Model numbers, specifications and prices are subject to change at any time without notice. Visit dacor.com for the most up-to-date information. | Effective April 1, 2026