24-Inch Undercounter Beverage Refrigerator



DRR24G7400APDA — Panel ready

Features & Benefits

- Field reversible flush capable hinge
- Panel ready
- Presenter shelf
- Touch control
- SteelCool™ full stainless steel interior
- LED 3D Lighting
- Triple pane UV resistant glass
- R600a refrigerant

Weights & Dimensions

NET WEIGHT (LBS)	136.4
SHIPPING WEIGHT (LBS)	155.1
PRODUCT DIMENSIONS (W X H X D IN INCHES)	23 ¾ x 34 3/16 to 34 ⅜ x 23 ⅝
STANDARD CUTOUT REQUIRED (W X H X D IN INCHES)	24 min. x 34 ¼ to 34 7/16 x 24 min.

Technical Details

ELECTRICAL REQUIREMENTS	115V, 60 Hz, 15A

Warranty

FULL COVERAGE	2 years

Controls

CONTROL TYPE	Touch
WI-FI + SMARTTHINGS	No
SABBATH MODE	Yes

Features

LIGHTING	LED Lighting
GLASS DOOR	Triple pane UV resistant
INTERIOR MATERIAL	SteelCool™ (Full stainless steel walls)
REFRIGERANT	R600a
SHELVES	2 glass shelves, 1 presenter shelf, 1 plastic shelf

Refrigerator

REFRIGERATOR CAPACITY (CU. FT.)	5 (128 cans)
ZONES	1
REFRIGERATOR TEMPERATURE	34°F to 50°F

Accessories (Optional)

RAW24AMAASR/DA	Panel kit, Silver Stainless
RAW24AMAAMS/DA	Panel kit, Graphite Stainless

Model numbers, specifications and prices are subject to change at any time without notice. Visit dacor.com for the most up-to-date information. | Effective April 1, 2026

24-Inch Undercounter Beverage Refrigerator

Product Dimensions

A - (IN/CM)	23 ¾ / 603
B - WITH PANEL (IN/CM)	23 ⅝ / 600
B1 - WITHOUT PANEL (IN/CM)	22 ⅞ / 581
C - (IN/CM)	34 ⅜ - 34 ⅜ / 868 - 873
D - (IN/CM)	23 ¹³⁄₁₆ / 605
D1 - (IN/CM)	24 ⅝ / 617.5
D2 - (IN/CM)	28 / 712.5
E - (IN/CM)	50 ¹³⁄₁₆ / 1290.5

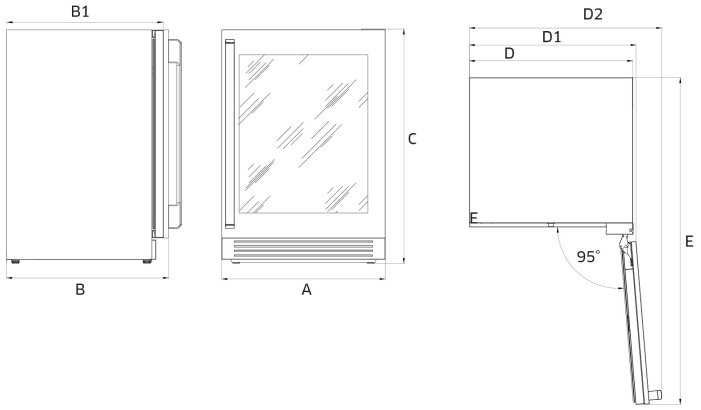

Custom Panel Dimensions

W1 - (IN/CM)	23 ¾ / 603
W2 - (IN/CM)	2 ⅜ / 60
W3 - (IN/CM)	18 ¹¹⁄₁₆ / 477
H1 - (IN/CM)	30 ⅜ / 771
H2 - (IN/CM)	3 ⅜ / 86
H3 - (IN/CM)	23 ⁹⁄₁₆ / 598
H4 - (IN/CM)	3 ⅜ / 86
PANEL THICKNESS - (IN/CM)	¾ / 19
CUSTOM PANEL THICKNESS - (IN/CM)	²³⁄₃₂ - ²⁵⁄₃₂ / 18 - 20
MAX WEIGHT - (LBS/KG)	22 / 10

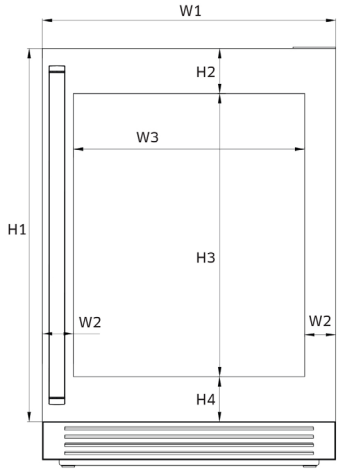

Cutout and Utility Location for Built-In Purposes

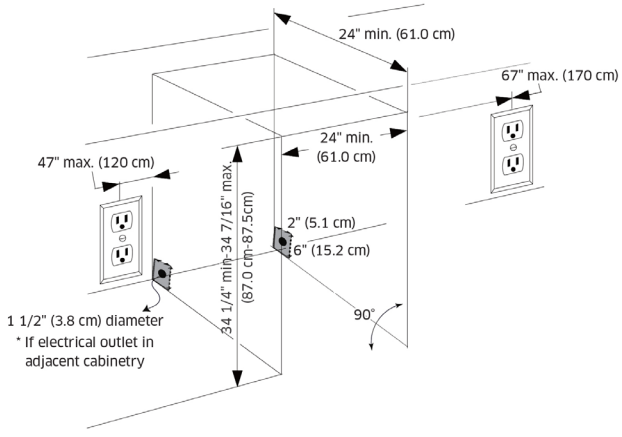

Model numbers, specifications and prices are subject to change at any time without notice. Visit dacor.com for the most up-to-date information. | Effective April 1, 2026