48-Inch Built-In French Door Refrigerator



DRF485300AP/DA — Panel ready

Features & Benefits

- Metal Cooling™ stainless steel back interior
- LED 3D Lighting
- FreshZone+™ and FreshZone™ compartment
- Icemaker with crescent ice
- Triple Cooling system with 3 evaporators
- Hidden Touch Control Panel with SmartThings Wi-Fi control
- Internal water dispenser
- R600a refrigerant
- Panel ready

Weights & Dimensions

NET WEIGHT (LBS)	647.7
SHIPPING WEIGHT (LBS)	707.7
PRODUCT DIMENSIONS (W X H X D IN INCHES)	47 ¼ x 83 ⅜ x 23 ¹³⁄₁₆
STANDARD CUTOUT REQUIRED (W X H X D IN INCHES)	47 ½ x 84 x 24
FLUSH CUTOUT REQUIRED (W X H X D IN INCHES)	48 x 84 x 25

Technical Details

ELECTRICAL REQUIREMENTS	115V, 60 Hz, 10A

Warranty

FULL COVERAGE	2 years
SEALED SYSTEM, PARTS & LABOR	6 years
SEALED SYSTEM, PARTS ONLY (COMPRESSOR INCLUDED)	10 years

Controls

CONTROL TYPE	Easy reach hidden Glass-Touch
WI-FI + SMARTTHINGS	Yes
SABBATH MODE	Yes

Features

TOTAL CAPACITY (CU. FT.)	27.7
FRESHZONE+™ CONVERTIBLE COMPARTMENT	Yes
FRESHZONE+™ CONVERTIBLE COMPARTMENT TEMPERATURE	-8°F to 33°F
PUSH-TO-OPEN	No
WATER DISPENSER	Internal water dispenser
ICEMAKER	Standard ice
IQ REMOTE VIEW™ CAMERA	No
DEODORIZING FILTER	Yes
LED LIGHTING	3D Lighting
INTERIOR MATERIAL	Metal Cooling™ (Stainless steel back wall)
DIGITAL INVERTER COMPRESSOR	Yes
REFRIGERANT	R600a
CRISPER DRAWERS	2
FREEZER DRAWERS	4
DOOR BINS	6
SHELVES	1 x full width, 4 x adjustable
DOOR ALARM	Yes

Refrigerator

REFRIGERATOR CAPACITY (CU. FT.)	19.7
REFRIGERATOR TEMPERATURE	34°F to 44°F
FRESHZONE™ DRAWER TEMPERATURE	29°F, 33°F, 37°F
POWER COOL	Yes
FRESHZONE™ DRAWER	Yes

Freezer

FREEZER CAPACITY (CU. FT.)	8
FREEZER TEMPERATURE	-8°F to 5°F
POWER FREEZE	Yes

Accessories (Optional)

RAT48AMAASR/DA	48" 4-Door Built-In French Door Refrigerator panel kit, Silver Stainless
RAT48AMAAMS/DA	48" 4-Door Built-In French Door Refrigerator panel kit, Graphite Stainless
RAC48TKBBSR/DA	48" kick plate, Silver Stainless
RAC48TKBBMS/DA	48" kick plate, Graphite Stainless
RAC00WFAAAA/DA	Water filter for refrigeration
RAC00DFAAAA/DA	Air filter for refrigeration DRF/DRR/DRW, set of 6

Model numbers, specifications and prices are subject to change at any time without notice. Visit dacor.com for the most up-to-date information. | Effective April 1, 2026

48-Inch Built-In French Door Refrigerator

Product Dimensions

A - WIDTH (IN/CM)	47 ¾ / 121.3
B - DEPTH (IN/CM)	25 / 63.5
C - HEIGHT (IN/CM)	83 ⅜ / 211.8
D - (IN/CM)	47 ¼ / 120
D1 - WITH PANEL (IN/CM)	49 11⁄16 / 126.2
D2 - WITH HANDLE (IN/CM)	55 7⁄32 / 140.3
E - (IN/CM)	51 ½ / 130.8
F - (IN/CM)	23 45⁄64 / 60.2
G - (IN/CM)	50 25⁄64 / 128

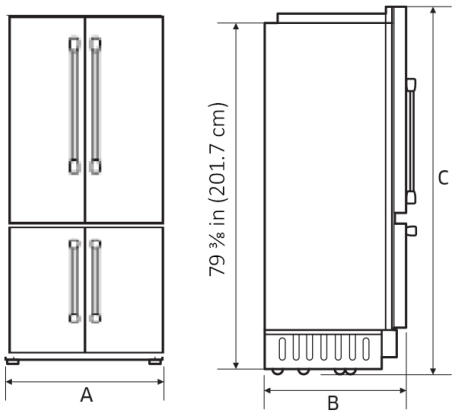

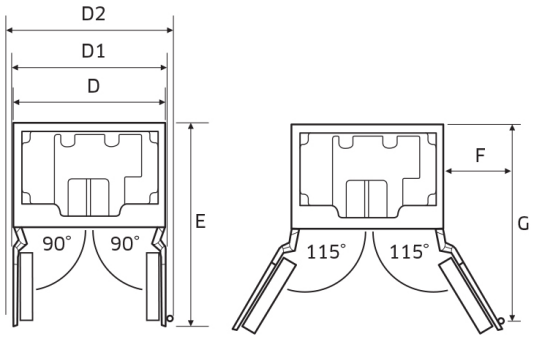

Installation Cutout Dimensions

A - WIDTH (IN/CM)	48 / 122
B - DEPTH (IN/CM)	25 / 63.5
C - HEIGHT (IN/CM)	84 / 213.4
D - (IN/CM)	28 / 71.1
E - (IN/CM)	80 / 203.2

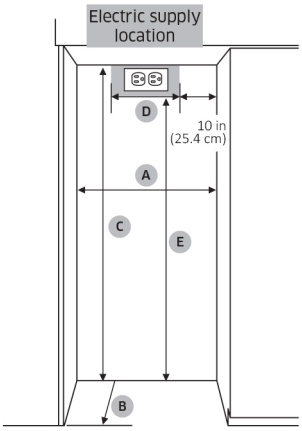

Model numbers, specifications and prices are subject to change at any time without notice. Visit dacor.com for the most up-to-date information. | Effective April 1, 2026