42-Inch Built-In French Door Refrigerator with SteelCool™



DRF427500AP/DA — Panel ready

Features & Benefits

- SteelCool™ full stainless steel interior
- iQ Remote View™ cameras
- LED 3D Lighting
- FreshZone+™ and FreshZone™ compartment
- Dual Icemaker with Cocktail Ice™
- Triple Cooling system with 3 evaporators
- Hidden Touch Control Panel with SmartThings Wi-Fi control
- Internal water dispenser
- R600a refrigerant
- Panel ready

Weights & Dimensions

NET WEIGHT (LBS)	655
SHIPPING WEIGHT (LBS)	709
PRODUCT DIMENSIONS (W X H X D IN INCHES)	41 ¾ x 83 ⅜ x 23 15⁄16
STANDARD CUTOUT REQUIRED (W X H X D IN INCHES)	41 ½ x 84 x 24
FLUSH CUTOUT REQUIRED (W X H X D IN INCHES)	42 x 84 x 25

Technical Details

ELECTRICAL REQUIREMENTS	115V, 60 Hz, 15A

Warranty

FULL COVERAGE	2 years
SEALED SYSTEM, PARTS & LABOR	6 years
SEALED SYSTEM, PARTS ONLY (COMPRESSOR INCLUDED)	10 years

Controls

CONTROL TYPE	Easy reach hidden Glass-Touch
WI-FI + SMARTTHINGS	Yes
SABBATH MODE	Yes

Features

TOTAL CAPACITY (CU. FT.)	23.6
FRESHZONE+™ CONVERTIBLE COMPARTMENT	Yes
FRESHZONE+™ CONVERTIBLE COMPARTMENT TEMPERATURE	-8°F to 33°F
PUSH-TO-OPEN	No
WATER DISPENSER	Internal water dispenser
ICEMAKER	Dual Icemaker with Cocktail Ice™
IQ REMOTE VIEW™ CAMERA	Yes
DEODORIZING FILTER	Yes
LED LIGHTING	3D Lighting
INTERIOR MATERIAL	SteelCool™ (Full stainless steel walls)
DIGITAL INVERTER COMPRESSOR	Yes
REFRIGERANT	R600a
CRISPER DRAWERS	2
FREEZER DRAWERS	4
DOOR BINS	7
SHELVES	1 x full width, 4 x adjustable
DOOR ALARM	Yes

Refrigerator

REFRIGERATOR CAPACITY (CU. FT.)	16.9
REFRIGERATOR TEMPERATURE	34°F to 44°F
FRESHZONE™ DRAWER TEMPERATURE	33°F, 37°F
POWER COOL	Yes
FRESHZONE™ DRAWER	Yes

Freezer

FREEZER CAPACITY (CU. FT.)	6.7
FREEZER TEMPERATURE	-8°F to 5°F
POWER FREEZE	Yes

Accessories (Optional)

Please see page 15 of Reference Guide for a full list of accessories

RAT42AMAASR/DA	42" 4-Door Built-In French Door Refrigerator panel kit, Silver Stainless
RAT42AMAAMS/DA	42" 4-Door Built-In French Door Refrigerator panel kit, Graphite Stainless
RAC0OWFAAAA/DA	Water filter for refrigeration
RAC0ODFAAAA/DA	Air filter for refrigeration DRF/DRR/DRW, set of 6

Model numbers, specifications and prices are subject to change at any time without notice. Visit dacor.com for the most up-to-date information. | Effective April 1, 2026

42-Inch Built-In French Door Refrigerator with SteelCool™

Product Dimensions	
A - WIDTH (IN/CM)	41 ¾ / 106
B - WITH PANEL (IN/CM)	24 11⁄16 / 62.7
B1 - WITHOUT PANEL (IN/CM)	23 13⁄16 / 60.5
C - HEIGHT (IN/CM)	83 ⅜ / 21.18
D - (IN/CM)	41 ¼ / 104.8
D1 - (IN/CM)	43 11⁄16 / 111
D2 - (IN/CM)	47 7⁄16 / 120.5
E - (IN/CM)	48 ½ / 123.2
F - (IN/CM)	22 7⁄16 / 57
G - (IN/CM)	47 ⅝ / 121

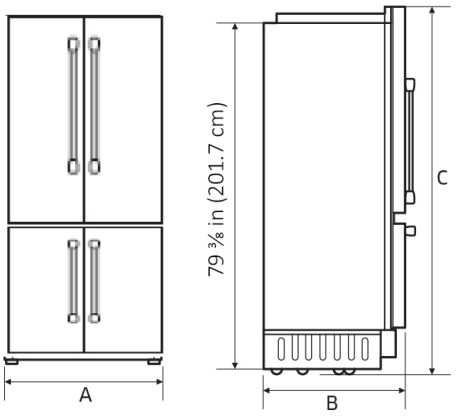

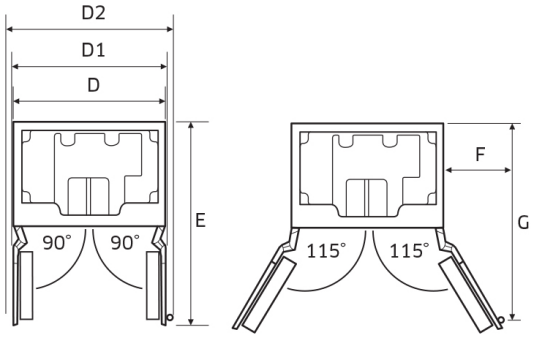

Installation Cutout Dimensions	
A - WIDTH (IN/CM)	42 / 106.7
B - DEPTH (IN/CM)	25 / 63.5
C - HEIGHT (IN/CM)	84 / 213.4
D - (IN/CM)	22 / 55.9
E - (IN/CM)	80 / 203.2

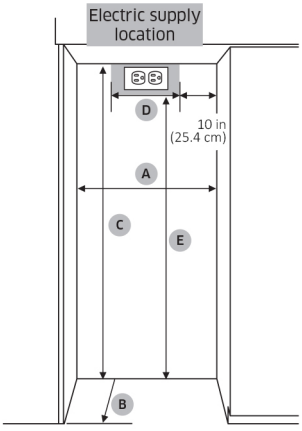

Model numbers, specifications and prices are subject to change at any time without notice. Visit dacor.com for the most up-to-date information. | Effective April 1, 2026