36-Inch Counter Depth French Door Refrigerator with Reveal™ Door



DRF36C500SR/DA — Silver Stainless
DRF36C500MT/DA — Graphite Stainless

Features & Benefits

- Reveal™ Door
- Dual Icemaker with IceBites™ and cubed ice
- Beverage center with interior water pitcher and water dispenser
- Metal Cooling™ stainless steel back interior
- Digital display control panel with SmartThings Wi-Fi control
- Dedicated egg basket
- LED Lighting
- R600a refrigerant

Weights & Dimensions

NET WEIGHT (LBS)	295
SHIPPING WEIGHT (LBS)	315
PRODUCT DIMENSIONS (W X H X D IN INCHES)	35 ⅞ x 70 x 28 ½

Technical Details

ELECTRICAL REQUIREMENTS	115 - 120V, 60 Hz, 10A

Warranty

FULL COVERAGE	2 years
SEALED SYSTEM, PARTS & LABOR	6 years
SEALED SYSTEM, PARTS ONLY (COMPRESSOR INCLUDED)	10 years

Controls

CONTROL TYPE	Digital interior
WI-FI + SMARTTHINGS	Yes
SABBATH MODE	Yes

Features

TOTAL CAPACITY (CU. FT.)	22.8
PUSH-TO-OPEN	No
WATER DISPENSER	Internal left door beverage center
ICEMAKER	Cubed ice and IceBites™
IQ REMOTE VIEW™ CAMERA	No
LED LIGHTING	Yes
INTERIOR MATERIAL	Metal Cooling™ (Stainless steel back wall)
DIGITAL INVERTER COMPRESSOR	Yes
REFRIGERANT	R600a
CRISPER DRAWERS	2
FREEZER DRAWERS	2
DOOR BINS	6 (refrigerator), 6 (freezer)
SHELVES	4 (refrigerator), 4 (freezer)
DOOR ALARM	Yes

Refrigerator

REFRIGERATOR CAPACITY (CU. FT.)	13.7
REFRIGERATOR TEMPERATURE	34°F to 44°F
POWER COOL	Yes

Freezer

FREEZER CAPACITY (CU. FT.)	9.1
FREEZER TEMPERATURE	-8°F to 5°F
POWER FREEZE	Yes

Accessories (Optional)

RACOOWFAAAA/DA	Water filter for refrigeration

Model numbers, specifications and prices are subject to change at any time without notice. Visit dacor.com for the most up-to-date information. | Effective April 1, 2026

36-Inch Counter Depth French Door Refrigerator with Reveal™ Door

Product Dimensions	
A - DEPTH (IN/CM)	28 ½ / 72.3
B - WIDTH (IN/CM)	35 ⅞ / 91.1
C - HEIGHT (IN/CM)	68 ⅞ / 175
D - OVERALL HEIGHT (IN/CM)	70 / 177.8

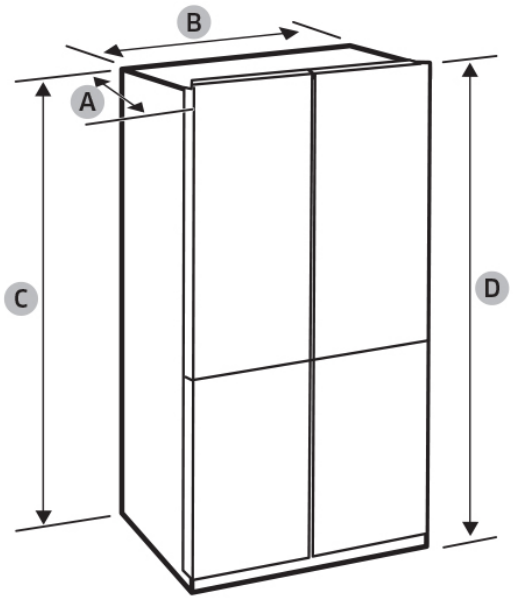

Installation Cutout Dimensions	
01 - (IN/CM)	More than 2 / 5 recommended
02	125°
03 - (IN/CM)	58 / 147.3
04 - (IN/CM)	11 ⅛ / 28.2
05 - (IN/CM)	24 / 61
06 - (IN/CM)	1 ⅞ / 4.7
07 - (IN/CM)	43 / 109.2

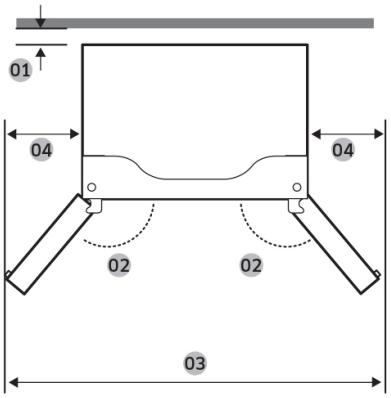

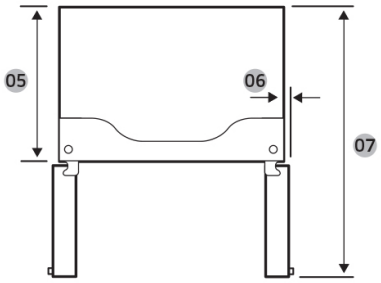

Model numbers, specifications and prices are subject to change at any time without notice. Visit dacor.com for the most up-to-date information. | Effective April 1, 2026