36-Inch Built-In French Door Refrigerator



DRF365300AP/DA — Panel ready

Features & Benefits

- Metal Cooling™ stainless steel back interior
- LED 3D Lighting
- FreshZone™ drawer
- Icemaker with crescent ice
- Hidden Touch Control Panel with SmartThings Wi-Fi control
- Internal water dispenser
- R600a refrigerant
- Panel ready

Weights & Dimensions

NET WEIGHT (LBS)	518
SHIPPING WEIGHT (LBS)	601
PRODUCT DIMENSIONS (W X H X D IN INCHES)	35 ¾ x 83 ⅜ x 25
FLUSH CUTOUT REQUIRED (W X H X D IN INCHES)	36 x 84 x 25

Technical Details

ELECTRICAL REQUIREMENTS	115V, 60 Hz, 15A

Warranty

FULL COVERAGE	2 years
SEALED SYSTEM, PARTS & LABOR	6 years
SEALED SYSTEM, PARTS ONLY (COMPRESSOR INCLUDED)	10 years

Controls

CONTROL TYPE	Easy reach hidden Glass-Touch
WI-FI + SMARTTHINGS	Yes
SABBATH MODE	Yes

Features

TOTAL CAPACITY (CU. FT.)	21.3
PUSH-TO-OPEN	No
WATER DISPENSER	Internal water dispenser
ICEMAKER	Standard ice
IQ REMOTE VIEW™ CAMERA	No
DEODORIZING FILTER	Yes
LED LIGHTING	3D Lighting
INTERIOR MATERIAL	Metal Cooling™ (Stainless steel back wall)
DIGITAL INVERTER COMPRESSOR	Yes
REFRIGERANT	R600a
CRISPER DRAWERS	2
FREEZER DRAWERS	2
DOOR BINS	6
SHELVES	2 x full width, 2 x adjustable
DOOR ALARM	Yes

Refrigerator

REFRIGERATOR CAPACITY (CU. FT.)	14.5
REFRIGERATOR TEMPERATURE	34°F to 44°F
FRESHZONE™ DRAWER TEMPERATURE	29°F, 33°F, 37°F
POWER COOL	Yes
FRESHZONE™ DRAWER	Yes

Freezer

FREEZER CAPACITY (CU. FT.)	6.8
FREEZER TEMPERATURE	-8°F to 5°F
POWER FREEZE	Yes

Accessories (Optional)

Please see page 16 of Reference Guide for a full list of accessories

RAF36AMAASR/DA	36" 3-Door Built-In French Door Refrigerator panel kit, Silver Stainless
RAF36AMAAMS/DA	36" 3-Door Built-In French Door Refrigerator panel kit, Graphite Stainless
RAC00WFAAAA/DA	Water filter for refrigeration
RAC00DFAAAA/DA	Air filter for refrigeration DRF/DRR/DRW, set of 6

Model numbers, specifications and prices are subject to change at any time without notice. Visit dacor.com for the most up-to-date information. | Effective April 1, 2026

36-Inch Built-In French Door Refrigerator

Product Dimensions

A - WIDTH (IN/CM)	35 ¾ / 90.8
B - WITH PANEL (IN/CM)	25 / 63.5
C - HEIGHT (IN/CM)	83 ⅜ / 211.8
D - (IN/CM)	35 ⅝ / 90.5
D1 - WITH PANEL (IN/CM)	38 1/16 / 96.7
D2 - WITH MODERNIST HANDLE (IN/CM)	43 19/32 / 110.7
E - (IN/CM)	44 ⅞ / 114
F - (IN/CM)	20 9/16 / 52.2
G - (IN/CM)	44 / 111.8

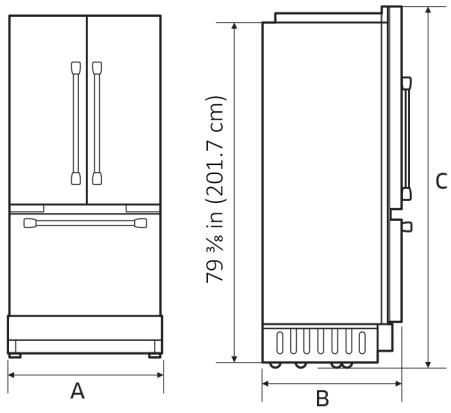

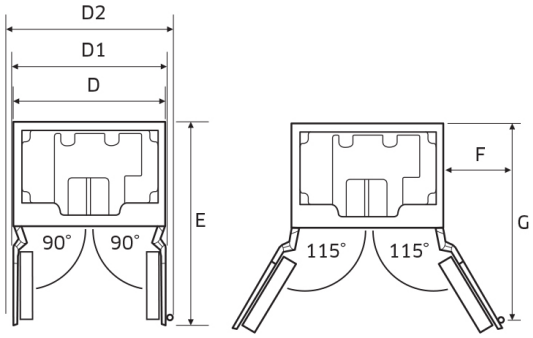

Installation Cutout Dimensions

A - WIDTH (IN/CM)	36 / 91.4
B - DEPTH (IN/CM)	25 / 63.5
C - HEIGHT (IN/CM)	84 / 213.4
D - (IN/CM)	26 / 66
E - (IN/CM)	80 / 203.2

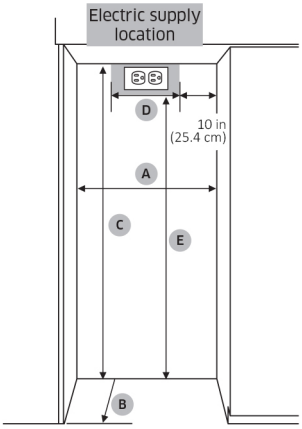

Model numbers, specifications and prices are subject to change at any time without notice. Visit dacor.com for the most up-to-date information. | Effective April 1, 2026