48-Inch Gas Range

TRANSITIONAL



DOP48T960GS/DA — Silver Stainless, natural gas, liquid propane

Features & Benefits

- Dual Four-Part Pure Convection system
- SimmerSear™ brass burners
- Motorized 7-inch LCD control panel with SmartThings Wi-Fi connectivity
- Ultra wide 15-inch grates
- Auto Connect to compatible ventilation through Bluetooth
- Air sous vide
- Digital temperature probe
- Self-clean oven
- Perma-Flame™
- SoftShut™ hinges
- LP conversion kit
- Voice commands through Bixby/Alexa/Google

Weights & Dimensions

NET WEIGHT (LBS)	578
SHIPPING WEIGHT (LBS)	660
PRODUCT DIMENSIONS (W X H X D IN INCHES)	47 ⅞ x 36 x 28 ¾

Technical Details

ELECTRICAL REQUIREMENTS	120V, 60 Hz, 12.5A
AVAILABLE FUEL TYPES	Natural gas, liquid propane
LP CONVERSION KIT (INCLUDED)	Yes

Warranty

FULL COVERAGE	2 years

Accessories (Optional)

ARG48	Griddle for 48” Range & Rangetop

Controls

CONTROL TYPE	7” motorized LCD touchscreen & knobs
CHEF MODE GUIDED COOKING	Yes
ILLUMINA™ KNOBS	White
WI-FI + SMARTTHINGS	Yes
BLUETOOTH AUTO CONNECT VENTILATION	Yes
CONTROL SHOWER LIGHTING	Yes
CLOCK	Yes
DELAY START	Yes
KITCHEN TIMER	Yes
CHILD LOCK	Yes
SABBATH MODE	Yes

Oven

OVEN CAPACITY (CU. FT.)	5.4 (large oven), 2.3 (small oven)
CONVECTION	Dual Four-Part Pure
BAKE BURNER	25,000 BTU (large oven), 14,000 BTU (small oven)
BROIL BURNER	18,000 BTU (large oven), 9,000 BTU (small oven)
CONVECTION ELEMENT	900W
TEMPERATURE PROBE	Yes
LIGHTING	Halogen
SELF-CLEAN	Yes
SOFTSHUT™	Yes

Cooktop

NUMBER OF BURNERS	6
PERMA-FLAME™ (AUTO RE-IGNITION)	Yes
LEFT FRONT (BTU)	22,000
LEFT REAR (BTU)	16,000
CENTER FRONT (BTU)	16,000
CENTER REAR (BTU)	16,000
RIGHT FRONT (BTU)	22,000
RIGHT REAR (BTU)	9,000
BRASS BURNER CAPS	Yes
GRIDDLE	Sold separately
WOK RING	Yes

Battery

BATTERY CHEMISTRY	Lithium-Ion (Not included in products manufactured after June 2026)

Model numbers, specifications and prices are subject to change at any time without notice. Visit dacor.com for the most up-to-date information. | Effective August 1, 2026

48-Inch Gas Range

TRANSITIONAL

Product Dimensions

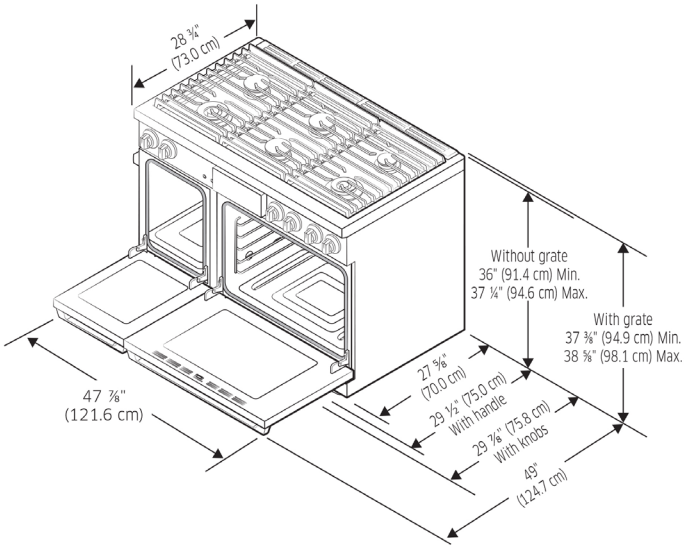

Installation Requirements

A - ELECTRICAL OUTLET (IN / CM)	9 ⅞ / 25.1 (W) x 6 ⅞ / 17.5 (H)
B - GAS PIPING (IN / CM)	17 ¹⁵⁄₁₆ / 45.5 (W) x 5 ⅜ / 13.8 (H)

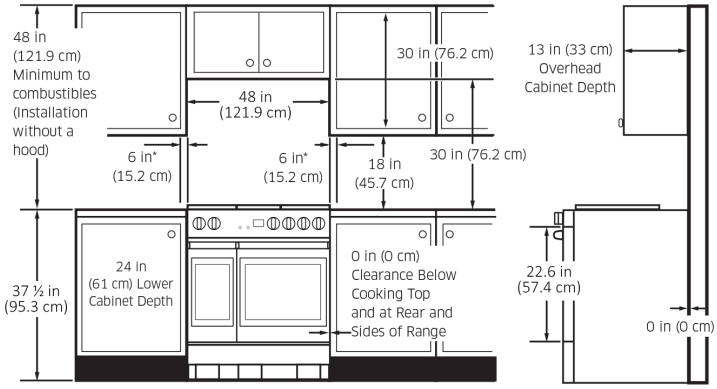

*Side clearance above cooking surface to any objects, i.e., wall.

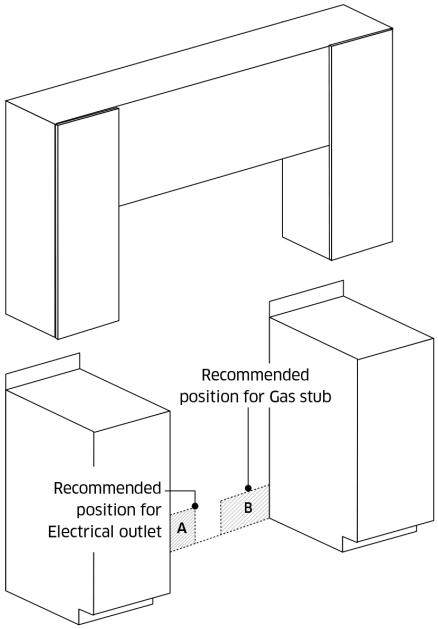

Model numbers, specifications and prices are subject to change at any time without notice. Visit dacor.com for the most up-to-date information. | Effective August 1, 2026