48-Inch Dual-Fuel Steam Range

CONTEMPORARY



DOP48C86DLS/DA — Silver Stainless, natural gas, liquid propane
DOP48C86DLM/DA — Graphite Stainless, natural gas, liquid propane

Features & Benefits

- Real Steam™ oven
- Dual Four-Part Pure Convection system
- SimmerSear™ brass burners
- BrightVue™ LED & Halogen lighting
- Motorized 7-inch LCD control panel with SmartThings Wi-Fi connectivity
- Ultra-wide 15-inch grates
- Chef Mode guided cooking
- Auto Connect to compatible ventilation through Bluetooth
- External steam generator
- Digital temperature probe
- Self-clean oven
- SoftShut™ hinges

Weights & Dimensions

NET WEIGHT (LBS)	564
SHIPPING WEIGHT (LBS)	650
PRODUCT DIMENSIONS (W X H X D IN INCHES)	47 ⅞ x 36 ⅛ x 27 ½

Technical Details

ELECTRICAL REQUIREMENTS	240V, 60 Hz, 50A
AVAILABLE FUEL TYPES	Natural gas, liquid propane
LP CONVERSION KIT (INCLUDED)	Yes

Warranty

FULL COVERAGE	2 years

Accessories (Optional)

ARG48	Griddle for 48" Pro-Range & Rangetop

Battery

BATTERY CHEMISTRY	Lithium-Ion (Not included in products manufactured after June 2026)

Controls

CONTROL TYPE	7" motorized LCD touchscreen & knobs
CHEF MODE GUIDED COOKING	Yes
ILLUMINA™ KNOBS	White
WI-FI + SMARTTHINGS	Yes
BLUETOOTH AUTO CONNECT VENTILATION	Yes
CONTROL SHOWER LIGHTING	Yes
CLOCK	Yes
DELAY START	Yes
KITCHEN TIMER	Yes
CHILD LOCK	Yes
SABBATH MODE	Yes

Oven

OVEN CAPACITY (CU. FT.)	4.8 (large oven) / 1.8 (small oven)
CONVECTION	Dual Four-Part Pure
STEAM	Real Steam™
BAKE ELEMENT	3,000W - 8 pass (large oven), 1,000W (small oven)
BROIL ELEMENT	4,400W - 10 pass (large oven), 2,400W (small oven)
CONVECTION ELEMENT	2 x 1,300W (large oven), 2,000W (small oven)
INSTANTHEAT™ (NO PREHEAT)	Yes
TEMPERATURE PROBE	Yes
LIGHTING	BrightVue™ - LED & Halogen
SELF-CLEAN	Self-clean, GreenClean™
SOFTSHUT™	Yes

Cooktop

NUMBER OF BURNERS	6
PERMA-FLAME™ (AUTO RE-IGNITION)	Yes
LEFT FRONT (BTU)	22,000
LEFT REAR (BTU)	16,000
CENTER FRONT (BTU)	16,000
CENTER REAR (BTU)	16,000
RIGHT FRONT (BTU)	22,000
RIGHT REAR (BTU)	9,000
BRASS BURNER CAPS	Yes
GRIDDLE	Sold separately
WOK RING	Yes

Model numbers, specifications and prices are subject to change at any time without notice. Visit dacor.com for the most up-to-date information. | Effective August 1, 2026

48-Inch Dual-Fuel Steam Range

CONTEMPORARY

Product Dimensions

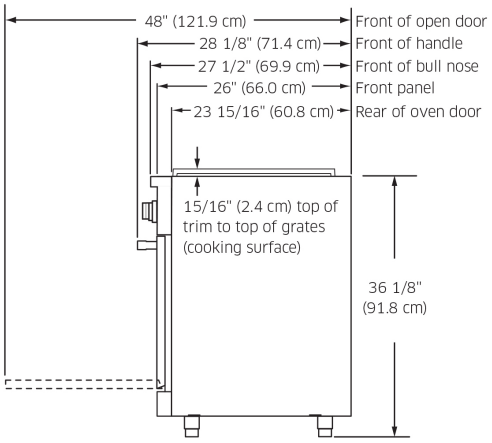

SIDE VIEW

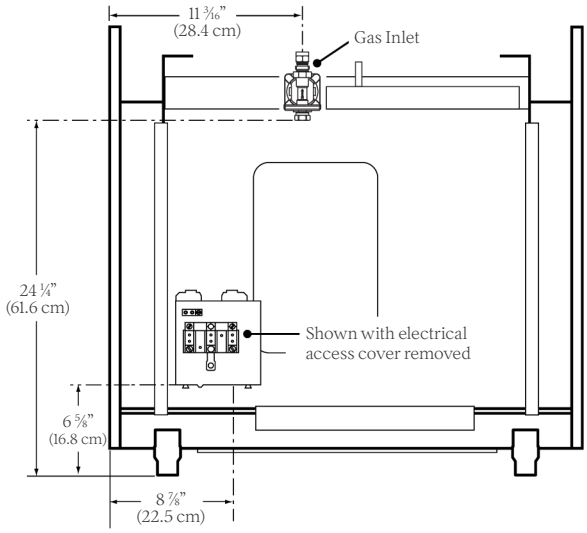

REAR VIEW

Cutout Dimensions

A - IN / CM	min. 52 / 137.2 - max. 48 / 121.9
B - IN / CM	min. 48 / 121.9 - max. 48 ⅛ / 122.2
C - IN / CM	43 ½ / 110.5

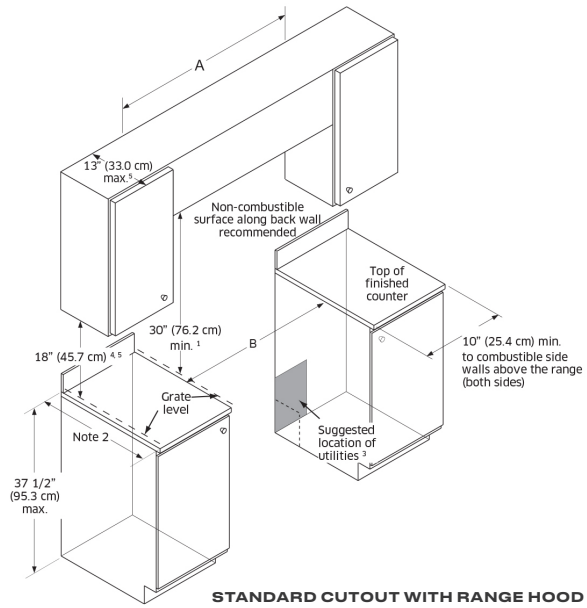

STANDARD CUTOUT WITH RANGE HOOD

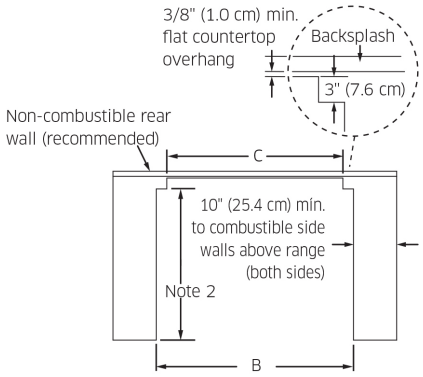

CUTOUT WITH OPTIONAL DOWNDRAFT VENT (TOP VIEW)

[1] Vertical from range grate level to combustible overhead surface; if installing an overhead vent hood, also check hood specifications for minimum required clearances.
[2] Cabinet/countertop depth is at discretion of customer but cabinet face MUST NOT protrude further than rear of front panel, see product dimensions.
[3] Consult local code for exact location requirements.
[4] Vertical from grate level to combustible surface.
[5] This specification does not apply for cabinets more than a horizontal distance of 10"/25.4 cm from the edge of the range.

Model numbers, specifications and prices are subject to change at any time without notice. Visit dacor.com for the most up-to-date information. | Effective August 1, 2026