36-Inch Gas Range

TRANSITIONAL



DOP36T86GLS/DA — Silver Stainless, natural gas

Features & Benefits

- Dual Three-Part Convection system
- SimmerSear™ brass burners
- Halogen lighting
- OLED control panel with SmartThings Wi-Fi connectivity
- Perma-Flame™
- Auto Connect to compatible ventilation through Bluetooth
- Digital temperature probe
- Self-clean oven
- SoftShut™ hinges
- LP conversion kit

Weights & Dimensions

NET WEIGHT (LBS)	437
SHIPPING WEIGHT (LBS)	513
PRODUCT DIMENSIONS (W X H X D IN INCHES)	35 ⅞ x 36 x 28 ¾

Technical Details

ELECTRICAL REQUIREMENTS	120V, 60 Hz, 10A
AVAILABLE FUEL TYPES	Natural gas, liquid propane
LP CONVERSION KIT (INCLUDED)	Yes

Warranty

FULL COVERAGE	2 years

Accessories (Optional)

ARG36	Griddle for 36” Range & Rangetop

Controls

CONTROL TYPE	2.25” PMOLED touchscreen & knobs
CHEF MODE GUIDED COOKING	No
ILLUMINA™ KNOBS	White
WI-FI + SMARTTHINGS	Yes
BLUETOOTH AUTO CONNECT VENTILATION	Yes
CONTROL SHOWER LIGHTING	Yes
CLOCK	Yes
DELAY START	Yes
KITCHEN TIMER	Yes
CHILD LOCK	Yes
SABBATH MODE	Yes

Oven

OVEN CAPACITY (CU. FT.)	5.9
CONVECTION	Dual Three-Part
BAKE BURNER	25,000 BTU
BROIL BURNER	18,000 BTU
TEMPERATURE PROBE	Yes
LIGHTING	Halogen
SELF-CLEAN	Self-clean
SOFTSHUT™	Yes

Cooktop

NUMBER OF BURNERS	6
PERMA-FLAME™ (AUTO RE-IGNITION)	Yes
LEFT FRONT (BTU)	22,000
LEFT REAR (BTU)	16,000
CENTER FRONT (BTU)	16,000
CENTER REAR (BTU)	16,000
RIGHT FRONT (BTU)	22,000
RIGHT REAR (BTU)	16,000
BRASS BURNER CAPS	Yes
GRIDDLE	Sold separately
WOK RING	Yes

Battery

BATTERY CHEMISTRY	Lithium-ion (Li-ion)

Model numbers, specifications and prices are subject to change at any time without notice. Visit dacor.com for the most up-to-date information. | Effective July 1, 2026

36-Inch Gas Range

TRANSITIONAL

Product Dimensions

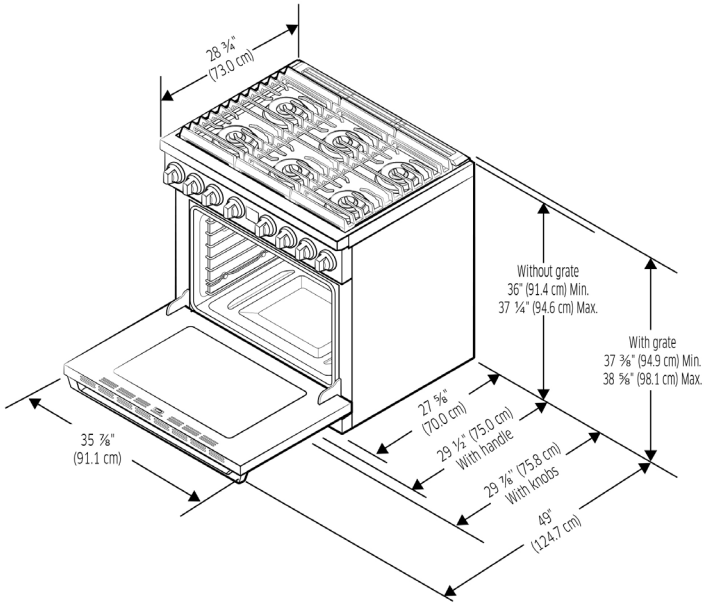

Installation Cutout Dimensions

A - ELECTRICAL OUTLET (IN / CM)	9 ⅞ / 25.1 (W) x 6 ⅞ / 17.5 (H)
B - GAS PIPING (IN / CM)	7 ⅜ / 18.6 (W) x 5 ⅜ / 13.8 (H)

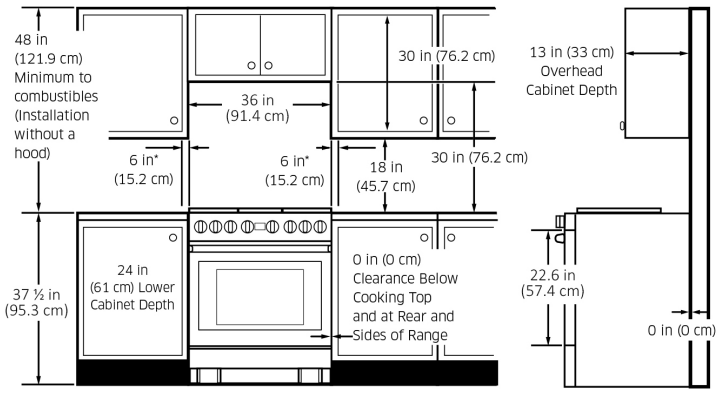

*Side clearance above cooking surface to any objects, i.e., wall.

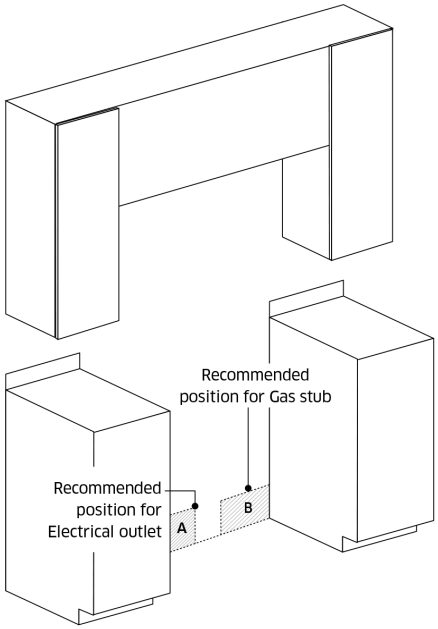

Model numbers, specifications and prices are subject to change at any time without notice. Visit dacor.com for the most up-to-date information. | Effective July 1, 2026