36-Inch Gas Range

CONTEMPORARY



DOP36M96GLS/DA — Silver Stainless, natural gas, liquid propane
DOP36M96GLM/DA — Graphite Stainless, natural gas, liquid propane

Features & Benefits

- Double ceramic infrared broiler
- Precise control with 5 °F increments
- Dual Three-Part Convection system
- SimmerSear™ brass burners
- BrightVue™ LED & Halogen lighting
- Motorized 7-inch LCD control panel with SmartThings Wi-Fi connectivity
- Chef Mode guided cooking
- Auto Connect to compatible ventilation through Bluetooth
- Digital temperature probe
- Self-clean oven
- SoftShut™ hinges
- LP conversion kit

Weights & Dimensions

NET WEIGHT (LBS)	469
SHIPPING WEIGHT (LBS)	444
PRODUCT DIMENSIONS (W X H X D IN INCHES)	35 ⅞ x 36 ½ x 29

Technical Details

ELECTRICAL REQUIREMENTS	120V, 60 Hz, 20A
AVAILABLE FUEL TYPES	Natural gas, liquid propane
LP CONVERSION KIT (INCLUDED)	Yes

Warranty

FULL COVERAGE	2 years

Accessories (Optional)

ARG36	Griddle for 36” Pro-Range & Rangetop

Controls

CONTROL TYPE	7” motorized LCD touchscreen & knobs
CHEF MODE GUIDED COOKING	Yes
ILLUMINA™ KNOBS	White
WI-FI + SMARTTHINGS	Yes
BLUETOOTH AUTO CONNECT VENTILATION	Yes
CONTROL SHOWER LIGHTING	Yes
CLOCK	Yes
DELAY START	Yes
KITCHEN TIMER	Yes
CHILD LOCK	Yes
SABBATH MODE	Yes

Oven

OVEN CAPACITY (CU. FT.)	5.4
CONVECTION	Dual Three-Part
BAKE BURNER	25,000 BTU
BROIL BURNER	18,000 BTU
TEMPERATURE PROBE	Yes
LIGHTING	BrightVue™ - LED & Halogen
SELF-CLEAN	Self-clean, GreenClean™
SOFTSHUT™	Yes

Cooktop

NUMBER OF BURNERS	6
PERMA-FLAME™ (AUTO RE-IGNITION)	Yes
LEFT FRONT (BTU)	22,000
LEFT REAR (BTU)	18,000
CENTER FRONT (BTU)	18,000
CENTER REAR (BTU)	18,000
RIGHT FRONT (BTU)	22,000
RIGHT REAR (BTU)	18,000
BRASS BURNER CAPS	Yes
GRIDDLE	Sold separately
WOK RING	Yes

Battery

BATTERY CHEMISTRY	Lithium-Ion (Not included in products manufactured after June 2026)

Model numbers, specifications and prices are subject to change at any time without notice. Visit dacor.com for the most up-to-date information. | Effective August 1, 2026

36-Inch Gas Range

CONTEMPORARY

Product Dimensions

WIDTH (IN / CM)	35 ⅞ / 91.1

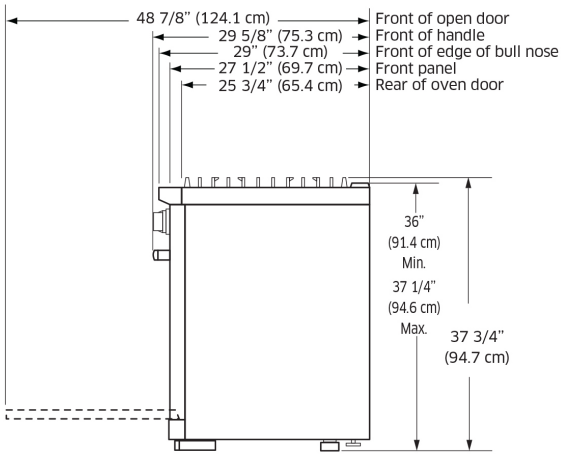

DOP36M96 Width: 35 ⅞"/ 91.1 cm

Installation Cutout Dimensions

A - WIDTH (IN / CM)	min. 36 / 91.4 42 / 106.7 recommended
B - WIDTH (IN / CM)	36 / 91.4

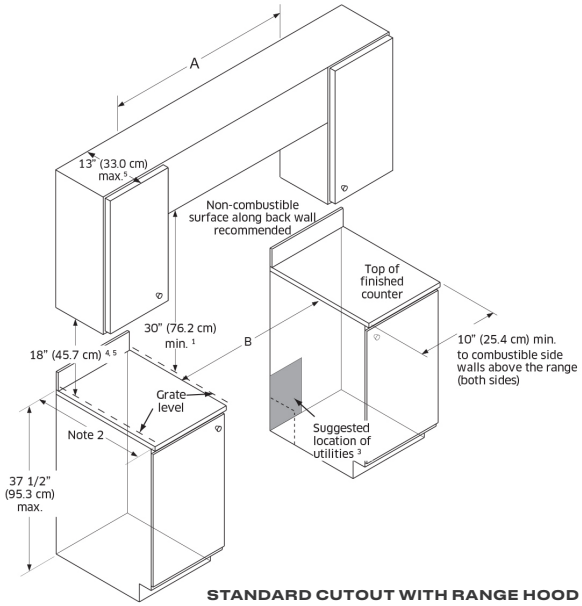

STANDARD CUTOUT WITH RANGE HOOD

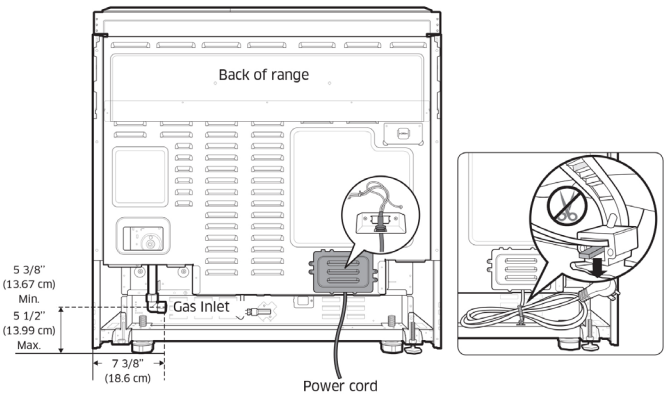

[1] Vertical from range grate level to combustible overhead surface; if installing an overhead vent hood, also check hood specifications for minimum required clearances.
[2] Cabinet/countertop depth is at discretion of customer but cabinet face MUST NOT protrude further than rear of front panel, see product dimensions.
[3] Consult local code for exact location requirements.
[4] Vertical from grate level to combustible surface.
[5] This specification does not apply for cabinets more than a horizontal distance of 10"/25.4 cm from the edge of the range.