30-Inch Dual-Fuel Range

TRANSITIONAL



DOP30T940DS/DA — Silver Stainless, natural gas, liquid propane

Features & Benefits

- Dual Four-Part Pure Convection system
- SimmerSear™ brass burners
- OLED control panel with SmartThings Wi-Fi connectivity
- Auto Connect to compatible ventilation through Bluetooth
- Air sous vide
- Digital temperature probe
- Self-clean oven
- Perma-Flame™
- SoftShut™ hinges
- LP conversion kit
- Voice commands through Bixby/Alexa/Google

Weights & Dimensions

NET WEIGHT (LBS)	238
SHIPPING WEIGHT (LBS)	265
PRODUCT DIMENSIONS (W X H X D IN INCHES)	29 15/16 x 36 1/16 x 27 1/16

Technical Details

ELECTRICAL REQUIREMENTS	240V, 60 Hz, 40A
AVAILABLE FUEL TYPES	Natural gas, liquid propane
LP CONVERSION KIT (INCLUDED)	Yes

Warranty

FULL COVERAGE	2 years

Accessories (Optional)

ARG30	Griddle for 30" Range

Controls

CONTROL TYPE	2.25" PMOLED touchscreen & knobs
ILLUMINA™ KNOBS	White
WI-FI + SMARTTHINGS	Yes
BLUETOOTH AUTO CONNECT VENTILATION	Yes
CONTROL SHOWER LIGHTING	No
CLOCK	Yes
DELAY START	Yes
KITCHEN TIMER	Yes
CHILD LOCK	Yes
SABBATH MODE	Yes

Oven

OVEN CAPACITY (CU. FT.)	6.3
CONVECTION	Four-Part Pure
BAKE ELEMENT	3,000W
BROIL ELEMENT	4,200W
CONVECTION ELEMENT	1,300W
TEMPERATURE PROBE	Yes
LIGHTING	Halogen
SELF-CLEAN	Self-clean, GreenClean™
SOFTSHUT™	Yes

Cooktop

NUMBER OF BURNERS	4
PERMA-FLAME™ (AUTO RE-IGNITION)	Yes
LEFT FRONT (BTU)	16,000
LEFT REAR (BTU)	16,000
RIGHT FRONT (BTU)	23,000
RIGHT REAR (BTU)	9,500
BRASS BURNER CAPS	Yes
GRIDDLE	Sold separately
WOK RING	Yes

Model numbers, specifications and prices are subject to change at any time without notice. Visit dacor.com for the most up-to-date information. | Effective April 1, 2026

30-Inch Dual-Fuel Range

TRANSITIONAL

Product Dimensions

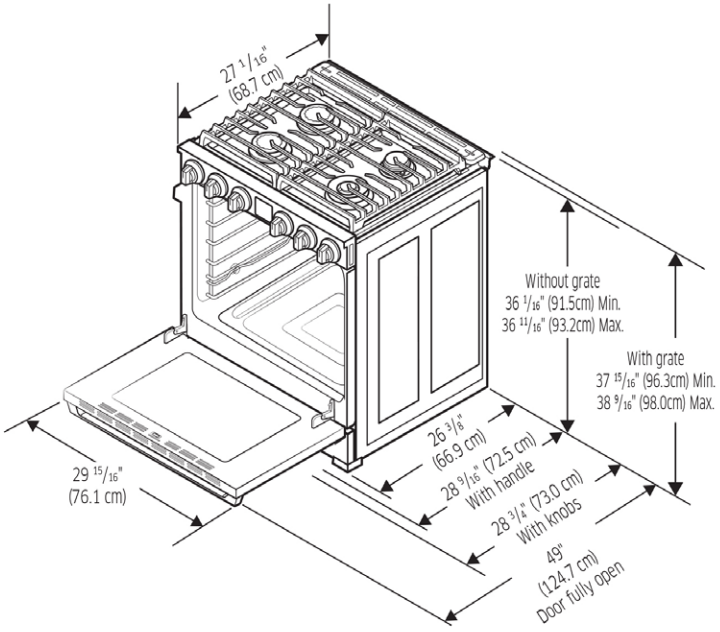

Installation Requirements

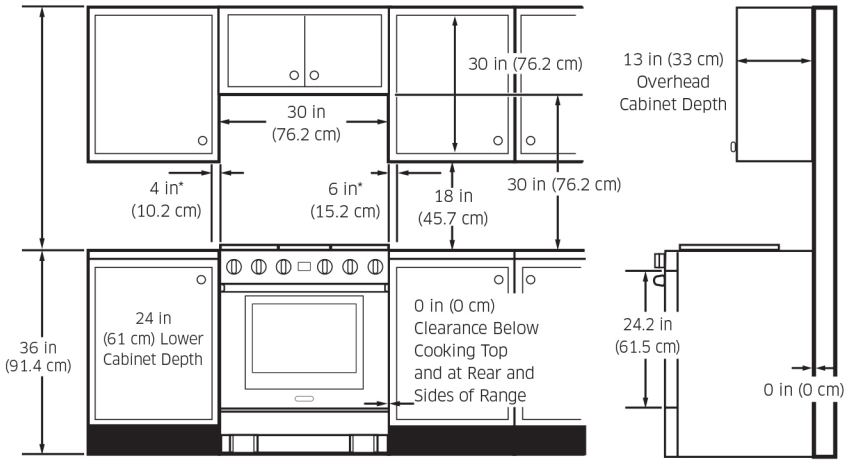

*Side clearance above cooking surface to any objects, i.e., wall.

Model numbers, specifications and prices are subject to change at any time without notice. Visit dacor.com for the most up-to-date information. | Effective April 1, 2026