30-Inch Single Wall Oven with Steam

CONTEMPORARY



DOB30M977SS/DA — Silver Stainless
DOB30M977SM/DA — Graphite Stainless

Features & Benefits

- Steam-Assist oven
- Dual Four-Part Pure Convection system
- BrightVue™ LED & Halogen lighting
- 7-inch LCD control panel with SmartThings Wi-Fi connectivity
- Chef Mode guided cooking
- Digital temperature probe
- Self-clean oven
- SoftShut™ hinges

Weights & Dimensions

NET WEIGHT (LBS)	186
SHIPPING WEIGHT (LBS)	268
PRODUCT DIMENSIONS (W X H X D IN INCHES)	29 ⅞ x 28 ⅞ x 24 ½
STANDARD CUTOUT REQUIRED (W X H X D IN INCHES)	28 ¾ x 27 ¼ x 23 ½
FLUSH CUTOUT REQUIRED (W X H X D IN INCHES)	30 ¼ x 29 ⅛ x 24 ⅞

Technical Details

ELECTRICAL REQUIREMENTS	240/208V, 60 Hz, 30A

Warranty

FULL COVERAGE	2 years

Controls

CONTROL TYPE	7” motorized LCD touchscreen
CHEF MODE GUIDED COOKING	Yes
WI-FI + SMARTTHINGS	Yes
CLOCK	Yes
DELAY START	Yes
KITCHEN TIMER	Yes
CHILD LOCK	Yes
SABBATH MODE	Yes

Steam Oven

OVEN CAPACITY (CU. FT.)	4.8
CONVECTION	Dual Four-Part Pure
STEAM	Steam-Assist
BAKE ELEMENT	3,000W - 8 pass
BROIL ELEMENT	4,400W - 10 pass
CONVECTION ELEMENT	2 x 1,300W
INSTANTHEAT™ (NO PREHEAT)	Yes
TEMPERATURE PROBE	Yes
LIGHTING	BrightVue™ - LED & Halogen
SELF-CLEAN	Self-clean, GreenClean™
SOFTSHUT™	Yes

Battery

BATTERY CHEMISTRY	Lithium-Ion (Not included in products manufactured after June 2026)

Model numbers, specifications and prices are subject to change at any time without notice. Visit dacor.com for the most up-to-date information. | Effective August 1, 2026

30-Inch Single Wall Oven with Steam

CONTEMPORARY

Product Dimensions

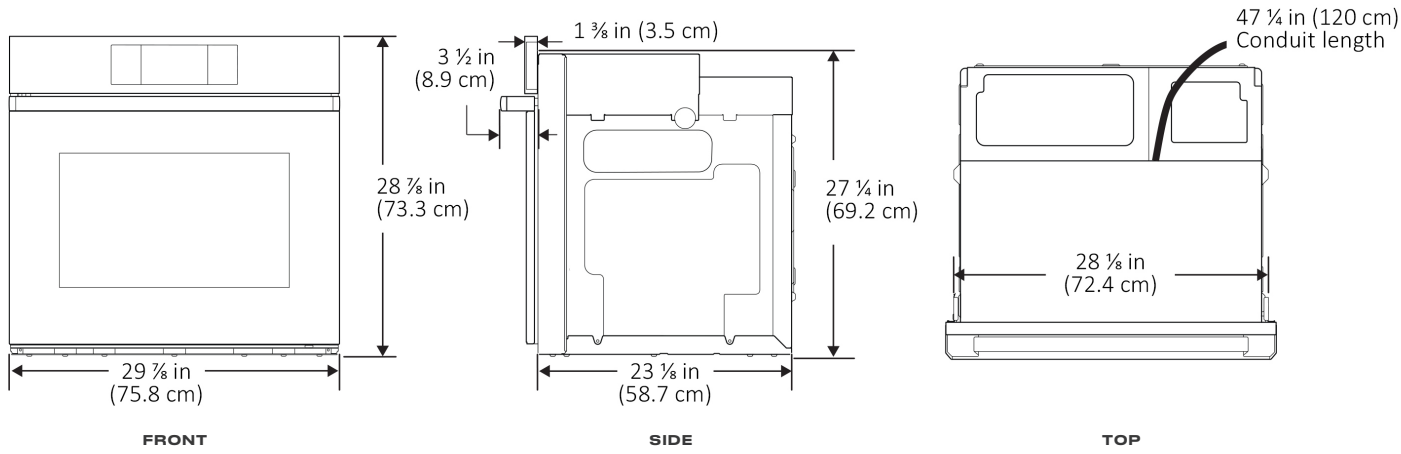

Installation Cutout Dimensions (Flush)

Allow a minimum of 22" / 55.9 cm for clearance to adjacent corners, drawers, walls, etc. when door is open.

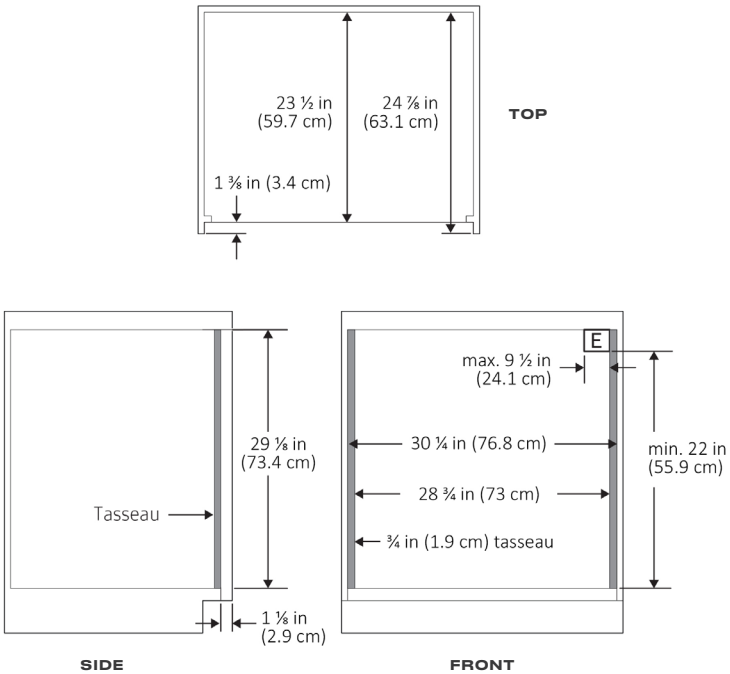

Installation Cutout Dimensions (Standard)

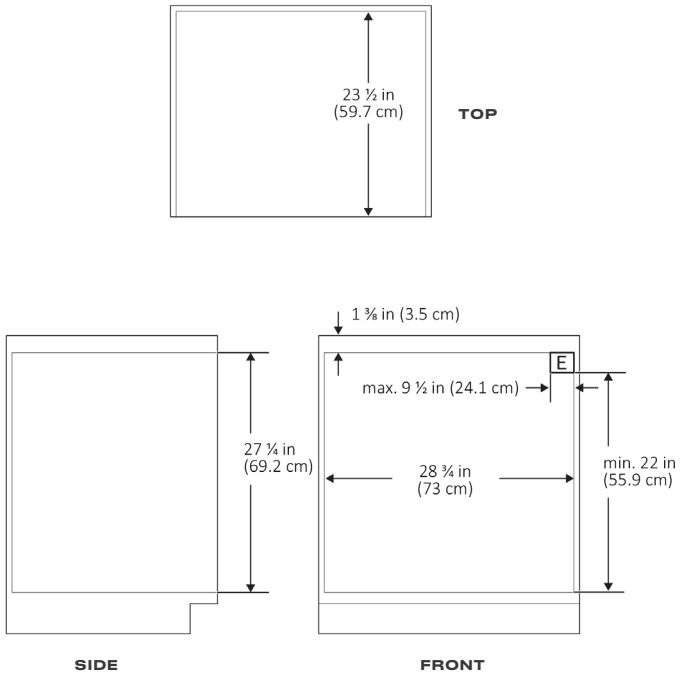

Model numbers, specifications and prices are subject to change at any time without notice. Visit dacor.com for the most up-to-date information. | Effective August 1, 2026