30-Inch Drawer Microwave



Controls

CONTROL TYPE	Glass-Touch
CLOCK	Yes
CHILD LOCK	Yes

Microwave Oven

MICROWAVE CAPACITY (CU. FT.)	1.2
MICROWAVE POWER	950W
SENSOR COOK	Yes
CONVECTION	No
LIGHTING	Halogen

DMR30M977WS — Silver Stainless
DMR30M977WM — Graphite Stainless

Features & Benefits

- Motorized drawer
- 10 preset modes
- Smart moisture sensor
- Multi-sequence cooking
- Automatic start
- Keep warm
- Electronic control panel

Weights & Dimensions

NET WEIGHT (LBS)	105
SHIPPING WEIGHT (LBS)	89
PRODUCT DIMENSIONS (W X H X D IN INCHES)	30 x 15 7/8 x 23 1/64
STANDARD CUTOUT REQUIRED (W X H X D IN INCHES)	22 1/8 (min.) to 28 7/16 (max.) x 15 9/16 x 23 1/2
FLUSH CUTOUT REQUIRED (W X H X D IN INCHES)	30 5/16 (min.) to 30 5/8 (max.) x 16 7/8 x 23 1/2

Technical Details

ELECTRICAL REQUIREMENTS	120V, 60 Hz, 15A

Warranty

FULL COVERAGE	2 years

Accessories (Optional)

ADMRF30S	Flush installation kit, Silver Stainless
ADMRF30M	Flush installation kit, Graphite Stainless

Model numbers, specifications and prices are subject to change at any time without notice. Visit dacor.com for the most up-to-date information. | Effective April 1, 2026

30-Inch Drawer Microwave

Product Dimensions	
A - OVERALL CHASSIS WIDTH (IN/CM)	21 5/8 / 55
B - WIDTH OF CHASSIS NOTCH (IN/CM)	4 11/16 / 11.9
C - HEIGHT OF CHASSIS NOTCH (IN/CM)	1 3/4 / 4.4
D - CHASSIS DEPTH (IN/CM)	21 7/8 / 55.6
E - MICROWAVE FACE WIDTH (IN/CM)	30 / 76.2
F - WITH MODERNIST HANDLE (IN/CM)	15 7/8 / 40.3
G - CHASSIS HEIGHT (IN/CM)	14 19/32 / 37
H - DOOR FACE THICKNESS (IN/CM)	1 9/64 / 2.9
I - AUTOMATIC DRAWER-OPEN DEPTH (IN/CM)	15 / 38.1
J - CHASSIS NOTCH WIDTH (IN/CM)	4 / 10.2

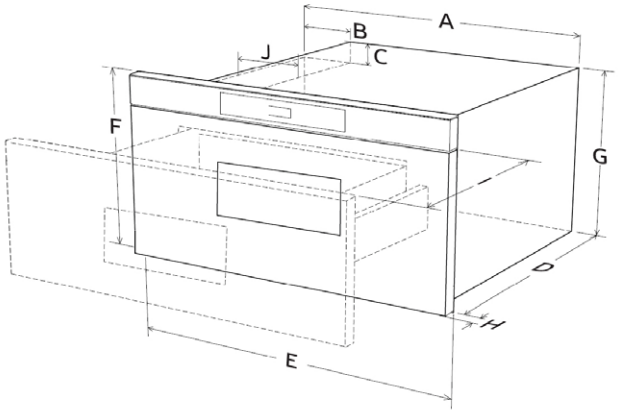

Product Dimensions, Cont.	
A - ANTI-TIP BLOCK LENGTH (IN/CM)	6 / 15.2
B - ELECTRICAL OUTLET LOCATION (IN/CM)	-
C - ANTI-TIP BLOCK (IN/CM)	-
D - OUTLET LOCATION HEIGHT (IN/CM)	5 / 12.7
E - ANTI-TIP BLOCK WIDTH (IN/CM)	3 1/2 / 8.9
F - OUTLET LOCATION WIDTH (IN/CM)	4 / 10.2
G - CUTOUT-OPENING WIDTH RANGE (IN/CM)	min. 22 1/8 / 56.2 to max. 28 7/16 / 72.2
H - CUTOUT FLOOR TO BLOCK BOTTOM (IN/CM)	14 13/16 / 37.6
I - MINIMUM OVERLAP ALLOWANCE, SIDES (IN/CM)	23/32 / 1.8
J - MINIMUM CUTOUT DEPTH (IN/CM)	23 1/2 / 59.7
K - MINIMUM OVERLAP ALLOWANCE (IN/CM)	3/16 / 0.5
L - NOMINAL COUNTERTOP HEIGHT (IN/CM)	36 / 91.4
M - MINIMUM OVERLAP ALLOWANCE, BOTTOM (IN/CM)	1/8 / 0.3
N - MINIMUM CABINET WIDTH (IN/CM)	30 / 76.2
O - CUTOUT HEIGHT (IN/CM)	15 9/16 / 39.5

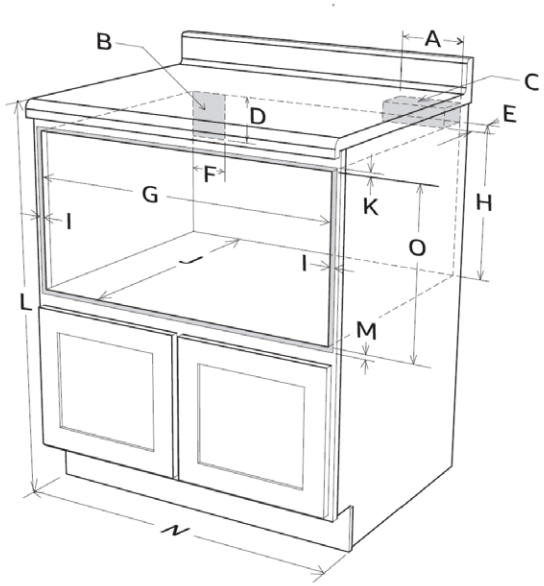

Model numbers, specifications and prices are subject to change at any time without notice. Visit dacor.com for the most up-to-date information. | Effective April 1, 2026