48-Inch Hood Liner



Controls	
CONTROL TYPE	Knobs
WI-FI + SMARTTHINGS	No
BLUETOOTH AUTO CONNECT VENTILATION	No
Ventilation	
INSTALLATION	Wall
RECIRCULATION CAPABLE	No
CFM	1,200
FAN SPEEDS	4 (3 + booster)
FILTER	Professional baffle
LIGHTING	Strip LED
AUTO ON (HEAT SENSOR)	Yes
Battery	
BATTERY CHEMISTRY	Lithium-ion (Li-ion)

DHD48U790LS/DA — Silver Stainless

Features & Benefits

- 1,200 CFM internal dual blower
- Four-speed fan
- Strip LED lighting
- Removable professional baffle filters
- Auto-On temperature sensor

Weights & Dimensions	
NET WEIGHT (LBS)	29
SHIPPING WEIGHT (LBS)	61
PRODUCT DIMENSIONS (W X H X D IN INCHES)	48 x 11 15/16 x 22
Technical Details	
ELECTRICAL REQUIREMENTS	120V, 60 Hz, 15A
Warranty	
FULL COVERAGE	2 years

Model numbers, specifications and prices are subject to change at any time without notice. Visit dacor.com for the most up-to-date information. | Effective July 1, 2026

48-Inch Hood Liner

Product Dimensions	
A - (IN / CM)	46 ½ / 117.8
B - (IN / CM)	22 / 55.9
C - (IN / CM)	5 7/16 / 13.8
D - (IN / CM)	6 ½ / 16.4
E - (IN / CM)	29 13/16 / 75.7
F - (IN / CM)	12 7/16 / 31.4
G - (IN / CM)	27 9/16 / 70
H - (IN / CM)	10 ⅛ / 25.7
I - (IN / CM)	10 / 25.4
J - (IN / CM)	¾ / 1.9

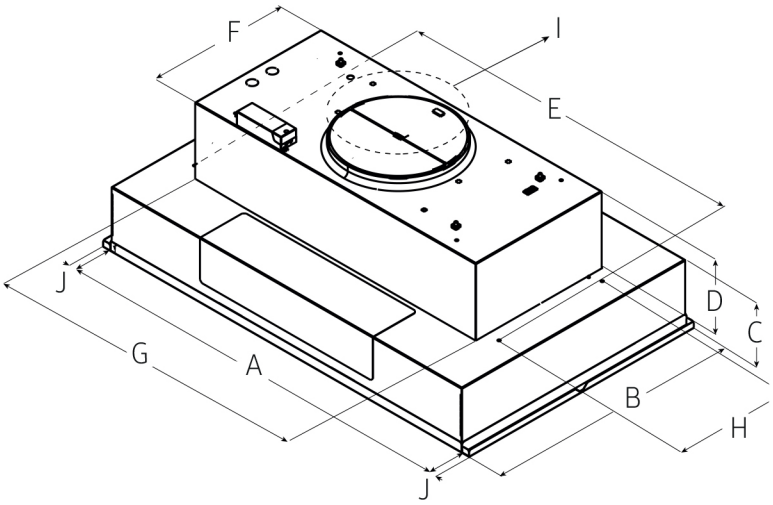

Model numbers, specifications and prices are subject to change at any time without notice. Visit dacor.com for the most up-to-date information. | Effective July 1, 2026