42-Inch Chimney Island Hood



Controls	
CONTROL TYPE	Glass-Touch
WI-FI + SMARTTHINGS	Yes (with Auto Connect compatible cooktop)
BLUETOOTH AUTO CONNECT VENTILATION	Yes

Ventilation	
INSTALLATION	Island
RECIRCULATION CAPABLE	No
CFM	1,200
FAN SPEEDS	4 (3 + booster)
FILTER	Professional baffle
LIGHTING	Strip LED
AUTO ON (HEAT SENSOR)	Yes

DHD42U990IS/DA — Silver Stainless
DHD42U990IM/DA — Graphite Stainless

Features & Benefits

- 1,200 CFM internal dual blower
- Four-speed fan
- Strip LED lighting
- Removable professional baffle filters
- Auto Connect to compatible cooking product through Bluetooth
- Auto-On temperature sensor
- Glass-Touch Control panel

Weights & Dimensions	
NET WEIGHT (LBS)	78
SHIPPING WEIGHT (LBS)	85
PRODUCT DIMENSIONS (W X H X D IN INCHES)	42 x 2 ⅜ x 27 ⅛

Technical Details	
ELECTRICAL REQUIREMENTS	120V, 60 Hz, 15A

Warranty	
FULL COVERAGE	2 years

Accessories	
DHD-D0000IS/DA	Duct cover extension, Silver Stainless
DHD-D0000IM/DA	Duct cover extension, Graphite Stainless

Model numbers, specifications and prices are subject to change at any time without notice. Visit dacor.com for the most up-to-date information. | Effective April 1, 2026

42-Inch Chimney Island Hood

Product Dimensions	
A - (IN / CM)	42 / 106.5
B - (IN / CM)	27 ¼ / 69.3
C - (IN / CM)	max. 52 ½ / 133.3 min. 32 ¼ / 82
D - (IN / CM)	10 / 25.4
E - (IN / CM)	14 11/16 / 37.3
F - (IN / CM)	16 ½ / 42
G - (IN / CM)	2 ⅜ / 6

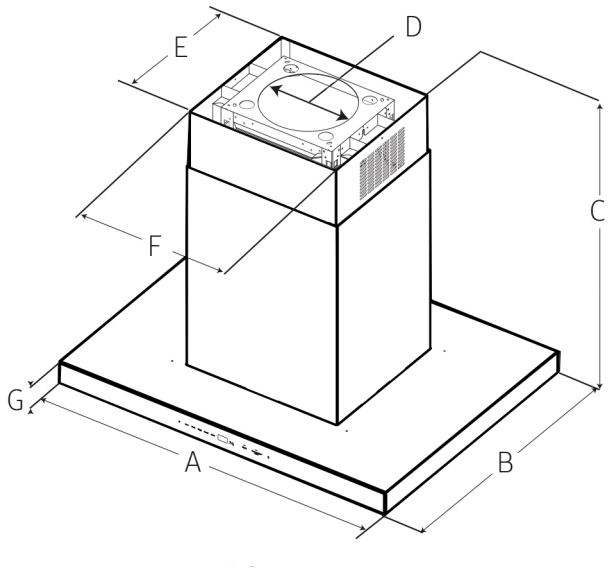

Model numbers, specifications and prices are subject to change at any time without notice. Visit dacor.com for the most up-to-date information. | Effective April 1, 2026