36-Inch Pro-Canopy Hood



Controls	
CONTROL TYPE	Glass-Touch
WI-FI + SMARTTHINGS	Yes (with Auto Connect compatible cooktop)
BLUETOOTH AUTO CONNECT VENTILATION	Yes

Ventilation	
INSTALLATION	Wall
RECIRCULATION CAPABLE	No
CFM	1,200
FAN SPEEDS	4 (3 + booster)
FILTER	Professional baffle
LIGHTING	Strip LED
AUTO ON (HEAT SENSOR)	Yes

DHD36U990CS/DA — Silver Stainless
DHD36U990CM/DA — Graphite Stainless

Features & Benefits

- 1,200 CFM internal dual blower
- Four-speed fan
- Strip LED lighting
- Removable professional baffle filters
- Auto Connect to compatible cooking product through Bluetooth
- Auto-On temperature sensor
- Glass-Touch Control panel

Weights & Dimensions

NET WEIGHT (LBS)	47
SHIPPING WEIGHT (LBS)	77
PRODUCT DIMENSIONS (W X H X D IN INCHES)	36 x 18 x 25

Technical Details

ELECTRICAL REQUIREMENTS	120V, 60 Hz, 15A

Warranty

FULL COVERAGE	2 years

Accessories

DHD-D3620CS/DA	Duct cover, Silver Stainless, 36" W x 12" H
DHD-D3620CM/DA	Duct cover, Graphite Stainless, 36" W x 12" H
DHD-D0000CS/DA	Duct cover extension, Silver Stainless, 16.5" W
DHD-D0000CM/DA	Duct cover extension, Graphite Stainless, 16.5" W

Model numbers, specifications and prices are subject to change at any time without notice. Visit dacor.com for the most up-to-date information. | Effective April 1, 2026

36-Inch Pro-Canopy Hood

Product Dimensions	
A - (IN / CM)	36 / 91.2
B - (IN / CM)	25 / 63.2
C - (IN / CM)	18 / 45.7
D - (IN / CM)	12 / 30.5
E - (IN / CM)	2 ¾ / 7
F - (IN / CM)	35 ⅛ / 89.2
G - (IN / CM)	7 ½ / 19
H - (IN / CM)	2 ⁹⁄₁₆ / 6.5
I - (IN / CM)	⅜ / 1

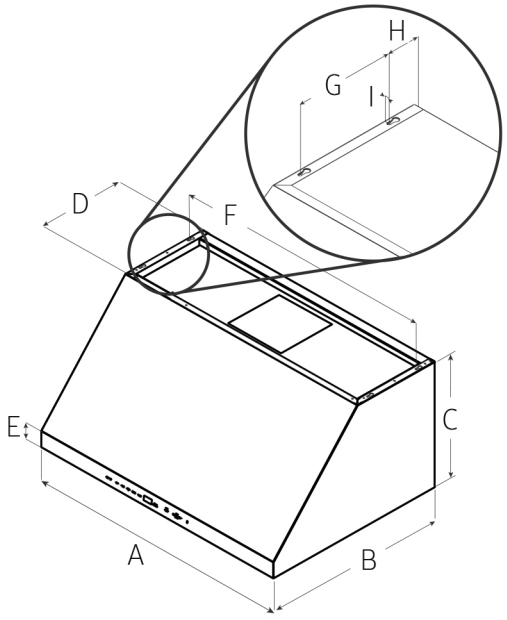

Model numbers, specifications and prices are subject to change at any time without notice. Visit dacor.com for the most up-to-date information. | Effective April 1, 2026