Cub Cadet®

Illustrated Parts Manual

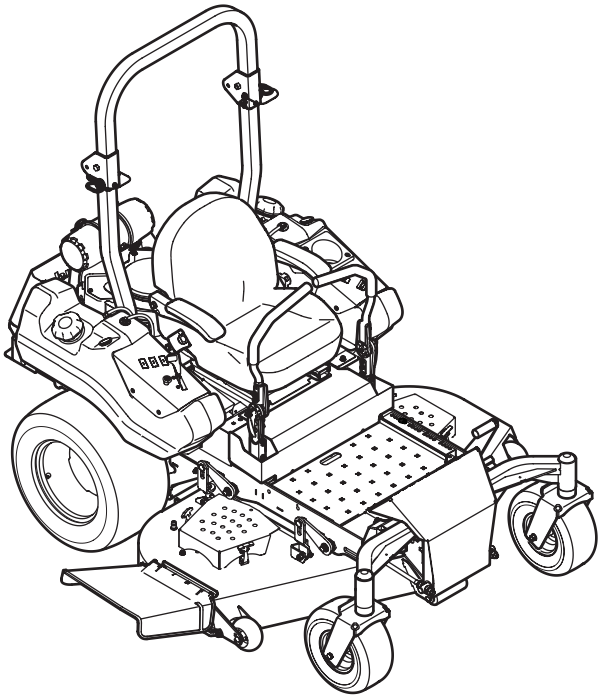

TANK LZ

CUB CADET LLC, P.O. BOX 361131 CLEVELAND, OHIO 44136-0019

Printed In USA

Form No. 769-10658
March 2, 2015

To The Owner

Thank You

Thank you for purchasing a Cub Cadet Zero-Turn Tractor. It was carefully engineered to provide excellent performance when properly operated and maintained.

All information in this manual is relative to the most recent product information available at the time of printing. Please be aware that this Illustrated Part's Manual may cover a range of product specifications for various models.

Components listed and/or illustrated in this manual may not be applicable to all models. We reserve the right to change product specifications, designs and equipment without notice and without incurring obligation.

Throughout this manual, all references to *right* (RH) and *left* (LH) are observed from the operating position.

Table of Contents

Frame 3
Seat Assembly 4
Hydro Controls 6
Control Group 8
Fuel Tank Assembly 10
Front Axle Assembly 11
Control Assembly 12
Deck Lift Assembly 14
Engine Accessories (Kohler) 16
60" Deck 18
Electrical 22
Electrical Schematic 23
Tank LZ Labels 24
Kohler CV742-3032 26

Record Product Information

To ease in ordering replacement parts, please locate the model plate on the equipment and record the information in the provided area to the right. You can locate the model plate by looking beneath the seat.

Model Number

Serial Number

Painted Parts

When ordering painted service parts, a four digit color suffix must be added to the part number (e.g. 783-XXXXX-0637). Please refer to the table below for current color codes:

0637	Black
4021	Yellow (Cub Cadet)
0499	Beige (Cub Cadet)
0685	Blue (Cub Cadet)
0691	Black Jack (Cub Cadet Commercial)

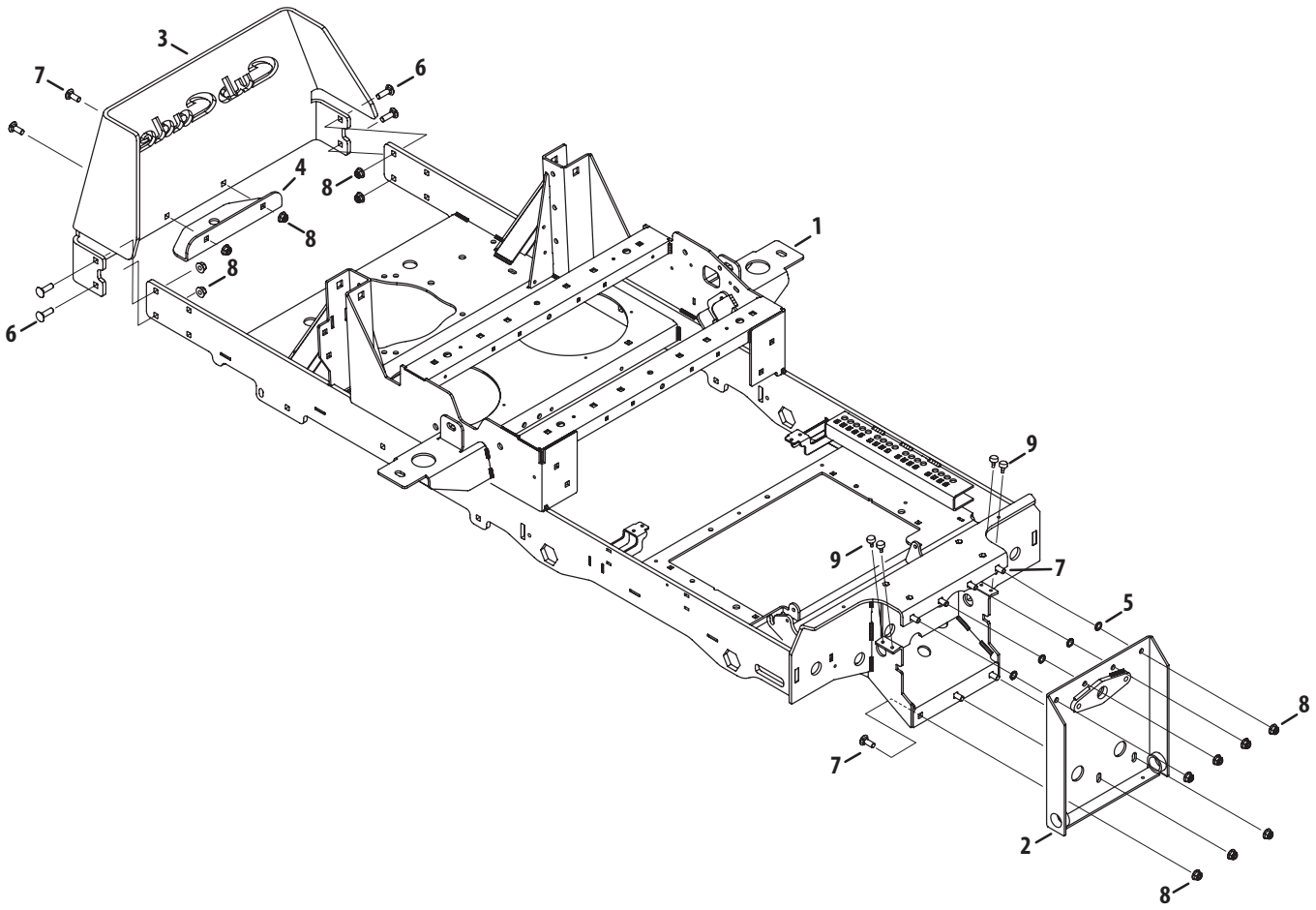

Ref	Part Number	Description
1	680-00348	Frame Assembly
2	680-00341	Front Axle Bracket Assembly
3	703-09461	Rear Bumper
4	703-09543	Hitch Bracket
5	712-0229	Push Nut, 3/8
6	710-05408	Carriage Bolt, 3/8-16 x 1.25
7	710-3168	Carriage Bolt, 3/8-16 x 1.00
8	712-04065	Nylock Nut, 3/8-16
9	735-0271A	Bumper, .62 Dia. x .3

Seat Assembly

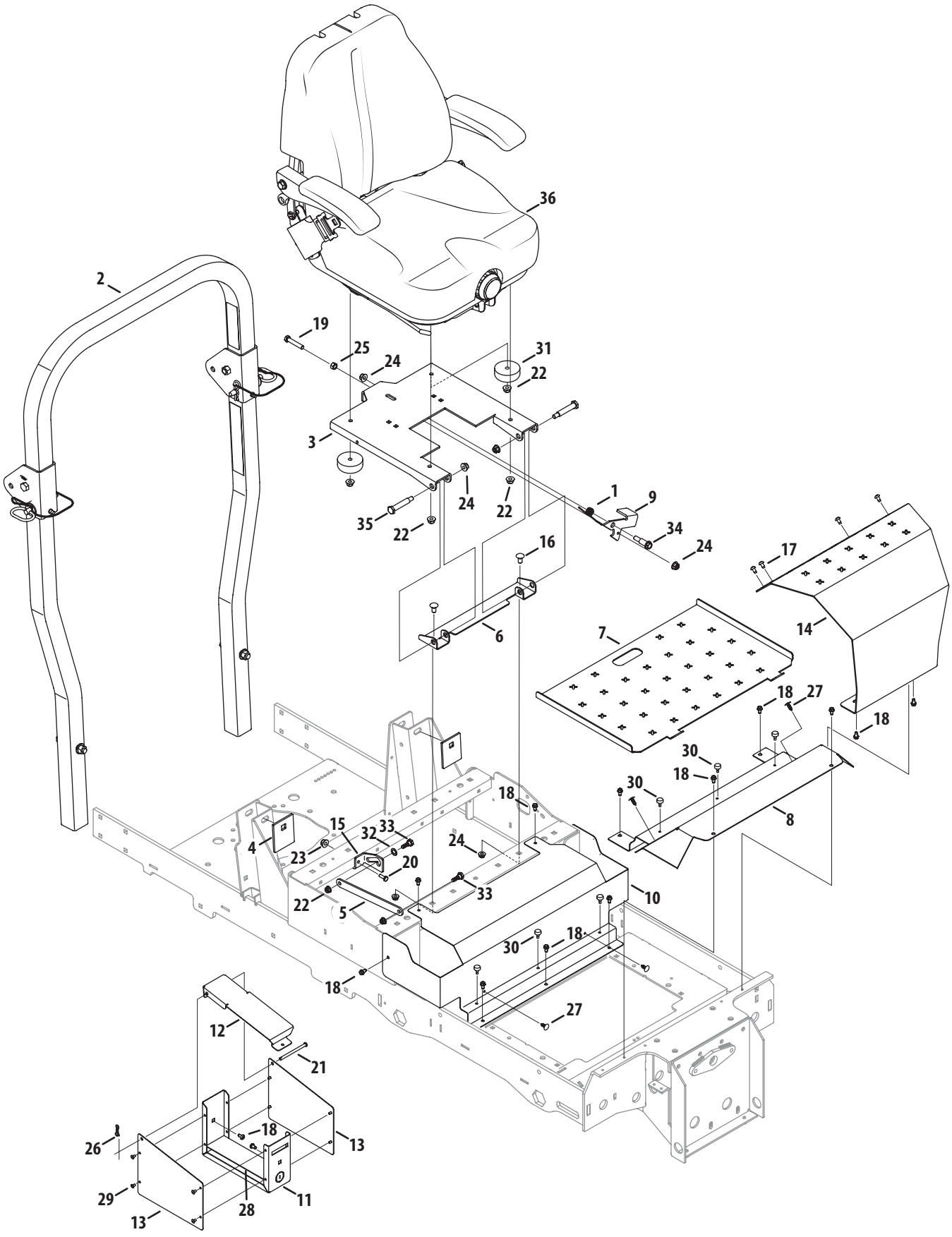

Ref.	Part Number	Description
1	01008140P	Torsion Spring, .725 x 1.0 x .09
2	680-00175	Folding ROPS Assembly
3	703-07814	Seat Mounting Bracket
4	703-07880	Deck Reinforcement Plate
5	703-08198	Seat Lockout Bracket
6	703-08241	Seat Mounting Bracket
7	703-08324	Floor Panel Tray
8	703-08416	Floor Panel
9	703-08480	Seat Lever Latch
10	703-08496	Control Panel Cover
11	703-08511	Storage Box
12	703-08513	Storage Box Lid
13	703-08519	Storage Box Side Panel
14	703-08633A	Front Panel Cover
15	703-08758A	Seat Lockout Mount
16	710-0389	Carriage Bolt, 3/8-16 x .75
17	710-05070A	Screw, ¼-20 x .5
18	710-0599	Hex Flange Screw, 1/4-20 x .500

Ref.	Part Number	Description
19	710-0859	Hex Cap Screw, 3/8-16 x 2.50
20	710-3015	Hex Cap Screw, 1/4-20 x .75
21	711-05607A	Clevis Pin, .25 x 3.5
22	712-04063	Nut, 5/16-18, Flangelock
23	712-04064	Nut, 1/4-20, Flangelock
24	712-04065	Nut, 3/8-16, Flangelock
25	912-3017	Nut, 3/8-16, Hex
26	714-04040	Cotter Pin, Bow Tie
27	726-3046	Clip, .250 Dia.
28	727-04385	Adhesive Pad
29	728-04016	Rivet, 3/16 x .325
30	735-0271A	Bumper, .62 Dia. x .3
31	735-04286	Rubber Bumper, 2.5 x 1.0
32	736-3024	Flat Washer, .469 x .750 x .06
33	938-0296	Shoulder Screw, 5/16-18 x .437 x .268
34	738-0966A	Shoulder Bolt, .50 x .925, 3/8-16
35	738-1011A	Shoulder Bolt, .500 x 2.23, 3/8-16
36	757-05011A	Seat

Hydro Controls

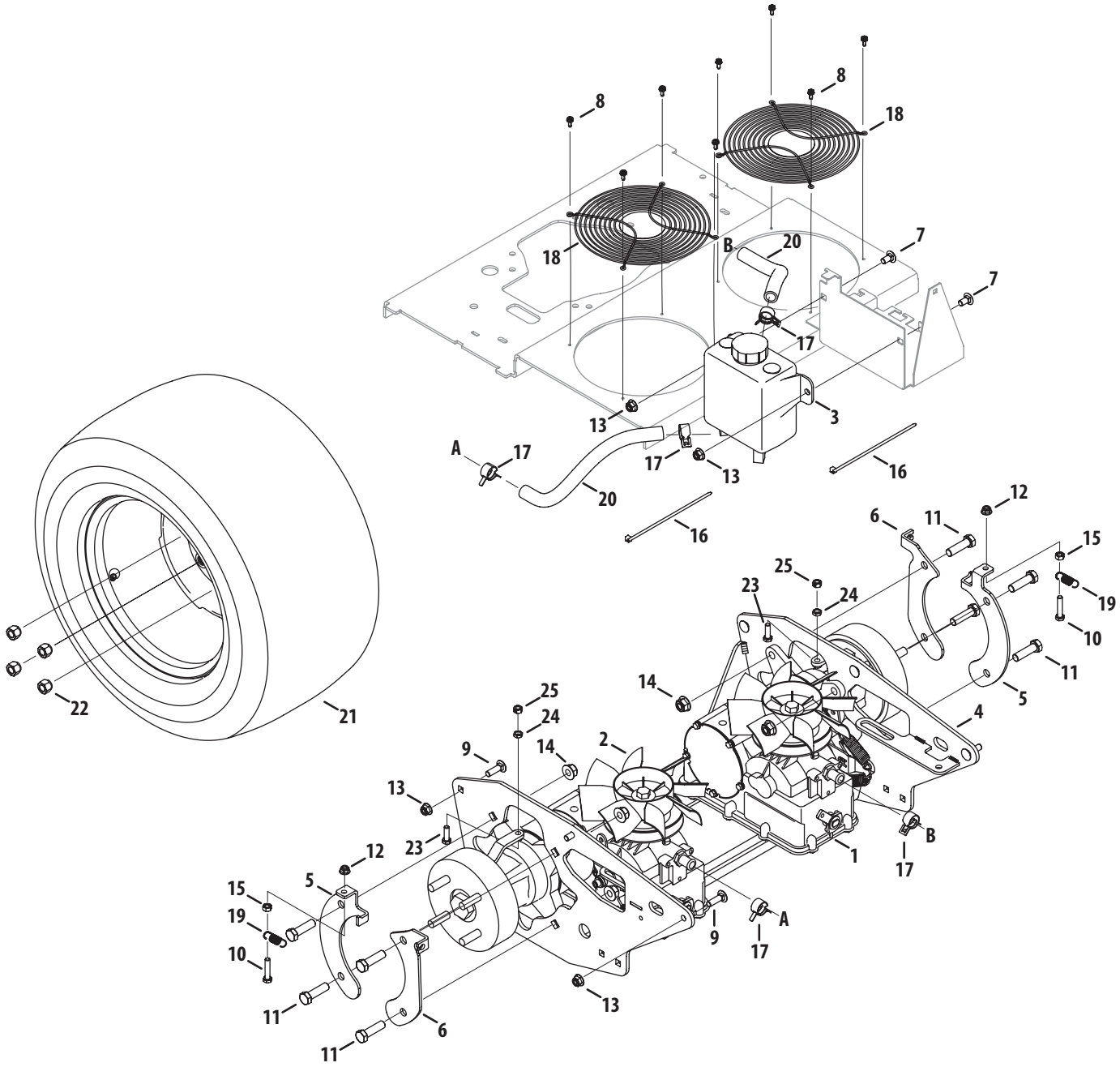

Ref.	Part Number	Description
1	918-07021	Transmission, LH
2	918-07022	Transmission, RH
3	931-04566	Hydro Tank Assembly
4	680-00336	Transmission Bracket Assembly
5	703-09657	Spring Brake Mounting Bracket
6	703-09658	Brake Cable Mounting Bracket
7	710-0389	Carriage Bolt, 3/8-16 x .75
8	1767754	Screw, 10-24 x .500
9	710-05408	Carriage Bolt, 3/8-16 x 1.25
10	710-0805A	Hex Cap Screw, 5/16-18 x 1.50
11	710-3067	Hex Cap Screw, 1/2-13 x 1.75
12	712-04063	Nut, 5/16-18, Flangelock
13	712-04065	Nut, 3/8-16, Flangelock
14	712-04150	Nut, 1/2-13, Flangelock
15	912-3010	Nut, 5/16-18, Hex
16	725-0157	Cable Tie
17	726-05017	Hose Clamp, .9375
18	732-04833	Fan Cover
19	732-05147	Extension Spring, .50 OD x 1.71
20	751-12281	Hose, 5/8 ID x 12.00 LG
21	634-05088	Wheel Assembly, 24 x 12-12
22	712-04311	Lug Nut, 1/2-13
23	710-0376	Hex Cap Screw, 5/16-18 x 1.00
24	712-3007	Jam Nut, 5/16-18
25	912-3009	Nut, Hexlock 5/16-18

Control Group

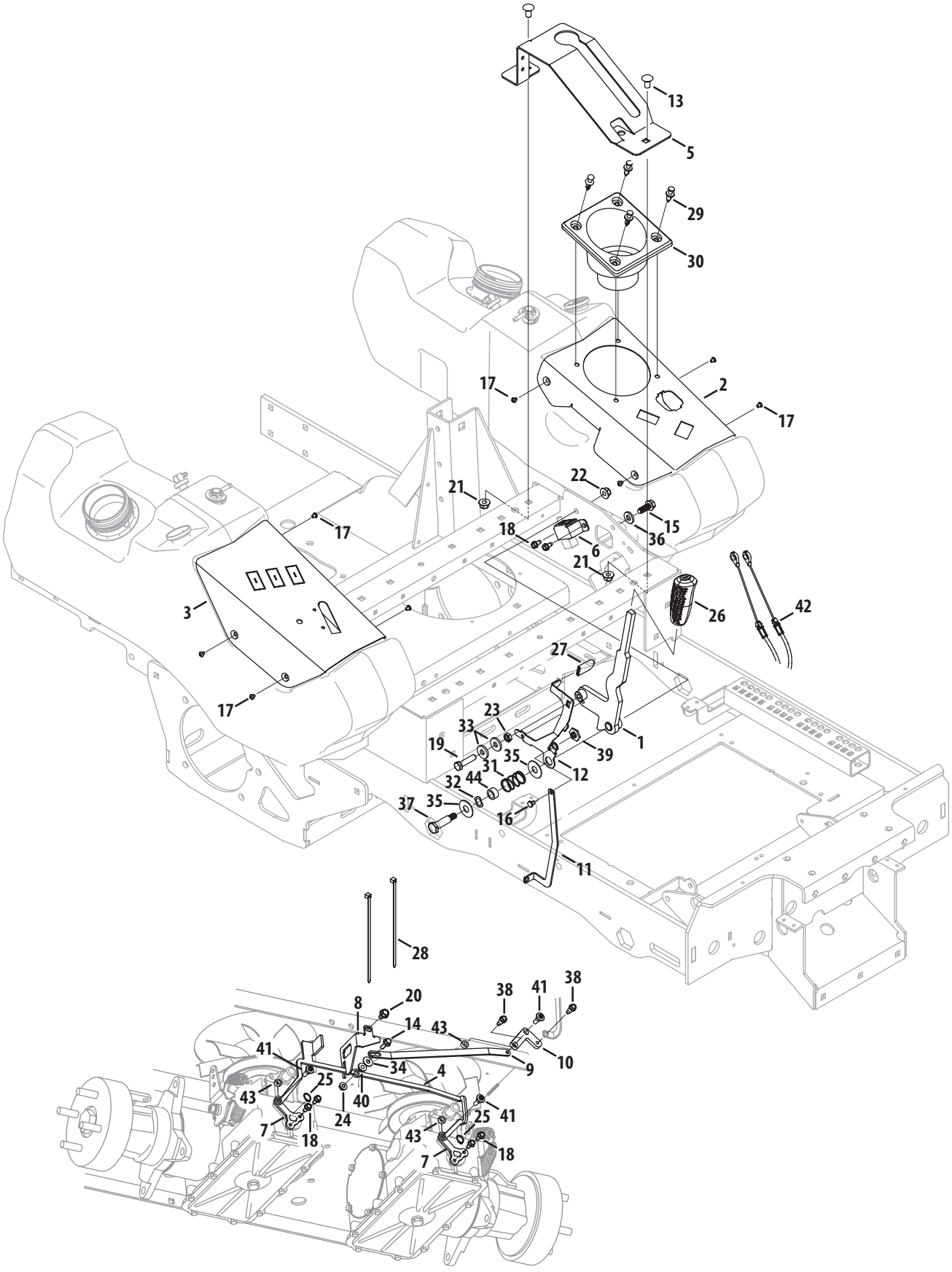

Ref.	Part Number	Description
1	680-00339	Brake Handle Assembly
2	703-08123	LH Control Panel
3	703-08482	RH Control Panel
4	703-09587A	Dump Valve Actuator Bracket
5	703-09592	Boot Brake Bracket
6	703-09604	Brake Switch Mount
7	703-09665	Transmission Bypass Lever
8	703-09701	Neutral Switch Bracket
9	703-09703	Transmission Actuator Arm
10	703-09731	Neutral Pivot Control Lever
11	703-09739A	Neutral Arm
12	703-09912	Dump Valve Release Lever
13	710-0389	Carriage Bolt, 3/8-16 x .75
14	710-04666	Hex Flange Screw, 1/4-20 x .75
15	710-04683C	Screw, 3/8-16 x 1.00
16	710-05132	Screw, M6 x 8mm
17	710-05421	Machine Screw, #10-32 x .25
18	710-0599	Hex Flange Screw, 1/4-20 x .500
19	710-06021	Hex Cap Screw, 3/8-16 x 1.50
20	710-0607	Screw, 5/16-18 x .50
21	712-04065	Nut, 3/8-16, Flangelock
22	912-0431	Nut, 3/8-16, Flangelock

Ref.	Part Number	Description
23	912-3008	Jam Nut, 3/8-16
24	912-3027	Nut, 1/4-20, Hexflange
25	916-0114	Retainer Ring
26	720-04139B	Grip, .50 ID
27	720-0433	Grip, Seat, Adjustment (Yellow)
28	725-0157	Cable Tie
29	728-0199	Rivet, .3125
30	731-08438	Cup Holder
31	732-04481	Compression Spring, .844 x .97 x 1.5
32	936-0232	Washer, Wave, .531 x .781 x .013
33	736-0258	Flat Washer, .385 x 1.00 x .135
34	736-0342	Flat Washer, .283 x .750 x .030
35	736-04237	Flat Washer, .508 x 1.325 x .040
36	936-3004	Flat Washer, .406 x .875 x .105
37	738-0213	Shoulder Screw, .498 x 1.445
38	738-04425	Shoulder Screw, .342 x .335, 1/4-28
39	738-04446	Shoulder Spacer, M6
40	738-04483	Shoulder Spacer, .375 x .625 x .20
41	738-0706C	Shoulder Screw, .375 x .280, 1/4-14
42	946-05103	Brake Cable
43	750-05297	Spacer, .256 x .500 x .240
44	750-06360	Spacer, .51 x .75 x .390

Fuel Tank Assembly

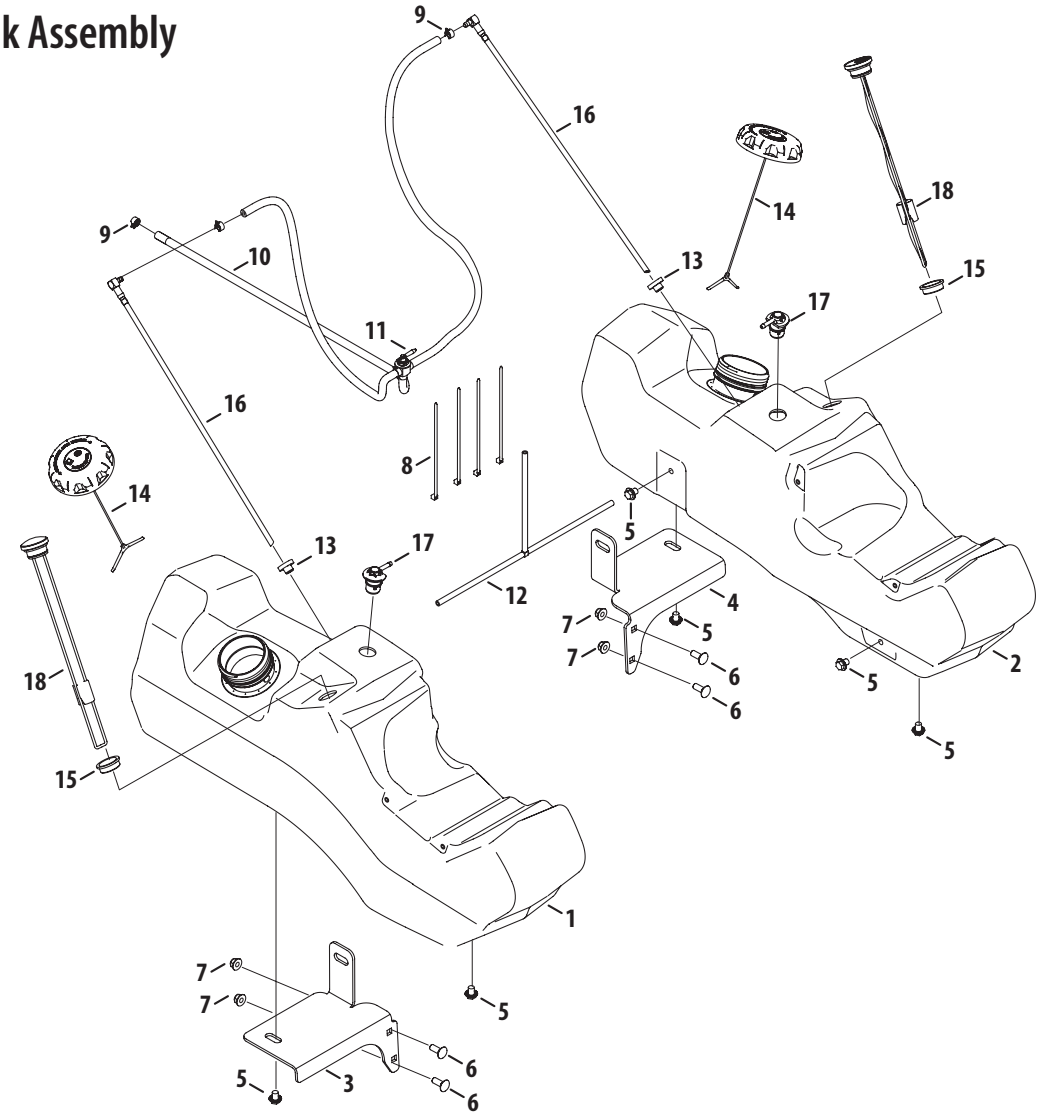

Ref.	Part Number	Description
1	651-04319A	Fuel Tank Assembly, RH
2	651-04320A	Fuel Tank Assembly, LH
3	703-08484	Rear Fuel Bracket, RH
4	703-08495	Rear Fuel Bracket, LH
5	710-05412	Hex Cap Screw, 3/8-16 x .500
6	710-3168	Carriage Bolt, 3/8-16 x .500
7	712-04065	Nut, 3/8-16, Flangelock
8	725-0157	Cable Tie
9	726-04123A	Hose Clamp, .500 Dia.
10	751-10349-84	Fuel Hose., 1/4

Ref.	Part Number	Description
11	751-12484	Fuel Switch
12	751-12282	Fuel Hose Assembly includes:
	- -	Hose, 3/16" Fuel Line (in inches)
	737-04341	Tee Fitting, Fuel
13	02002253	Grommet, Fuel Tank
14	951-12754	Fuel Cap
15	735-0699	Grommet, 1.58 OD x 1.21 ID x .5
16	951-12117	Fuel Pickup Valve
17	951-10375	Fuel Rollover Valve
18	951-12366	Fuel Gauge

Front Axle Assembly

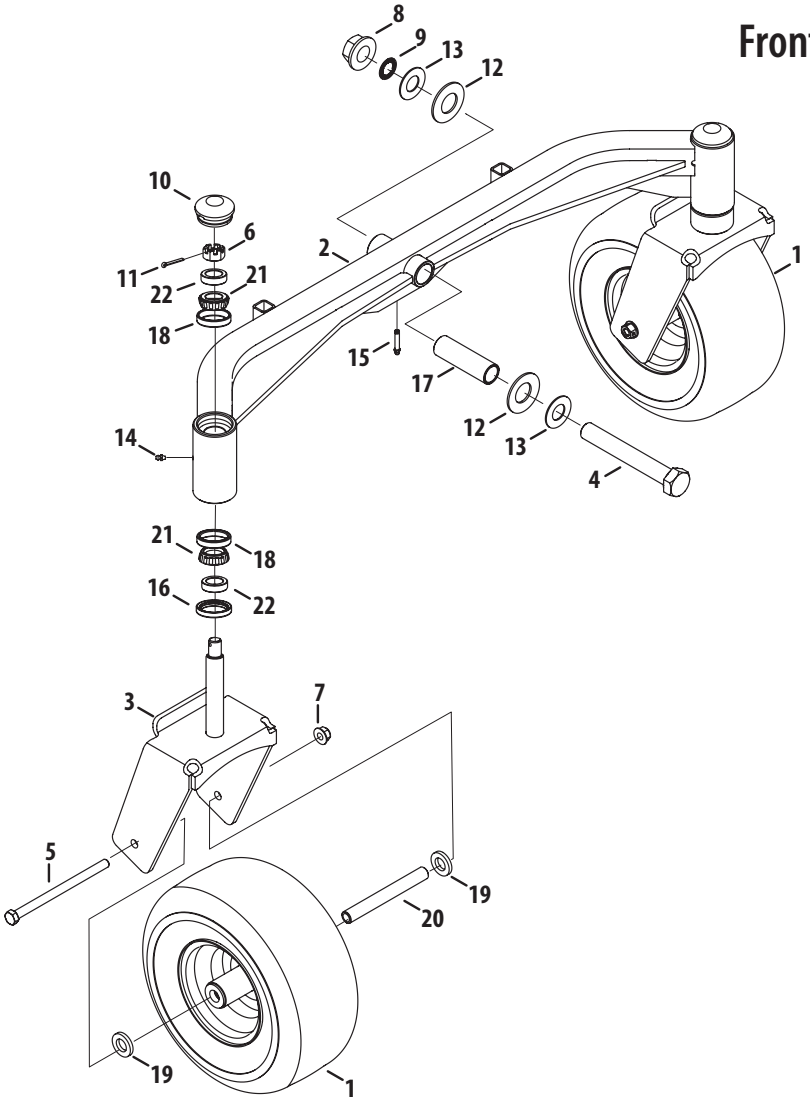

Ref.	Part Number	Description
1	634-04750	Wheel Assembly, 13 x 6.50-6
2	680-00323	Front Axle
3	680-00324	Yoke, Caster Wheel
4	710-05189	Hex Cap Screw, 1-14 x 7.0
5	710-05394A	Hex Cap Screw, 1/2-13 x 7.75
6	712-0359	Nut, 3/4-16, Slotted
7	712-04150	Nut, 1/2-13, Flangelock
8	712-04310	Nut, 1.0-14, Flangelock
9	716-04191	Retainer Ring
10	731-07348	Axle Grease Cap
11	714-0162	Cotter Pin, 5/32 x 1.25

Ref.	Part Number	Description
12	736-04604	Bell Washer, 1.25 x 2.50 x .180
13	736-04605	Washer, 1.00 x 2.00 x .075
14	737-04345	Grease Fitting, 1/4-28
15	737-04352	Grease Fitting, 1 39/64
16	721-04462	Seal
17	750-05438	Spacer, 1.005 x 1.247 x 4.1
18	741-04548	Cup Bearing
19	750-05553	Spacer, .812 ID x .218 LG
20	750-05625	Spacer, .515 x .749 x 6.313
21	741-04549	Cone Bearing
22	750-05600	Spacer, 1.00 x 1.50 x .437

Control Assembly

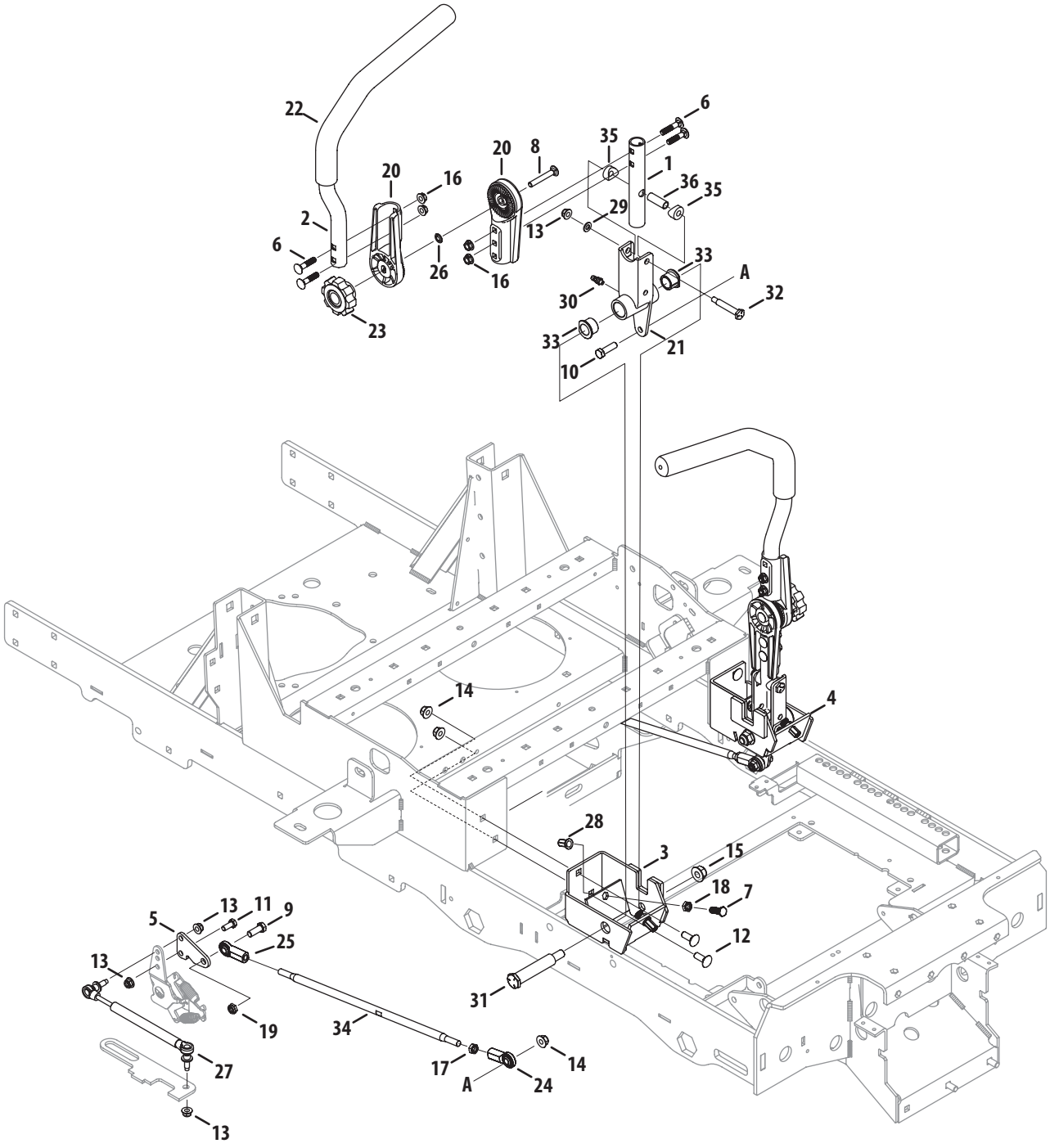

Ref.	Part Number	Description
1	680-00237	Lower Pivot Tube Weldment
2	680-00242	Lapbar Tube Weldment
3	680-00342A	Pivot Housing Weldment, RH
4	680-00343A	Pivot Housing Weldment, LH
5	703-08789	Return to Neutral Control Bracket
6	710-0262	Carriage Bolt, 5/16-18 x 1.50
7	710-04095	Hex Cap Screw, 3/8-16 x 1.00
8	710-0572	Carriage Bolt 5/16-18 x 2.25
9	710-0514	Hex Cap Screw, 3/8-16 x 1.00
10	710-3005	Hex Cap Screw, 3/8-16 x 1.25
11	710-3008	Hex Cap Screw, 5/16-18 x .75
12	710-3168	Carriage Bolt, 3/8-16 x 1.00
13	712-04063	Nut, 5/16-18, Flangelock
14	712-04065	Nut, 3/8-16, Flnagelock
15	712-04150	Nut, 1/2-13, Flangelock
16	712-04339	Nut, 5/16-18, Centerlock
17	712-0711	Jam Nut, 3/8-24
18	912-3008	Jam Nut, 3/8-16

Ref.	Part Number	Description
19	912-3020	Jam Nut, 3/8-16
20	719-04718	Handle Adjustment
21	719-04753	Pivot Control
22	720-04188	Grip, 1.0 ID
23	720-05057	Knob, 5/16-18
24	723-04080	Ball Joint, 3/8-24
25	723-04098	Ball Joint, 3/8-24, LH
26	726-0201	Speed Nut, .3125
27	727-04391	Damper Control Cylinder
28	728-04062A	Rivet Nut, 3/8-16
29	936-0264	Washer, .330 x .630 x .064
30	737-3001	Grease Fitting, 1/4-28
31	738-05033	Shoulder Bolt, .75 x 3.25, 1/2-13
32	738-04535	Shoulder Screw, .375 x 1.813, 5/16-18
33	741-04050	Bearing, .75 x 1.00 x .73
34	747-05678	Control Rod
35	750-05622	Spacer, .500 x .875 x .250
36	750-05673	Spacer, .385 x .500 x 1.40

Deck Lift Assembly

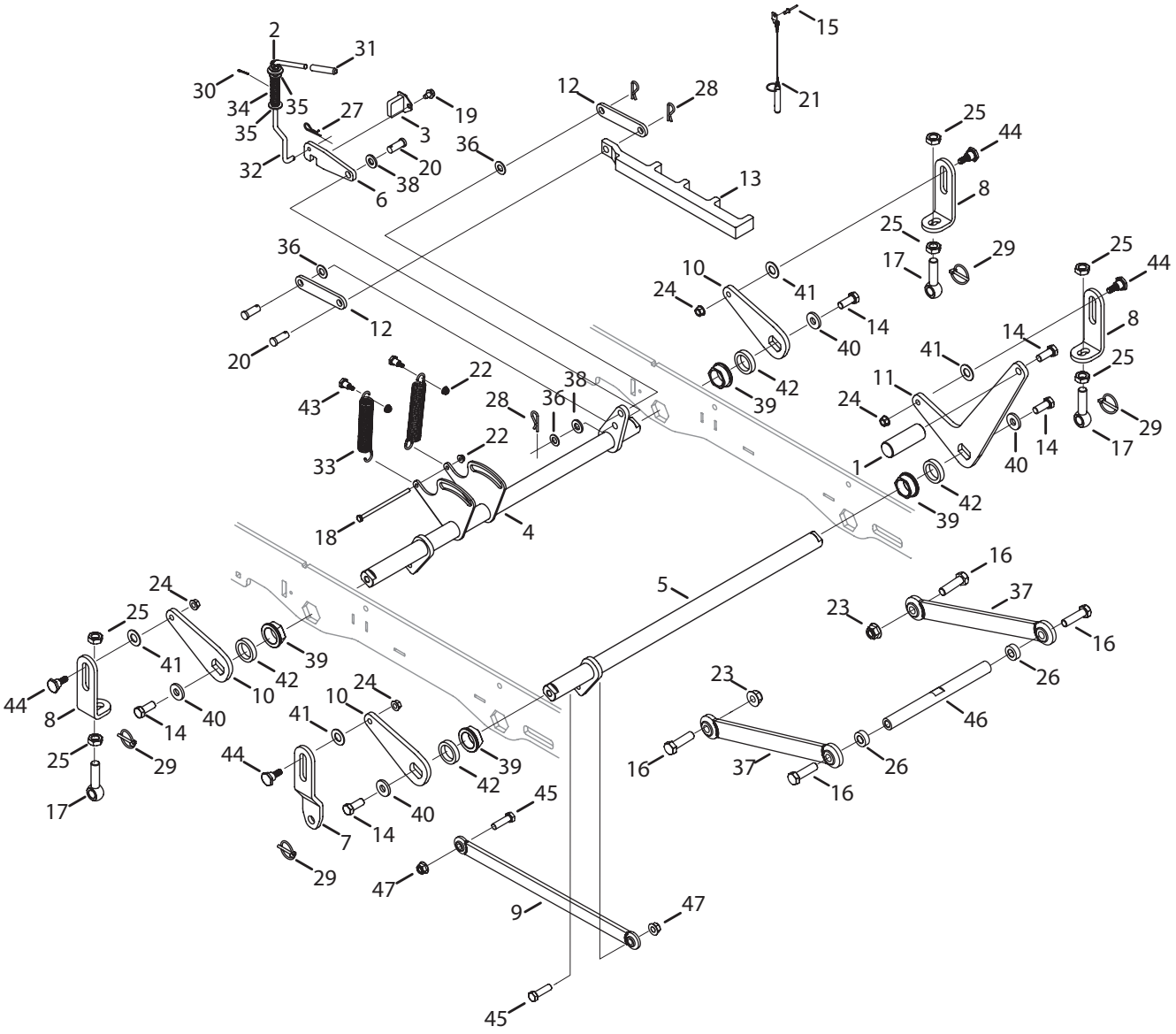

Ref.	Part Number	Description
1	02002596	Deck Lift Foot Pedal
2	941-0475	Bearing, .385 ID
3	680-00158	Lift Lock Mount
4	680-00350	Deck Lift Shaft, Rear
5	680-00349	Deck Lift Shaft, Front
6	703-08032	Latch Lock Bracket
7	703-08060	Lift Link Arm
8	703-08062	Deck Adjustment Lift Link Arm
9	680-00347	Deck Lift Arm Assembly
10	703-08070	Deck Lift Bellcrank
11	703-08252	Deck Lift Foot Pedal
12	703-08384	Deck Index Link Arm
13	703-08388A	Lift Index Slider Arm
14	710-04186	Hex Cap Screw, 1/2-13 x 1.25
15	728-04016	Rivet, 3/16 x .325
16	710-06047	Hex Cap Screw, 5/8-11 x 2.25
17	710-05355	Eye Bolt, 5/8-18 x 2.63
18	710-05418	Hex Cap Screw, 1/4-20 x 5.00
19	710-0607	Screw, 5/16-18 x .500
20	711-04061	Clevis Pin, .500 x 1.25
21	711-05629	Clevis Pin, .438 x 1.5
22	712-04064	Nut, 1/4-20, Flangelock
23	712-04151	Nut, 5/8-11, Flangelock
24	712-05007	Nut, 3/8-16, Flange Centerlock

Ref.	Part Number	Description
25	912-3015	Jam Nut, 5/8-11
26	950-0960A	Spacer, .635 x 1.25 x .445
27	914-0145	Click Pin, .092 x 1.64
28	914-0149B	Internal Cotter Pin
29	753-04070	Lynch Pin, .1875
30	914-0507	Cotter Pin, 3/32 x .750
31	720-04183	Lift Handle Grip
32	747-05465A	Lift Lock Rod
33	732-04929	Extension Spring, .969 OD x 6.180
34	732-0992	Compression Spring, .656 OD x 2.445
35	736-0242	Bevel Washer, .340 x .872 x .060
36	936-0272	Washer, .510 x 1.00 x .125
37	680-00322	Deck Rod Assembly
38	936-0326	Washer, .510 x 1.00 x .125
39	948-3051	Hex Flange Bearing
40	703-09695	Flat Washer, .531 x 2.125 x .250
41	736-04602	Washer, .640 x 1.25 x .050
42	750-05468	Spacer, 1.27 x 1.75 x .375
43	738-04222	Shoulder Screw, .437 x .50, 1/4-20
44	738-1127B	Shoulder Screw, .625 x .442, 3/8-16
45	710-3067	Hex Cap Screw, 1/2-13 x 1.75
46	711-05072	Front Lift Link Shaft, Threaded
47	712-04150	Nut, 1/2-13, Flangelock

Engine Accessories (Kohler)

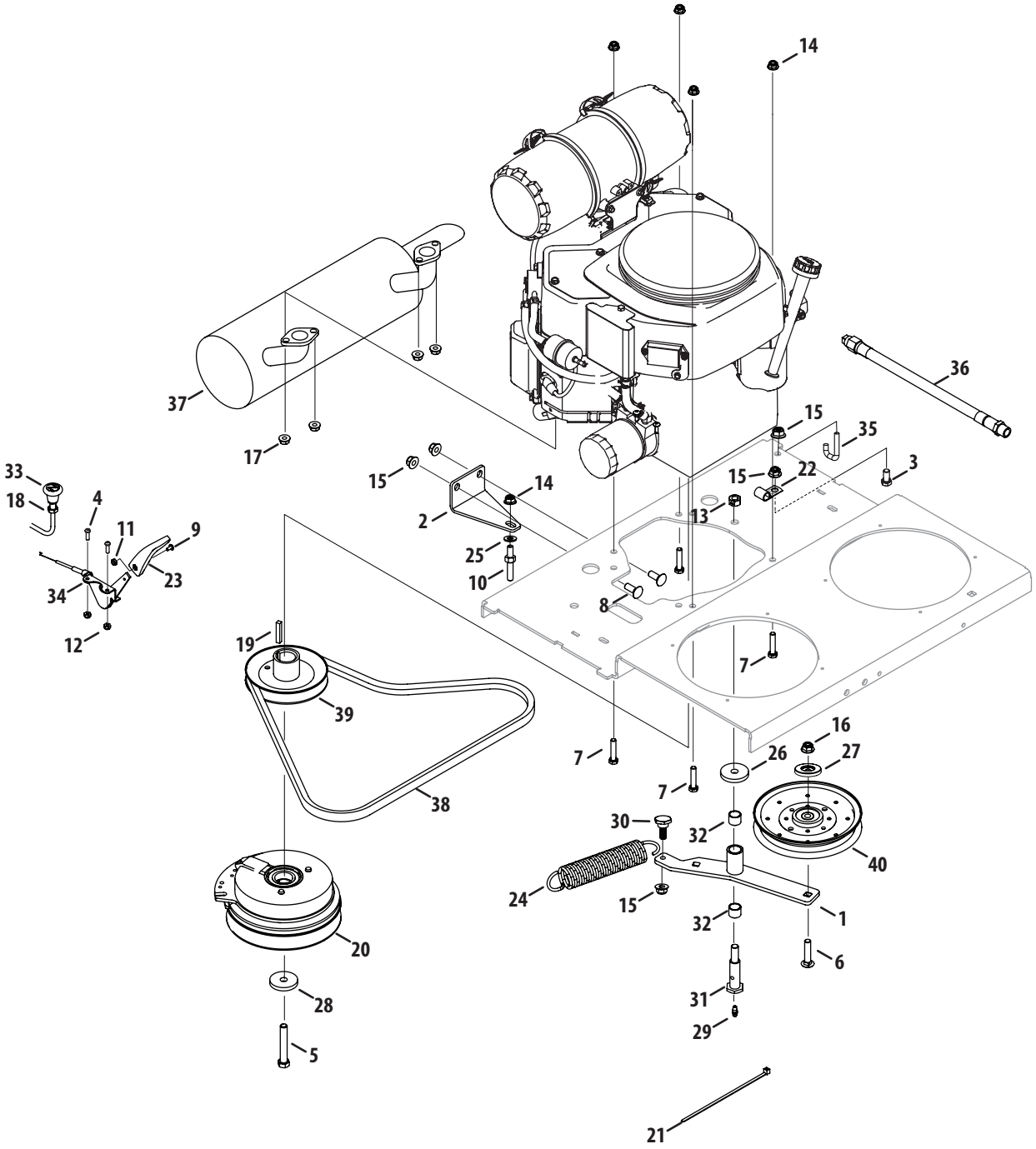

Ref.	Part Number	Description
1	680-00227A	Idler Bracket
2	703-08607	Clutch Retainer Bracket
3	710-0216	Hex Cap Screw, 3/8-16 x .75
4	710-0425	Screw, #10-24 x .625
5	710-04377	Hex Cap Screw, 7/16-20 x 2.75
6	710-05376	Carriage Bolt, 3/8-16 x 1.00
7	710-0805A	Hex Cap Screw, 5/16-18 x 1.50
8	710-3168	Carriage Bolt, 3/8-16 x 1.00
9	710-3217	Screw, #8-32 x .375
10	711-1637	Stud, Pivot Ball Joint
11	712-0142	Nut, #8-32, Hex
12	712-0161	Nut, #10-24, Hexlock
13	712-0290	Nut, 7/16-14, Hexlock
14	712-04063	Nut, 5/16-18, Flangelock
15	712-04065	Nut, 3/8-16, Flangelock
16	912-0431	Nut, 3/8-16, Flangelock
17	712-04312	Nut, M8-1.25, Hexlock
18	712-0711	Jam Nut, 3/8-24
19	714-0118	Key, 1/4 x 1.50
20	917-04967	Electric PTO Clutch
21	725-0157	Cable Tie
22	726-04124	Clip, .407 x 1.80
23	731-04914	Throttle Control Knob
24	732-04915A	Extension Spring, 1.5 x 7.5
25	936-0275	Washer, .344 x .688 x .065
26	736-3017	Washer, .471 x 1.50 x .225
27	721-04516	Pulley Cap
28	736-3082A	Washer, .471 x 1.50 x .225
29	937-0146	Grease Fitting
30	738-1126	Shoulder Screw, .625 x .302, 3/8-16
31	738-3102	Shoulder Bolt, .625 x 1.947, 7/16-14
32	741-04555	bearing, .638 x .753 x .615
33	946-04812	Choke Control Cable
34	946-04840	Throttle Cable
35	747-05707	Transmission Spring Hook
36	751-10291A	Oil Drain Hose
37	751-12519	Muffler
38	954-04320	Belt
39	756-04480A	Drive Pulley
40	756-04487	Idler Pulley

60" Deck

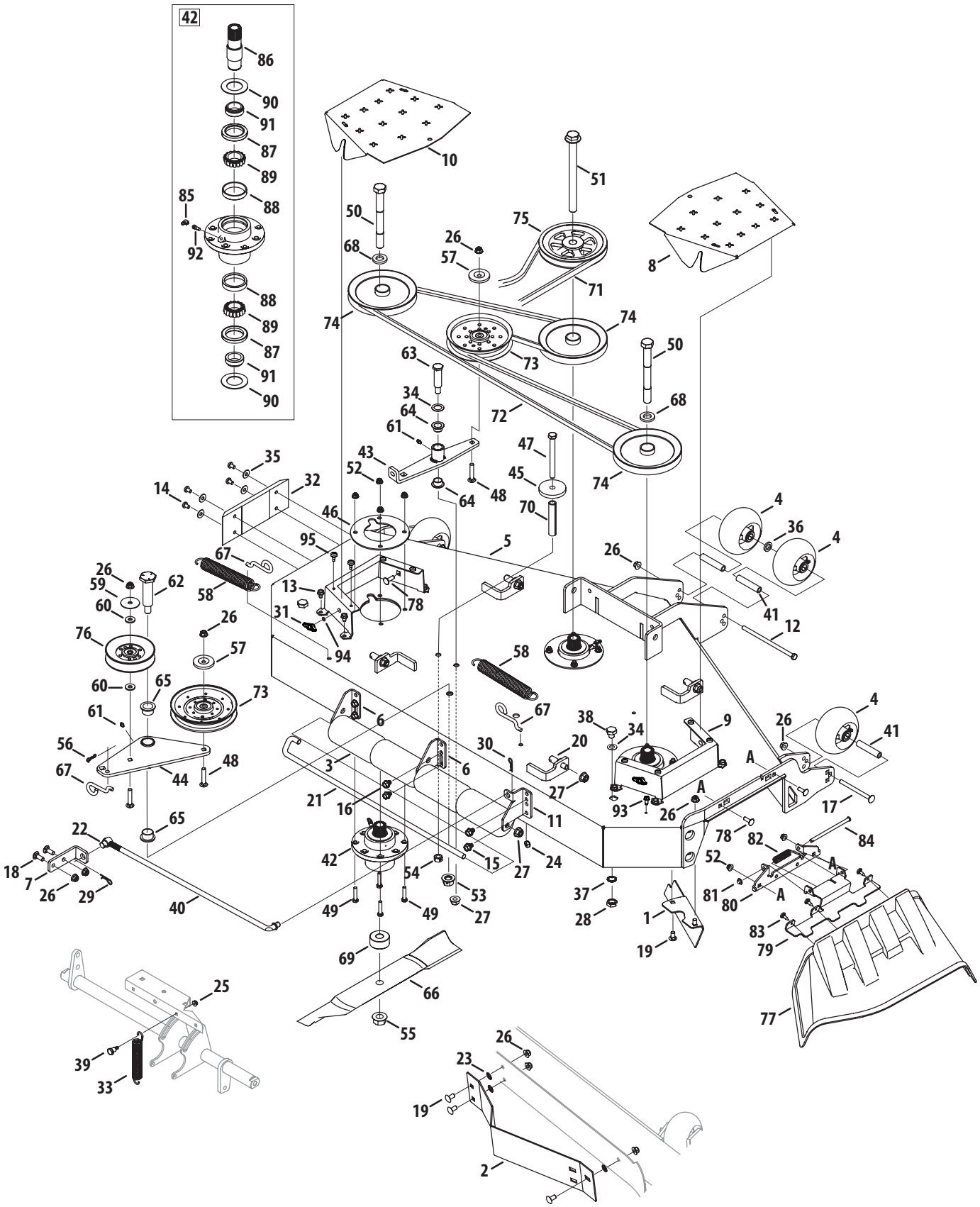
42
86
90
91
87
89
88
85
92
88
89
87
91
90
10
51
50
75
26
57
68
71
8
74
74
73
50
63
34
64
61
72
68
47
43
52
45
74
35
32
14
64
48
70
46
4
36
4
95
5
26
67
26
59
62
58
13
78
60
31
41
12
76
26
57
94
58
60
65
73
61
6
67
38
34
9
26
4
41
56
30
20
3
6
A
67
44
48
27
21
16
93
26
A
17
11
65
22
42
15
24
78
82
84
18
7
26
29
54
27
52
A
53
37
81
80
A
40
49
49
27
28
1
83
79
19
69
25
66
77
55
26
39
23
33
19
2

Ref.	Part Number	Description
1	02005195	Chute Baffle
2	02005694	Baffle, 60" Adjustment
3	631-05115	Anti-Scalp Roller Assembly
4	634-3159	Complete Wheel, 5.00 Dia.
5	680-00329	60" Deck Assembly
6	703-09137	Rear Roller Mount Bracket
7	703-09380	Deck Stabilizer Mount Bracket
8	703-09922	Deck Belt Cover, RH
9	703-09921	Deck Belt Cover Bracket
10	703-09924	Deck Belt Cover, LH
11	703-09579	Rear Roller Bracket, RH
12	710-04692	Hex Cap Screw, 3/8-16 x 7.25
13	710-0607	Screw, 5/16-18 x .500
14	710-06156	Screw, 5/16-18 x .500
15	710-0623	Screw, 3/8-16 x .750
16	710-0773	Screw, 3/8-16 x .500
17	710-1649	Carriage Screw, 3/8-16 x 4.50
18	710-3168	Carriage Bolt, 3/8-16 x 1.00
19	710-3178	Carriage Bolt, 3/8-16 x .750
20	711-05604	Pin, 1/2-13 x .625 x 1.2
21	711-05664	J-Hook w/ Threaded Roller
22	911-0770	Ferrule
23	712-0229	Push Nut, 3/8
24	712-0266A	Jam Lock Nut, 3/8-16
25	712-04064	Nut, 1/4-20, Flangelock
26	712-04065	Nut, 3/8-16, Flangelock
27	712-04150	Nut, 1/2-13, Flangelock
28	912-0641	Hex Nut, M16-1.5
29	914-0145	Click Pin, .092 x 1.64
30	914-04023	Internal Cotter Pin
31	720-04122	Wing Knob
32	731-10336	Skid Guard Plate
33	732-04929	Extension Spring, .969 x 6.180
34	936-0287	Washer, .793 x 1.24 x .06
35	736-0371	Flat Washer, .343 x .880 x .062
36	736-04296	Flat Washer, .632 x 1.00 x .160
37	936-0760	Lock Washer, 17 x 23.8 x 1.95
38	738-04146	Plug, Screw, M16-1.5
39	738-04222	Shoulder Bolt, .437 x .50, 1/4-20
40	747-06273	Deck Support Rod, 1/2" Dia.

Ref.	Part Number	Description
41	750-3193	Wheel Spacer
42	918-05132	Spindle Assembly
43	680-00167A	Deck Idler Arm
44	680-00319	Idler Assembly
45	703-08855	Spacer, .5375 x 2.75 x .375
46	703-09434	Spindle Support Plate
47	710-0382	Hex Cap Screw, 1/2-13 x 5.00
48	710-04157	Screw, 3/8-16 x 2.00
49	710-04831A	Bolt, 5/16-18 x 1.25
50	710-05387	Hex Cap Screw, 3/4-16 x 7.00
51	710-05388	Hex Cap Screw, 3/4-16 x 9.00
52	712-04063	Nut, 5/16-18, Flangelock
53	712-04327	Nut, 5/8-18, Flangelock
54	712-3022	Nut, 1/2-13, Hexlock
55	712-3078	Nut, 3/4-16, Flangelock
56	714-04040	Bow Tie Cotter Pin
57	721-04516	Pulley Cap
58	732-04911	Extension Spring, 1.248 x 8.5
59	736-3040	Washer, .406 x 1.92 x .060
60	736-3052	Washer, .406 x 1.00 x .105
61	937-0146	Grease Fitting
62	738-05030	Shoulder Bolt, 1.0 x 3.15, 5/8-18
63	938-3110	Shoulder Bolt, .750 x 2.23, 1/2-13
64	741-0338	Flange Bearing, .75 x .52
65	741-04552	Flange Bearing, 1.00 x .75
66	942-04415	Hi-Lift Blade, 21.0
67	747-05658	Spring Rod Hook
68	750-05553	Spacer, .812 x .218
69	750-05617	Spacer, .760 x 2.00 x .925
70	750-3213	Spacer, .405 x .75 x 3.875
71	954-04296	V-Belt
72	954-04319	Deck Belt
73	756-04487	Idler Pulley
74	756-04489	Spindle Pulley
75	756-04496A	Drive Pulley
76	756-04522	Idler Pulley
77	631-05176	Discharge Chute Assembly
78	710-0276	Carriage Bolt, 5/16-18 x 1.00
79	703-09625A	Chute Bracket
80	703-09626	Chute Bracket

Continued on next page

60" Deck

Ref.	Part Number	Description
81	726-04009	Push Cap
82	732-05128A	Torsion Spring
83	738-04549A	Shoulder Screw, 1/4-20
84	747-06318	Chute Rod
85	737-3001	Grease Fitting, 45 degree, 1/4-28
86	911-05758	Spindle Shaft
87	921-0385	Seal, Oil
88	941-3050	Cup Bearing
89	941-3051	Cone Bearing
90	736-04642	Washer, 1.50 x 2.52 x .075
91	750-05695	Ring, Seal
92	737-04373	Straight Adapter Fitting
93	710-0599	Hex Flange Screw, 1/4-20 x .500
94	726-0201	Speed Nut, .3125
95	735-0271A	Bumper, .62 Dia. x .3

This page left intentionally blank.

Electrical

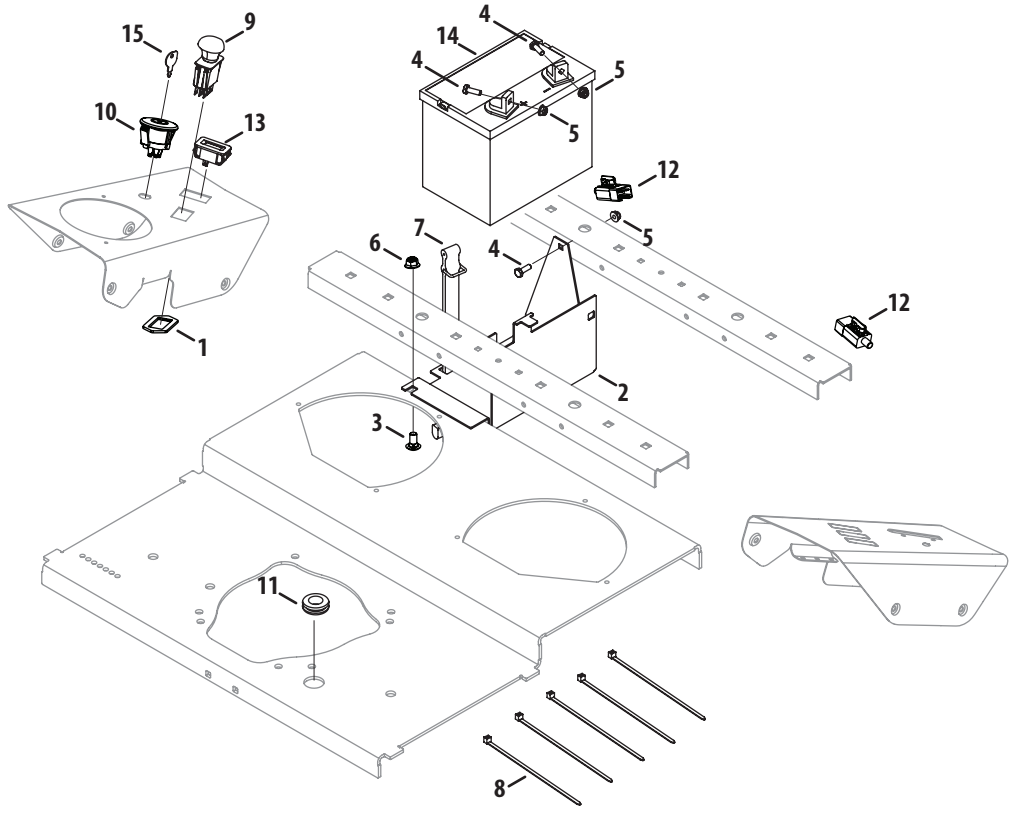

Ref.	Part Number	Description
1	01009905	PTO Switch Bracket
2	703-07855	Battery Bracket
3	710-0389	Carriage Bolt, 3/8-16 x .750
4	710-3015	Hex Cap Screw, 1/4-20 x .75
5	712-04064	Nut, 1/4-20, Flangelock
6	712-04065	Nut, 3/8-16, Flangelock
7	723-3064	Battery Strap
8	725-0157	Cable Tie
9	925-04174	Electric PTO Switch

Ref.	Part Number	Description
10	925-04228	Key Switch
11	735-04285	Rubber Grommet, .75 x 1.062 x .50
12	925-3164A	Plunger Switch, NO/NC
13	725-05438	Hour Meter
14	925-1707D	Battery
15	925-2054A	Key
NS	725-06220	Wire Harness
NS	929-04195	Hour Meter Harness

Electrical Schematic

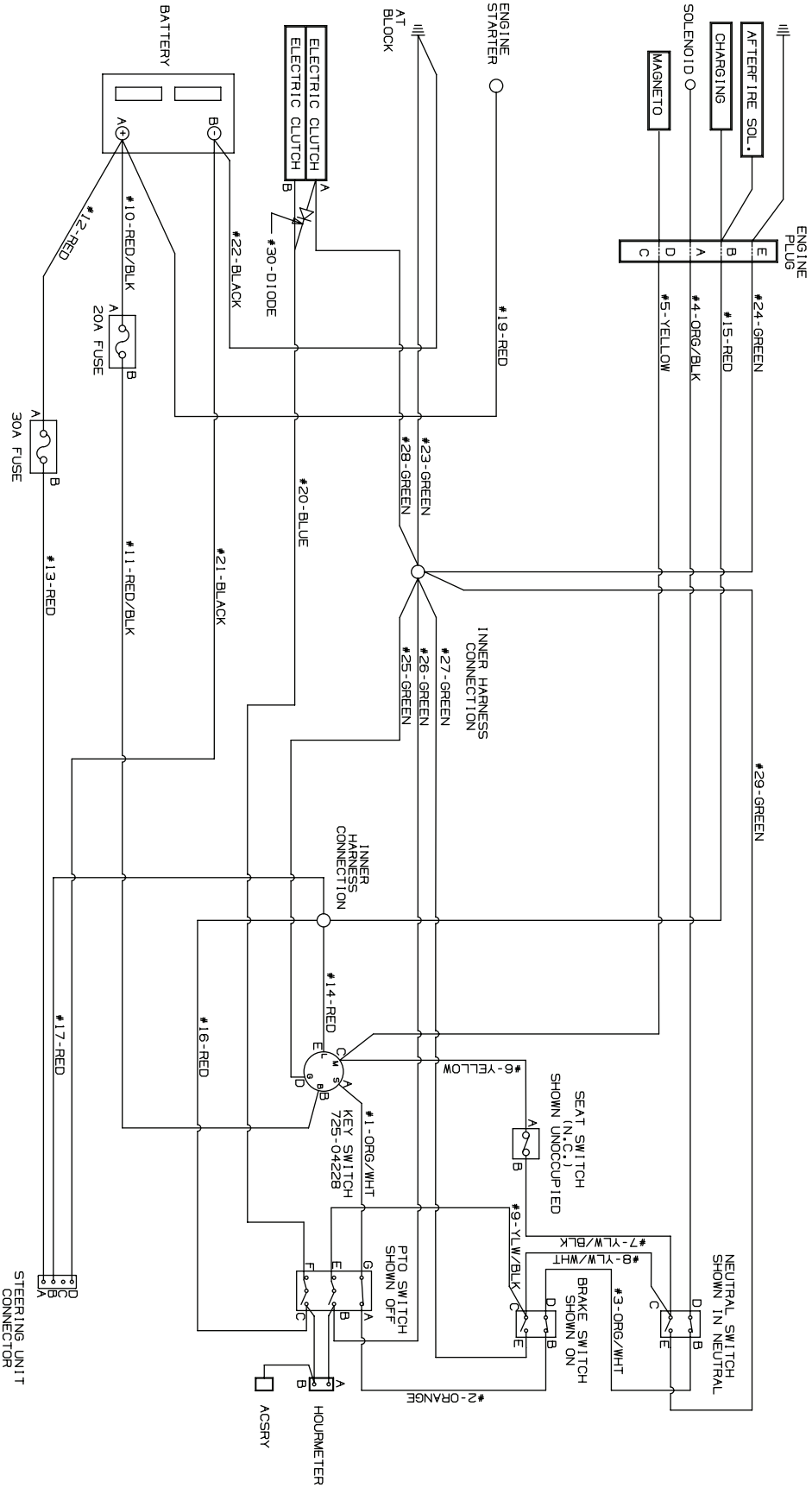

Tank LZ Labels

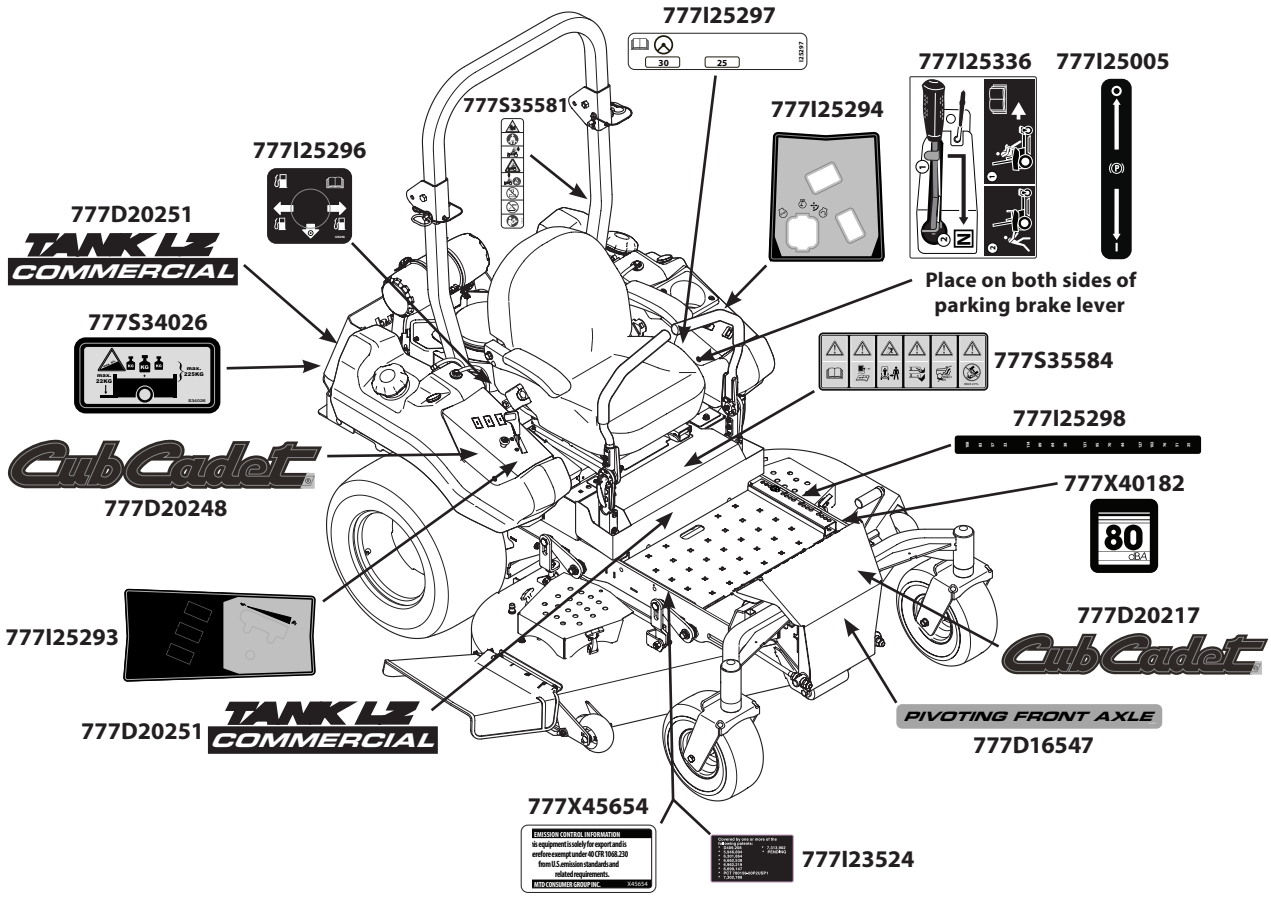

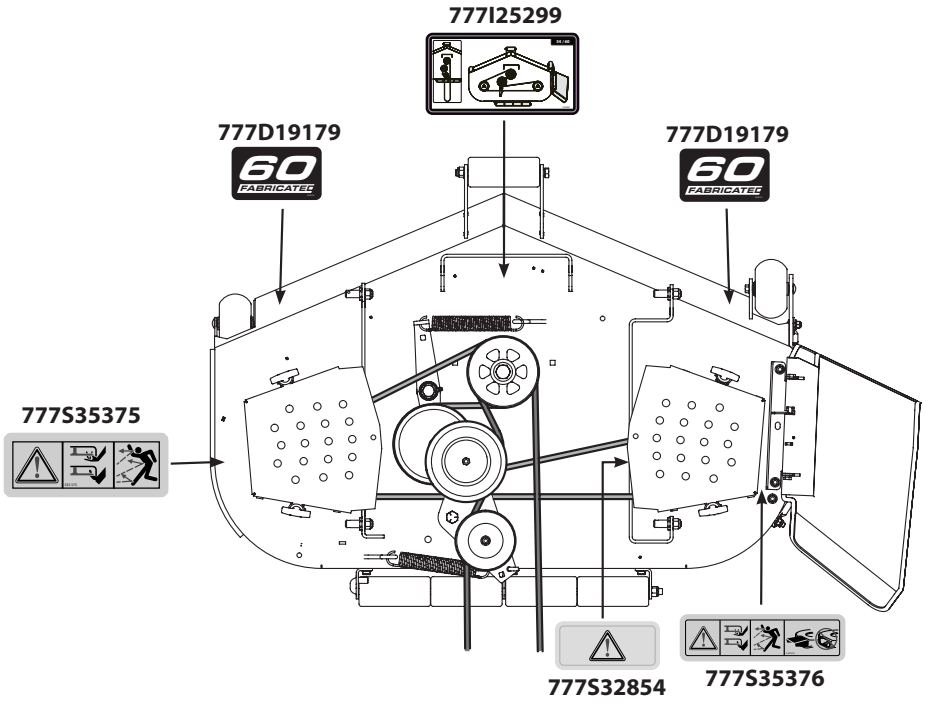

Kohler CV742-3032 Crankcase

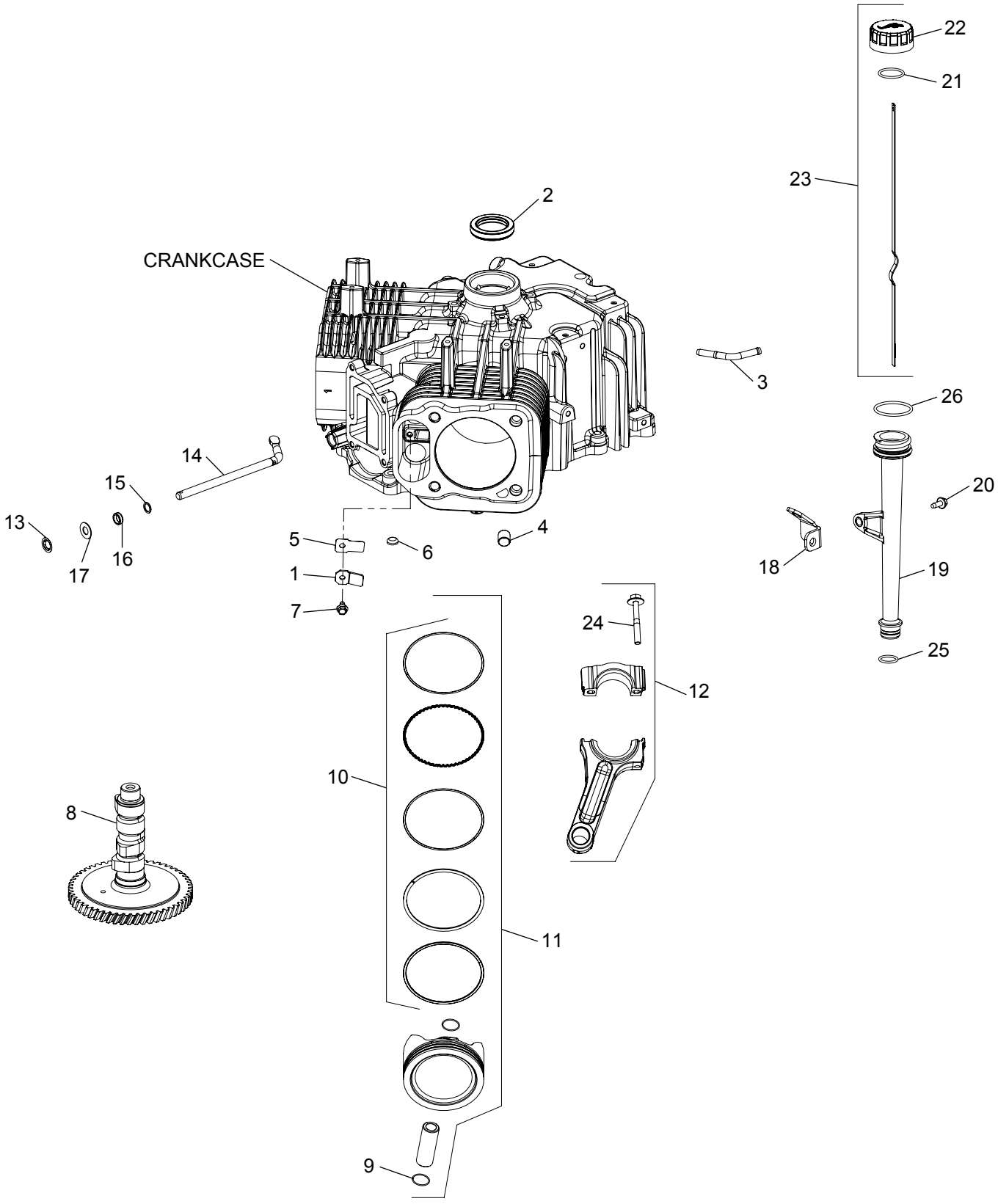

Ref.	Part Number	Description
1	KH-24-018-04-S	Breather Reed Retainer
2	KH-24-032-19-S	Oil Seal
3	KH-24-294-13	Fitting
4	KH-24-380-16-S	Locating Pin
5	KH-24-402-05-S	Breather Reed
6	KH-52-139-09-S	Cup Plug
7	KH-M-0545010	Flange Screw, M5 x 0.8 x 10
8	KH-24-012-29-S	Camshaft Kit
9	KH-24-018-01-S	Piston Pin Retainer
10	KH-25-108-01-S	Piston Ring Set (STD)
—	KH-25-108-02-S	Piston Ring Set (.08)
—	KH-25-108-03-S	Piston Ring Set (.25)
—	KH-25-108-04-S	Piston Ring Set (.50)
11	KH-25-874-14-S	Piston Kit w/ Ring (STD) (Inc. 9 & 10)
—	KH-25-874-18-S	Piston Kit w/ Ring (.08)
—	KH-25-874-19-S	Piston Kit w/ Ring (.25)
—	KH-25-874-20-S	Piston Kit w/ Ring (.50)
12	KH-24-067-34-S	Connecting Rod Kit (Inc. 24)
13	KH-24-018-09-S	Ring Retainer
14	KH-24-144-38-S	Governor Cross Shaft
15	KH-24-468-15-S	Flat Washer, 11/32”
16	KH-28-032-09-S	Governor Cross Shaft Seal
17	KH-M-931010-S	Flat Washer, 9 mm
18	KH-24-126-243-S	Oil Fill Tube Bracket
19	KH-32-755-04-S	Oil Fill Assembly Tube
20	KH-M-545013-S	Flange Screw, M5 x 0.8 x 13
21	KH-25-153-02-S	Dipstick O-Ring
22	KH-24-755-46	Oil Fill Cap Kit (Yellow)
23	KH-24-038-04-S	Dipstick, Assembly (Inc. 21 & 22)
24	KH-25-086-452-S	Connecting Rod Bolts Kit
25	KH-12-153-01-S	Lower Oil Fill Tube O-Ring
26	KH-12-153-02-S	Upper Oil Fill Tube O-Ring

Kohler CV742-3032 Crankshaft

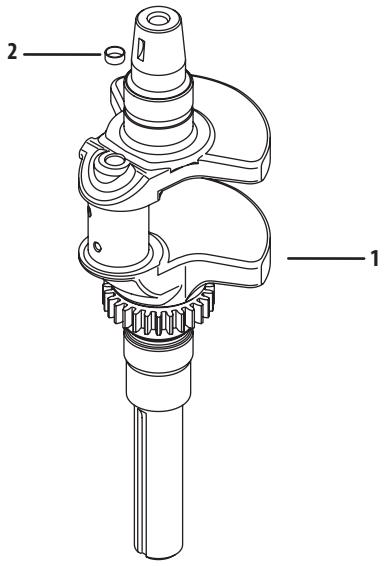

Ref.	Part Number	Description
1	KH-24-014-203-S	Crankshaft
2	KH-52-139-09-S	Cup Plug

Kohler CV742-3032 Oil Pan/Lubrication

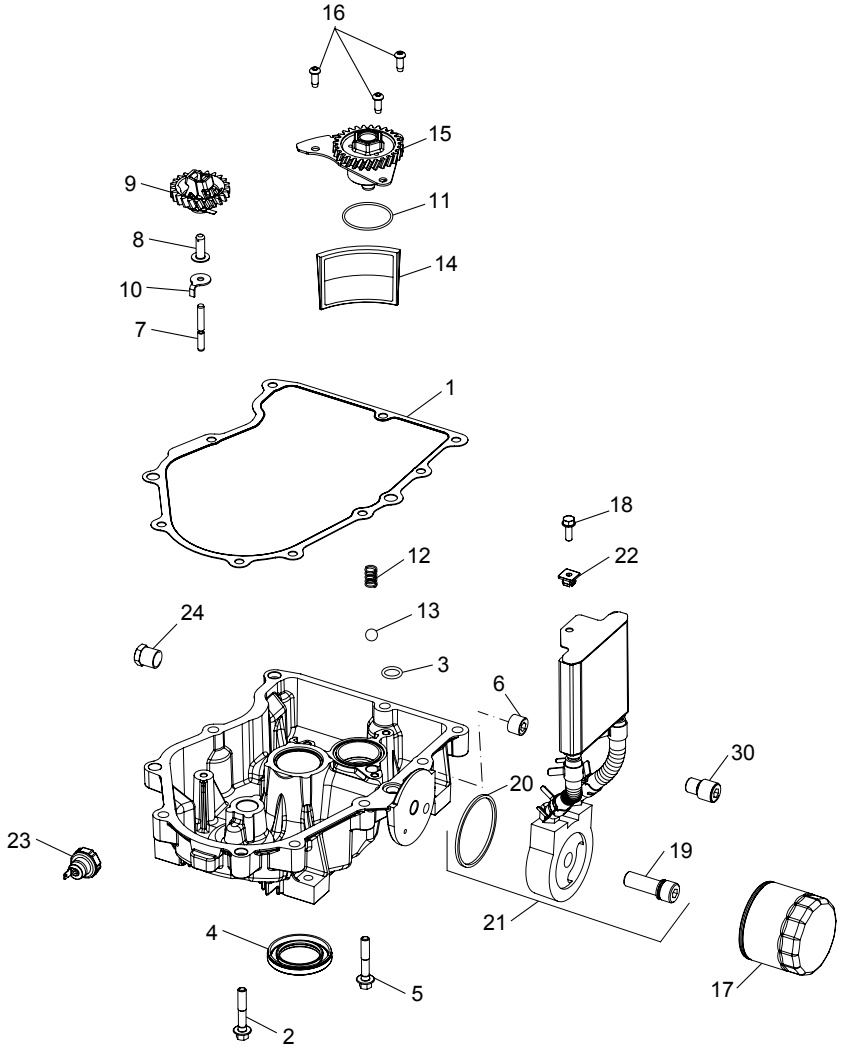

Ref.	Part Number	Description
1	KH-24-041-66-S	Oil Pan Gasket
2	KH-24-086-17-S	Flange Screw, M8 x 1.25 x .45
3	KH-24-153-08-S	O-Ring
4	KH-25-032-06-S	Oil Seal
5	KH-25-086-17-S	Screw
6	KH-25-139-62-S	Countersink Pipe Plug, ⅜
7	KH-12-144-02	Governor Gear Shaft
8	KH-12-380-01	Governor Regulating Pin
9	KH-24-043-12	Governor Gear Kit w/Pin
10	KH-24-448-02-S	Locking Tab
11	KH-12-153-05	O-Ring (1.78" Dia.)
12	KH-24-089-74-S	Compression Spring
13	KH-25-194-03-S	Pressure Relief Ball

Ref.	Part Number	Description
14	KH-32-162-06-S	Oil Screen
15	KH-24-393-71-S	Oil Pump Assembly
16	KH-25-086-414-S	Button Head Screw
17	KH-12-050-01-S	Oil Filter
18	KH-24-086-12	Tap Screw, M6 x 1.7 x 18
19	KH-24-136-05-S	Oil Filter Nipple
20	KH-24-153-21-S	Oil Cooler O-Ring
21	KH-54-755-21-S	Oil Cooler Kit (Inc. 19 & 20)
22	KH-25-100-37-S	Plastic Nut (Black)
23	KH-25-099-27-S	Oil Pressure Switch
24	KH-52-139-02	Pipe Plug, 3/8
N/A	KH-24-199-35-S	Oil Pan Assembly Kit (Not Shown)

Kohler CV742-3032 Head/Valve/Breather

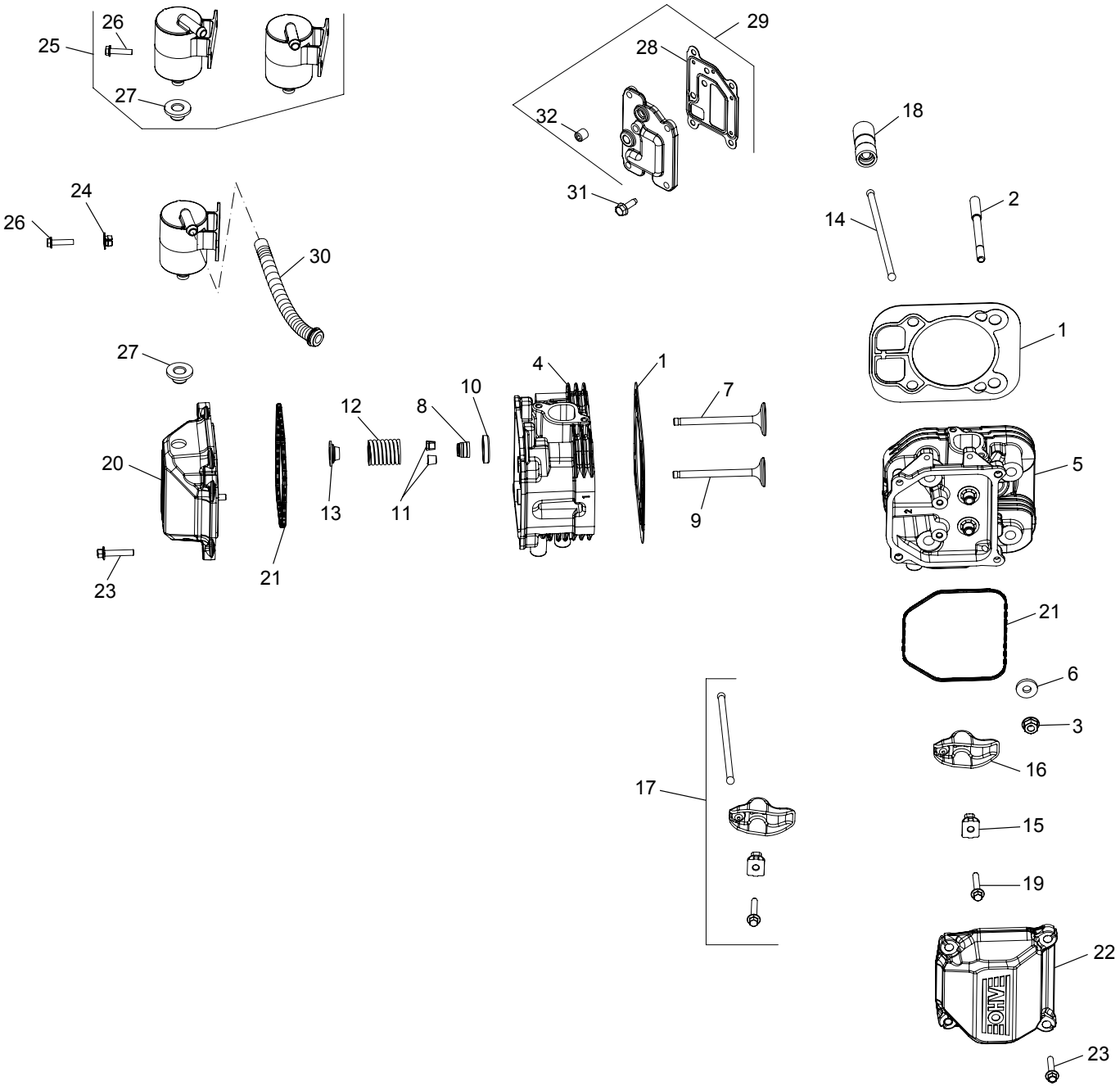

Ref.	Part Number	Description
1	KH-24-841-04-S	Cylinder Head Gasket Kit (Inc. Head Mounting Hardware)
2	KH-24-072-09-S	Stud, M8 x 1.25
3	KH-24-100-10-S	Flange Nut, M8 x 1.25
4	KH-24-318-155-S	#1 Cylinder Head Assembly Kit
5	KH-24-318-156-S	#2 Cylinder Head Assembly Kit
6	KH-24-468-16-S	Flat Washer, 8.6 mm
7	KH-24-017-01	Intake Valve (STD)
—	KH-24-017-02	Intake Valve (.25)
8	KH-25-032-14-S	Valve Band Seal
9	KH-24-016-01	Exhaust Valve (STD)
—	KH-24-016-02	Exhaust Valve (.25)
10	KH-235011-S	Spring Retainer
11	KH-12-755-03	Retainer Kit
12	KH-24-089-02	Valve Spring
13	KH-25-173-28-S	Valve Spring Cap
14	KH-24-411-05	Push Rod
15	KH-24-599-02-S	Rocker Arm Pivot
16	KH-25-186-01	Rocker Arm
17	KH-24-755-66	Valve Train Kit
18	KH-25-351-11-S	Hydraulic Valve Lifter Kit
19	KH-M-640034-S	Flange Screw, M6 x 1.0 x 34
20	KH-24-755-142-S	Valve Cover Kit
21	KH-24-153-30-S	Valve Cover O-Ring
22	KH-24-755-141-S	Plain Rocker Cover Kit
23	KH-M-651030-S	Flange Screw, M6 x 1.0 x 30
24	KH-24-100-02-S	Plastic Nut
25	KH-24-755-241-S	Breather Separator Kit (Inc. 26-27)
26	KH-25-086-157-S	Hi-Lo Hex Flange Screw
27	KH-25-313-05-S	Rubber Grommet
28	KH-24-041-67-S	Breather Gasket
29	KH-24-033-03	Breather Cover Kit w/ Gskt. (Inc. 28 & 32)
30	KH-24-326-124-S	Breather Hose
31	KH-25-086-396-S	Flange Screw, M6 x 1.0 x 20
32	KH-25-139-60-S	Pipe Plug, 1/8

Kohler CV742-3032 Ignition/Electrical

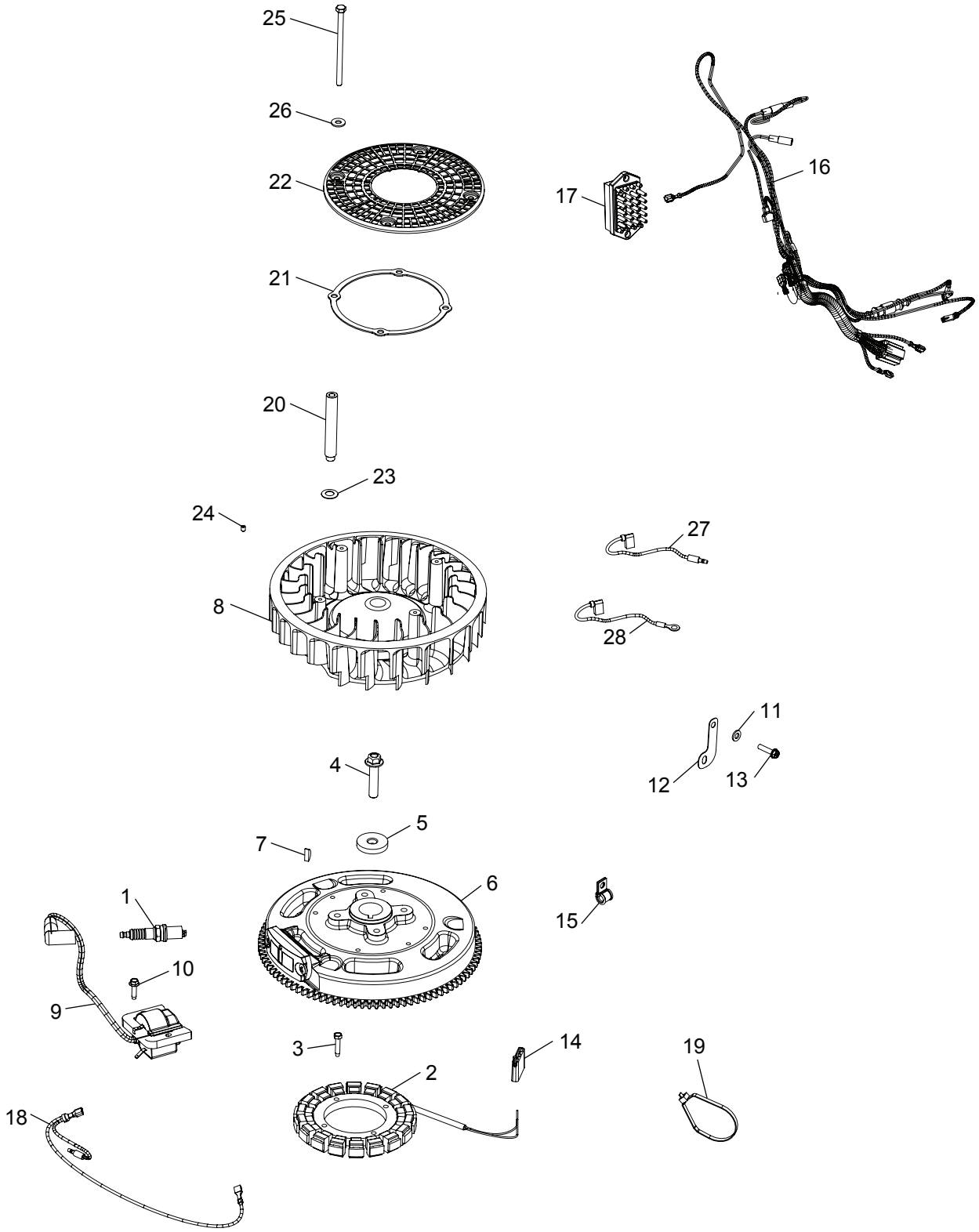

Ref.	Part Number	Description
1	KH-25-132-14-S	Spark Plug
2	KH-237878	15 Amp Stator Kit
3	KH-25-086-402-S	Thread Forming Screw
4	KH-25-086-361-S	Flange Screw, M10 x 1.5 x 45
5	KH-12-468-03	Flat Washer, 13/32"
6	KH-24-025-58-S	Flywheel
7	KH-X-42-15	Key, 3/16 x 5/8
8	KH-24-157-12-S	Fan
9	KH-24-584-93-S	Ignition Module
10	KH-25-086-473-S	Thread Forming Screw
11	KH-X-25-63	Flat Washer, 1/4
12	KH-24-126-137-S	Ground Strap Bracket
13	KH-25-086-157-S	Hi-Lo Hex Flange Screw
14	KH-25-155-41-S	Connector
15	KH-210281-S	Clip
16	KH-24-176-150-S	Wiring Harness
17	KH-25-403-21-S	Rectifier Regulator
18	KH-24-176-41-S	Duplex Lead
19	KH-25-454-07-S	Tie
20	KH-24-112-14	Spacer
21	N/A	Support Ring
22	KH-24-162-41-S	Grass Screen
23	KH-24-468-11	Spring Washer, 10 mm
24	KH-25-086-43	Set Screw, #10-24 x 1/4
25	KH-M-603100	Cap Screw, M6 x 1.0 x 99.5
26	KH-X-25-53	Flat Washer, 1/4
27	N/A	Oil Sentry Lead
28	KH-25-518-34-S	Lead

Kohler CV742-3032 Blower Housing & Baffles

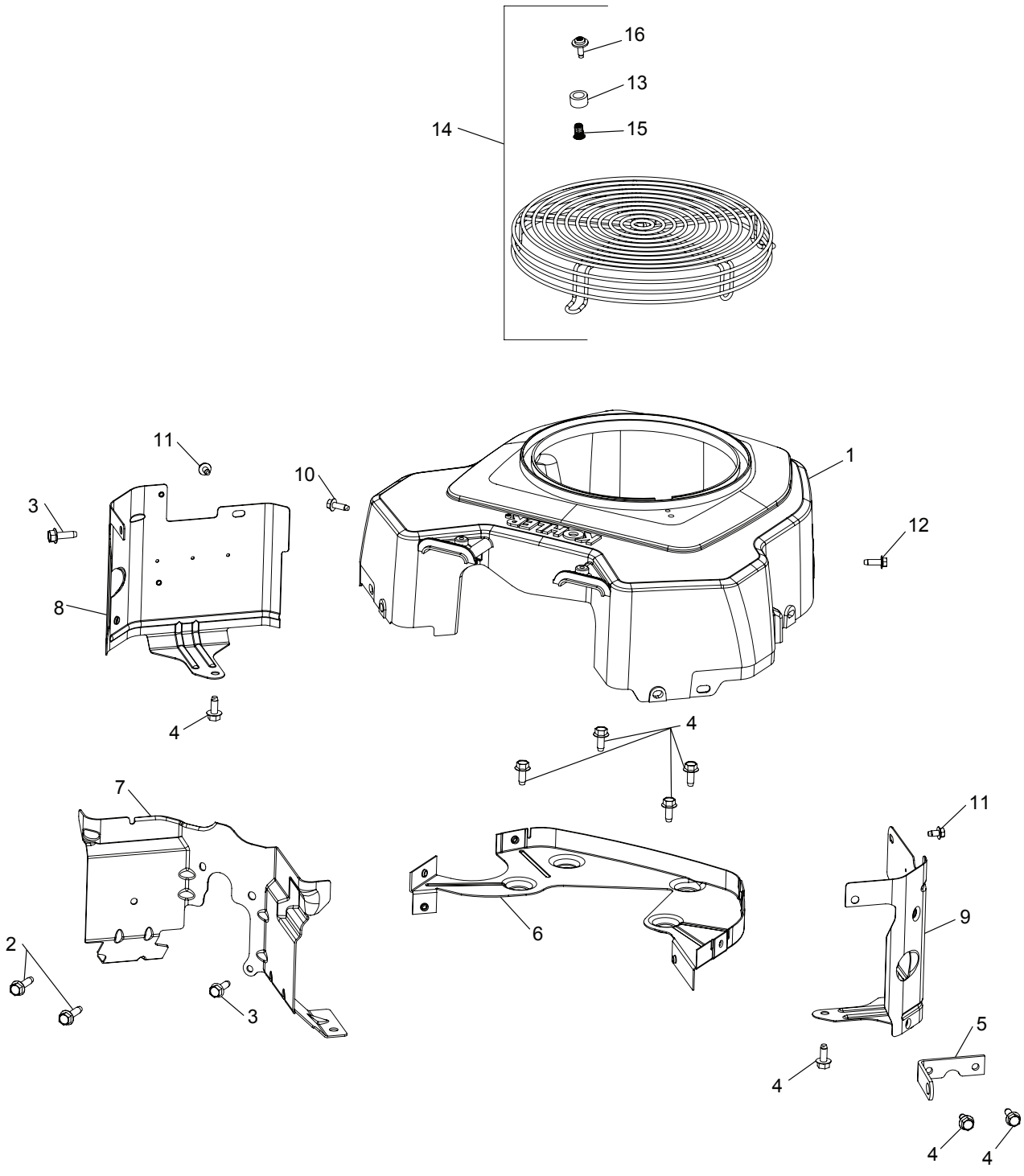

Kohler CV742-3032 Blower Housing & Baffles

Ref.	Part Number	Description
1	KH-24-027-428-S	Blower Housing
2	KH-25-086-395-S	Thread Forming Screw
3	KH-25-086-396-S	Thread Forming Screw
4	KH-25-086-397-S	Thread Forming Screw
5	KH-25-445-03-S	Lift Strap
6	KH-24-146-59-S	Backing Plate Kit
7	KH-24-063-108-S	Baffle
8	KH-24-063-85-S	Cylinder Barrel Kit, #1 Side
9	KH-24-063-88-S	Cylinder Baffle Kit, #2 Side
10	KH-25-086-398-S	Thread Forming Screw
11	KH-25-086-400-S	Thread Forming Screw
12	KH-25-086-426-S	Thread Forming Screw
13	KH-24-112-09-S	Spacer
14	KH-24-755-94-S	Guard Kit (Inc. 13, 15-16)
15	KH-24-332-01-S	Threaded Insert
16	KH-25-086-160-S	Sems Screw

Kohler CV742-3032 Starting System

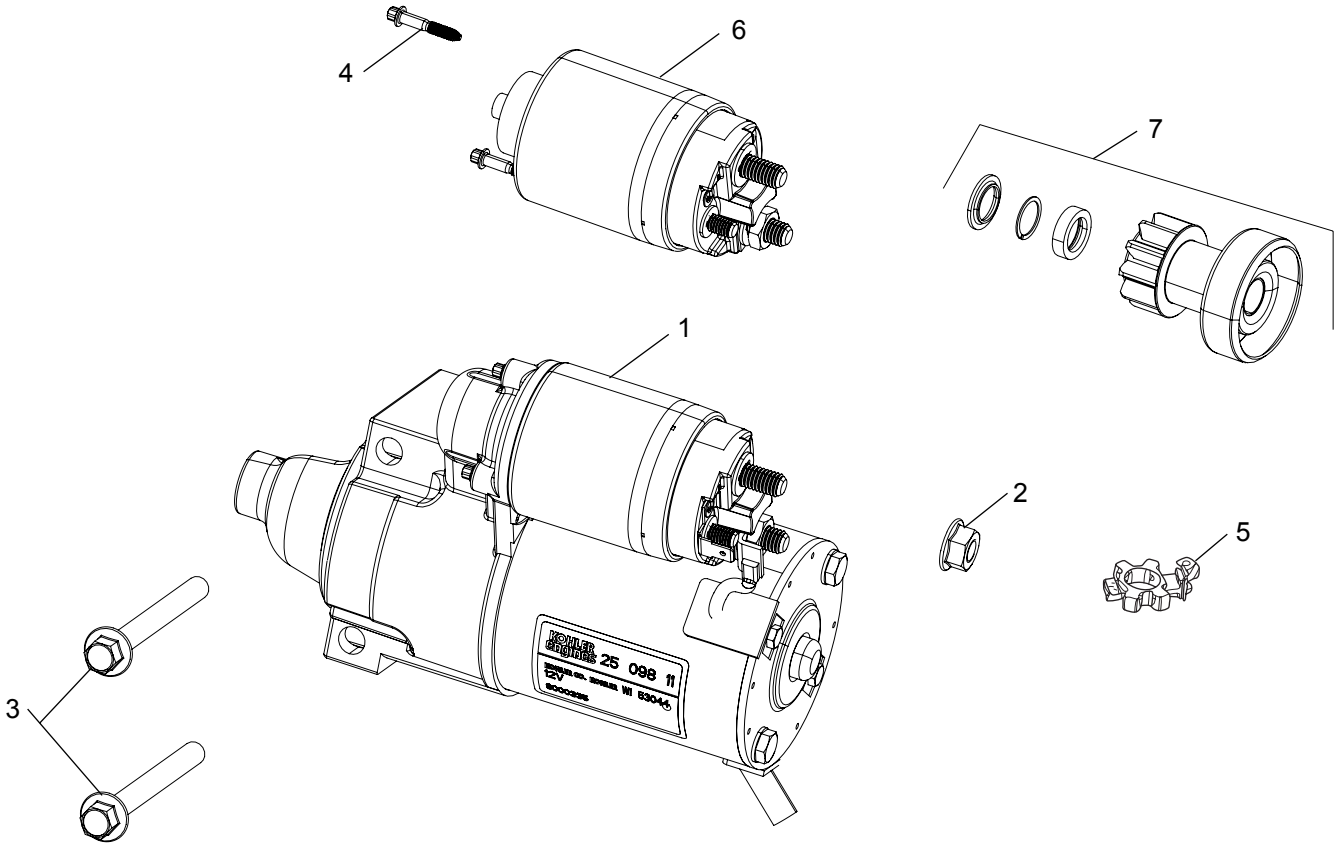

Ref.	Part Number	Description
1	KH-25-098-11-S	Solenoid Shift Starter Assembly
2	712-3086	Flange Nut, M8x1.25
3	KH-M-851080-S	Flange Screw, M8 x 1.25 x 80
4	KH-25-086-113-S	Torx Head Screw
5	KH-25-221-01-S	Brush Holder Kit
6	KH-25-435-06-S	Solenoid Kit (Inc. 4)
7	KH-25-755-33-S	Starter Pinion Kit

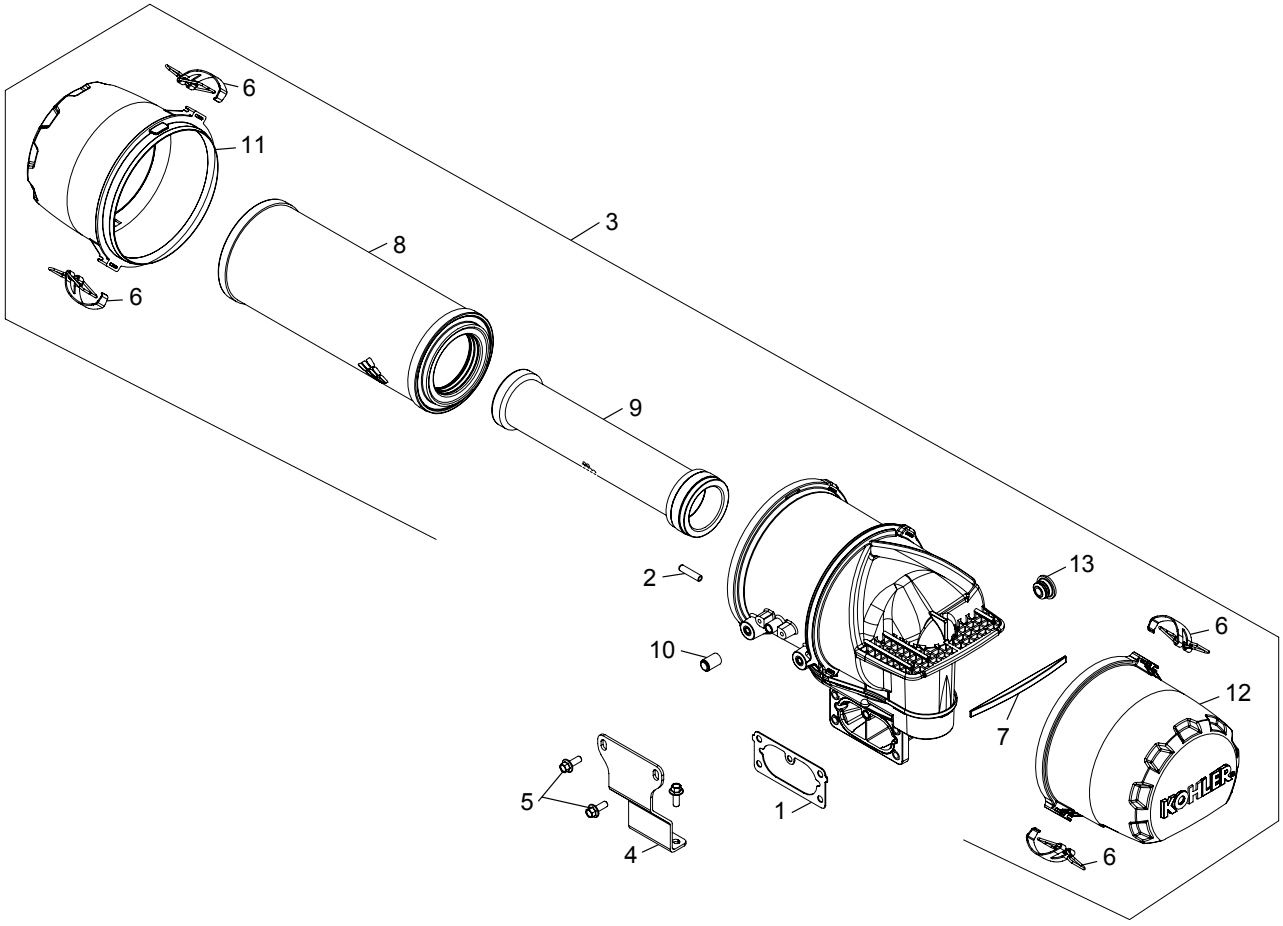

Ref.	Part Number	Description
1	KH-24-041-70-S	Air Cleaner Gasket
2	KH-25-173-34-S	Masking Cap
3	KH-24-048-51-S	Air Cleaner Kit
4	KH-24-126-218-S	Support Bracket
5	KH-M-639016-S	Flange Screw, M6 x 1.0 x 16
6	KH-62-154-07-S	Assembly Clip
7	KH-62-263-03-S	Foam Insert Damper
8	KH-25-083-01-S	Element, Air Filter - PRIMARY
9	KH-25-083-04-S	Element, Air Filter - SAFETY
10	KH-25-173-37-S	Masking Cap
11	KH-62-096-22-S	Air Filter Cover
12	KH-62-096-25-S	Rain Cap Cover
13	KH-62-139-02-S	Hole Plug

Kohler CV742-3032 Engine Controls

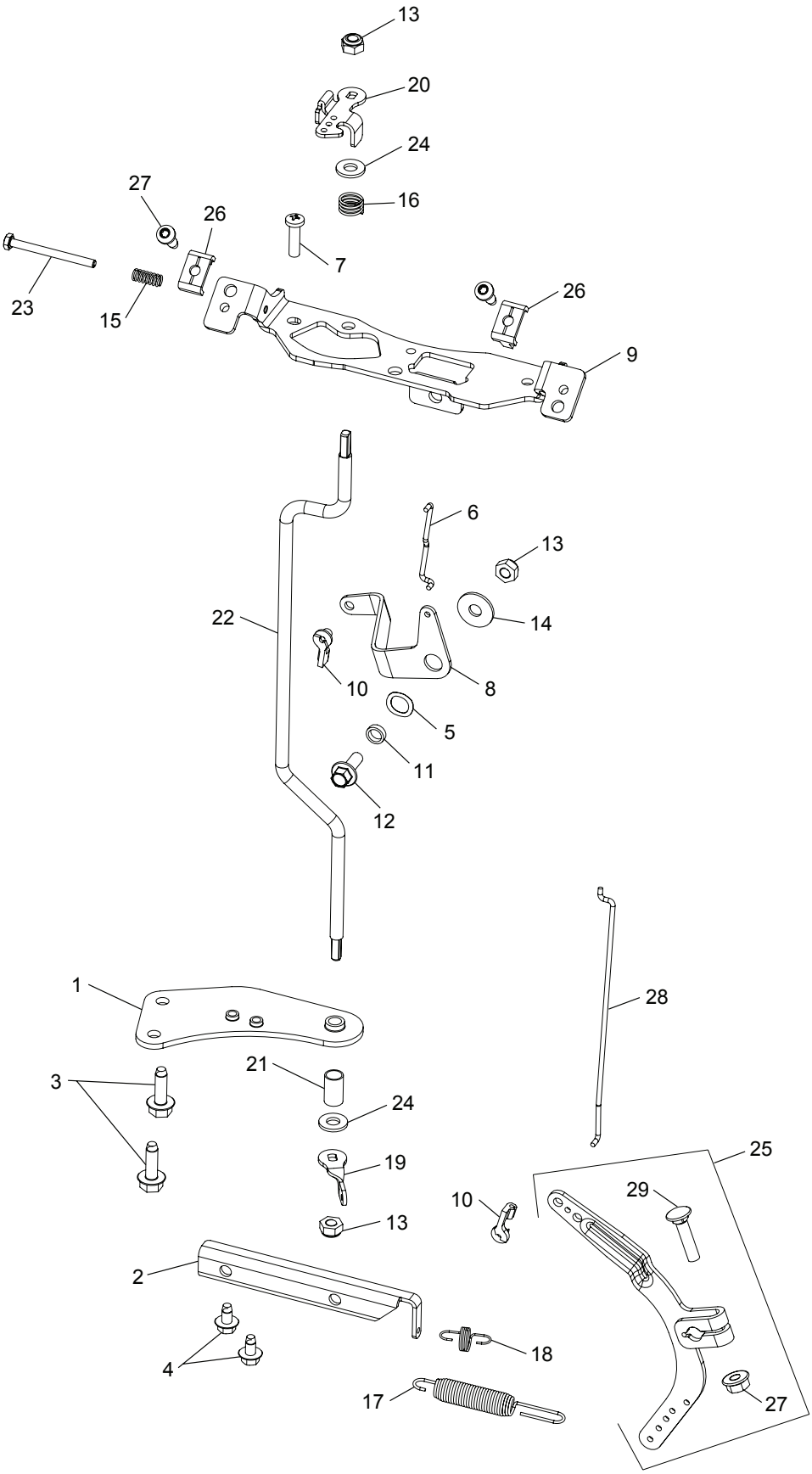

Ref.	Part Number	Description
1	KH-24-126-162-S	Throttle Shaft Bracket
2	KH-24-126-163-S	Governed Idle Bracket
3	KH-25-086-396-S	Thread Forming Screw
4	KH-25-086-400-S	Thread Forming Screw
5	KH-277341	Spring Washer, 3/8
6	KH-24-079-53-S	Choke Linkage
7	KH-24-086-06	Screw, 11-16 x 3/4
8	KH-24-090-50-S	Choke Lever
9	KH-24-126-231-S	Control Bracket
10	KH-25-158-11	Throttle Linkage Bushing
11	KH-25-431-01-S	Spacer
12	KH-M-639016-S	Flange Screw, M6 x 1.0 x 16
13	N/A	Lock Nut, M6 x 1.0
14	736-0173	Flat Washer, 1/4
15	KH-25-086-297-S	Speed Control Spring
16	KH-24-089-20	Throttle Shaft Spring
17	KH-24-089-47-S	Governor Spring
18	KH-24-089-68-S	Governed Idle Spring
19	KH-24-090-12	Throttle Control Lever
20	KH-24-090-71-S	Throttle Control Lever
21	KH-24-112-10	Spacer
22	KH-24-144-37-S	Control Shaft
23	KH-25-086-428-S	Hex Head Screw
24	KH-X-25-72	Flat Washer, 1/4
25	KH-24-090-69-S	Governor Lever
26	KH-25-237-41-S	Cable Clamp
27	KH-M-641060-S	Flange Nut, M6 x 1.0
28	KH-24-079-42-S	Throttle Linkage
29	KH-24-211-03-S	Bolt, M6 x 1.0 x 25
N/A	KH-25-086-398-S	Thread Forming Screw

Kohler CV742-3032 Fuel System

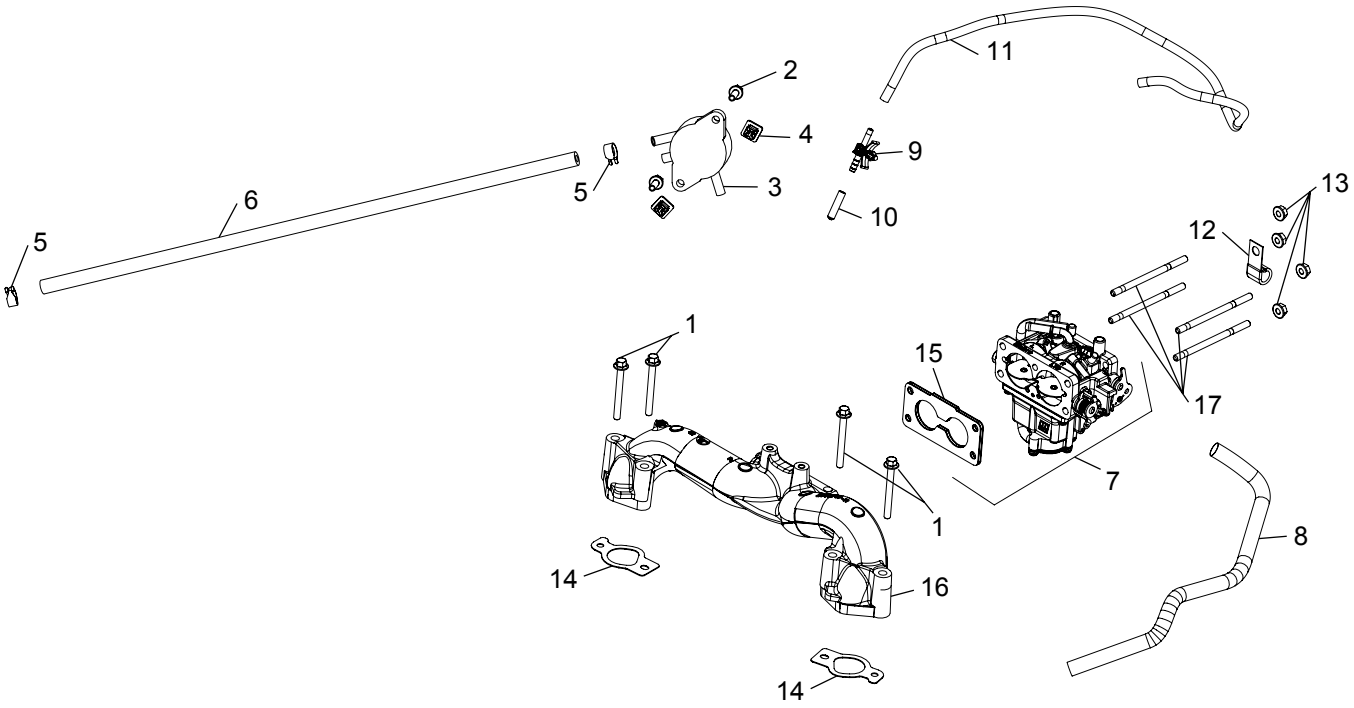

Ref.	Part Number	Description
1	KH-25-086-84-S	Flange Screw, M6 x 1.0 x 55
2	KH-24-086-12	Tap Screw, M6 x 1.7 x 18
3	KH-24-393-16	Fuel Pump
4	KH-25-100-37-S	Plastic Nut
5	KH-25-237-31-S	Hose Clamp
6	KH-25-111-81-S	Fuel Line, 24"
7	KH-24-853-227-S	Carburator Kit
8	KH-25-431-22-S	Anti-Abrasion Sleeve
9	KH-25-155-51-S	Evaporative Connector

Ref.	Part Number	Description
10	KH-25-173-33-S	Masking Cap
11	KH-25-326-28-S	Evaporative Hose
12	KH-47-154-01-S	Cable Clip
13	KH-M-641060-S	Flange Nut, M6 x 1.0
14	KH-24-041-79-S	Intake Manifold Gasket
15	KH-24-041-83-S	Carburetor Gasket
16	KH-24-164-138-S	Intake Manifold
17	KH-M-629095-S	Stud, M6 x 1.0 x 96
N/A	KH-25-050-22-S1	Fuel Filter

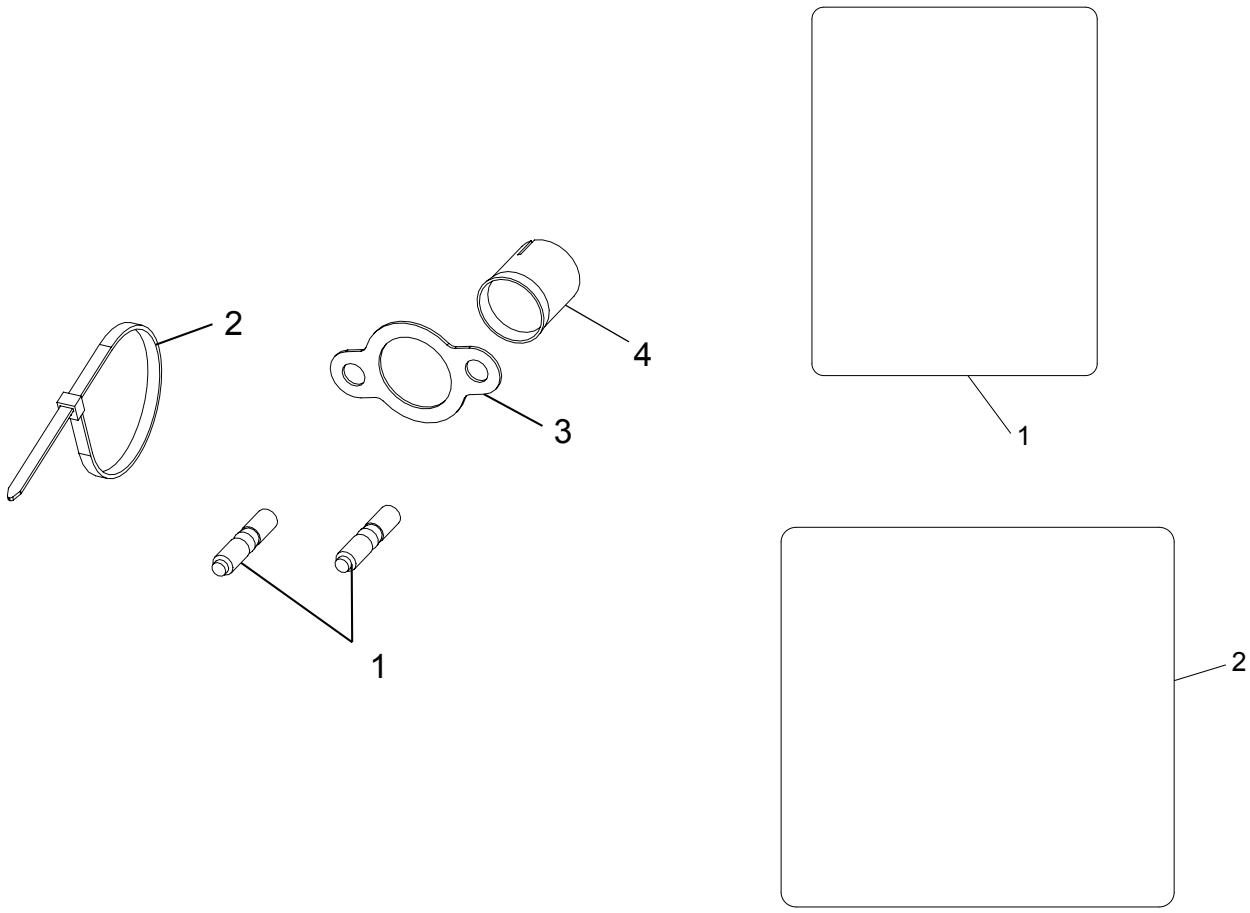

Ref.	Part Number	Description
1	KH-25-072-24-S	Stud, M8 X 1.25 X 33
2	KH-25-454-05-S	Tie
3	KH-24-041-49-S	Exhaust Gasket
4	KH-24-605-07-S	Exhaust Port Liner

Ref.	Part Number	Description
1	KH-25-113-70-S	Clear Laminate Decal
2	KH-24-113-360-S	HDAC 747cc/CV-CH742 Decal

Notes



To order replacement parts, call a Customer Support Representative at (800) 965-4CUB.
Locate your nearest Cub Cadet dealer at (877) 282-8684
or visit www.cubcadet.com to find the nearest Cub Cadet dealer in your area.

CUB CADET LLC, P.O. BOX 361131 CLEVELAND, OHIO 44136-0019