Cub Cadet COMMERCIAL

Hydrostatic Zero-Turn Riding Mower

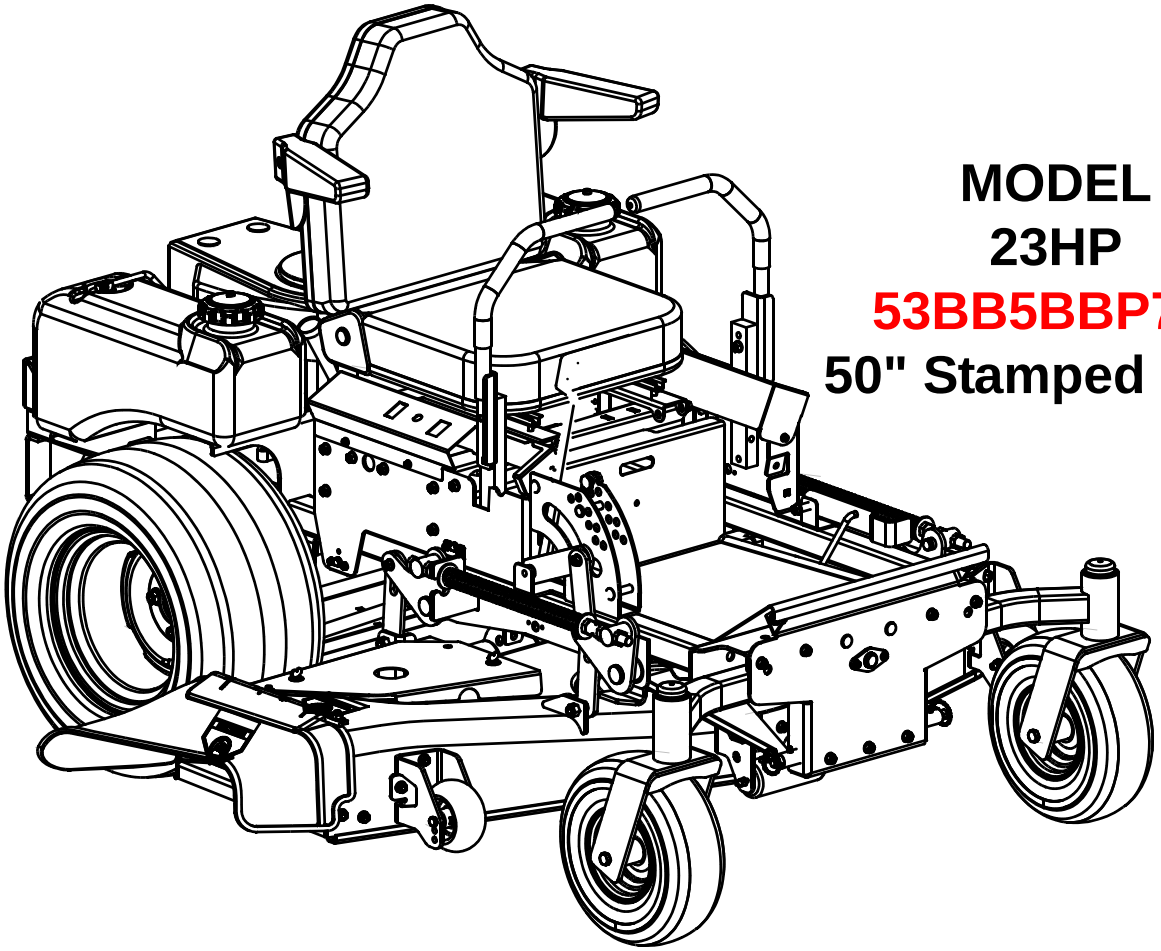

MODEL
23HP
53BB5BBP750
50" Stamped Deck

OPERATOR'S AND SERVICE MANUAL

TABLE OF CONTENTS

Foreword 3
General Safety Operations 4
A. Danger 4
B. Warning 4
C. Caution 4
Safety Precautions 4
A. General 4
B. Related to Fuel 5
C. Related to Batteries 5
D. When Mowing 5
Safety Decals 7
Specifications 8
Operating Instructions 9
A. General 9
B. Controls 10
C. Initial Adjustments 12
D. Zero Turn Break-In and Operating Procedures 13
E. Mower Cutting Blades 15
Maintenance and Service 16
A. Mower Deck 16
B. Hydraulic Oil 17
C. Electrical System 18
D. Tires 20
E. Brakes 20
F. Hydraulic System 21
G. Storage 22
Maintenance Schedule 23
Performance Adjustments 25
A. High Speed Tracking Adjustment 25
B. Engine RPM Check and Adjustment 25
C. Deck Corner Ball Wheel Roller Settings 26
D. Deck Center Anti-Scalp Roller Settings 26
E Lap Bar Adjustment 26
F Deck Leveling Procedure 27
Wiring Diagram 28
Decal Map 29
Warranty

This product may be covered by one or more of the following patents:
D409,208; 5,946,894; 6,070,690

FOREWORD

The Hydrostatic Zero-Turn Riding Mower provides superb maneuverability. The machine incorporates many safety features that should be studied by all operators before use. The list of safety precautions should receive particular attention.

This manual presents all of the operating and maintenance instructions necessary to keep your mower at peak efficiency. If operated and maintained properly, your mower will give dependable service.

⚠ CAUTION:

Only thoroughly trained persons should operate and maintain this mower. This machine can cause serious injury to anyone who misuses it and does not understand its operation. For their personal safety, all operators are required to read this entire manual before operating the mower.

Hazard control and accident prevention are partially dependent upon the design and configuration of the equipment. Notwithstanding, these factors are also dependent upon the awareness, concern, prudence and proper training of the personnel involved in the operation, transport, maintenance and storage of the equipment.

⚠ WARNING

- The engine exhaust, some of its constituents, and certain vehicle components contain or emit chemicals known to the State of California to cause cancer, birth defects or other reproductive harm.
- This unit is equipped with an internal combustion engine and should not be used on or near any unimproved forest-covered, brush-covered, or grass-covered land unless the engine's exhaust system is equipped with a spark arrester meeting applicable local or state laws (if any). If a spark arrester is used, it should be maintained in effective working order by the operator.
- In the State of California, the above is required by law (Section 4442 of the California Public Resources Code). Other States may have similar laws. Federal laws apply to federal lands. A spark arrester muffler may be available.

NOTE: The engine manufacturer is responsible for all engine-related issues with regards to performance, power-rating, specifications, warranty and service. Please refer to the engine manufacturer's owner's/operator's manual, packed seperately with your unit, for more information.

GENERAL SAFETY OPERATIONS

A. DANGER

1. Do not operate machine in confined areas where exhaust gases can accumulate.
2. Do not operate machine without mower chute deflector in place and operational.
3. Do not carry passengers.

B. WARNING

1. Do not operate machines under the influence of alcohol or drugs.
2. Do not operate machines without all guards and safety devices in place and functional.
3. Do not start machines if there are fuel or oil leaks or spillage — clean it up.
4. Do not operate machines near spilled or leaking fuels.
5. Do not stop or park machine over dry leaves, grass, debris, etc. that could be combustible.
6. Use extreme care when backing up.
7. Do not operate machine on slopes greater than 15 degrees (27%).
8. Do not operate machines on slopes when traction is reduced (wet grass, ice, soft ground, loose ground, leaves, pine needles, debris, etc.).
9. Avoid turning downhill if possible, go slowly and use extra care when turning downhill.
10. Do not operate machines during reduce visibility (low light, fog, rain, etc.).
11. Do not operate machines with non-approved attachments.
12. Do not operate machines that are damaged.....have machine repaired.
13. Do not operate machines that have not been properly maintained.
14. Use only replacement parts that are the same or equivalent to the original equipment.
15. Do not modify machines or any of their components, especially the engine governor!
16. Do not operate machine for more than 2 hours without hearing protection.

C. CAUTION

1. Use proper protective equipment when operating machine (gloves, boots, and hearing protection are recommended).
2. Read entire machine Operator's Manual.
3. Make sure operators are fully trained in the safe use of the machine.
4. Follow all safety instructions when using the machine.
5. Keep all safety signs legible and properly installed.
6. Do not check for hydraulic leaks with any part of the body.
7. Do not add fuel to a machine when the engine is running and/or the exhaust system is hot.
8. Keep machine clean and free of debris, grass, leaves, oil, grease, etc.
9. Place lap bars in neutral/start position, set park brake, disengage P.T.O., turn engine off, and remove ignition key before you dismount from machine.
10. Use machines laterally or diagonally across slopes, avoid going downhill when possible.
11. Go slowly and use extra care when descending slopes.
12. Disengage P.T.O. when crossing surfaces such as asphalt, concrete, loose ground, sand, gravel, etc.
13. Use extra care when loading and unloading machines from trucks or trailers.

SAFETY PRECAUTIONS

A. General

1. Read this Operator's Manual before starting the mower. Study the controls and learn the proper sequence of operation.
2. Do not allow anyone to operate or maintain this machine who has not read this manual. Never permit children to operate this machine.
3. Never carry passengers.
4. Do not remove any shields, guards or safety devices. If a shield, guard or safety device is damaged or does not function, repair or replace it before operating the mower.
5. Always wear safety glasses and safety shoes when operating or maintaining this mower. Do not wear loose-fitting clothing.
6. Disconnect the spark plug wires and remove the key from the ignition to prevent the engine from accidentally starting before performing any maintenance on this mower.
7. Never run the engine indoors without adequate ventilation. Exhaust fumes are deadly.
8. To avoid serious burns, do not touch the engine, exhaust pipe or muffler while the engine is running or until it has cooled after it has been shut off.
9. The liquid in the battery is dilute sulfuric acid. Always wear safety glasses and rubber gloves when working on the battery. Do not overfill the battery.
10. Lead-acid batteries generate hydrogen and oxygen gases which form an explosive mixture. Keep sparks and flames away at all times.
11. When looking for oil leaks, never run your hand over hydraulic hoses, lines or fittings. Never tighten or adjust hydraulic hoses, lines or fittings while the system is under pressure. If high-pressure oil penetrates the skin, the oil

must be removed within a few hours by a doctor familiar with this form of injury or serious complications may result.

B. Related to Fuel

1. Fuel is highly flammable. Please respect it.
2. Do not smoke or permit others to smoke while handling fuel.
3. Always use approved containers for fuel.
4. Always shut off the engine and permit it to cool before removing the fuel tank cap.
5. Always fill the fuel tank outdoors.
6. If the fuel container spout will not fit inside the fuel tank opening, use a funnel.
7. When filling the fuel tank, stop when the fuel reaches one inch from the top. This space is necessary for tank expansion. **Do not overfill**.
8. Wipe up any spilled fuel.
9. Prevent fire and explosion caused by static electric discharge. Use only non-metal, portable fuel containers approved by the Underwriter's Laboratory (U.L.) or the American Society for Testing & Materials (ASTM). If using a funnel, make sure it is plastic and has no screen or filter.
10. Static electric discharge can ignite gasoline vapors in a non-grounded fuel container. Remove the fuel container from the bed of a vehicle or the trunk of a car and place on the ground away from the vehicle before filling. Keep nozzle in contact with container opening while filling.
11. When practical, remove equipment from trailers or truck beds and re-fuel them on the ground. If this is not possible, use a portable, plastic fuel container to re-fuel equipment on a truck bed or trailer.

C. Related to Batteries

Batteries are stored electrical energy devices that may be serviceable with removable caps (the electrolyte levels can be checked), or may be non-serviceable (no attempt should be made to open the vents).

Batteries may contain lead (Pb) and sulfuric acid, and they must be re-cycled and not disposed of nor abandoned. Sulfuric acid can cause severe burns, and in the event of contact, the areas should be flushed with water and a physician contacted. Battery cases should not be punctured. Lead is poisonous and is contained within the positive and negative terminals as well as within the battery's internal gridwork of plates and active materials.

Explosive gases are generated when batteries are re-charged, so sparks, flames and heat sources should be avoided. Loose connections at the battery terminals can produce sprks and heat...connections to the terminals must be kept tight, and the terminals and battery surfaces kept clean of acids and corrosion. If batteries are re-charged or "jumped" from external sources, make sure that the connections are made properly and in the correct sequence...connect to the positive terminal of the good battery first, then connect that to the positive terminal of the weak battery. The third connection should be to the negative terminal of the good battery, followed by the negative terminal of the weak battery. If sparks are observed or heating of the wiring or connectors is detected, disconnect in reverse order (I.E., the negative terminal of the weak battery first). Batteries should be re-charged at a constant voltage...generally 14.5 +/- 0.5 volts DC for a nominal 12 volt DC battery.

D. When Mowing

1. Keep adults, children and pets away from the area to be mowed.
2. When operating this mower in the forward direction, DO NOT allow the steering levers to return to the neutral position on their own. Always maintain a firm grip on the levers, operate them smoothly and avoid any sudden movements of the levers when starting or stopping.
3. If the mower is equipped for side discharge, never use the mower without the discharge chute installed and placed in the down position.
4. Always remove debris and other objects from the area to be mowed.(**Note**: debris and loose grass will reduce traction.)
5. Mow only in daylight.
6. Watch for holes, sprinkler heads and other hidden hazards.
7. Avoid driving too close to trees, creeks, ditches, sand traps and other obstacles.
8. Before backing up, check behind you and watch where you're going.
9. Always reduce speed when making a turn, and when grass is wet.
10. Always mow across slopes, never up and down the slope. Do not operate on steep slopes and slow down before turning.
11. Be careful when crossing gravel paths or roadways. Always turn off the blade clutch switch and wait until the blades stop rotating and raise the cutting deck to the transport position. Always allow other vehicles to have the right-of-way.
12. If you hit a solid object while mowing, turn off the blade clutch switch, place the left and right steering levers in the neutral, opened-out position, move the throttle to slow, set the parking brake, shut off the engine and take the key from the ignition switch. Inspect for damage. Repair any damage. Make sure the blades are in good condition and that the

blade bolts are tight before restarting the engine.

13. Never leave the mower unattended without: turning off the blade clutch switch; placing the left and right steering levers in the neutral opened-out position; moving the throttle to slow; setting the parking brake; shutting off the engine and taking the key from the ignition switch.
14. Never walk or stand on the discharge side of a mower with the engine running. Turn off the blade clutch switch if another person approaches while you are operating the mower.
15. Never attempt to operate the traction unit without the mowing deck attached.
16. Keep the mower and especially the engine and hydraulic components clean and free of grease, grass and leaves to reduce the chance of fire and to permit proper cooling.

SAFETY DECALS AND LABELS



Part Number: 00030635



Part Number: 01002166

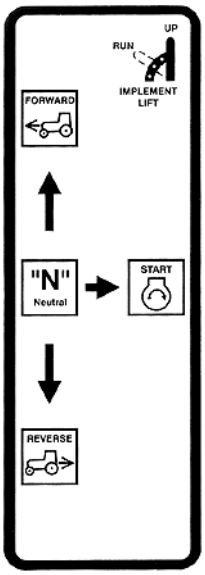

Part Number: 01003451

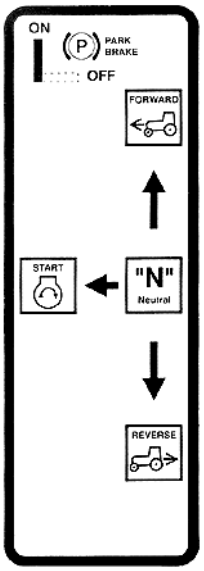

Part Number: 01003452

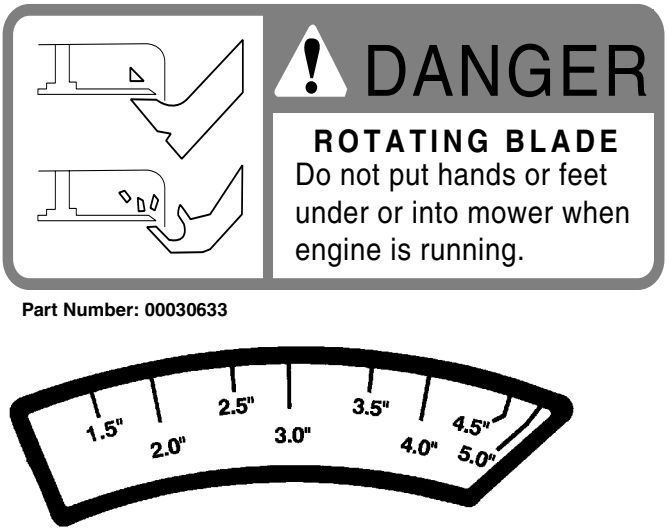

Part Number: 00030633

Part Number: 01003859

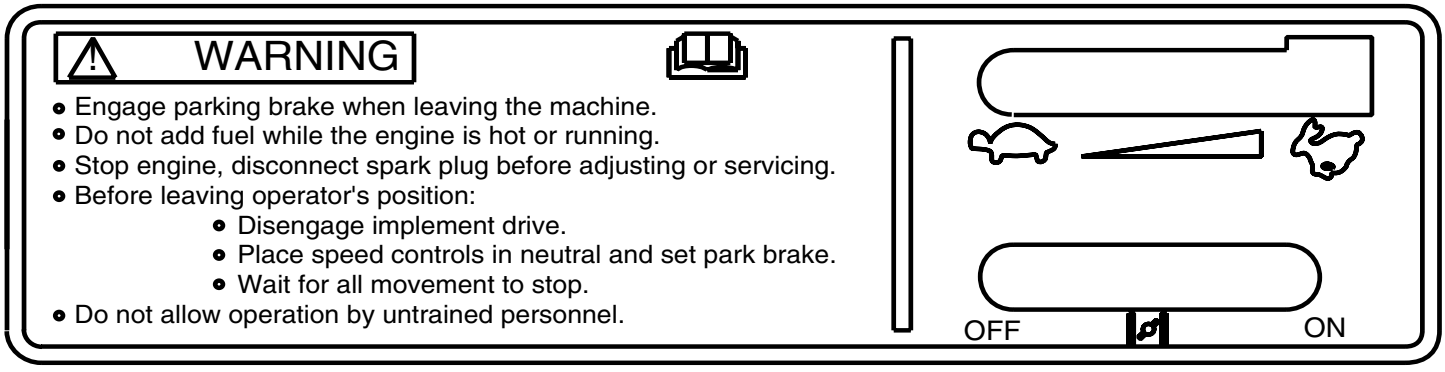

Part Number: 02000162

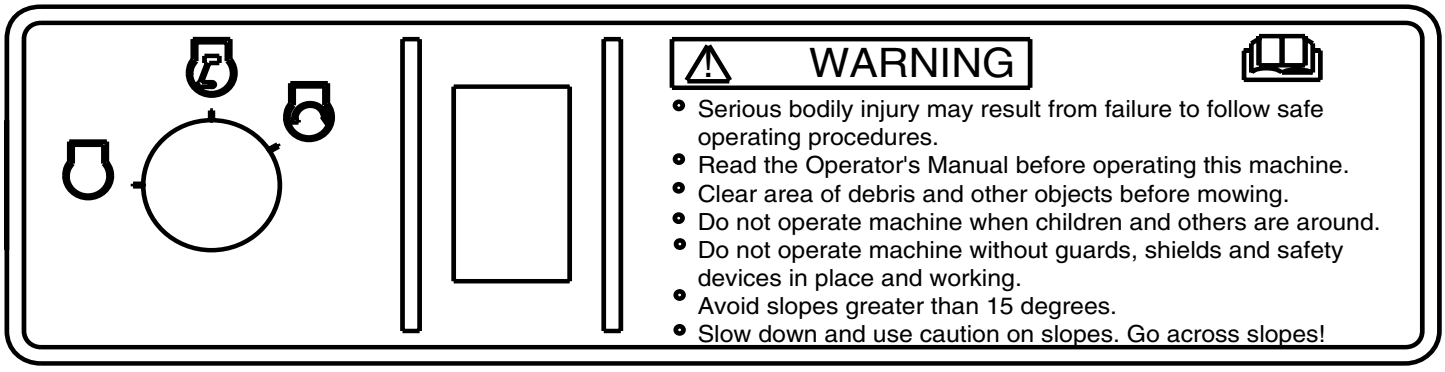

Part Number: 02000163

SPECIFICATIONS

GENERAL INFO.	
Controls:	Engine ignition and start switch; throttle; choke; left and right steering levers; electric blade clutch switch; parking brake; mower deck lift
Parking Brake:	Internal, mechanical linkage attached to the brake handle
Seat:	Adjustable seat. 5" Adjustment (fore-aft)
Frame:	2” Steel square tube and plate, all welded construction
Instrumentation:	Hour meter, Tachometer, Maintenance-minder
Front Caster Wheels:	11 x 4 - 5
Drive Wheels:	23x9.50 - 12 (Turf Pro)
Tire Pressure:	8-10 psi Rear, 20-25 psi front caster
Fuel Tank:	Two 5 gallon w/shutoff valve
Ground Speed:	0-8.0 + MPH forward. 0-4.3 MPH reverse
Net Weight:	848 lbs. w/50" deck

ENGINE INFO.	
Engine:	23 HP Kohler Engine
Type:	Vertical crankshaft air cooled V-Twin
Air Cleaner:	Dry paper media plus foam pre-cleaner
Lube System:	Pressurized with oil filter
Hydraulic System:	2 quarts and 1 pint filter per transaxle
Starter:	12-volt electric
Blade Brake Clutch:	Electric

TRACTION DRIVE INFO.	
Traction Drive:	Engine to two variable-speed hydraulic pump/motor, Hydro-Gear ZT-2800 transaxles

CUTTER DECK INFO.	
Cutter Deck;Drive:	50", Belt Driven
Deck Lift:	Hand lever w/pin lock for height adjustment
Cutting Height:	1-1/2" to 4"
No. of Blades	3, belt-driven, power take-off from engine

OPERATING INSTRUCTIONS

Figure. 1

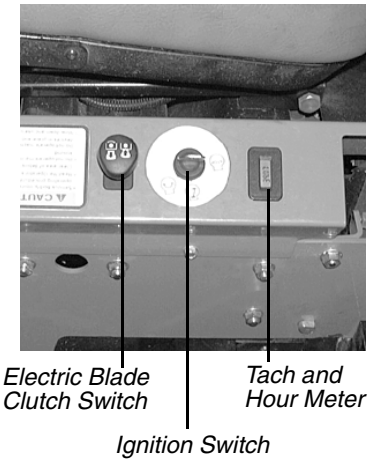

Figure. 2

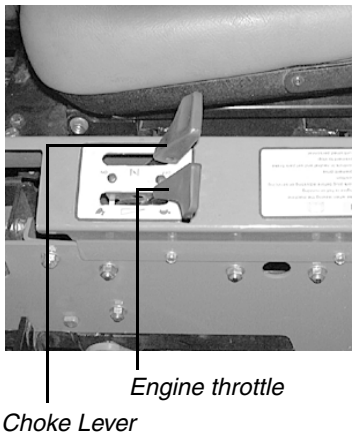

A.General

1. When Mowing:

a. Keep adults, children, and pets away from the area to be mowed.

b. When operating this mower, in the forward direction, do not allow the steering levers to return to Neutral on their own. Always maintain a firm grip on the levers, operate them smoothly and avoid any sudden movements of the levers when starting and stopping.

c. If the mower is equipped for side discharge, never use the mower without the discharge chute installed and placed in the down position.

d. Always remove debris and other objects from the area to be mowed (Note: debris and loose grass will reduce traction).

e. Mow only in daylight.

f. Watch for holes, sprinkler heads, and other hidden hazards.

g. Avoid driving to close to trees, creeks, ditches, sand traps, and other obstacles.

h. Before backing up, check behind and watch where you are going.

i. Always reduce speed when making a turn, and when grass is wet.

j. Always mow across slopes, never up and down the slope. Do not operate on steep slopes and slow down before turning. Avoid turning downhill if possible, start at the bottom and work up to the top. Use extra care and go slowly when turning downhill. Control the speed and direction of the zero turn machine “primarily” with the speed/directional control (lap bar) of the downhill side of the machine...I.E., maintain the uphill side lap bar “essentially” in a fixed position.

k. Be careful when crossing gravel paths or roadways. Always turn off the blade clutch switch and wait until the blades stop rotating and raise the cutting deck to the transport position. Always allow other vehicles to have the right of way.

l. If you hit a solid object while mowing, turn off the blade clutch switch, place the steering levers in the neutral, opened-out position, move the throttle to slow, set the parking brake, shut off the engine, and take the key from the ignition switch. Inspect for damage. Repair the damage. Make sure the blades are in good condition and that the blade bolts are tight before restarting the engine.

m. Never leave the mower unattended without observing the following: turn off the blade clutch switch, placing the steering levers in the neutral open-out position, moving the throttle to slow, setting the parking brake, shutting off the engine and taking the key from the ignition switch.

n. Never walk or stand on the discharge side of the mower when the engine is running. Turn off the blade clutch switch if another person approaches while you are operating the mower.

o. Never attempt to operate the traction unit without having the mowing deck attached.

p. Keep the mower and especially the engine and hydraulic components clean and free of grease, grass, and leaves to reduce the chance of fire and permit proper cooling.

q. Always mow at full throttle.

2. Safety Awareness when Mowing

a. Do not operate on steep slopes, those above 15 degrees (27% slope).

b. Avoid turning downhill if possible, if not use extra care and go slowly.
c. Avoid turning when going downhill, traction is at a minimum going downhill.
d. Do not operate with discharge side of the mower toward streets, buildings, playgrounds, parking lots, other machines, animals, and other people.
e. Avoid operation or use extreme care if the traction surface is wet, unstable, or slippery.
f. Use extra care when grass clippings, leaves, pine needles, or debris are present as traction can be reduced.
g. Slow-down before turning and come to a complete stop before any zero turn maneuver.
h. Do not stop machine or park machine over combustible materials such as dry grass, leaves, debris, etc.

3. To Mow Grass and Produce a Striped Pattern

a. Pick a point on the opposite side of the area to be mowed (post, tree, shrub, etc.).
b. If on an hillside, start at the bottom so that the turns are uphill rather than downhill.
c. Align the mower so as to head directly toward the object on the far side.
d. Slowly increase the speed of the machine to match cutting conditions, terrain, and operator familiarity with the controls and keep the machine headed directly toward the alignment object. Do not go fast as to reduce cut quality or to be uncomfortable in controlling the speed and direction of the machine.
e. When approaching the other end of a strip, slow down or stop before turning. A U-turn is recommended unless a zero turn is required. The speed of a U-turn that will allow for machine controllability and minimal turf defacement will be dependent on several factors including: the speed of the turn, the radius of the turn, the tire tread pattern, the traction coefficient of the tire to the traction surface, the slope of the traction surface.
f. Remember, a zero turn requires that the forward or reverse travel of the machine be stopped prior to the initiation of the turn or severe turf defacement can occur.
g. To prevent rutting or grooving of the turf, change the direction that the strips are mowed by approximately 45 degrees the next and each subsequent time that the area is mowed.

B.Controls

1. **Engine Ignition and Start Switch:** (See Figure 1.) Located on the instrument housing below the right side of the operator's seat. When the key is inserted and turned clockwise, 45 degrees, the ignition circuit is closed. Turning the switch further against spring pressure starts the engine. The engine will only start if the blade clutch switch is in the "off" position, the parking brake is engaged and the left and right steering levers are in the neutral, opened-out position. The key should always be removed from the switch if the operator leaves the mower's seat.
2. **Engine Throttle Control:** (See Figure 2.) Located on the left side of the mower next to the operator's seat. Moving the throttle control from the rear to the front will increase the engine speed from slow to fast.
3. **Left and Right Steering Levers:** (See Figure 3.) These hinged levers open out to the side in the neutral position to permit the operator to be seated or to leave the mower's seat. The operator, when seated, can pull the levers up to the operating position, a comfortable forearm's length away. These levers control all of the movements of the mower. Pushing both levers forward causes the mower to move forward. Pulling both levers back causes the mower to move backward. Pushing one lever ahead of the other lever causes the traction wheel on the side where the lever is ahead to rotate faster than the other traction wheel, making the mower turn toward the side where the lever is behind. When one lever is pushed forward and the other lever pulled back the same amount, one traction wheel will turn in reverse and the mower will turn within its own length.

   In order to start the engine, both steering levers must be opened out to the side in the neutral position; the parking brake must be engaged; and the blade clutch switch must be "off". However, once the engine starts, the parking brake must be released before the operator places the steering levers into the operating position or the engine will automatically shut off.

Note: The Steering Lever will return toward neutral when released, but they should be placed in neutral by the driver. If the Drive Handles are not placed in neutral, the tractor may creep.

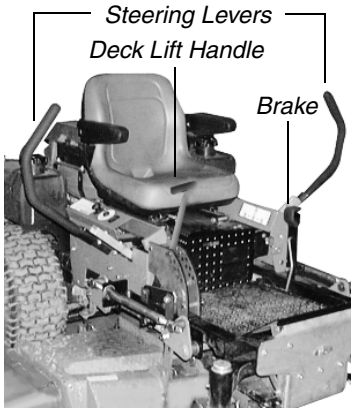

Figure. 3

4. **Electric Blade Clutch Switch:** (See Figure 1.) Located on the right side of the mower beside the ignition switch. This is an “on/off” push pull switch that controls the electric blade clutch which supplies power to the cutting blades through the PTO. The switch must be cut off to start the engine and should be off for safety any time another person approaches the mower or the mowing deck is raised to the transport position. Power to the electric clutch will also be cut off if the operator leaves the operator’s seat.
5. **Parking Brake:** (See Figure 3.) Located on the left side of the traction unit. The handle is an overcenter lever which applies the internal drum-type brake on each drive wheel when the handle is in the up position. The brake must be engaged in order to start the engine.
6. **Deck Lift Handle and Optional Foot Pedal Lift Assist:** (See Figure 3.) Located on the right front corner of the mowing deck. Raise the mowing deck to the transport position, by pulling the lever to the rear and moving it inward into the stop for transport. To lower the mowing deck, pull the deck lift handle and move it outward. This lower’s the deck to the cutting position.The foot pedal lift assist (not pictured above) can provide “lift assist” to the hand lever or with “foot effort only”. To provide assistance to the lift handle: remove the hairpin clip from the locking pin and remove the pin from the pedal assembly. Fold the pedal down to the horizontal position so the hole in the pedal aligns with the hole in the lever. Reinstall the locking pin and hairpin clip. Pull on the Lift handle and depress the foot pedal to raise the deck. Lifting with “foot effort only” depress the foot pedal (the hand lever will lock into transport position if fully depressed). To release the lift mechanism depress the foot pedal, move the hand lever outward and slowly reduce foot pedal effort to lower the mechanism. To service the unit: Remove the hairpin clip from the locking pin and remove the pin from the pedal assembly. Fold the pedal up to vertical position so the hole in the pedal aligns with the hole in the lever. Reinstall the locking pin and hairpin clip. This is the required position for the foot pedal for the foot platform to tilt forward and to access some of the machines components.

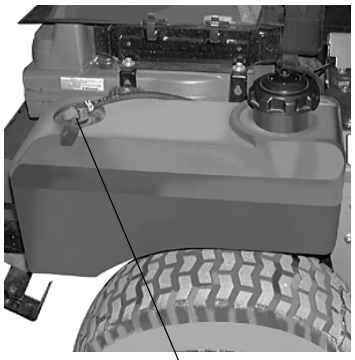

Figure. 4

7. **Fuel Shutoff Valve:** (See Figure 4.) Located on top of the fuel tank(s). When turned in a clockwise direction until it stops, it will shut off the flow of fuel to the engine. When turned in a counterclockwise direction it will open and allow fuel to flow to the engine. Close this valve anytime the mower is trailered or you are not going to run the mower for a period of 30 minutes or more to prevent flooding the engine.
8. **Seat Adjustment Lever:** The Seat Adjustment Lever is located beneath the seat. The Seat Adjustment Lever is used to move the seat forward and backward. To place the seat in the desired position pull the seat adjustment lever to the left then push the seat forward or back to the desired position. Release the lever so the seat will lock in place.
9. **Digital Tachometer and Hour Meter:** (See Figure 1) Located on the right side of the mower in front of the ignition switch. When the machine is running the tachometer displays engine rpm. When the machine is off the tachometer displays running time.
10. **Choke Lever:** (See Figure 2) The Choke Lever is located on the left instrument panel next to the seat. The Choke Lever is operated manually. Having the Choke Lever in the ON position helps the engine to start during initial start-up. During normal operation the Choke Lever should be in the OFF position.

Note: There will be a flashing “LUBE” for each recommended lubrication interval. There is a flashing “OIL” at each recommended engine oil and filter change. Reset after hour.

C.Initial Adjustments

1. **Check the fluid levels and tires:**

   Note: These checks should be made daily, before starting the engine.

   a. **Fuel:** Using a good grade of unleaded, regular gasoline (for a gasoline engine), fill the fuel tank. When the fuel reaches one inch from the top of the tank, stop. DO NOT OVERFILL. Space must be left for expansion.

   b. **Engine Oil:** (Filled at the factory before shipment.) Pull out the oil dipstick, wipe it off and reinsert it. Pull it out again and read the oil level. If it is below the operating range, add oil through the fill tube using a funnel to bring it up to the top of the operating range.

   Note: Gasoline Engine: Use SAE 10W30 or SAE 10W40 engine oil, rated for service SJ.

   c. **Hydraulic Oil:** (Filled at the factory before shipment.) The hydraulic oil tank is located behind the operator's seat. Always wipe off the area around the oil tank fill neck before checking the oil level to prevent dirt from contaminating the oil. Remove the cap and make sure the oil level is up to the mark on the oil tank. If the oil level is low, fill with Shell Rimula 15W40 oil or equivalent.

   d. **Tires:** 8-10 psi Rear, 20-25 psi Front Caster Tires

   Note: New tires are overinflated in order to properly seat the bead to the rim. The normal working pressure for the traction tires is 8-10 psi. The front caster wheels should be inflated to 20-25 psi.

2. **Check that all Nuts, Bolts and Screws are Tight.**

3. **Check the tension of the deck drive belts.**

   a. Remove the deck cover

   b. The tension of the deck drive belts are maintained by a spring mechanism that adjusts for wear and stretch.

   c. Examine the belts for cuts, fraying, and excessive wear. Replace if any of these are detected.

   d. Replace the deck cover.

4. **Adjust the Mowing Deck:** The cutting height is set anywhere in the range of 1-1/2" to 4". You may need to adjust the mowing deck to achieve the proper angle for mowing. Follow the procedures below to set the appropriate angle to the mowing deck.

   a. Park the mower on a flat paved surface, engage the parking brake, shut off the engine, remove the key from the ignition switch, remove connection of the spark plugs and using the transport lever, lower the mowing deck into the cutting position.

   b. Using a ruler, pencil and paper, measure and note the distance from the paved surface to the bottom edge of the mowing blade at the front and the back of the deck on each side of the mower. (Four dimensions.)

   Note: The front edge of the mowing deck should be 1/8"-1/4" below the rear edge of the deck so that the blades are cutting grass in only the front half of their circular path. This decreases friction and reduces the drive power required.

   c. If the dimension at the front of the mowing deck is 1/8"-1/4" lower than the dimension at the rear of the deck on each side of the mower, do not adjust. If not, you will need to adjust the Deck Lift Spring Assist (See Figure 5). You may also need to adjust the Deck Links (See Figure 5).

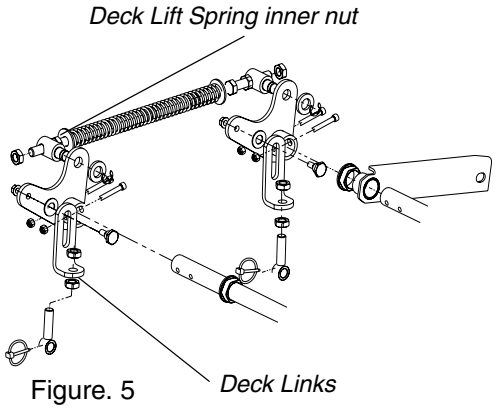

Figure. 5

   d. Lower the mower deck to the cutting position. With a wrench loosen the inner rear nut on the Deck Lift Spring Assist. To adjust the deck up or down, use a wrench and with a few turns, adjust clockwise or counter clockwise the outer rear nut of the Deck Lift Spring Assist. Repeat this procedure on the opposite side of the Mower. Once the deck is adjusted, retighten bolts.

   e. With the deck still in the cutting position, adjust the Deck Links. With a wrench loosen the top inner bolt of the Deck Link. To adjust the side of the deck up or down turn the top bolt clockwise or counter clockwise a few turns. Adjust both front and rear Deck links as necessary. Retighten nuts.

   f. Raise the mowing deck to the transport position using the transport lever.

   g. Use the transport lever to lower the mowing deck to the cutting position and repeat step "b." above to make sure that the desired cutting height has been attained. If

the dimensions are not correct, repeat steps “c.” through “f.” above.

5. **Lubricate all fittings listed in the maintenance section.**

D. Zero Turn Break-In And Operating Procedures

⚠ DANGER:

Reread the “When Mowing” Safety Precautions.

The following procedures are suggested for operators of ride-on machines which have zero turn capabilities.

1. **Orientation:**
   a. Read the entire Operator’s Manual.
   b. Sit on the machine, adjust the seat before-and-after, then adjust the speed/directional (lap bar) controls (they can be adjusted up-and-down — 9/16" wrench required). Optional lapbar can also be adjusted fore and aft.
   c. Become familiar with all of the machine controls, instrumentation, safety and instruction signs, and safety devices.
   d. Move (or have moved) the machine to a safe, level area with no obstructions including objects, pedestrians, and animals.
2. **Initial Operation:**
   a. Use protective equipment for eyes, hands, hearing, feet, legs, head and other areas of the body if needed — safety eye glasses, gloves, earplugs, boots, hats, etc.

⚠ WARNING:

Hearing Protection is required for all operator exposure exceeding two (2) hours.

   b. Ensure that the area is free of animals and bystanders, especially children!
   c. Survey the area where the equipment is to be used to make sure it is free of debris, sticks, stones, wires, bones, and other foreign objects which could cause injury to bystanders, damage to the machine, or damage to nearby facilities.
   d. Inspect the machine to make sure:
      1. All guards, shields (including mower chute deflector) are in their proper place, are secure, and are functional.
      2. That there are no spilled or leaking fuel or oil sources, nor loose fuel or hydraulic tank caps, hoses or fittings.
      3. That there are no loose or missing hardware nor any missing items.
      4. That no non-approved devices are installed.
      5. That all safety signs and decals are properly installed and legible.
   e. This is a one person machine, operator only! Riders are not permitted under any circumstance!
   f. To start the engine on the machine:
      1. Make sure the park brake is set to the “UP” position, both lap bars are in the neutral/start (opened-out) position, and the Power Take Off (PTO also referred to as blade control switch) is in the “off” (down) position.
      2. Push the choke control forward to the on position and the engine speed control (throttle) forward (half way).
      3. Insert the ignition key, turn the switch toward the spring-loaded “Start” position, maintain the Start position until the engine begins to run, then release the switch (it will return to the “Run” position).
      4. Retard the choke slowly by pulling it rearward. If the engine is “cold”, the choke may need to be partially applied for a few minutes. Be sure to totally pull the choke to the off position after the engine has “warmed up”.
   g. Check safety devices:
      1. With the park brake engaged, move one of the lap bars (speed/directional control) from the neutral/start position to the neutral position (out of the slot, toward the center of the machine) — the engine should stop running. Move the lap bars back to the neutral/start position and the engine should run.
      2. Repeat this procedure with the opposite side lap bars.
      3. With the park brake engaged and the lap bars in the neutral/start position, advance the engine speed control completely forward (Hi-idle), engage the PTO control switch (pull upward), then lift off the seat — the engine should stop running. Sit down and the engine should run. Turn off the PTO by pushing the control switch down.
   h. To drive in the FORWARD direction:
      1. Set the engine speed to 2000 to 2500 rpm (refer to tachometer on right control panel). This must be increased to full speed (3525-3675 rpm) after becoming familiar with the machine.
      2. Release the park brake to the down position.
      3. Move both lap bars out of the neutral/start position to the neutral position (toward center of machine). Slowly, move both lap bars toward the front of

the machine until the machine begins to move forward — release the lap bars and the machine should stop. The more that the lap bars are moved toward the front of the machine, the faster the machine will move in the forward direction. Release the lap bars and the machine should stop traveling forward. (This is a safety check, the normal procedure is for the operator to slowly bring the lap bars to the neutral position).

4. Do not advance the lap bars rapidly as this could cause turf defacement, loss of traction, and/or instability.
5. To turn, advance one lap bar ahead of the other and the machine will turn toward the opposite from the side that was advanced — I.E. to turn clockwise (to the Right), move the LEFT lap bar forward more than the right side, and to turn counter-clockwise (to the LEFT), move the RIGHT lap bar forward more than the left side. NOTE: If one lap bar is in the neutral position and the other is advanced, the turn side tire will not rotate and a “pivot turn” will be executed — turf defacement could occur (if on grass) as well as potential damages to the traction surface and the tire. If the lap bar on the turn side is not brought all the way to neutral, then the turn side tire will continue to rotate and a “U-turn” will be executed with a low potential for turf defacement as well as traction surface and tire damage.

i. To drive in the REVERSE direction:
   1. Make sure no bystanders, animals, or objects are behind the machine. Look behind the machine, and use extreme care.
   2. Slowly, move both lap bars toward the rear of the machine until the machine begins to move rearward. Release the lap bars and the machine should stop. The more the lap bars are moved toward the rear of the machine, the faster the machine will move in the reverse direction. Release the lap bars and the machine should stop traveling in reverse (this is a safety check, the normal procedure is for the operator to slowly bring the lap bars to the neutral position).
   3. Do not retard the lap bars rapidly as this could cause turf defacement and/or loss of traction.
   4. To turn, retard one lap bar ahead of the other and the machine will turn toward the same side that was retarded — I.E., to turn counter-clockwise (to the LEFT), move the LEFT lap bar rearward more than the right side, and to turn clockwise (to the RIGHT), move the RIGHT lap bar rearward more than the left side. NOTE: If one lap bar is in the neutral position and the other is retarded, the turn side tire will not rotate and a “pivot turn” will be executed. Turf defacement could occur (if on grass) as well as potential damages to the traction surface and the tire. If the lap bar on the turn side is not brought all the way to neutral, then the turn side tire will continue to rotate and a “U-turn” will be executed with a low potential for turf defacement as well as traction surface and tire damage.

j. To perform a “zero turn”:
   1. Please note, a zero turn maneuver can not be executed while the machine is moving in the Forward or, Reverse directions, the machine must come to a stop first.
   2. To turn clockwise, slowly move the LEFT lap bar forward while simultaneously moving the RIGHT lap bar rearward. Release both lap bars and the machine should stop turning.
   3. To turn counter-clockwise, slowly move the RIGHT lap bar forward while simultaneously moving the LEFT lap bar rearward. Release both lap bars and the machine should stop turning (this is a safety check, the normal procedure is for the operator to slowly bring the lap bars to the neutral position).

3. Start the Engine:

a. Open the fuel shutoff valve.
b. Sit on the Seat. Set the parking brake “On” to the up position.
c. Move the left and right steering levers to the neutral, opened-out position.
d. Push the electric blade clutch switch down to the “Off” position.
e. Push the throttle control to a position a third of the way between slow and fast.
f. Insert the key in the ignition and start switch and turn the switch to “On”.
g. Gasoline Engine: If the engine is cold, push the choke to the on position.
h. Turn the ignition key in a clockwise direction to the “Start” position until the engine starts.

Note: Do not hold the key in the “Start” position for more than 10 seconds or you may damage the starter. If the engine does not start in this time, wait about 30 seconds and try again.

i. Gasoline Engine: Once the engine starts, pull the choke rearward halfway and as the engine warms, pull the choke all the way to the off position.

4. **Operating the Mower:** Operating a zero-turning-radius mower is not like operating a tractor-type riding mower. The zero-turning-radius mower is much more maneuverable and much less fatiguing to operate. However, getting used to the fingertip control of the zero-turning-radius mower takes some practice. We strongly recommend that you locate a "test area" where you can operate the mower for about 30 minutes without being disturbed.
   a. Get into the operator's seat.
   b. Start the engine.
   c. Use the transport lever to raise the mowing deck to the transport position. Make sure the blade clutch switch is off.
   d. After the engine has warmed, adjust the throttle to the fast position.
   e. Release the parking brake to the down position.
   f. Fold the steering levers in to the operating position.

⚠ WARNING:

When operating this mower forward, do not allow the steering levers to return to the neutral position on their own. Always maintain a firm grip on the steering levers, operate them smoothly and avoid any sudden movements of the levers when starting or stopping.

   g. To go forward, move both steering levers slightly forward and the mower will slowly move forward. The farther you move the levers forward the faster the mower will go forward.
   h. To back up, move both steering levers slightly backward and the mower will slowly move backward. The farther you move the levers backward the faster the mower will go backward.
   i. To turn, pull the lever back on the side to which you want to turn. The farther back you pull the lever, the faster and more sharply you will turn. Initially, you will have to be careful to avoid turning to fast and too far.
   j. After you have mastered operating the mower, use the transport lever to lower the mowing deck to the cutting position and pull on the electric blade clutch switch to start the blades rotating.
   k. Practice mowing in straight passes. When you feel confident, slowly practice mowing around obstacles such as trees.

5. **Parking the Mower:**
   a. Push off the electric blade clutch switch.
   b. Use the Deck Lift Handle to raise the mowing deck to the transport position.
   c. Drive the mower to the cleanup or storage area.
   d. Move the throttle to slow.
   e. Place the steering levers out in the neutral position.
   f. Set the parking brake in the up position.
   g. Turn off the ignition switch and take the key from the switch.
   h. Close the fuel shutoff valves.

E. Mower Cutting Blades

The blades normally "factory installed" on a mower afford the best grass cutting performance on the majority of grasses and mowing conditions; however, there will be occasions whereby the grass type, stage of grass growth, soil conditions, and weather conditions will require different cutting blade types. Since the mower decks are designed so that over-lap of the cutting blades generally exceed 1.5", there is no need for orientation of one cutting blade to an adjacent blade (I.E., the blades do not need to be "timed" nor synchronized).

Hi-lift- These are generally the best cutting blades for most grasses and mowing conditions. These blades will provide extra "lift" for the thinner leaf grasses, will handle lush grasses, and will provide maximum grass and debris discharge. These blades are generally required for material collection systems. More horsepower is required for these blades when compared to others, and they generally produce the highest noise levels.

Medium-lift- These blades require less horsepower than the hi-lift, and they generally work well in wider leaf grasses and some mulch applications.

Low-lift- These blades require less horsepower than hi-lift and medium-lift blades, and they generally work best with wide leaf grasses, sparse grass growth, and sandy soil conditions. They generally produce the lowest noise levels. Bahia blades are configured without offset, and with a maximum amount of sharpened cutting edge.

Mulch- These blades are generally designed for use in cutting decks equipped with mulch baffles. The shape of the blade generally produces higher turbulence in order that the grass can be repeatedly cut and re-cut into smaller pieces. These blades generally require more horsepower than other blades. Mulch blades work best when the grasses are cut at the highest levels, minimal lengths of grasses are removed, and grass conditions are generally dry.

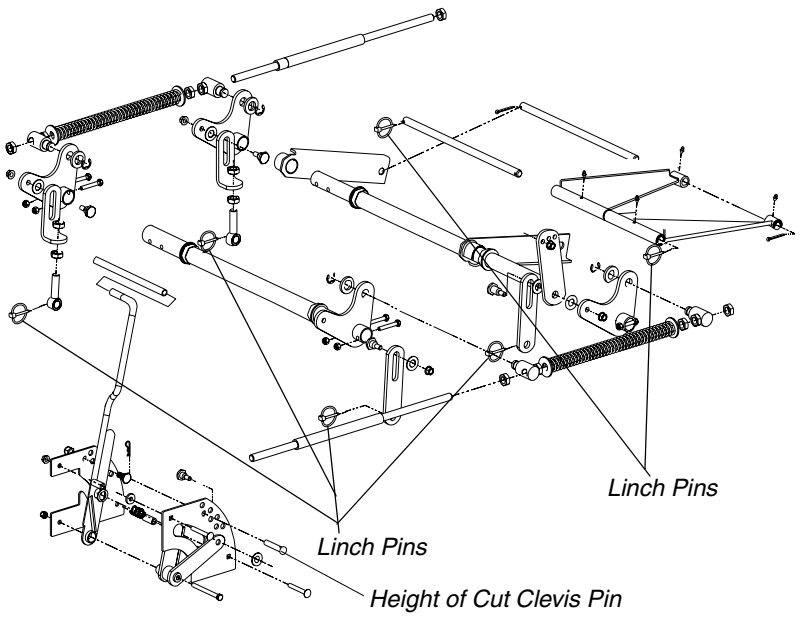

Figure. 6

MAINTENANCE AND SERVICE

⚠ WARNING:

Disconnect the spark plug wires or remove the key from the ignition to prevent the engine from accidentally starting before performing any maintenance on this mower.

A. Mower Deck

1. Removing the Mower Deck:

a. Apply the parking brake. Remove ignition key and both spark plug boot.
b. Lower the cutter deck to the ground. Capture the lift handle by placing the height of cut clevis pin above the lift handle.
c. Remove tension of the PTO belt by moving the belt tensioning rod.

Note: There is a certain amount of spring tension due to the weight of the deck. When removing the lift linkage from the deck the tension of the springs will go from the deck to the lift handle. Not capturing the lift handle while removing the lift linkage from the deck will cause it to snap back.

d. Detach the mower drive belt.
e. Remove six linch pins (See Fig. 6) (4) from the deck and (2) from the front of the mower. Remove the linch pins on the left and right rear side of the cutter deck (2); remove the linch pins on the left and right front side of the cutter deck (2); and remove the linch pins on the front of the mower (2).
f. Turn front caster wheels outward.
g. Shift the deck toward the ignition switch side of the mower and remove.
h. To install reverse the process.

2. Changing a Blade:

a. Jack up the front of the mowing deck about one foot and block it in that position.
b. To prevent the blade from turning, secure the blade by placing by placing a block of wood between the blade and the deck housing.
c. Use a 1-1/8" socket wrench on the pulley side of the spindle to secure.
d. Remove the hex nut using a 1-1/8" wrench.
e. Remove the hex nut.
f. To replace the blade reverse the above process and tighten nut to 100-120 ft. lb.

⚠ WARNING:

Never mow with dull blades! Blades that are bent should be replaced! The cutting blades are sharp and can cause severe injury. Wrap the cutting surface of the blade with a rag to avoid injury.

a. apply the parking brake.
b. Clean any debris from the blades. Keep blades sharp and free of build up at all times.
c. Sharpen blades evenly at the original 30° angle to maintain balanced cutting blades. Do not sharpen the underside of the blades. Use a electric blade sharpener, a conventional electric grinder or a hand file to sharpen the blades.
d. Replace any blade with severe nicks or dents that cannot be removed by filing.
e. Check the balance of the blade after sharpening by placing it on a blade balancer. Do not use un-balanced blades.
f. If the blade dips on one end, file stock off of the cutting surface on that end.

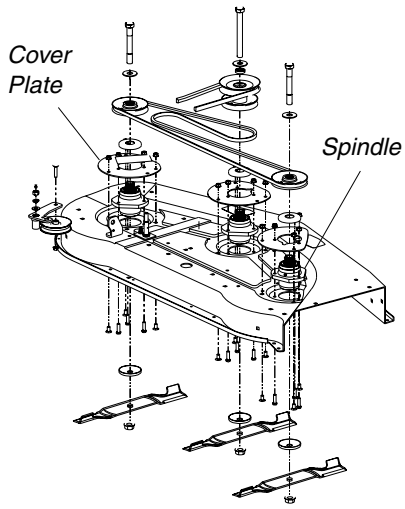

Figure. 7

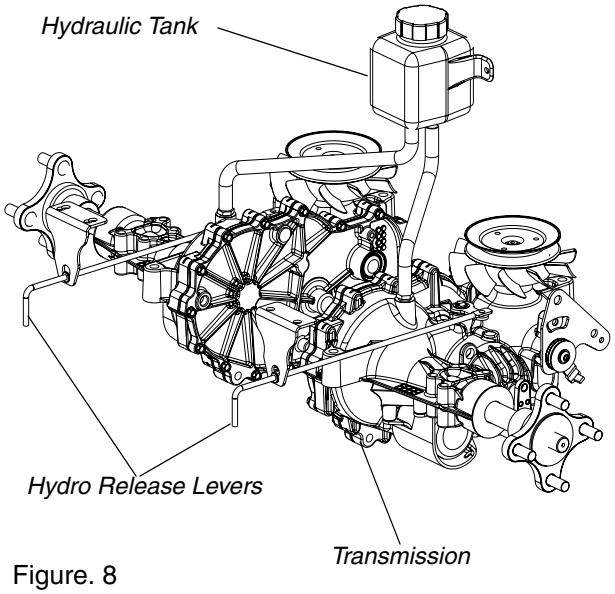

Figure. 8

Note: Blades that cannot be easily balanced—REPLACE.

3. Changing the Blade Drive Belts:

a. Apply the parking brake. Remove ignition key and both spark plug boots.
b. Unscrew the wing nuts from the deck covers and remove both covers.
c. Using a 1/2" socket breaker bar or socket rachet insert the male end into the 1/2" opening in the lower idler arm assembly and pull the idler arm clockwise. While holding the idler arm back, loosen the blade drive belt from the pulley and slide the belt away from the pulley.
d. Remove tension of the PTO belt by moving the belt tensioning rod. Loosen the belt retaining bolt.
e. Pull the tensioner pulley away from the belt and remove the PTO belt then remove the blade drive belt.
f. Reverse the process to install the belt.

Note: When replacing belts do not overtighten. Adjust the idler pulley so that a ten-pound pull with a spring scale between two pulleys deflects the belt about 1/2".

4. Changing the Spindle Assembly

a. Jack up the front of the mowing deck about one foot and block it in that position.
b. Make sure the blade clutch is disengaged.
c. Remove the deck cover.
d. Remove the drive belts. (See 3. Changing Blade Drive Belts.)
e. Remove the cutter blade. (See 2. Changing a Blade.)
f. Using a wrench or socket rachet remove four hex nuts, and the four hex head cap screws. Remove the spindle assembly.

B.Hydraulic Oil

⚠ WARNING:

Never overfill the hydraulic units. Damage can occur if the oil level is not within the proper operating range.

Note: when adding hydraulic oil, do so in small quantities and recheck the oil level before adding more. It is important that you do not overfill the reservoir.

1. Adding Hydraulic Oil (use Shell Rimula SAE15W40 or equivalent)

a. Place the Mower on a level surface and engage the parking brake.
b. Stop the engine and remove the key from the ignition switch.
c. Clean the area around the Hydraulic Oil fill neck.
d. Remove the hydraulic fill cap and check the level. The correct level is up to the lowest hole of the oil tank fill neck.
e. Pour hydraulic oil into the reservoir up to the lowest hole in the oil tank fill neck, if necessary.

2. Draining Hydraulic Oil

Used hydraulic oil must be disposed of properly. Do not pour it down a drain or sewer, or dump it on open land, this creates an environmental hazard. Please be aware of the environment when disposing of used oil.

a. Place the Mower on a level surface and engage the parking brake.

b. Stop the engine and remove the key from the ignition switch.
c. Remove the mower deck. See Mower Deck on page 15.
d. Raise the seat forward to expose the hydraulic oil fill point.
e. Clean the area around the hydraulic fill oil cap.
f. Remove hydraulic fill oil cap.
g. Place a suitable container (at least 2 gallon) under the hydraulic reservoir and the transaxles.
h. Remove the hydraulic filter from each transaxle to allow hydraulic oil to drain. (See Figure 8)
i. Coat new filter seals with oil before installation.
j. Add hydraulic oil to reservoir until the level remains at the mark.
k. Run and purge gearboxes. Check oil level.
l. Add proper amount of hydraulic oil to reservoir and repeat step K.

C.Electrical Circuit

⚠ Danger:

Read General Safety Precautions Nos. 9 and 10.

1. **Battery:** The battery is located beneath the operator's seat. Remove the fillcaps and check the level of the liquid electrolyte in the battery every 50 operating hours. If the level in any of the six cells has dropped below the bottom of the split ring inside the fill hole, refill the cell with distilled water. To keep the outside of the battery clean, brush on a strong solution of bicarbonate of soda and water and rinse with clean water. Keep the contacts and cable ends clean with a wire brush and make sure the connections are tight. Coat the terminals with petroleum jelly to prevent corrosion.
2. **Battery Storage:** When storing the Mower for long periods of time the following guidelines should be taken.
   a. Disconnect the battery cables from the terminals and remove the battery. You will have to remove the control panel to access the battery strap. Replace control panel.
   b. Clean the battery before storing. A dirty battery will lose its charge over time.
   c. Store the battery with a full charge. A discharged battery will freeze (refer to the table below)..

Specific Gravity	Freezing Temp (°F)
1.265	-71
1.250	-62
1.200	-16
1.150	5
1.100	16

   d. Recharge battery when ever the specific gravity value is less than 1.225

3. **Battery Removal**

⚠ Warning:

When removing the cables from the battery follow these steps to avoid a short between the wrench and the frame.

   a. Remove the Negative (black) cable.
   b. Remove the Positive (red) cable.
   c. Release the hold down straps.
   d. Remove the battery without tipping.

4. **Installing the Battery**

Note: The battery is delivered from the factory fully charged and filled with electrolyte.

   a. Attach the Positive (red) cable.
   b. Attach the Negative (black) cable.
   c. Attach the rubber battery strap.

5. **Jump Starting**

⚠ Warning:

Failure to use this starting procedure can cause sparking, and the gases in the battery to explode.

   a. Attach the end of the red jumper cable to the Positive terminal (+) of the charged battery.
   b. Attach the other end of the red jumper cable to the Positive terminal (+) of the low charge battery.
   c. Attach the end of the black jumper cable to the Negative terminal of the charged battery.
   d. Attach the other end of the black jumper cable to the frame of the unit with the low charge battery.

6. **Fuses:** There is one fuse located in the wiring between the battery and ignition switch and

other electrical components. This is a standard plug-in type automotive fuse rated at 20.0 amp.

7. **Safety Switches:** There are five safety switches in the electrical circuit which control the engine. They are (1) the blade clutch switch, (2) the parking brake switch, (3) the left and (4) the right steering lever switches and (5) the seat switch.They operate so that in order to start the engine, the blade clutch switch must be off, the parking brake must be engaged, and both steering levers must be opened-out to the side in the neutral position. Once the engine is started, the seat must be occupied and the parking brake must be released before either of the steering levers is folded up to the operating position or the engine's electronic ignition will be grounded out and the engine will stop. Also, the seat must be occupied before the blade clutch switch can cause the blades to rotate.
8. **Safety Switch Operation Checks:** The following operational checks should be made daily.
   a. **Blade Clutch Switch:** Sit in the operator's seat. With both steering levers opened-out in the neutral position and the parking brake engaged, turn the blade clutch switch "on" and try to start the engine. The engine should not start. If it does, the blade clutch switch must be replaced. If the engine does not start, turn the blade clutch switch "off" and start the engine. Now turn the blade clutch switch "on" and the blades should rotate. If the blades do not turn, the blade clutch switch must be replaced, the seat switch must be replaced or the electric PTO clutch must be repaired.
   b. **Parking Brake Switch:** Sit in the operator's seat. With both steering levers opened-out in the neutral position and the blade clutch switch "off", release the parking brake and try to start the engine. The engine should not start. If it does, the parking brake switch must be repositioned or perhaps replaced. If the engine does not start, engage the parking brake and start the engine. Swing one steering lever up to the operating position and the engine should stop. If the engine does not stop, the parking brake switch must be repositioned or replaced.
   c. **Left and Right Steering Lever Switches:** Sit in the operator's seat. With both steering levers opened-out in the neutral position, the parking brake engaged and the blade clutch switch "off", swing the left steering lever up to the operating position and try to start the engine. The engine should not start. If it does, the left steering lever switch must be repositioned or perhaps replaced. Open the left steering lever to the neutral position and swing the right steering lever up to the operating position and try to start the engine. The engine should not start. If it does, the right steering lever switch must be repositioned or perhaps replaced. If the engine does not start, Open the right steering lever to the neutral position and start the engine. Swing the left steering lever up to the operating position and the engine should stop. If the engine does not stop, the left steering lever switch must be repositioned or replaced. Open the left steering lever out to the neutral position and start the engine. Swing the right steering lever up to the operating position and the engine should stop. If the engine does not stop, the right steering lever switch must be repositioned or replaced.
   d. **Seat Switch:** With both steering levers opened-out to the neutral position, the parking brake engaged and the blade clutch switch in the "off" position, start the engine. Now release the parking brake, sit in the operator's seat and swing one of the steering levers up to the operating position. Raise off of the operator's seat and the engine should stop. If the engine does not stop, the seat switch must be replaced. With both steering levers folded out in the neutral position, the parking brake engaged and the blade clutch switch in the "off" position, sit in the operator's seat and start the engine. Turn the blade clutch switch to the "on" position and the blades should start to rotate. Raise up slightly off the operator's seat and the blades should stop. If the blades do not stop when you dismount from the operator's seat, the seat switch must be replaced.
   e. **Electric PTO Clutch:** This clutch operates when the engine is running, the operator is in the operator's seat and the blade clutch switch is turned on.This electric clutch is a fairly trouble free device. If a problem develops and the blades do not turn, first check the 7.5 amp fuse in the yellow, 16-gauge wire between terminal "L" (for the Gasoline Engine) on the ignition switch and the hour meter and then investigate the wiring harness and the connections to the seat switch, the blade clutch switch and

the electric blade clutch. Then check out the seat switch, the blade clutch switch and finally the electric blade clutch. If a problem still exists contact your cub cadet service dealer.

D.Tires

The two front wheels are caster wheels that are free to swivel to accommodate the direction of the Mower.

The two rear wheels are used to propel the Mower in the direction of input from the drive handles. Inflation pressure of the rear tires is important for stability while the Mower is in operation. If the tire diameter is not equal between the two tires, the Mower will pull to one side.

1. **Inflation Pressure:**
   a. Traction Tires—20 psi max; 8-10 psi recommended
   b. Front Caster Wheel—40 psi max; 20-25 psi recommended
   c. Cutting Deck Ball Wheels—Solid Polyurethane.

Use the Following guidelines for maintaining the tires:

   a. Balance inflation pressure between the rear tires to help maintain straight travel (see tire side wall for proper inflation pressure).
   b. Keep the valve caps tightened to prevent air pressure loss.

2. **Leaking Tires:** When a flat tire occurs, repair or replace immediately. The normal procedure is to remove the wheel and replace it with a spare. Take the leaking tire to a maintenance area and repair. If a tire is getting soft, park the mower on the nearest level, paved area. If the leaking tire is on a traction wheel, put blocks on each side of the opposite traction wheel and jack up the tire that leaks about an inch off the ground. Loosen and remove the lug nuts and remove the wheel. Mount a spare wheel and tire, replace the lug nuts, and using a torque wrench, tighten them to 60 ± 10 ft-lbs.

   If the leaking tire is on a front caster wheel, block both traction wheels and raise the caster wheel so that the tire is an inch off the ground. Loosen and remove the locknut from the axle assembly and pull the axle assembly from the caster yoke. The wheel and two spacer sleeves will drop free. Slip the axle assembly through one side of the caster yoke, through a spacer sleeve, a spare wheel, the other spacer sleeve and finally through the other side of the caster yoke. Then tighten the locknut on the end of the axle assembly.

   Lower the mower off the jack and continue mowing. The wheel with the leaking tire should be taken to the maintenance area, the tire inflated to 20 psi and the wheel placed in a large bucket of water. Carefully inspect the tire, rim and valve for escaping air bubbles which indicate a leak. Mark each leak with a yellow marking crayon and then deflate the tire to 8 psi and repeat the inspection. If the leaks you find are pin hole size to 1/16" diameter, the tire can be repaired using an aerosol can of tire inflater and latex sealer available from any auto supply store. Follow the directions on the can. If the leaks are larger than 1/16" diameter, the tire can be repaired with rubber plugs also available in a kit from any auto supply store. If the tire bead is damaged, a tube will have to be installed in the tire or the tire will have to be replaced.

3. **Creeping:** Creeping is the slight forward or backward movement of the mower when the throttle is on and the lapbars are in the opened-out position. If your mower creeps do the following.
   a. Jack up rear of unit.
   b. Place Lapbars in neutral opened-out position.
   c. Locate jam nuts. (Reference control assembly in parts list).
   d. Loosen jam nuts on both ends of rod connectors. See Control Assembly in the Illustrated Parts Book (ONLY if mower creeps.)
   e. Start unit and push throttle all the way on.
   f. If unit creeps forward rotate rear rod connectors counter-clockwise. And if unit creeps in reverse, rotate clockwise.

      Adjust the appropriate rod connector. The left rod for the left side of the mower and the right rod for the right side of mower. Afterward, retighten jam nuts.

E. Brakes

While the mower is in motion, all braking is performed dynamically through the hydraulic pumps and traction motors, controlled by the two steering levers. When the mower is parked with the engine shut off, the hydraulic system locks the traction wheels.

Note: If you wish to move the mower by pushing, you must release the dynamic braking. Locate the levers at the rear of the mower. Pull both levers out and lock in position. After pushing the mower to the desired location, return both levers to the operating position (See page 17 Figure 8).

When the mower is parked with the engine running and the steering levers opened out in the neutral position, the parking brakes should be applied. The parking brakes are disc-type brakes integrated into each transaxle.They are both engaged by the same operating lever.

1. **Adjustments:** The parking brake handle is an overcenter lever that should engage with moderate force.

   Note: To increase parking brake capacity tighten the brake rods going back to the brake arms equally. Tighten rods one full turn and check parking capacity. Repeat Step.

To adjust either brake individually, disconnect the brake rod from the brake arm by removing the cotter pin from the clevis pin and pulling the clevis pin from the brake clevis. Loosen the hex nut and turn the brake clevis in a clockwise direction one full turn looking down the brake rod. This will tighten the brake about .040 inch. Tighten the hex nut and reassemble the brake clevis to the brake shaft assembly. Normally, both brakes should be adjusted and equal amount.

2. **Repair:** The mower is equipped with internal wet disc brakes and will not normally require maintenance. If they are not working properly, please contact your service center.If thery are not working properly contact your cub cadet service dealer

F. Hydraulic System

1. **Hoses:** Check the hoses from the hydraulic oil tank to the transaxles daily for leaks or abrasion and replace any damaged hoses. Make certain there are no kinks or twists in any hose.
2. **Hydraulic Oil Tank and Filters:**

   Note: Change the hydraulic oil and the oil filter after 500 hours of operation and every 500 hours thereafter.

To drain the hydraulic oil tank and transaxles, place a 2 gallon drain pan under the transaxles. Remove the filters, drain the transaxles and the tank. Remove the filters by unscrewing in a counterclockwise direction. The filters will be full of oil, so empty each into the drain pan. Coat the filter seal with Shell Rimula 15W40 oil or equivalent. Screw the filter onto the filter base until it seats, and then add another one-half turn to seal.

Note: Always wipe off the hydraulic tank fill cap and the area around it before removing the cap to prevent dirt from contaminating the oil.

Remove the fill cap and fill the tank with the same 15W40 oil selected for the filter until the oil level is up to the level of the mark on the tank. Leave this air space for expansion. Start the engine and let it run at idle for about five minutes. Check the filters for leaks. Idling the engine and the transaxles in this way will purge any air from the system. Shut off the engine and recheck the oil level in the tank. Top-off if necessary until the oil level is up to the mark on the tank.

Note: After unit is up to operating temperature, turn off engine and re-check hydraulic oil. If oil appears foamy or contains excessive air bubbles, DO NOT OPERATE UNIT. Contact Cub Cadet Service Dealer.

3. **Hydrostatic Transmissions and motors:** The pumps are the hardest-working components in the hydraulic system. They are in operation all the time the engine is running. Because of extremely close tolerances, wear is an important factor in their life. ***Contaminants*** in the hydraulic oil does the greatest harm to the pumps.

   Contaminants or foreign matter in the oil will damage the pumps . To prevent this, use a filter that captures particles as small as 30 microns or 30 millionths of a meter in diameter. You can help in the battle against dirt by being very careful when you remove or repair a component in the hydraulic system. Thoroughly clean off any component before you work on it. Plug the ends of any hose or line you remove with a rubber or plastic plug. Use plastic caps to seal off the ends of hydraulic fittings. Place any component you remove in a clean plastic bag so it can't pick up dust or dirt. Clean your hands frequently when working on the hydraulic components.

   Note: The transaxles are not owner-repairable. If a transaxle fails, contact your Cub Cadet Service Dealer. Do not disassemble the transaxle.

4. **Steering Lever Adjustments:** Place the mower on level ground with the engine running, parking brake off and steering levers opened out to the neutral position. If the

Mower begins to creep, adjust the Steering Levers.

If the mower creeps, first determine whether it creeps to the right or left side and which direction the mower moves — to the front or the rear. To make the adjustment, place the steering levers in the opened-out neutral position and set the parking brake, shutoff the engine, take the key from the ignition switch and pivot the seat forward. If the mower creeps to the right, you will adjust the linkage on the left side of the mower and vice-versa. Remove the cap screw and lock washer that secure the linkage control arm rod end bearing to the control lever pivot. Loosen the jam nut which prevents the rod end bearing from turning. If the mower creeps forward, thread the rod end bearing one-half turn clockwise into the linkage control arm. If the mower creeps backward, thread the rod end bearing one half turn counterclockwise out of the linkage control arm. Then tighten the jam nut and reconnect the rod end bearing to the control lever pivot by replacing the cap screw and lock washer.

After adjusting the steering linkage, swing the seat back to its normal position and place the steering lever on the side you adjusted up to the operating position. If you feel a slight push forward or a slight pull backward from the neutral position you must adjust the lever return assembly. To do this, swing the steering lever back out to the neutral position, pivot the seat forward and loosen the jam nut on the lever return rod where it is threaded into the hex-shaped end of the lever return bolt. If the steering lever was pushed forward, turn the hex-shaped lever return bolt clockwise one-half turn off of the lever return rod. If the steering lever was pulled back, turn the hex shaped lever return bolt counterclockwise one-half turn onto the lever return rod. Then tighten the jam nut, pivot the seat back into the operating position and start the mower to check that your adjustments were made correctly.

G. Storage

1. **General:** If your mower will not be in service for a few months, it should be stored in a dry location that is not subject to drastic changes in temperature. Before storing, the following maintenance procedures should be performed.

   a. Clean the mower. The entire tractor and cutting deck should be washed and cleaned.
   b. Sharpen the blades so that the mower will be ready to use when needed.
   c. Protect the metal surfaces. Repair scratches with the appropriate touch-up spray paint. Brush a rust preventive oil on any unpainted surfaces including the pulleys and blades. (Be careful not to get any oil on the drive belts.)
   d. Lubricate the mower.
   e. Drain the engine oil. The engine should be warm so that all the oil drains. Replace the engine oil filter and refill the crankcase with fresh oil.
   f. Gasoline Engine: Drain all the fuel. Close the fuel tank shutoff valve. Disconnect the fuel line from the carbuetor and put the end into an approved fuel container. Open the fuel tank shutoff valve and drain the fuel tank and line into the approved container. Replace the fuel line on the carburetor. Start the engine and allow it to run out of fuel. This will prevent gum and varnish deposits from forming. Replace the fuel filter.
   g. Gasoline Engine Only: Remove the spark plugs and pour approximately one ounce of oil into each cylinder. Crank the engine one or two turns to spread the oil evenly on the cylinder walls. Replace the spark plugs.
   h. Clean the battery and make sure it is fully charged.
   i. Inspect the hydraulic hoses, lines and fittings. Replace as necessary.
   j. Jack the mower up and store it on blocks to take the weight off of the tires.

2. **To Put the Mower Back in Service:**

   a. Check the battery. Charge if necessary.
   b. Gasoline Engine Only: Remove the spark plugs and wipe them off. Using the starter, crank the engine to pump the excess oil out of the spark plug holes. Replace the spark plugs and the ignition leads. Refill the fuel tank with fresh gasoline.
   c. Check the level of the oil in the crankcase and the hydraulic tank.
   d. Lower the mower off the block and check the tire pressure.
   e. Push the mower outdoors and start the engine. Let the engine idle until it has warmed up completely (4 to 5 minutes).

MAINTENANCE SCHEDULE

A. Daily Checks

1. **Before starting engine:**
   a. Check the fuel level.**
   b. Check the engine oil level.**
   c. Check the hydraulic oil level.
   d. Check the hydraulic hoses for leaks, abrasion, kinks, twists, or a flattened condition.
   e. Check the tires and tire pressure.
   Drive Tires: 8-10 psi.
   Front Caster Wheels: 20-25 psi.
   f. Check the spindle belt, the mower drive belt and the hydro drive belt.
   g. Check the blades. Make sure they are sharp and that the blade securing cap screws are tight.
   h. Check the cutting height.
2. **When ready to start the engine:**
   a. Check the five safety switches for proper operation.
3. **After mowing:**
   a. Clean the mower.
   b. Clean the engine air screen.
   c. Oil the wear points. Follow the Oiling Chart.
   d. After the first five hours, Change the engine oil and engine oil filter.

B. Every 25 Hour Checks

1. Service the engine foam element air pre-cleaner.*
2. Grease the three spindle bearings.

C. Weekly or Every 50 Hour Checks

1. Change the engine oil. (Every 25 hours under heavy duty operation.)
2. Clean or replace the engine's paper air cleaner element.*
3. Check the battery's electrolyte level.
4. Clean the engine cooling fins and external surfaces.*
5. After the first 500 hours, change the hydraulic oil and the hydraulic oil filter. Change them every 500 hours thereafter.
6. Oil wear points. **Follow the Oiling Chart.**
7. Lubricate all grease fittings. **Follow the Lubrication Chart.**

D. Every 100 Hour Checks

1. Change the engine oil filter. (Every 50 hours under heavy duty operation.)
2. Check the engine spark plugs.
3. Check the air gap on the blade brake clutch (PTO Clutch) and if it exceeds 0.025" adjust to 0.012" - 0.015".

E. Yearly Checks

Check the oil in the hydraulic reservoir.

*** Perform maintenance more frequently under dusty conditions.**

****Reference Engine Owner's Manual**

.

OIL CHART

Apply a few drops of engine oil or use a spray lubricant. Apply the oil to both sides of pivot points. Wipe off any excess. Start engine and operate mower briefly to insure that oil spreads evenly.

Number of Oil Points	*Description*
DAILY	
4	Deck Suspension Pivots
4	Height Adjustment Turnbuckle Clevis Pin
2	Height Adjustment Handle Pivots
2	Height Adjustment Stop Pivots
2	Deck Lift Linkage Pivots
2	Transport Handle Pivots
1	Transport Handle Pin
2	Deck Frame Up-and-Down Pivots
WEEKLY	
1	Seat Hinge
2	Steering Lever Linkage Rod End Bearings
2	Lever Return Assembly Rod End Bearings
2	Pump Control Lever Pivots
1	Brake Lever Pivot Clevis Pin
1	Brake Lever Control Rod Pivot
1	Brake Control Rod Swivel Joint
4	Brake Rod Clevis Pins
2	Brake Shaft Assembly Pivots
2	Grass Collection System Lid Hinges **(If Mower is so equipped)**

LUBRICATION CHART

Use a grease-gun filled with NO. 2 Multipurpose Lithium Base Grease

No. of Grease Fittings	*Description*
EVERY 25 HOURS	
3	Blade Spindle Bearings
WEEKLY	
2	Front Caster Wheels
2	Front Caster Wheel Spindles
4	Mowing Deck Pivots
2	Deck Take-Up Idler Pivots
1	Axle Pivot
4	Steering Lever Pivots
1	Hydro Take-up Idler Pivot
1	Park Brake Pivot
2	Mower Deck Ball Wheels

Performance Adjustments

A. High Speed Tracking Adjustment

If mower tracks to one side with both lap bars in fully forward position:

1. Check air pressure in all four tires:
   a. Pressure should be within specified ranges and balanced side-to-side.
   b. Rear tires 8-10 psi. recommended (20 psi MAX.)
   c. Front tires 20-25 psi. recommended (40 psi MAX.
2. Check hydraulic fluid level (Ref. Engine owner's manual)
3. Verify that the mower does not creep when the engine is running, the lap bars are in the neutral position and the parking brake is released. (Refer to section D-3 on page 19 of this manual if this condition exists).
4. Recheck the tracking after any adjustments based on the above.
5. If uneven tracking persists, adjust as follows. (see Fig. 10)
   a. Unit tracks to the RIGHT, adjust Left lap bar stop bolt to make it longer.
   b. Unit tracks to the LEFT, adjust Right lap bar stop bolt to make it longer.
6. Re-check the tracking and make any fine tuning adjustments to the lap bar stop bolts as required.

Note: If stop bolt is adjusted too far, tracking problem will change sides. Make the fine tuning adjustments by shortening the same bolt.

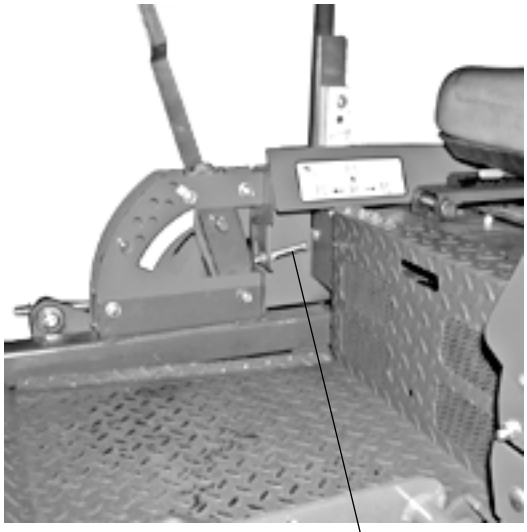

Figure. 9

B. Enginge RPM Check and Adjustment

Description	High RPM Spec.	Low RPM Spec.
23 HP Kohler	3750 +/-75	1650 +/-100
NOTE: RPM Specs. are for free running engines under no load.		

1. Verify that the lap bars are in the neutral position, the parking brake is on, and the PTO drive is disengaged.
2. Start the mower and let it run at approximately half throttle for 3-5 minutes to bring the engine up to operating temperature.
3. Locate the Hour Meter/Tachometer/ Service Minder display on the right hand operator control panel. (see Fig.1 on page 8 of the manual) This display defaults to Tachometer mode when engine is running.
4. Move the throttle lever to the high speed position and note the RPM reading on the display.
5. Move the throttle lever back to the low speed position and again note the displayed RPM's.
6. Compare these noted RPM readings to the specifications in Table 1, for the engine that is on your mower.
7. If the readings do not correspond to the ranges in the table, refer to the engine owner's manual for the proper adjustment procedures.
8. If adjustments per the engine operator's manual do not result in proper RPM readings, contact your service technician.
9. Note: The throttle cable sheath may shrink or slip over time, changing the relationship between the throttle lever on the left hand operator control panel and the throttle arm on the engine. To readjust the throttle cable:
   a. Make sure the engine is off, place lap bars in the neutral position, set the parking brake, and disconnect and ground both of the spark plug wires.
   b. Locate and loosen the cable clamp on the engine throttle plate.
   c. Place the operator's throttle lever to the high speed position and then slide the cable through the clamp until the throttle arm is in the full throttle position. (Ref. Engine owner's manual)
   d. Tighten the cable clamp.
   e. Move the operator's throttle lever between high and low speed and verify that the engine throttle arm also moves through it's full range of motion.
   f. Repeat as required to obtain proper throttle adjustment.
   g. Verify proper throttle adjustment by checking RPM readings as outlined above.

C. Deck Corner Ball Wheel Roller Settings

1. Matching the set heights of the ball rollers on the four corners of the mower deck to the desired cut height will prevent edge scalping and minimize any side-to-side variance in cut height.
2. There are three height adjustment holes in the bracket that mount the ball rollers to the deck.
   a. Use the top set of holes for cut heights of 2 inches or lower.
   b. Use the middle set of holes for a 2-1/2 - 3-1/2 inch cut height.
   c. Use the bottom set of holes for cut heights of 4 inches or higher.

D. Deck Center Anti-Scalp Roller Settings

1. The front and rear rollers help prevent the scalping of high spots and uneven terrain across the center section of the deck.
2. The rollers on the front of the deck are fixed at the factory and can not be adjusted.
3. The rollers on the rear of the deck can be adjusted downward one inch.
   a. Lowering the roller will increase the striping effect left behind the mower.
   b. This positioning of the rear roller will also help to filter the mulched grass clippings into the turf.
   c. Roller should not be lowered if the cut height is set at 2-1/2 inches or lower.

E. Lap Bar Adjustment

1. Proper lap bar and seat adjustment will result in the following:
   a. In the neutral position with hands on the lap bars,
      1. Operator's upper arms should be relaxed and approximately vertical.
      2. Operator's forearms should be approximately vertical.
   b. In the full forward position,
      1. Operator's back should stay in contact with the seat back.
      2. Lap bars should not contact operator's legs.
   c. In the full reverse position,
      1. Lap bars should not contact the operator's legs or torso.
2. Set the seat to the preferred operating position.
   a. Adjustment lever is located under the front edge of the seat.
   b. The seat has five inches of front-to-rear adjustment available.
4. Check factory settings of lap bars for the conditions listed above.

   Note: If lap bar adjustments are required, height adjustments should be made prior to angular adjustments.
5. To adjust the height of the lap bars,
   a. Remove the nuts from the lap bar mounting bolts (see Fig. 11).
   b. Remove the bolts and lap bar and repostion to the seconc set of holes in the mounting block.
   c. Replace the bolts and nuts and tighten to 28-34 ft-lbs.
      1. If angular adjustments are also required, nuts can be tightened until snug at this point.
   d. The same adjustments should be made to both sides of the mower.
6. **(Optional lapbars only)** To adjust the front-to-rear angle of the lap bars,
   a. Loosen the nuts on the lap bar mounting bolts, leaving the bottom one fairly snug.
   b. The top hole is slotted, allowing the lap bar to pivot on the bottom bolt.
   c. Move lap bar to the desired angle and tighten the nuts to 28-34 ft-lbs.

   Note: In the neutral position, the handles of the lap bars should be aligned with approximately a one inch gap between the tips. Adjus the gap by adding shim washers to the top mounting bolt between the lap bar and the mounting block.
   d. Check the results of any adjustments to the conditions described in section a, above. Repeat any adjustment procedures as required until all conditions are met.

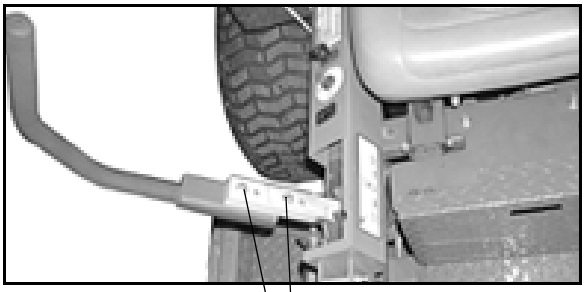

Figure. 10 *Lap Bar Mounting Bolt and Nuts*

F. Deck leveling Procedure

1. Park the mower on a flat paved surface, engage the parking brake, shut off the engine, remove the key from the ignition switch, disconnect the spark plug wires and using the transport lever, lower the mowing deck into the 4" height of cut position. (The 4" height of cut position is recommended in order for one to see and obtain a measurement. Any height of cut position is acceptable as long as a proper measurement can be taken.)
2. Check the right and left front tire pressure. Adjust as necessary to 20-25 psi. Tire pressure can affect blade height by as much as a 1/4".
3. Check the right and left rear Drive tire pressure. Adjust as necessary to 8-10 psi.
4. Measure blade-to-ground height at the front tip of the right blade. To obtain an accurate measure, align blades in parallel with mower centerline, (i.e. front to back).
5. Measure blade-to-ground height at the front tip of the left blade. Be sure to measure at the blade tip with the blades arranged in proper position.
6. To level the deck, adjust the eyebolt at the left front of the deck (Point B) so that the blade-to-ground height at the right front blade tip matches that of the left front blade tip. This is done by loosening the jam nuts on the eyebolt and tightening the upper nut to raise the deck and loosening the nut to lower the deck. The right front blade tip height is fixed so you must adjust the left front tip to match it.
7. Measure the blade-to-ground height at the right rear blade tip. Again be sure to measure at the blade tip at the rear of the right blade when aligned along the mower centerline. The blade-to-ground height at the rear of the blade tip should be 1/8" to 1/4" higher than the front tip. This is referred to as blade pitch. The sam height difference should be true for the left blade, measured front and back.
8. To adjust the blade pitch the deck pitch must be adjusted. Loosen the inner jam nuts at the rear of the horizontal threaded rods. Start at Point C to raise the rear of the deck, tighten the rear outer jam nut to raise the deck pitch. Adjust the rear jam nut at Point D to take the "slack out of the threaded rod.
9. The final adjustment would be to take the "slack" out of the left rear linkage (Point D) by adjusting the jam nuts on the eyebolt. Loosen the jam nuts and tighten the upper nut to remove "slack".
10. In many cases it will be necessary to adjust deck height using both eyebolt adjustments and pitch adjustment to achieve the correct blade-to-ground heights. If you remember that the front right blade tip adjustment is fixed and you level to that height, adjusting the decks will be simplified.

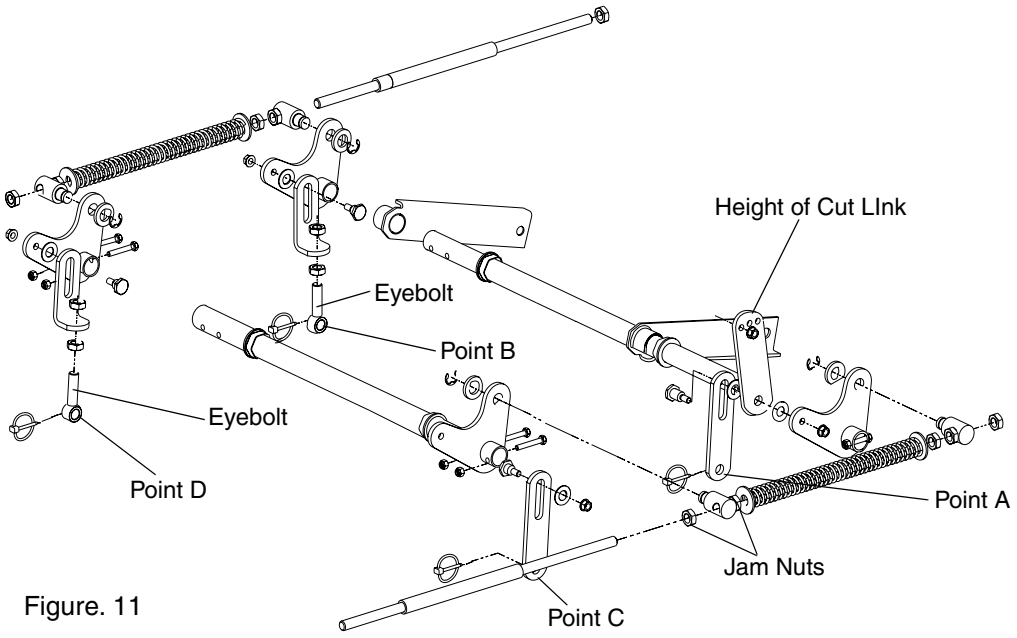

Figure. 11

WIRING DIAGRAM

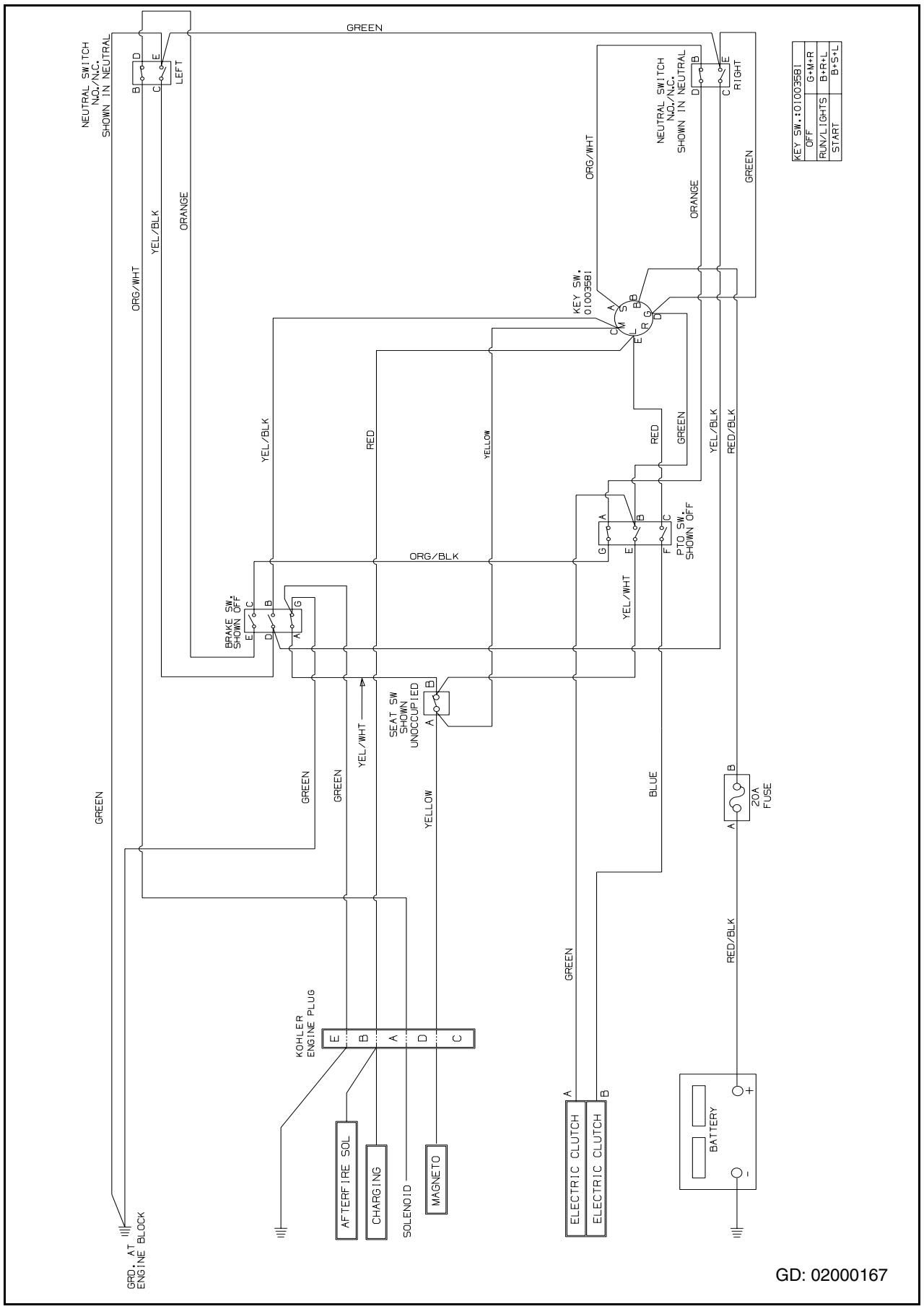

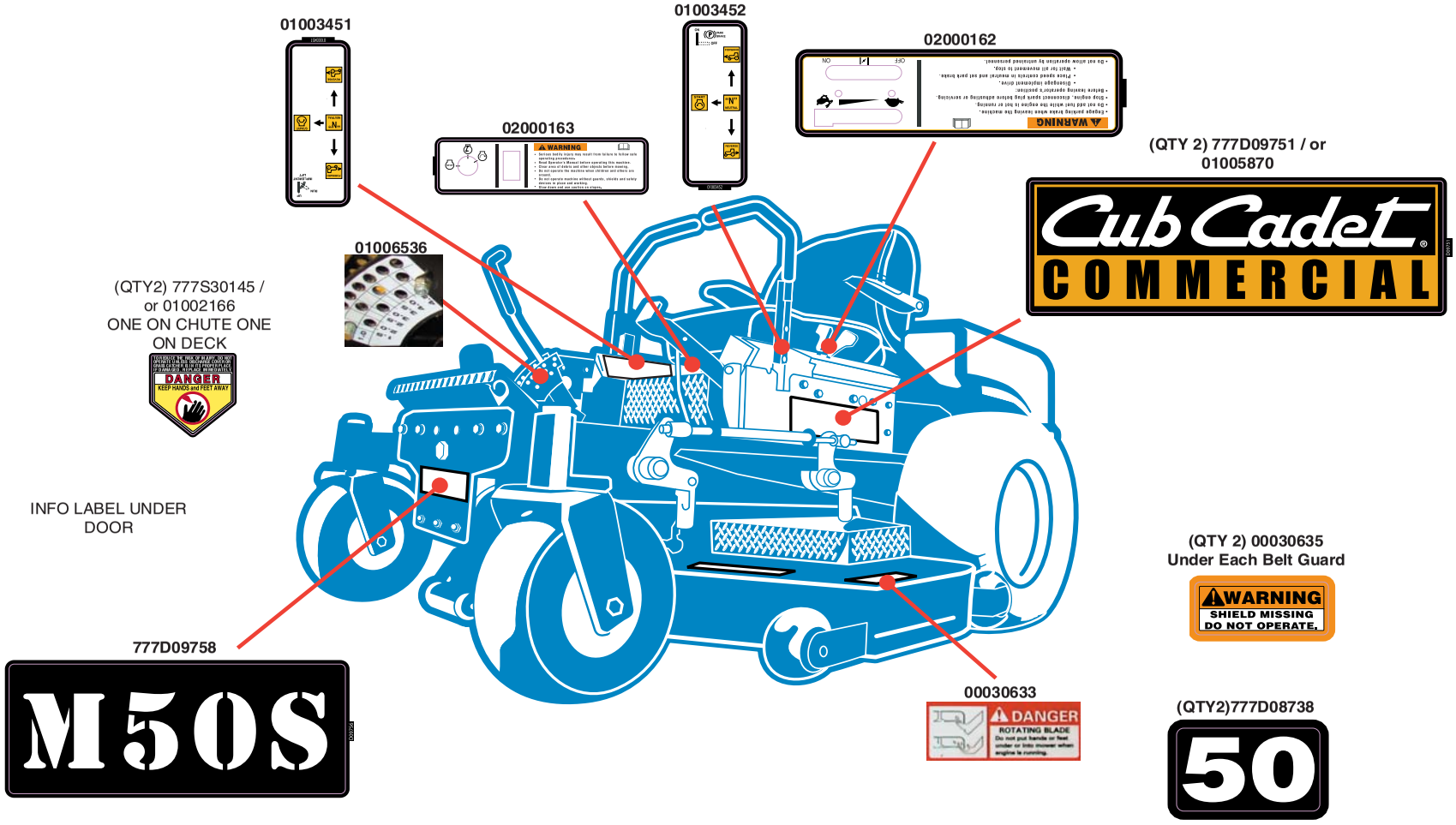
01003451
01003452
02000162
02000163
(QTY 2) 777D09751 / or
01005870
Cub Cadet
COMMERCIAL
01006536
(QTY2) 777S30145 /
or 01002166
ONE ON CHUTE ONE
ON DECK
DANGER
KEEP HANDS and FEET AWAY
INFO LABEL UNDER
DOOR
777D09758
M50S
00030633
DANGER
ROTATING BLADE
(QTY 2) 00030635
Under Each Belt Guard
WARNING
SHIELD MISSING
DO NOT OPERATE.
(QTY2)777D08738
50

MAINTENANCE RECORD

DATE	WORK PERFORMED	DATE	WORK PERFORMED

MAINTENANCE RECORD

DATE	WORK PERFORMED	DATE	WORK PERFORMED

EQUIPMENT TWO-YEAR LIMITED WARRANTY

This warranty is specific to the product manual it is attached to.
For a complete list of products and warranties contact your Cub Cadet dealer.

Proper maintenance of your Cub Cadet equipment is the owner's responsibility. Follow the instructions in your owner's manual for correct lubricants and maintenance schedule. Your Cub Cadet dealer carries a complete line of quality lubricants and filters for your equipment's engine, transmission, chassis and attachments.

1. What Is Covered By This Warranty. This limited warranty covers any defect in materials or workmanship in your Cub Cadet equipment for two year from the date of purchase for the first user purchaser. Cub Cadet will replace or repair any part or parts without charge through your authorized Cub Cadet dealer. Batteries, belts and tires will be covered for a period of ninety (90) days from date of purchase. Engine warranties beyond listed coverage, if available, is handled directly with the engine manufacturer.

2. What Is Not Covered By This Warranty. Cub Cadet does not warrant (a) routine maintenance items such as lubricants, filters (oil, fuel, air and hydraulic), cleaning, tune-ups, brake or clutch inspection, adjustments made as part of normal maintenance, blade sharpening, setup and normal wear. (b) incidental costs such as transporting equipment to and from the dealer, telephone charges or renting a product temporarily to replace a warranted product. (c) damage caused by use of the equipment for purposes other than those for which it was designed; (d) damage caused by accident or disasters such as fire, flood, wind and lightning; (e) damage caused by unauthorized attachments or modification; or (f) any other abuse or misuse of the equipment.

3. EXCLUSIVE WARRANTY. THE FOREGOING WARRANTY IS EXCLUSIVE AND IN LIEU OF ALL OTHER WARRANTIES OR REMEDIES, WHETHER WRITTEN, ORAL OR IMPLIED. ANY AND ALL IMPLIED WARRANTIES OF MERCHANTABILITY, FITNESS FOR A PARTICULAR PURPOSE, COURSE OF DEALING OR USAGE OF TRADE ARE HEREBY EXPRESSLY DISCLAIMED AND EXCLUDED.

4. LIMITATION OF REMEDIES. UNDER NO CIRCUMSTANCES, EXCEPT TO THE EXTENT PROHIBITED BY APPLICABLE LAW, SHALL Cub Cadet BE LIABLE FOR ANY LOSS OR DAMAGE, DIRECT OR INDIRECT, SPECIAL, INCIDENTAL OR CONSEQUENTIAL ARISING OUT OF THE USE OF OR INABILITY TO USE THIS EQUIPMENT INCLUDING BUT NOT LIMITED TO ANY CLAIM FOR LOSS OF PROFITS, LOSS OF SAVINGS OR REVENUE, LOSS OF USE OF THE EQUIPMENT OR ANY ASSOCIATED EQUIPMENT, FACILITIES OR SERVICE, DOWNTIME, THE CLAIMS OR COSTS OF THIRD PARTIES INCLUDING CUSTOMERS, AND INJURY TO PROPERTY.
Some states do not allow limitations on how long an implied warranty lasts or the exclusion or limitation of incidental or consequential damages, so the above limitations or exclusion may not apply to you. This warranty gives you specific legal rights, and you may also have other rights which vary from state to state.

5. Future Changes. Cub Cadet reserves the right to reserve, change or modify the construction and design of its Equipment or any component part or parts thereof without incurring the obligations to make such changes or modifications in present equipment.

6. How to Obtain Service: Contact the authorized Cub Cadet dealer at the point of original retail purchase to obtain service or replacement parts. If you need further assistance in finding an authorized Cub Cadet servicing dealer, contact:

Cub Cadet Corporation
P.O. Box 368023
Cleveland, OH 44136