Cub Cadet COMMERCIAL

Hydrostatic Zero-Turn Riding Mower

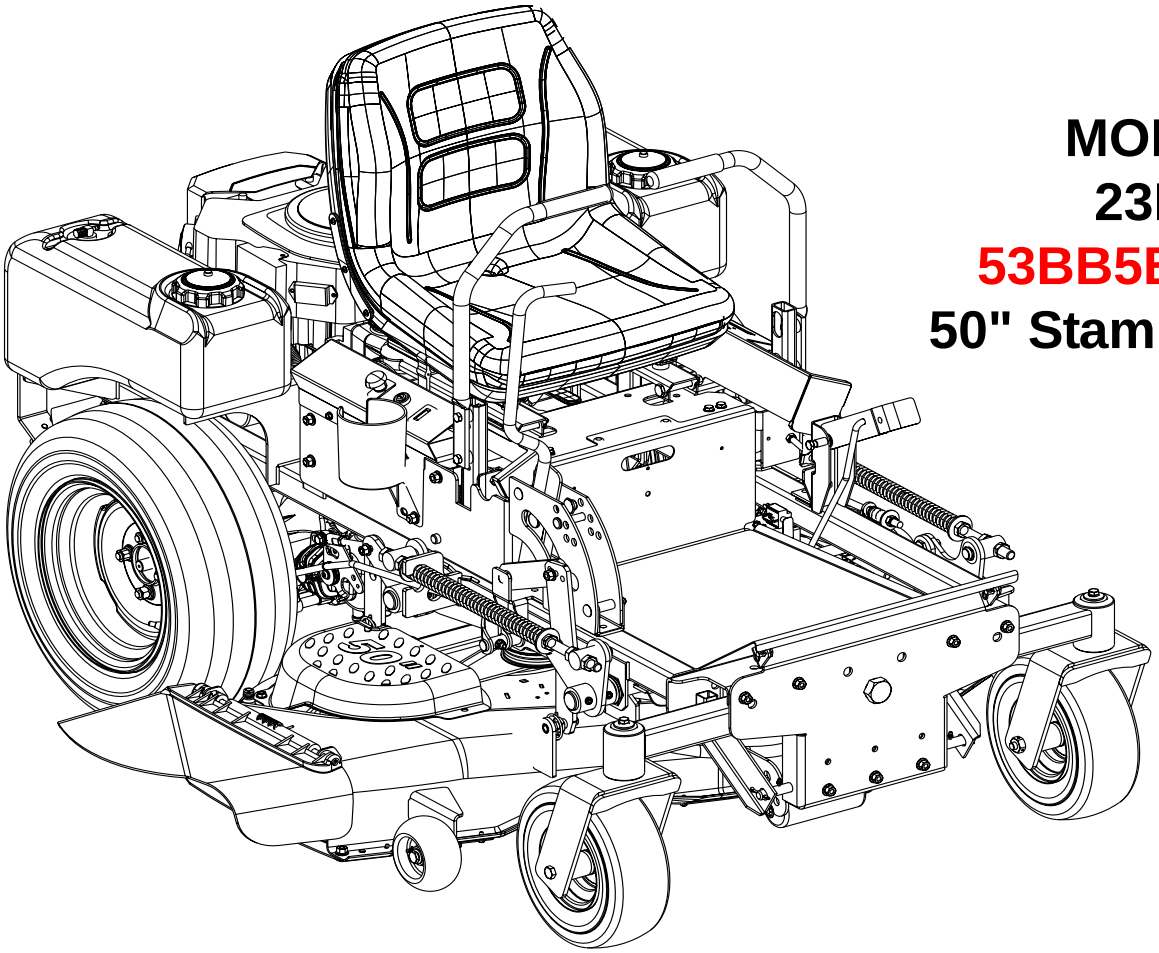

MODEL
23HP
53BB5BBP750
50" Stamped Deck

ILLUSTRATED PARTS LIST

TABLE OF CONTENTS

Frame Assembly 3
50" Formed Cutter Deck . . . . . 4 and 5
Brake Assembly . . . . . 6 and 7
Fuel Tank Assembly 8
Rear Bumper 9
Front Caster Assembly 10
Wheel Assembly 11
Control Assembly . . . . . 12 and 13
Drive Assembly 14
Seat Assembly 15
23 HP Kohler Engine Assembly . . . . . 16 and 17
23 HP Electrical Engine Assembly 18
Floor Panel Assembly 19
Lift Assembly . . . . . 20 and 21

Frame Assembly- Figure 1 and Parts List

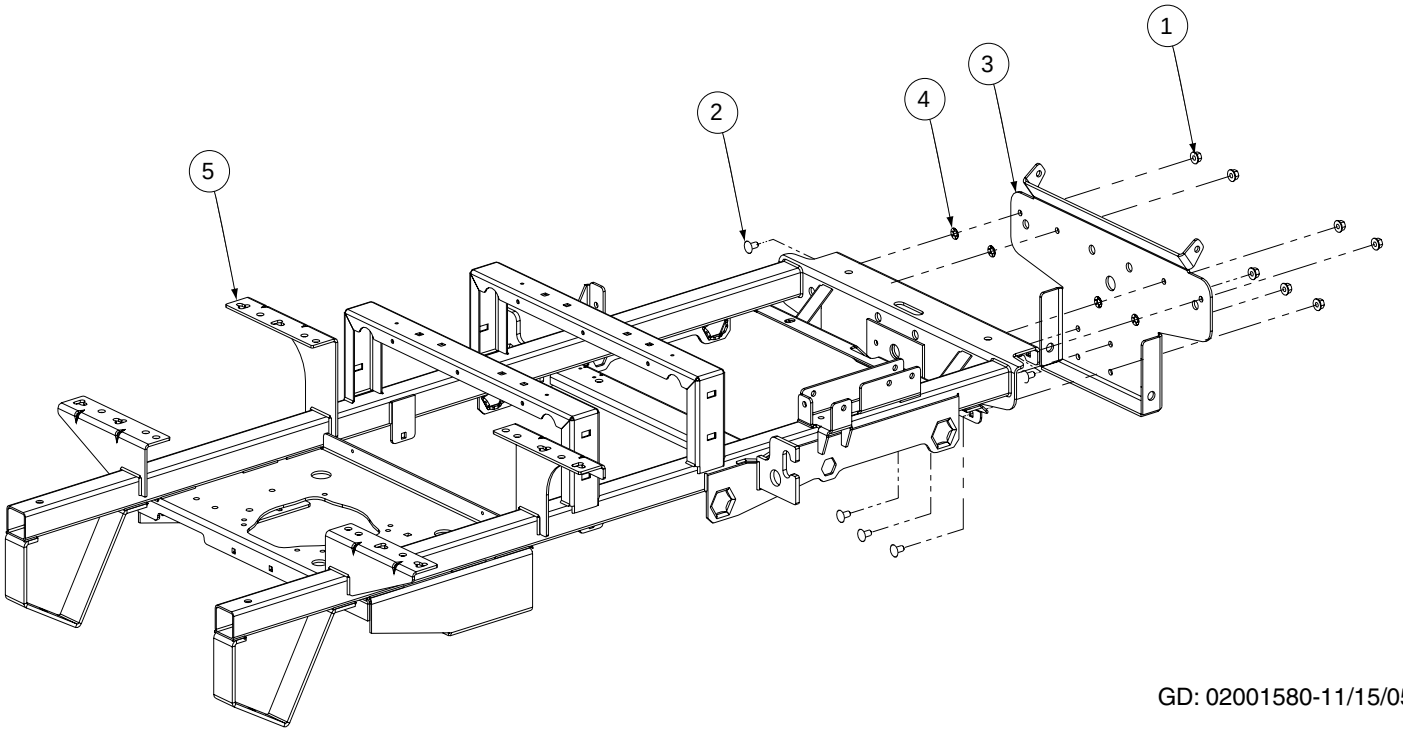

GD: 02001580-11/15/05

Ref. No.	Part No.	Description	Qty.
1	00022560	Hex Nut, 3/8-16 Flange Lock	7
2	01000372	Carriage Bolt, 3/8-16 x .75 Long	7
3	01001713	Bracket Assembly, Frame, Front	1
4	01008225	Push Retainer, 3/8"	4
5	02001586	Frame Assembly	1

50" Formed Cutter Deck - Figure 2

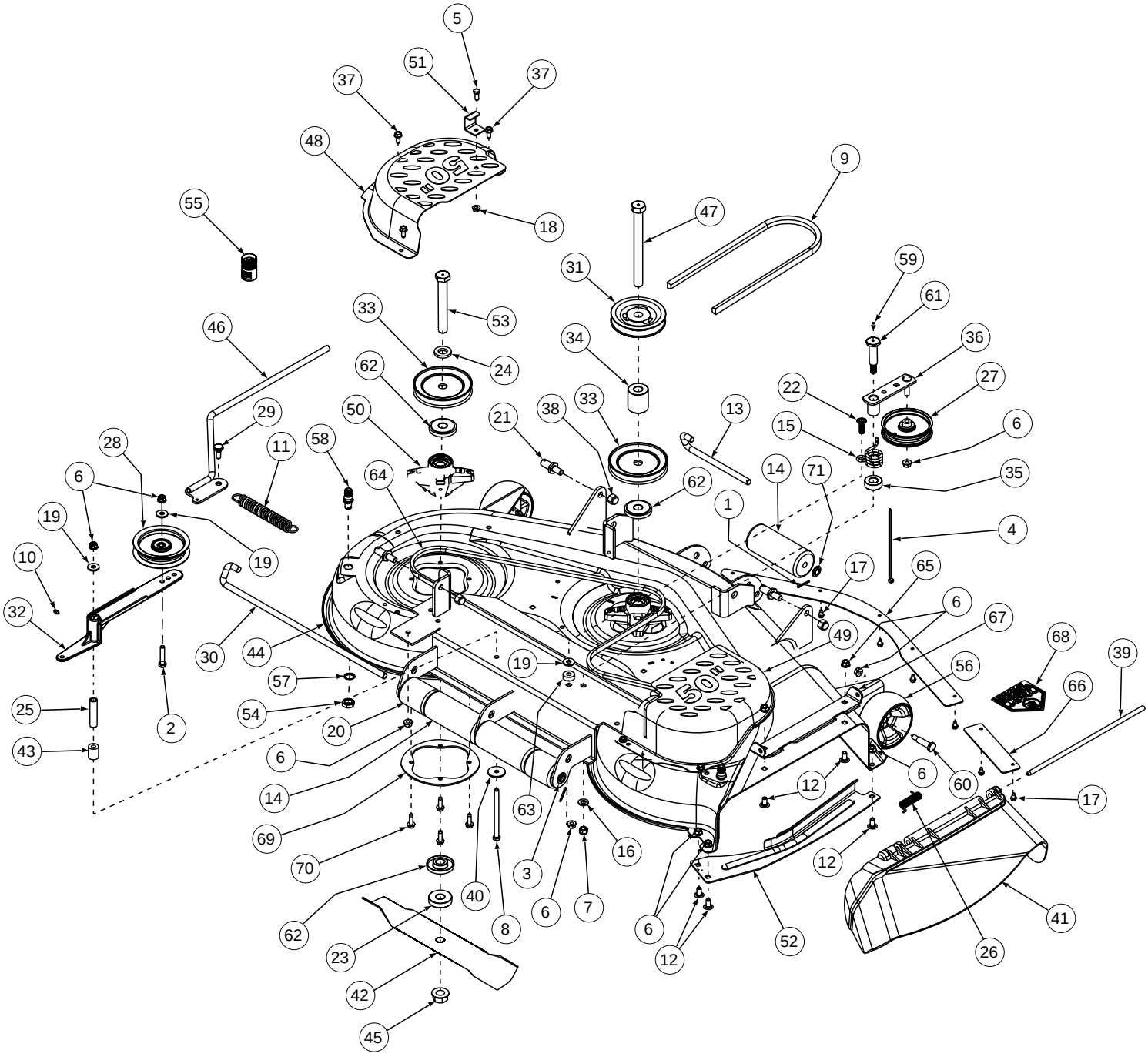

GD: 02000420-03/13/06

50" Formed Cutter Deck - Parts List for Figure 2

Ref. No.	Part No.	Description	Qty.	Ref. No.	Part No.	Description	Qty.
1	00003107	Cotter Pin, .125 Dia x 1.0	2	36	01008593	Idler Arm Assembly	1
2	00008495	Capscrew, 3/8-16 x 1-3/4	1	37	01008620	Self Tapping Screw 5/16-18 x .750	6
3	02000864	Push Nut,.480 ID X 1.00 OD	2	38	00012428	Hex Nut, 1/2-13, Insert Lock	4
4	00012470	Cable Tie, 3/16 x .05 x 7.4	1	39	01009102	Hinge Pin, .375 x 14.06	1
5	00013406	Hex Cap Screw, 5/16-18 x 3/4	1	40	01009253	Flat Washer, .390 x 1.5 x .134	1
6	00022560	Hex Nut Flange lock, 3/8-16	12	41	01009705	Chute Deflector	1
7	00027279	Nut 7/16-14, Nylock	1	42	01010168	Hi-Lift Blade, 17.9	3
8	00034167	Hex Cap Screw, 3/8-16 x 5.00	1	43	01010173	Spacer, .39 ID x .875 OD x 1.00	1
9	01005011	V-Belt, B-Section	1	44	02000407	Deck Assembly 50"	1
10	00060078	Grease Fitting, 1/4-28 x 3/16	1	45	02000402	Flange Hex Nut, 3/4-16	3
11	01009635	Extension Spring, 1.0 OD x 5.00	1	46	02000416	Spring Tension Rod Assembly	1
12	01000372	Carriage Bolt, 3/8-16 x .75 Lg	5	47	02001296	Hex Cap Screw, 3/4-16 x 8.00	1
13	01000375	Roller Pin, 1/2 Dia x 7.31 Lg	1	48	02000626	Left Hand Belt Cover	1
14	01000385	Front and Rear Roller	3	49	02000667	Right Hand Belt Cover	1
15	01000387	Torsion Idler Spring	1	50	618-04426	Blade Spindle Assembly	3
16	01000393	Flat Washer, .469 ID x .875 OD x .105	1	51	01004109	Tension Rod Stop Bracket	1
17	01000628	Screw, TT, 1/4-20 x .5, Hex Index Washer	7	52	02000830	Finger Guard	1
18	01000635	Hex Flange Lock Nut, 5/16-18	1	53	01006590	Spindle Bolt 3/4-16 x 5.50	2
19	01000723	Flat Washer, .406 ID x 1.0 OD x .105	3	54	712-0641	Hex Nut, M16-1.5	2
20	01001169	Short Roller	2	55	721-04041	Adaptor, Water Nozzle	1
21	01001745	Pin, 5/8 Dia x 1.2 Lg	4	56	703-1890	Deck Wheel, 5.00 Dia.	2
22	01002010	Carraige Screw, 3/8-16 x 1.25	1	57	736-0760	Lock Washer, 17 x 23.8 x 1.9	2
23	01002564	Spacer, .76 ID x 2.00 OD x .477	3	58	737-04003B	Nozzle, Deck Water	2
24	01003123	Spacer, .812 ID x .218 Lg.	2	59	737-3000	Grease Fitting	1
25	01003245	Spacer, .39 ID x .625 OD x 2.75	1	60	738-3056	Shoulder Screw .498 x 1.53	2
26	01003253	Torsion Spring	1	61	738-3172	Shoulder Screw .68 x 2.11	1
27	01004081	Flat Pulley with Flanges	1	62	748-3065	Spindle Spacer	6
28	01004101	Idler Pulley, 4.06 OD with Deep Flange	1	63	750-3119	Spacer .406 ID x 1.00 OD x 0.38	1
29	01004118	Shoulder Screw, .50 x .27 Lg; 3/8-16	1	64	02000653	V-Belt, 1/2 x 91 LG	1
30	01004751	Roller Pin Rod	1	65	02000668	Skirt, Center, 50"	1
31	01005201	V-Pulley, 4.75 OD	1	66	02000669	Skirt, Right Hand, 50"	1
32	02001855	Idler Arm Assembly, Flat Top Bearing	1	67	783-04470	Chute Mounting Bracket	1
33	01006535	Pulley, A Sect x 4.90	3	68	777S30145	Decal, Danger Hands & Feet	1
34	01006680	Spacer, .760 ID x 1.75 OD x 1.969	1	69	02000813	Spindle Plate	3
35	01008456	Spacer .760 ID x 1.5 OD	1	70	02000762	Self Tapping Screw 5/16-18 x 1.00	12

Brake Assembly - Figure 3

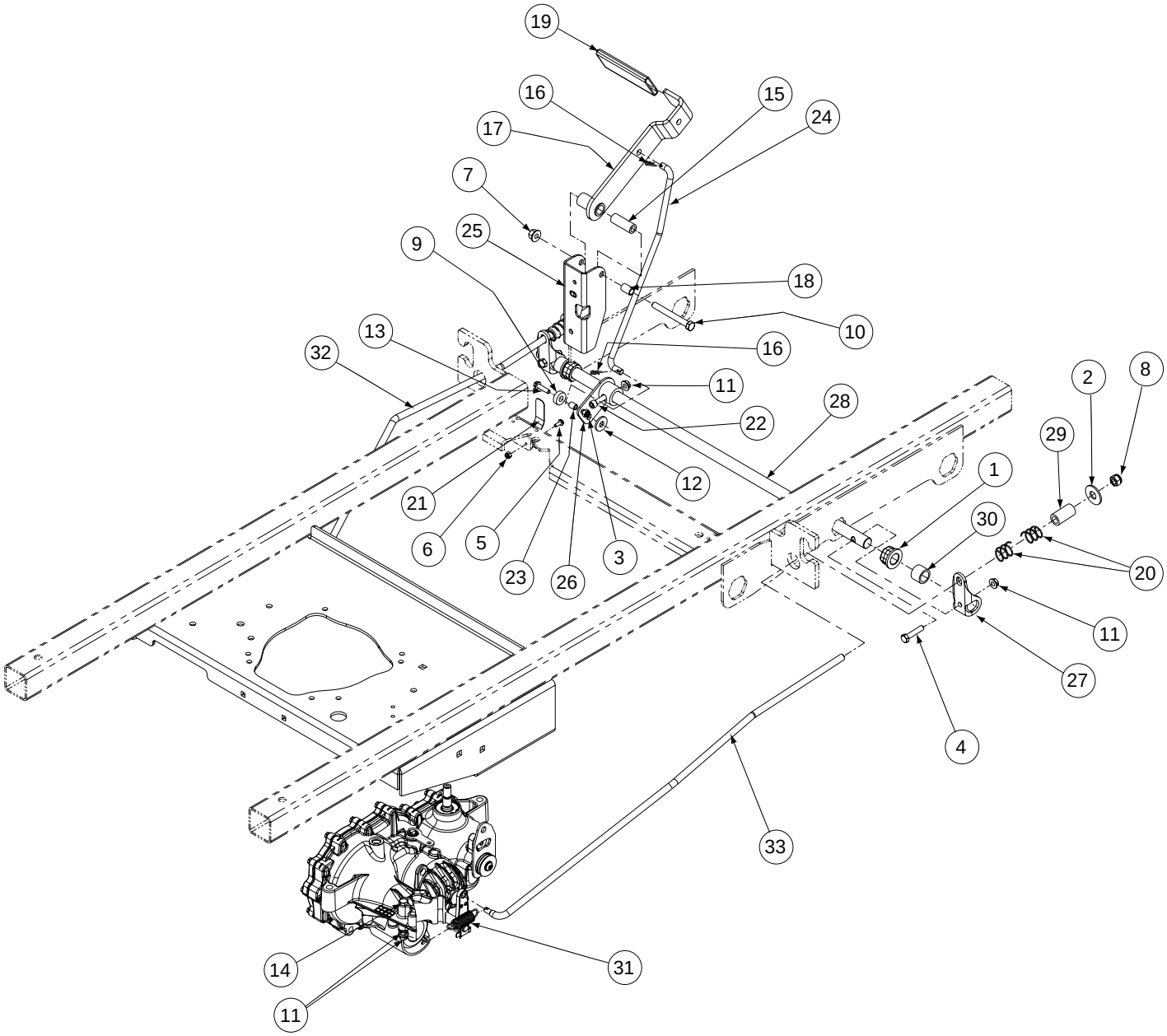

GD: 02001585-12/08/05

Brake Assembly - Parts List for Figure 3

Ref. No.	Part No.	Description	Qty.
1	741-0598	Hex Flange Bearing, .752 ID	2
2	00011459	Washer, 1/2	2
3	00012152	Lock Nut, Nylon Insert, 1/4-20	1
4	00012382	Hex Cap Screw, 5/16-18 x 1-1/2	2
5	00013669	Screw, Hex Washer, 10-32 x 1/2	1
6	00014608	Lock Nut, Nylon Insert, 10-32	1
7	00022560	Nut, Flange Lock, 3/8-16	1
8	00027279	Nut, 7/16-14, Nylock	2
9	00071691	Spacer, Control Rod	1
10	01000371	Hex Cap Screw, 3/8-16 x 3-1/4	1
11	01000635	Nut, Lock, HexFlange, 5/16-18	7
12	01000723	Flat Washer, .406 ID x 1.0 OD x .105	1
13	01000897	Screw, TT, 1/4-20, 1.0, Hex Index Washer	1
14	01001972	Hex Cap Screw, 5/16-18 x 2.75	2
15	01002751	Spacer, .39 ID x .63 OD x 1.75	1
16	01002771	Hair Pin, INT .072 x 1.12 Lg.	2
17	01003595	Weldment, Brake Handle	1
18	01003468	Spacer, .375 x .50 x .75 Lg	1
19	01003716	Grip, Park Brake	1
20	01004971	Lift Handle Spring	4
21	01008042	Spring Retainer	1
22	01008600	Socket Head Capscrew, 5/16-18 x 1.50	1
23	01008607	Spacer, Pump Release	1
24	01008886	Rod Brake, Connect To Handle	1
25	01008889	Park Brake Mounting Bracket	1
26	01009561	Brake Arm Assembly	1
27	01009566	Brake Arm Bracket	2
28	01009569	Pivot Brake Shaft	1
29	01009601	Hose, .5 ID x .78 OD, Low Pressure	2
30	01009602	Spacer, .76 ID x 1.0 OD x 3/4	2
31	02000401	Spring Extension, .740 OD x 2.656	2
32	02001588	Brake Rod, LH	1
33	02001589	Brake Rod, RH	1

Fuel Tank Assembly - Figure 4 and Parts List

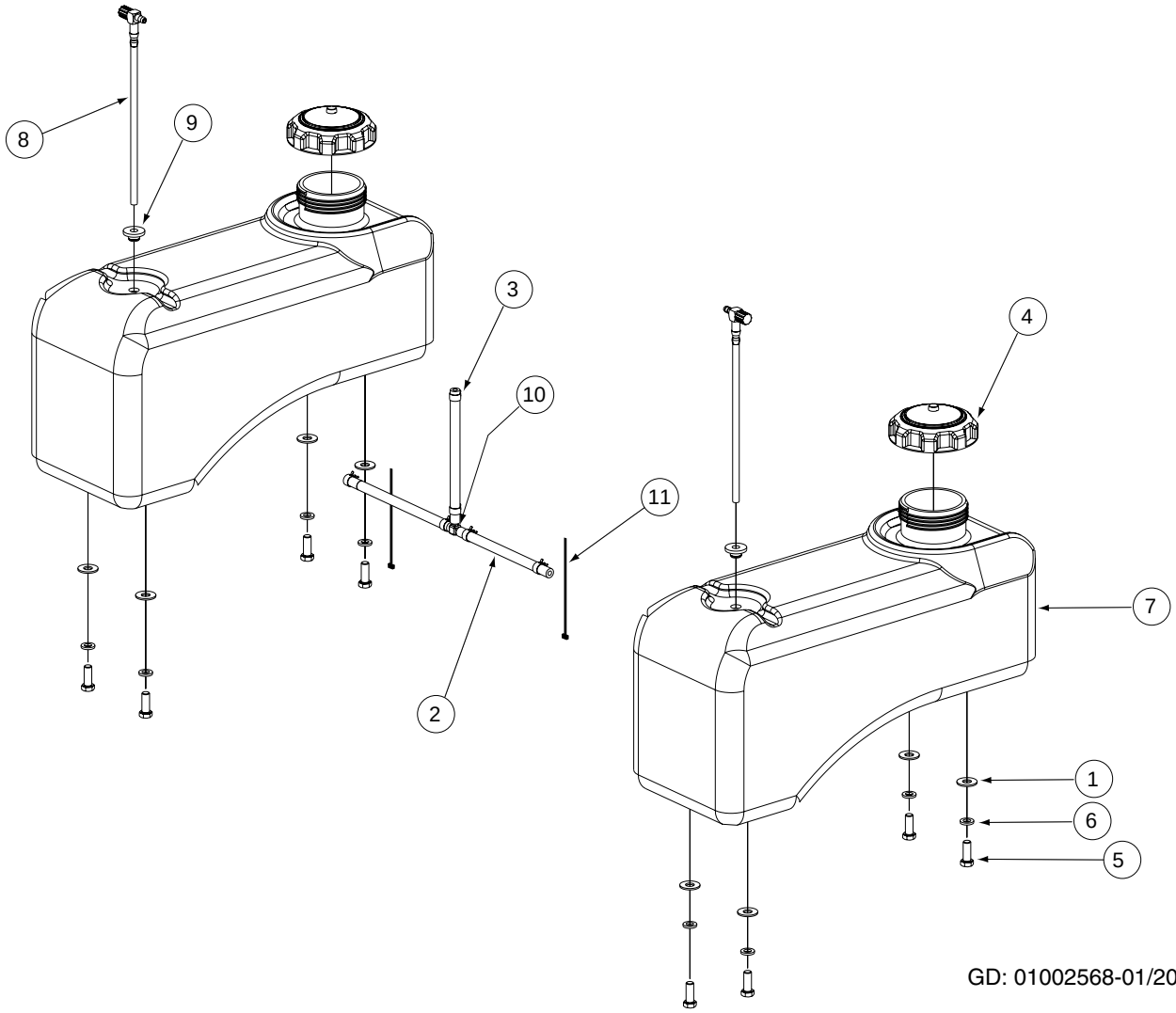

GD: 01002568-01/20/06

Ref. No.	Part No.	Description	Qty.
1	01000723	Flat Washer, .406 ID, 1.0 OD, .105	8
2	--	Hose, 1/4" Fuel Line (in inches)	70.0
3	00012235	Clamp, Union	6
4	01000069	Fuel Cap, 3.5	2
5	01000368	Hex, Cap Screw, 3/8-16, .88	8
6	00012157	Lock Washer, 3/8	8
7	01004350	Fuel Tank	2
8	01003116	Fuel Fitting	2
9	02002253	Grommet, Fuel Tank	2
10	01003473	Tee Fitting, Fuel	1
11	00012470	Cable Tie	2

Rear Bumper - Figure 5 and Parts List

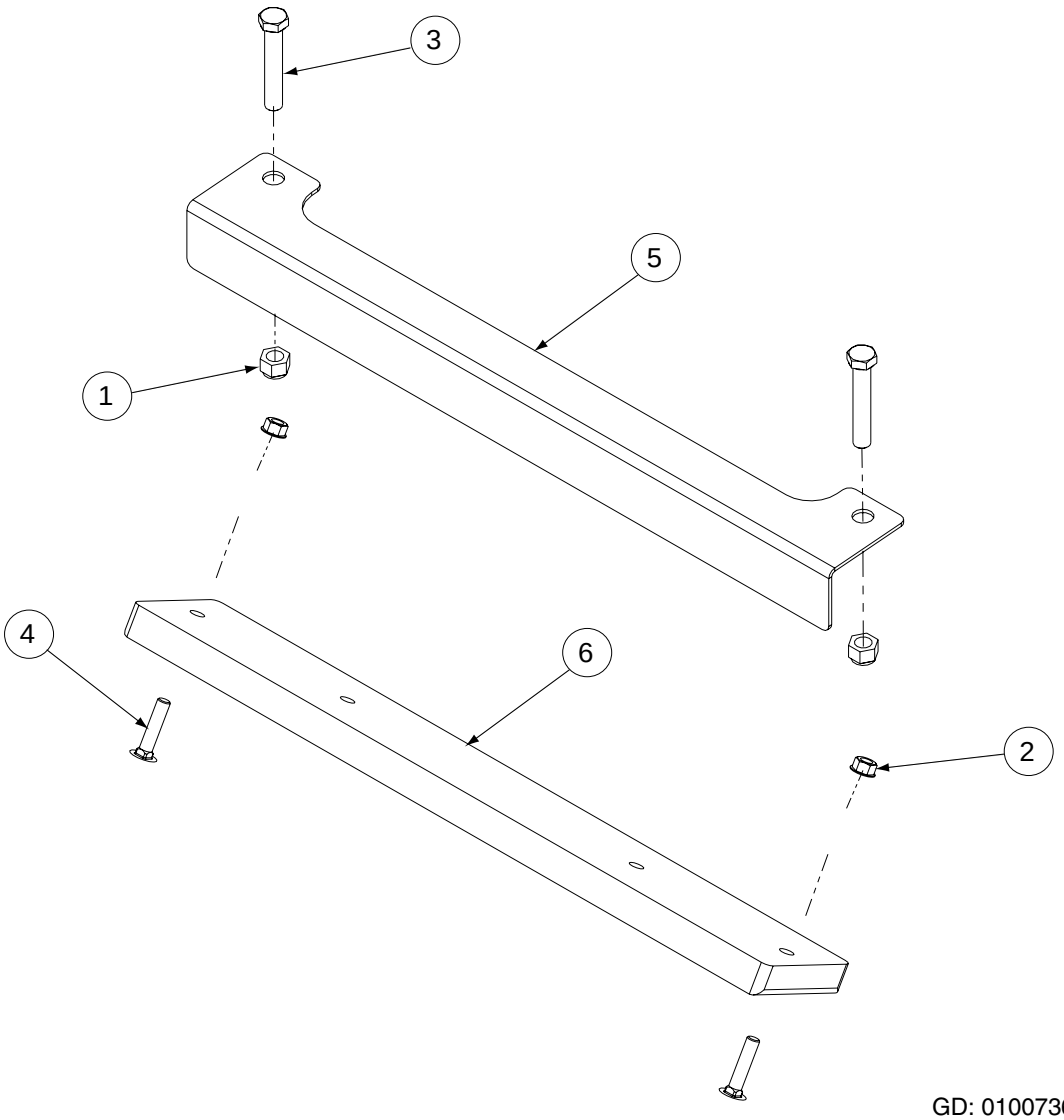

GD: 01007365-04/08/04

Ref. No.	Part No.	Description	Qty.
1	00012428	Hex Nut, 1/2-13, Insert Lock	2
2	00022560	Nut, Hex 3/8-16 Flange Lock	2
3	00030046	HHCS, 1/2-13, 3.00	2
4	01000364	Carriage Bolt, 3/8-16 x 1.75	2
5	01007362	Rear Bumper Bracket	1
6	01009992	Bar Weight	1

Front Caster Assembly - Figure 6 and Parts List

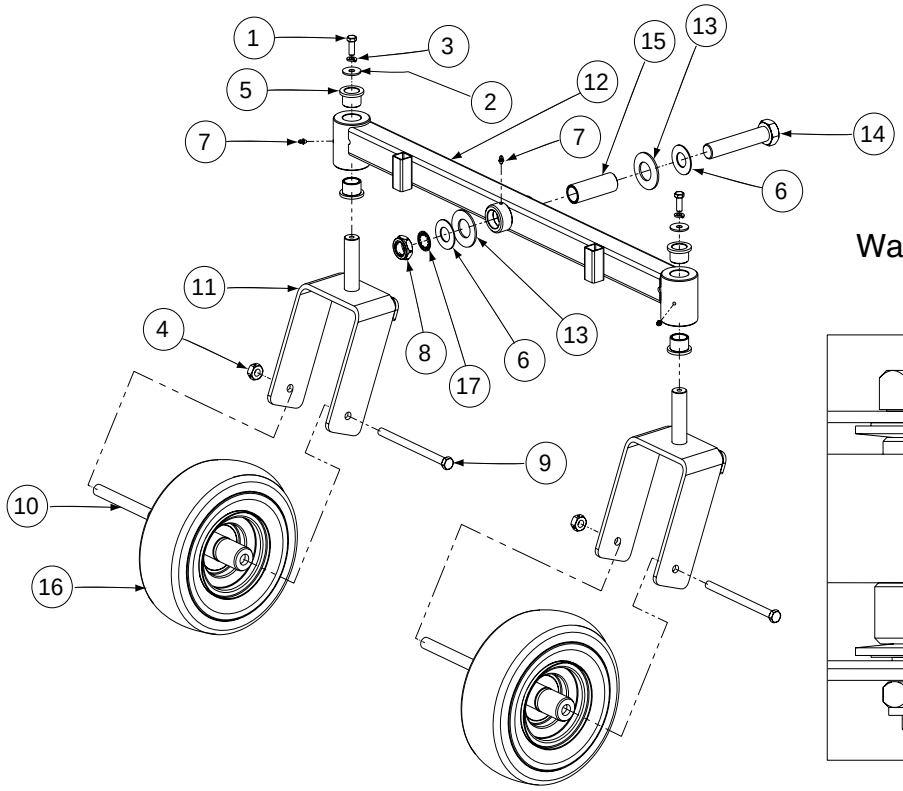

Washer Order and Orientation

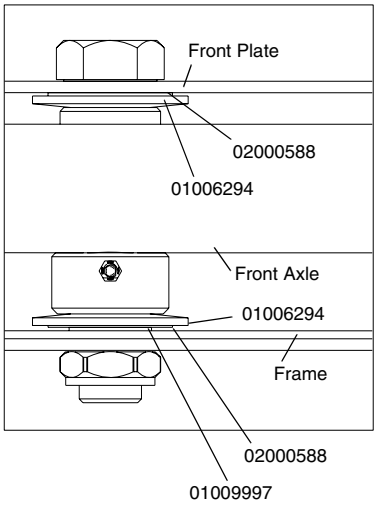

GD: 02000572-12/13/05

Ref. No.	Part No.	Description	Qty.
1	00006144	Hex Cap Screw, 3/8-16, x 1	2
2	01000872	Flat Washer, .411 x 1.25 x 1.00	2
3	00012157	Lock Washer, 3/8	2
4	00023287	Center Lock Nut, 1/2-20	2
5	00023793	Flange Bearing, 1.013	4
6	02000588	Flat Washer, 1.00 ID x 2.00 OD x .075	2
7	00060078	Grease Fitting, 1/4-28 x 3/16	3
8	01000678	Jam Lock Nut, 1.0-14	1
9	02002154	Hex Cap Screw, 1/2-20 x 7.25	2
10	02002153	Spacer, .51 ID x .75 OD x 5.925 Lg	2
11	01007364	Caster Wheel Bracket Assembly	2
12	02000570	Narrow Front Axle Assembly	1
13	01006294	Belle Washer, 1.25 ID x 2.500 OD x .1	2
14	01006309	Hex Cap Screw, 1-14 x 5.0	1
15	02000589	Spacer, 1.005 ID x 1.25 OD x 3.6	1
16	01006559	Wheel Assembly, 11 x 4-5.00 includes:	2
	02002098	Tire	1
	02002099	Roller Bearing	1
	02002100	Roller Bearing	1
	02002101	Retainer Bushing	2
17	01009997	Retainer Extension, Self Locking	1

Wheel Assembly - Figure 7 and Parts List

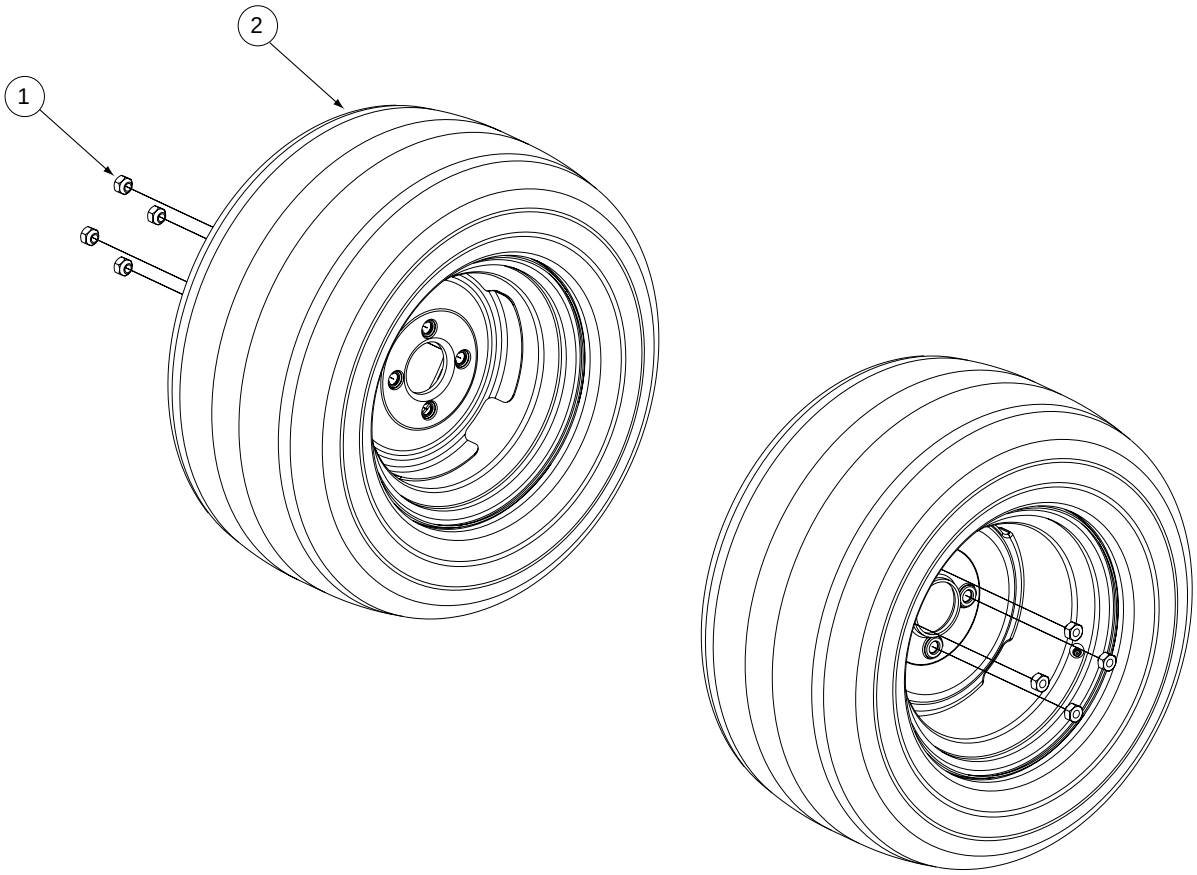

GD: 01006503-05/16/05

Ref. No.	Part No.	Description	Qty.
1	00012187	Lug Nut, 1/2-20	8
2	01006541	Wheel Assembly, 23 x 9.5-12, Turf Pro	2
		Includes:	
	02002102	Tire, 23 x 9.50-12, Turf Pro	
		Rim, 12 Dia x 7.00 width	

Control Assembly- Figure 8

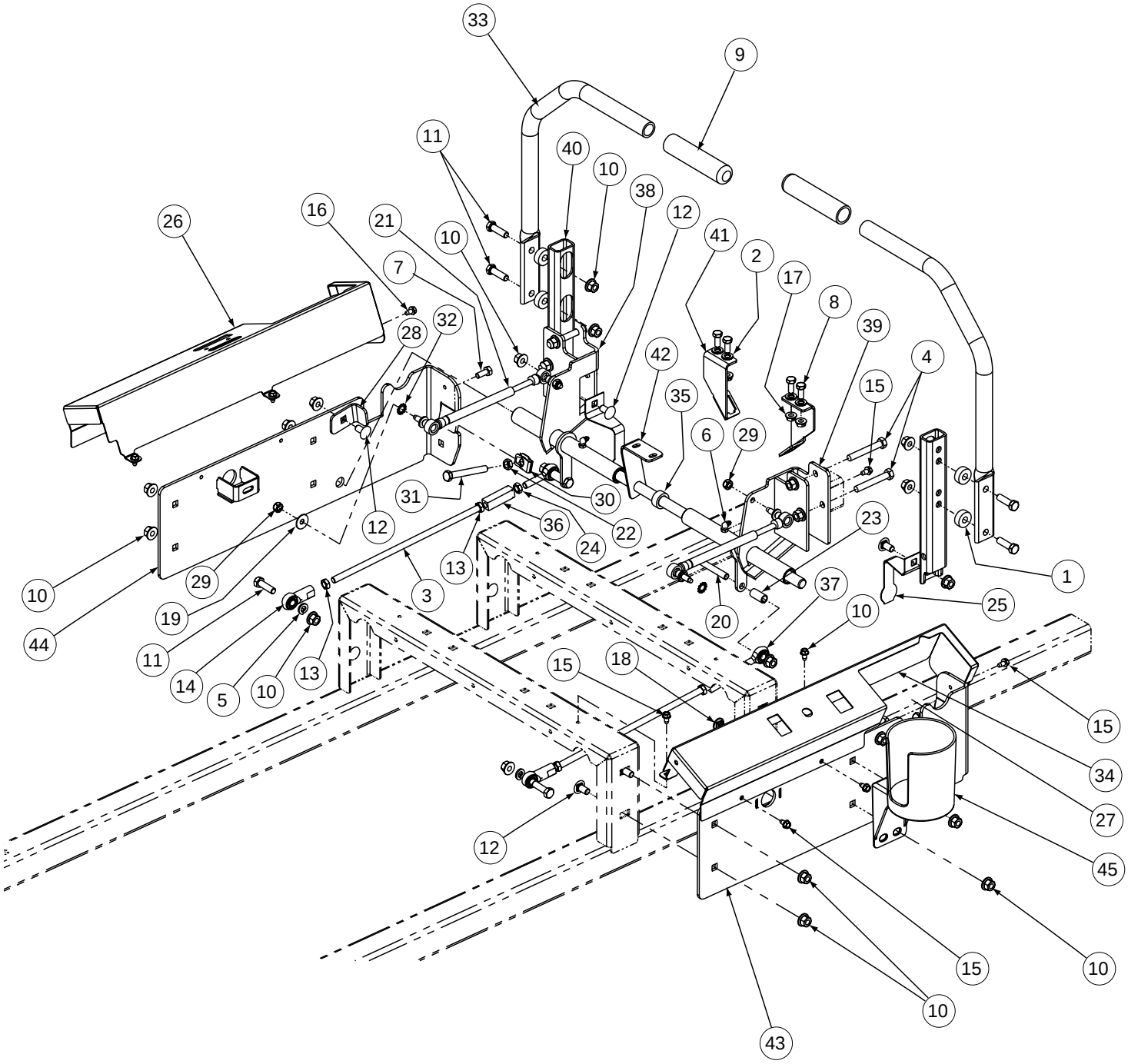

GD: 02001569-04/05/06

Control Assembly - Parts List for Figure 8

Ref. No.	Part No.	Description	Qty.	Ref. No.	Part No.	Description	Qty.
1	750-3119	Spacer, .406 ID x 1.00 OD x .38	4	25	01003011	Lever, Safety Switch	2
2	00009812	Flat Washer, 5/16	4	26	01004889	Control Panel, LH	1
3	02001573	Rod Connector, 3/8-24 x 11.00 Long	2	27	02002015	Stop, RH	1
4	00011861	Hex Cap Screw, 3/8-16, 2.5	4	28	02002017	Stop, LH	1
5	00012157	Lock Washer, 3/8	2	29	01003561	Nut, Hex, Center Lock, M8 x 1.2	4
6	00012226	Grease Fitting, 90°, 1/4-28	2	30	01003947	U-Nut, 3/8-16 x .75	2
7	00013092	HHCS, 5/16-18 x 1.0	1	31	01004127	HHCS, 3/8-16, 3.00	2
8	00013406	Hex, Cap Screw, 5/16-18 x 3/4	4	32	01005851	External Lock Washer	2
9	00022223	Grip, 1	2	33	01007359	Lapbar Handle, One Position	2
10	00022560	Hex Nut, 3/8-16, Lock Flange	25	34	01004890	Control Panel, RH	1
11	01000369	Hex Cap Screw, 3/8-16, 1.25	6	35	01006350	Shaft Collar, .625 ID, 1.00 OD, .438 Lg	2
12	01000372	Carriage Bolt, 3/8-16 x .75	11	36	01007734	Turnbuckle	2
13	01000450	Hex Jam Nut, 3/8-24	4	37	01008367	B/Joint, 3/8-24, Left Hand Female	2
14	01000451	B/Joint, 3/8-24, Right Hand Female	2	38	01009552	Hub Assy, Control LH Bearing	1
15	01000628	Screw, TT, 1/4-20, 0.5, Hex Index Washer	11		01004265	Bearings	2
16	01000629	Screw, TT, 1/4-20, 0.75, Hex Index Washer	1	39	01009553	Hub Assy, Control RH Bearing	1
17	01000635	Nut, Lock, HexFlange, 5/16-18	5		01004265	Bearings	2
18	01000643	Carriage Bolt, 3/8-16 x 1	2	40	01010176	Mounting Handle	2
19	01000960	Belle Washer, .325 x .930 x .045	2	41	02000164	Switch Mounting Bracket, Lapbar	2
20	01001366	Hex Cap Screw, 3/8-16 x 2.25	2	42	02000175	Shaft Control Brake Steering	1
21	02002501	Cylinder Return to Neutral	2	43	02000178	Side Panel, Control, Right	1
22	01002511	Nut, 3/8-16, Jam	2	44	02000179	Side Panel, Control, Left	1
23	01002772	Spacer, .375 x .50 x 1.02	2	45	02001311	Cup Holder Assembly	1
24	01002986	Nut, 3/8-24, Jam, LH Third	2				

Drive Assembly- Figure 9 and Parts List

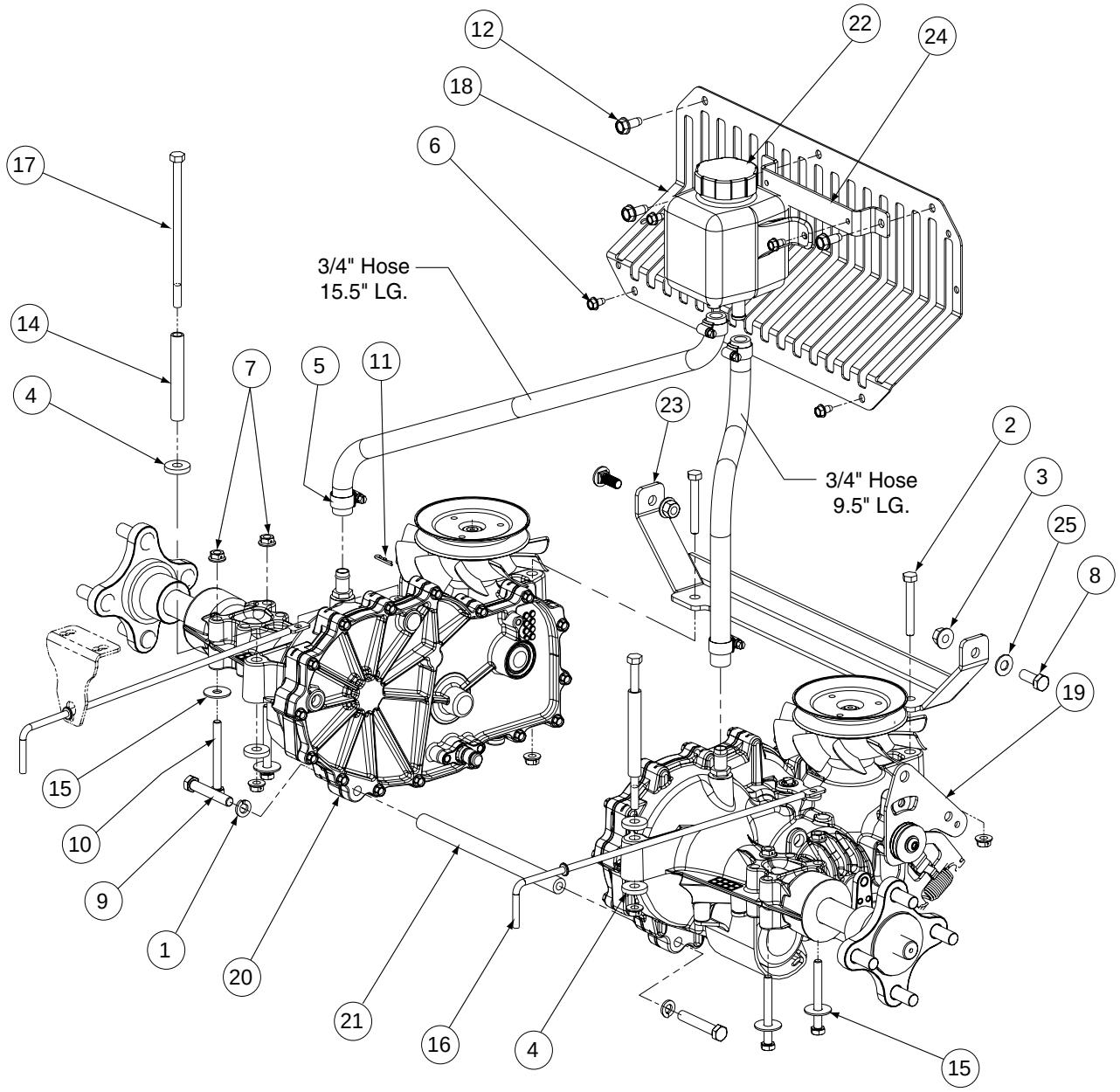

GD: 02002155-01/04/06

Ref. No.	Part No.	Description	Qty.	Ref. No.	Part No.	Description	Qty.
1	00012157	Lock Washer, 3/8	2	15	01009937	Washer, 5/16 x 1.06	4
2	00012747	Hex Cap Screw, 5/16-18 x 2.25	2	16	02001332	Pump Rod	2
3	00022560	Flange Lock Hex Nut, 3/8-16	2	17	02001556	Hex Cap Screw, 5/16-18 x 6.00	2
4	00083192	idler Washer	4	18	02001559	Pump Screen	1
5	01000216	Hose Clamp	4	19	02002156	Trnsmission Assembly, RH	1
6	01000628	Screw, TT, 1/4-20 x .5, Hex Index Washer	4		02002150	Filter	1
7	01000635	Hex Flange Lock Nut, 5/16-18	8	20	02002157	Transmission Assembly, LH	1
8	00006144	Hex Cap Screw, 3/8-16 x 1.00	2		02002150	Filter	1
9	01001366	Hex Cap Screw, 3/8-16 x 2.25	2	21	02001572	Transmission Support Tube	1
10	01001972	Hex Cap Screw, 5/16-18 x 2.75	4	22	02001578	Hydraulic Tank	1
11	01002771	Cotter Pin, .072 x 1.12 Long	2	23	02001584	Transmission Brace Weldment	1
12	01008620	Self Tapping Screw 5/16-18 x .750	3	24	02001554	Hydraulic Tank Bracket	1
13	--	Fuel Hose, .50 ID x .75 OD (in inches)	23	25	00012158	Flat Washer, 3/8	2
14	01009872	Spacer, .370 ID x .500 OD x 3.45	2				

Seat Assembly- Figure 10 and Parts List

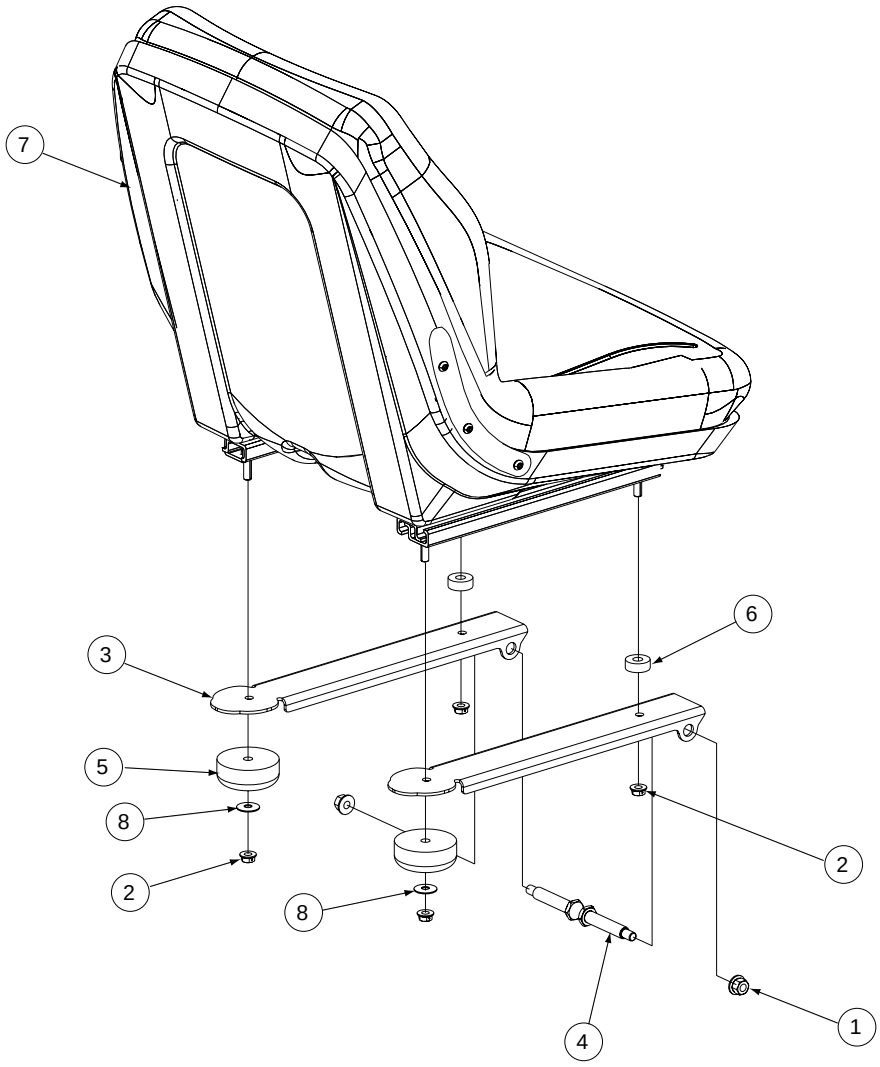

GD: 01007314-10/11/05

Ref. No.	Part No.	Description	Qty.
1	00022560	Nut, Hex 3/8-16 Flange Lock	2
2	01000635	Lock Nut, Hex Flange, 5/16-18	4
3	01001630	Mounting Bracket, Seat	2
4	01002634	Shoulder Screw, .50x2.345, 3/8-16	2
5	01002753	Grommet, 2.5 OD x 1.0 Long	2
6	750-3119	Spacer, .406 ID x 1.00 OD x .38	2
7	02001944	Adjustable Seat, Black	1
	02002255	Armrest Kit	
8	01000960	Flat Washer, .406 ID, 1.00 OD, .105	2

23HP Kohler Engine Assembly - Figure 11

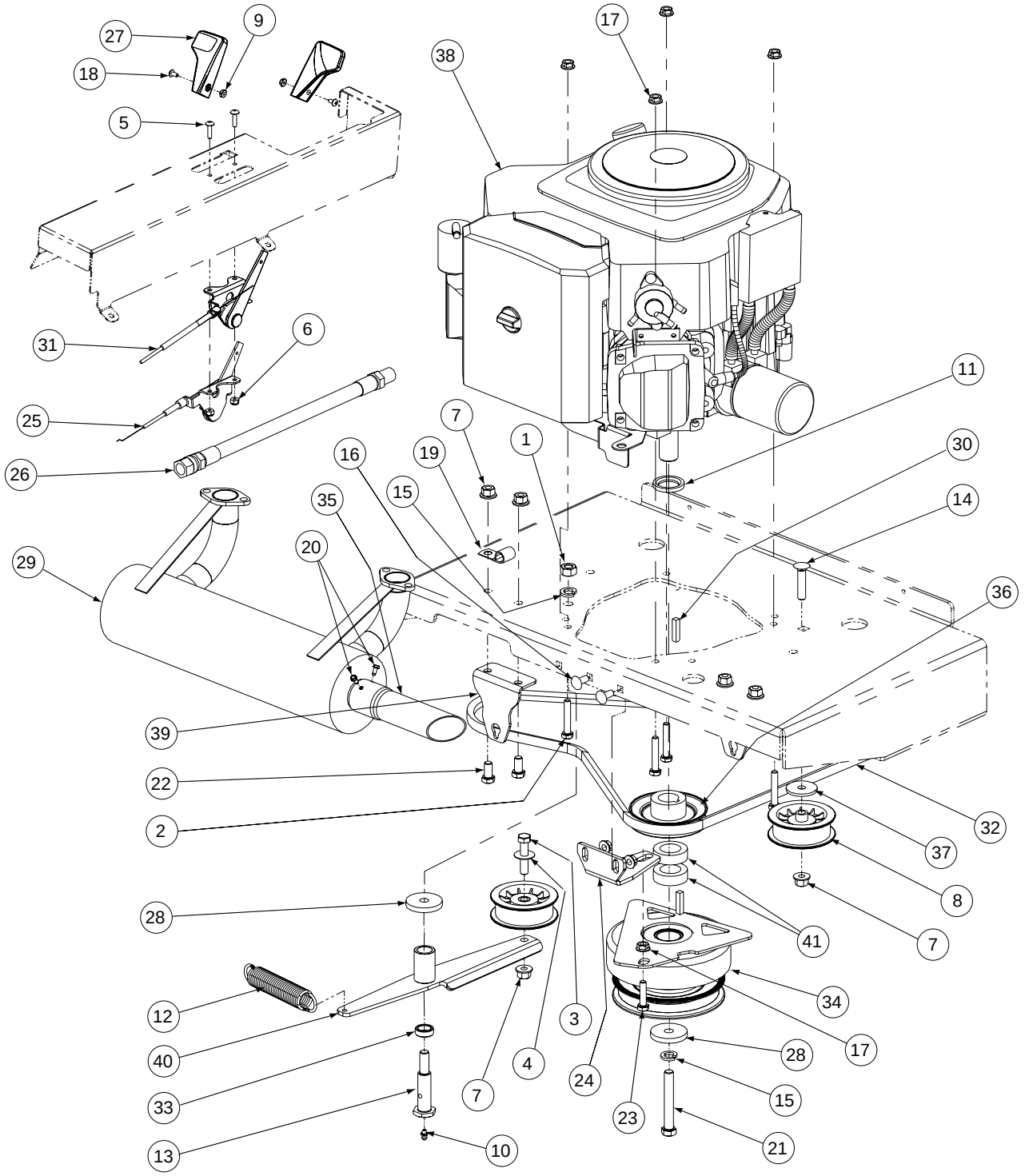

Description	Part Number
Air Filter	KH-24-083-03-S
Pre Filter	KH-24-083-05-S
Fuel Filter	KH-24-050-10-S
Oil Filter	KH-12-050-08
Spark Plug	759-3336
Gasket Exhaust (2)	--

GD: 02001555-02/08/06

23HP Kohler Engine Assembly - Parts List for Figure 11

Ref No	Part No.	Description	Qty.
1	00005763	Hex Nut, 7/16-14	1
2	00006129	HHCS, 5/16-18, 1-3/4	4
3	00008495	Capscrew, 3/8-16 x 1-3/4	1
4	00012158	Washer	1
5	00014602	Round Hd. Machine Screw, 10-32 x 3/4	2
6	00014608	Lock Nut, Nylon Insert, 10-32	2
7	00022560	Flange Lock, Hex Nut, 3/8-16	6
8	00030782	Idler Pulley w/ Adaptor	2
9	00060056	Nut Washer, W/Star, 8-32	2
10	00060078	Grease Fitting, 1/4-28 x 3/16	1
11	00073094	Engine Spacer	1
12	01000199	Extension Spring, 1.0 OD x 5.00	1
13	01000302	Shoulder Screw, 7/16-14	1
14	01000364	Hex Carriage Screw, 3/8-16, 1.75	1
15	01000389	Lock Washer, 7/16	2
16	00020508	Carriage Bolt:5/16-18 x 3/4	2
17	01000635	Hexflange Lock Nut, 5/16-18	7
18	01000721	Machine Screw, 8-32, .375	2
19	01000728	Clip, Heat Shield Cable	1
20	01000811	Tube Clamp, 1.375	2
21	01000813	Capscrew, 7/16-20 x 3.00	1
22	01002601	Hex Cap Screw, 3/8-16, .750	4
23	00013116	Hex Cap Screw:5/16-18 x 1-1/4	1
24	02001994	Retainer Clutch Assembly, Ogura	1
25	01003273	Throttle, Control Cable, 45.0	1
26	01003283	Oil Drain Hose	1
27	01004004	Control Throttle Knob	2
28	01005314	Flat Washer, 7/16 IDx 1.750 OD x .250T	2
29	01006566	23HP Kohler Exhaust	1
30	00025344	Key, 1/4 x 1/4 x .875	2
31	01008256	Choke, Control Cable, 38.0	1
32	01008349	V-Belt, 56.00	1
33	01008404	Spacer, .635 ID x .28	1
34	01008434	Electric Clutch	1
35	01008623	Muffler Accessory Exhaust Tube	1
36	01007339	Transmission Drive Pulley	1
37	01009253	Washer, 5/16-18	1
38	KH-PA-75592	23HP Kohler Engine	1
39	02001545	Neutral Lock Mounting Bracket	2
40	02001596	Engine Idler Arm Assembly Includes:	1
	01000308	Bearing	2
41	00023821	Spacer, 1.015 ID x 1.62 OD x .50	2

Note: Use 10W40 Engine Oil

18HP Electrical Engine Assembly - Figure 12 and Parts List

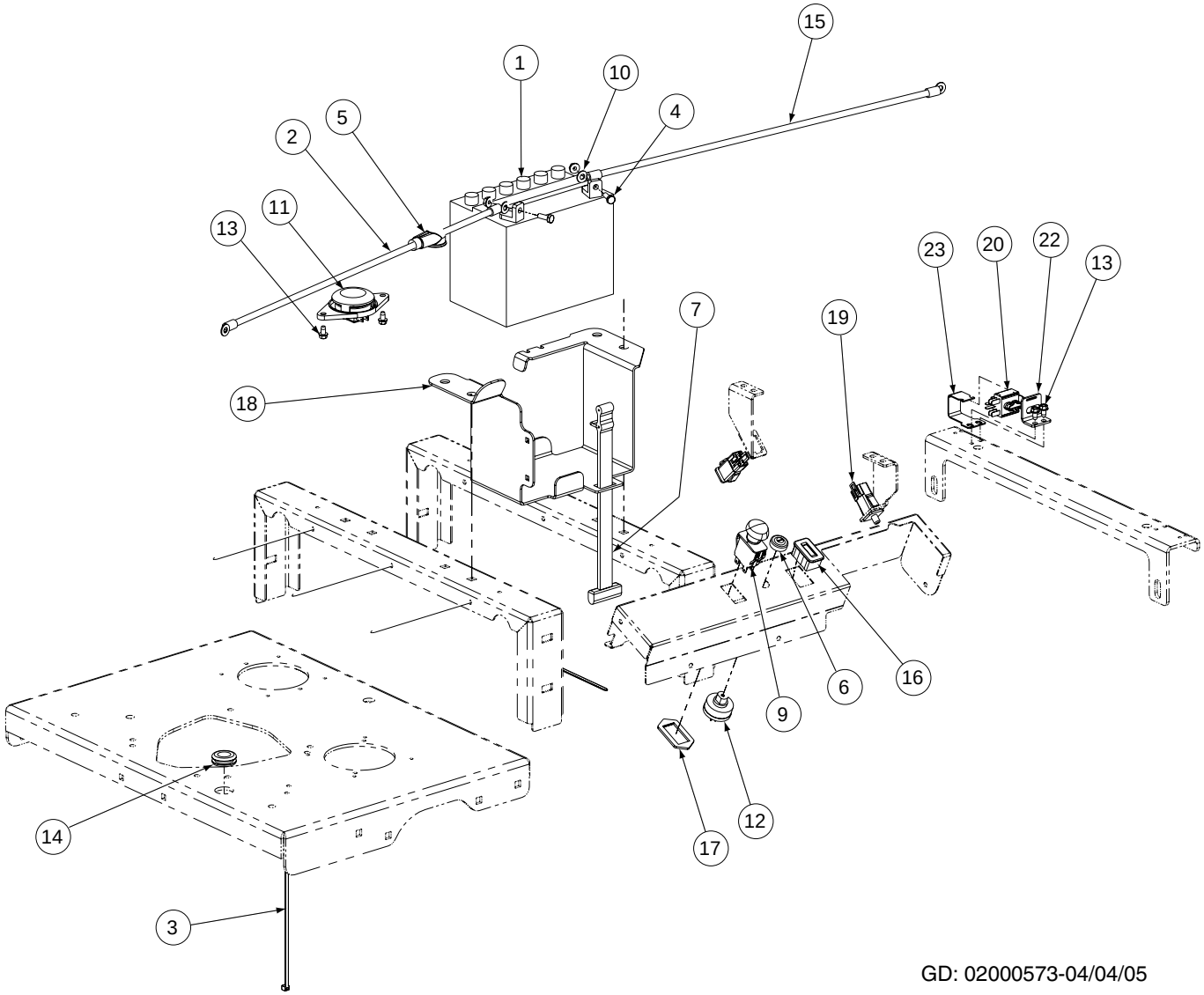

GD: 02000573-04/04/05

Ref. No.	Part No.	Description	Qty.	Ref. No.	Part No.	Description	Qty.
1	00012032	Battery	1	13	01000628	Screw, TT, 1/4-20 x .5, Hex Index Washer	4
2	00012289	Cable, Battery, Red, 36"	1	14	01004040	Grommet, .75 ID	1
3	00012470	Tie, Cable, 3/16 x .05 x 7.4"	5	15	01004078	Cable, Battery Black, 28"	1
4	00013131	Screw, Hex, Cap, 1/4-20 x .75	2	16	01005389	Meter, Hour	1
5	00013258	Boot, 1" OD Rubber Battery-PST, Red	1	17	01009905	Bracket, PTO Switch Retainer	1
6	00032097	Nut, W/Cap, 5/8-32 Ignition	1	18	02000909	Mount Bracket, Battery	1
7	723-3064	Strap, Battery	1	19	02000024	Switch, Safety	2
8	01001811	Hourmeter, Harness (not shown)	1	20	02000165	Switch, Plunger	1
9	01002111	Switch, Electric, PTO	1	21	02000167	Harness Assembly, kohler (not shown)	1
10	01002766	Nut, 1/4-20, Hex Flange Lock Nut	2	22	02000349	Switch Bracket Mount	1
11	01003277	Switch, Seat N/C	1	23	02000348	Switch Clamp	1
12	01003581	Switch, Ignition, 6 Pin	1				

Floor Panel Assembly- Figure 13 and Parts List

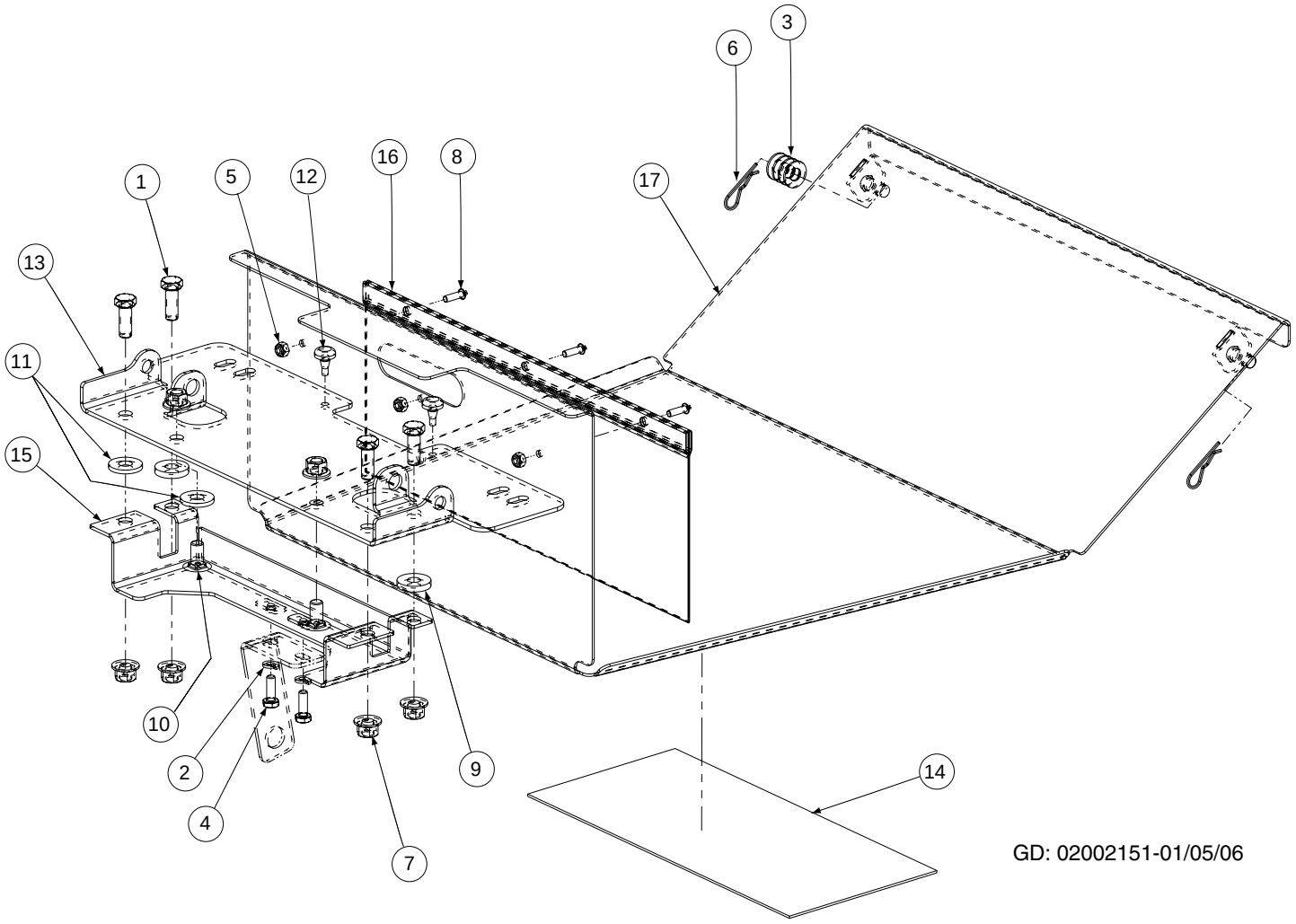

GD: 02002151-01/05/06

Ref. No.	Part No.	Description	Qty.
1	00006144	Hex Cap Screw, 3/8-16, x 1	4
2	00012132	Lock Washer, 1/4	2
3	00012158	Washer	AR
4	00013131	Hex Cap Screw, 1/4-20, .75	2
5	00014608	Lock Nut, Nylon Insert, 10-32	3
6	00021956	Hair Pin, 3/8-1/2	2
7	00022560	Hex Nut, Flange Lock, 3/8-16	6
8	00030906	Screw, Phillips Head, Machine, 10-32 x 5/8	3
9	00083192	Washer	2
10	01000372	Carriage Bolt, 3/8-16 x .75 Long	2
11	01000723	Flat Washer, .406 ID x 1.0 OD x .105	2
12	01001170	Rubber Bumper, .62 OD x .22 Thick	2
13	01001638	Panel Seat	1
14	01004992	Label, Belt Routing and Lubrication	1
15	02000361	Support, Seat Bracket	1
16	02000362	Bag, Debris Storage	1
17	02000433	Floor Panel Assembly	1

Lift Assembly - Figure 14

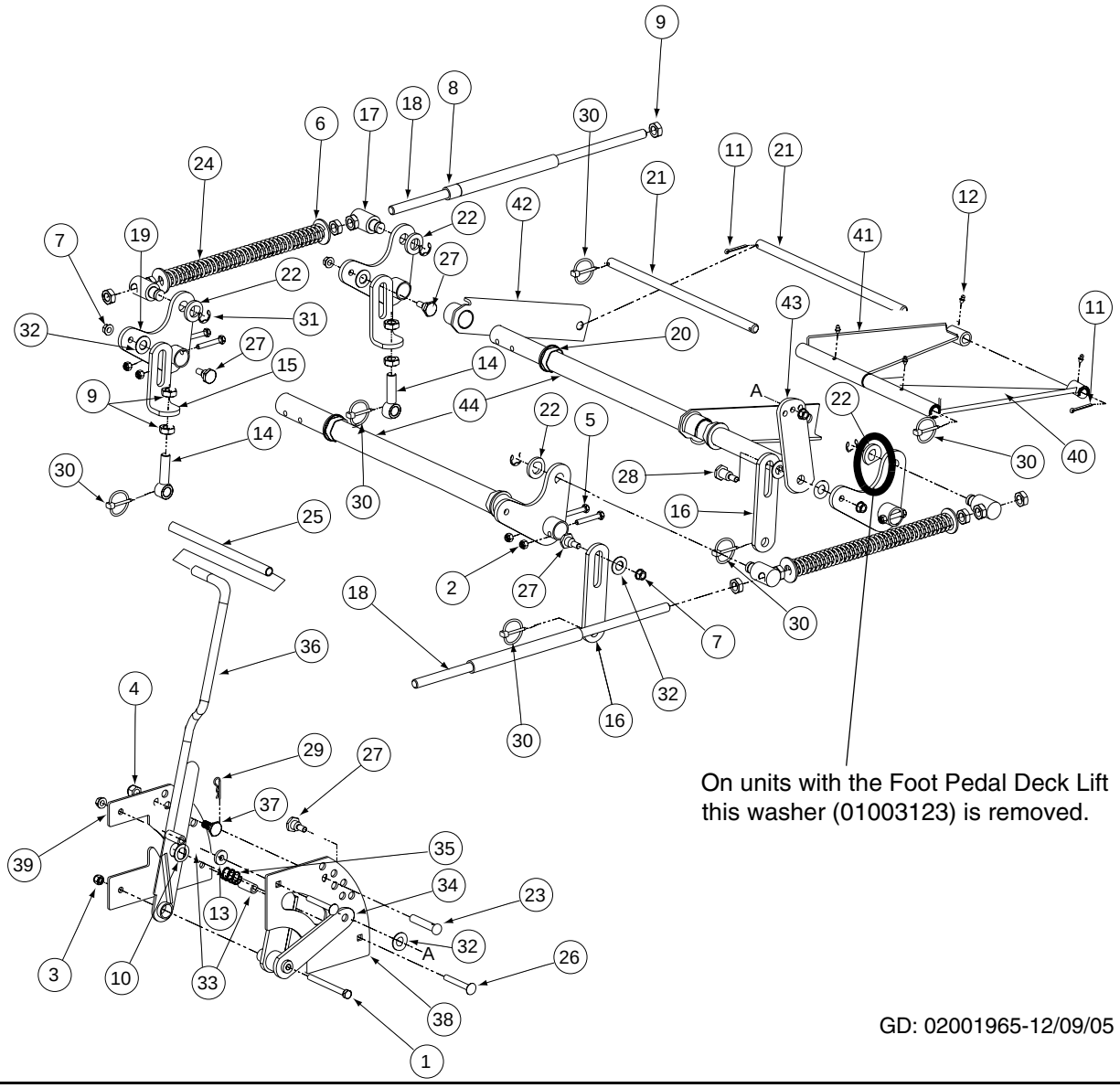

GD: 02001965-12/09/05

OPTIONAL FOOT PEDAL DECK LIFT

Ref. No.	Part No.	Description	Qty.
1	00012152	Lock Nut, Nylon Insert, 1/4-20	4
2	00012577	Washer, 1/2 x 1 Shim	1
3	01006786	Detent Pin w/Lanyard, 1/4"	1
4	00013131	Hex Cap Screw, 1/4-20, .75	2
5	00022560	Hex Nut, Flange Lock 3/8-16	1
6	01000944	Hex Cap Screw, 1/4-20, 1.00	2
7	01004118	Shoulder Screw, .50x.27 Lg., 3/8-16	1
8	01006409	Foot Lift Backup Pedal	1
9	01006352	Deck Foot Pedal Lift	1
10	01008359	Deck Foot Pedal Lift Holder	1
11	01006418	Deck Foot Lift Pad	1
12	00062715	Turnbuckle Sleeve	2

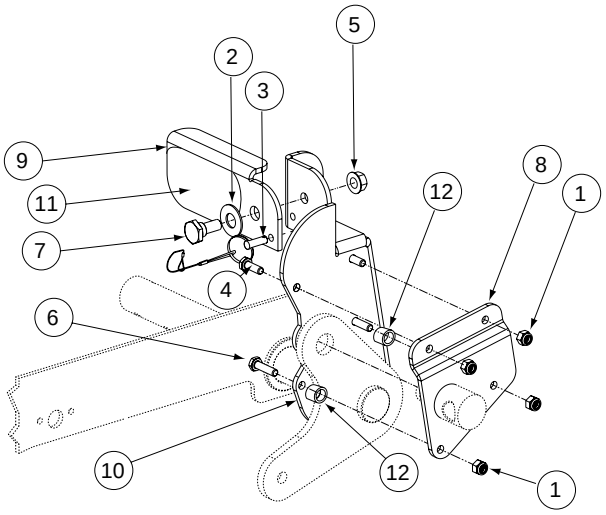

Lift Assembly - Parts List for Figure 14

Ref. No.	Part No.	Description	Qty.
1	00011925	Hex Cap Screw, 3/8-16, 3.75	1
2	00012165	Nut, 5/16-18, Nylock	8
3	00012173	Nylock Insert Lock Nut, 3/8-16	1
4	00012428	Nylock Insert Lock Nut, 1/2-13	1
5	01007962	Socket Head Capscrew, 5/16-18 x 2	8
6	00013432	Flat Washer, 5/8	4
7	00022560	Hex Nut, Flange Lock, 3/8-16	7
8	01006823	PVC Hose, 5/8 ID x 13/16 OD x 8"	2
9	00035632	Jam Nut, 5/8-11	14
10	00060017	Flat Washer, .06, .776, 1.25	1
11	00060018	Cotter Pin, 3/16 x 1-1	2
12	00060078	Grease Fitting, 1/4-28 x 3/16	4
13	00083192	Idler Washer	1
14	01001744	Eye Bolt, 5/8ID	2
15	01004917	Eye Bolt Mount Link, 5/8 ID	2
16	02000562	Deck Link	2
17	01001855	Ferule Lift	4
18	01001857	Lift Connector Rod	2
19	01008207	Bellecrank Weldment Lift	4
20	01001930	Hex Flange Bearing, 1.25 ID	4
21	01002586	Front Lift Link, Rod Mount	2
22	01003123	Spacer, .812 ID x .218 Lg.	4
23	01003284	Clevis Pin, .500 Dia. x 2.625 Lg.	1
24	01003318	Lift Compression Spring	2
25	01007561	Lift Handle Grip	1
26	01003534	Carriage Bolt, 3/8-16, 2.75	2
27	01003535	Shoulder Screw, 0.625 OD x .437 Lg.	4
28	01003536	Shoulder Screw, 0.625 OD x .830 Lg.	1
29	01003537	Cotter Pin, .148 x 3.00	1
30	01003993	Linch Pin, 3/16	6
31	01003994	E Clip, 3/4 Dia.	4
32	01004003	Nylon Flat Washer, 5/8	6
33	01004080	Spacer, .39 ID x .63 OD x 1.442	2
34	01004924	Lift Pivot Assembly	1
35	01004971	Lift Handle Spring	1
36	01007469	Lift Handle Assembly	1
37	01004984	Shoulder Screw, 5/8 OD x 0.264	1
38	01007368	Outer Lift Index Plate	1
39	01007371	Inner Lift Index Plate	1
40	01001738	Bearing Lift Brace Assembly, Right Hand	1
41	01003991	Bearing Lift Brace Assembly, Left Hand	1
42	01005569	Front Frame Strut Assembly	2
43	01006365	Lift Link Adjustment	1
44	01007681	Lift Shaft Holder	2

Notes

Notes



Cub Cadet Commercial
P.O. Box 368023
Cleveland, OH 44136

Form No. 02001548 Rev. 06-5 04/21/2006