Illustrated Parts Manual

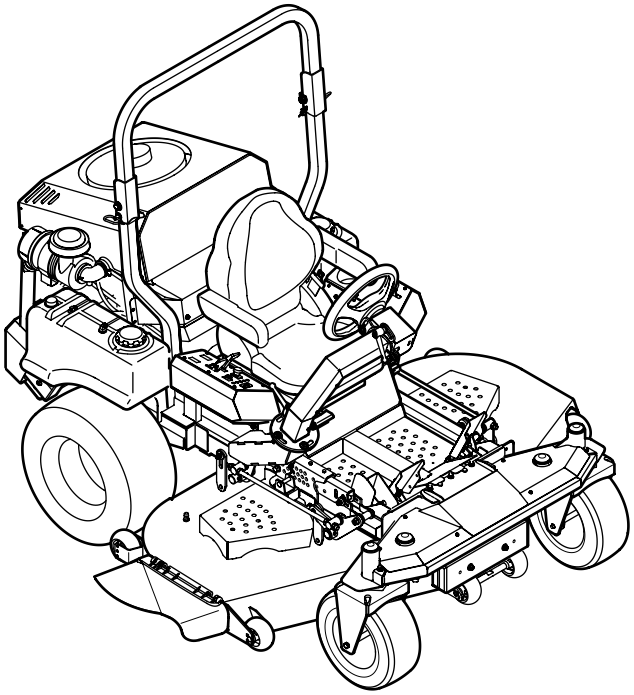

TANK S
Diesel

CUB CADET LLC, P.O. BOX 361131 CLEVELAND, OHIO 44136-0019

Printed In USA

Form No. 769-05978
March 11, 2010

To The Owner

Thank You

Thank you for purchasing a Cub Cadet Zero-Turn Tractor. It was carefully engineered to provide excellent performance when properly operated and maintained.

All information in this manual is relative to the most recent product information available at the time of printing. Please be aware that this Illustrated Part's Manual may cover a range of product specifications for various models.

Components listed and/or illustrated in this manual may not be applicable to all models. We reserve the right to change product specifications, designs and equipment without notice and without incurring obligation.

Throughout this manual, all references to *right* (RH) and *left* (LH) are observed from the operating position.

Table of Contents

Battery.....12
Bumper.....21
Control Panels.....10
Deck Assembly, 60".....28
Deck Assembly, 72".....30
Deck Lift Assembly.....20
Deck Spindle Assembly, 60".....32
Deck Spindle Assembly, 72".....34
Electrical.....12
Electrical Schematic.....58
Engine, Yanmar 3TNV82A-BDCB.....36
Engine Accessories.....24
Frame.....3
Front Axle.....16
Fuel Tank.....5
Hood.....13
Hydro Controls.....6
Hydro Hoses & Pumps.....8
Labels.....59
Lift Lever.....10
Meter, Hour.....12
Muffler.....25
Pedal Controls, Drive.....19
Pedal Controls, Brake.....22
PTO Knob.....12
Radiator.....26
ROPS.....4
Seat.....4
Steering Controls.....14
Steering Wheel/Steering Column.....18
Throttle Control.....24
Wheels, Front & Rear.....23

Record Product Information

To ease in ordering replacement parts, please locate the model plate on the equipment and record the information in the provided area to the right. You can locate the model plate by looking beneath the seat.

Model Number

Serial Number

Painted Parts

When ordering painted service parts, a four digit color suffix must be added to the part number (e.g. 783-XXXXX-0637). Please refer to the table below for current color codes:

0637	Black
4021	Yellow (Cub Cadet)
0499	Beige (Cub Cadet)
0685	Blue (Cub Cadet)
0691	Black Jack (Cub Cadet Commercial)

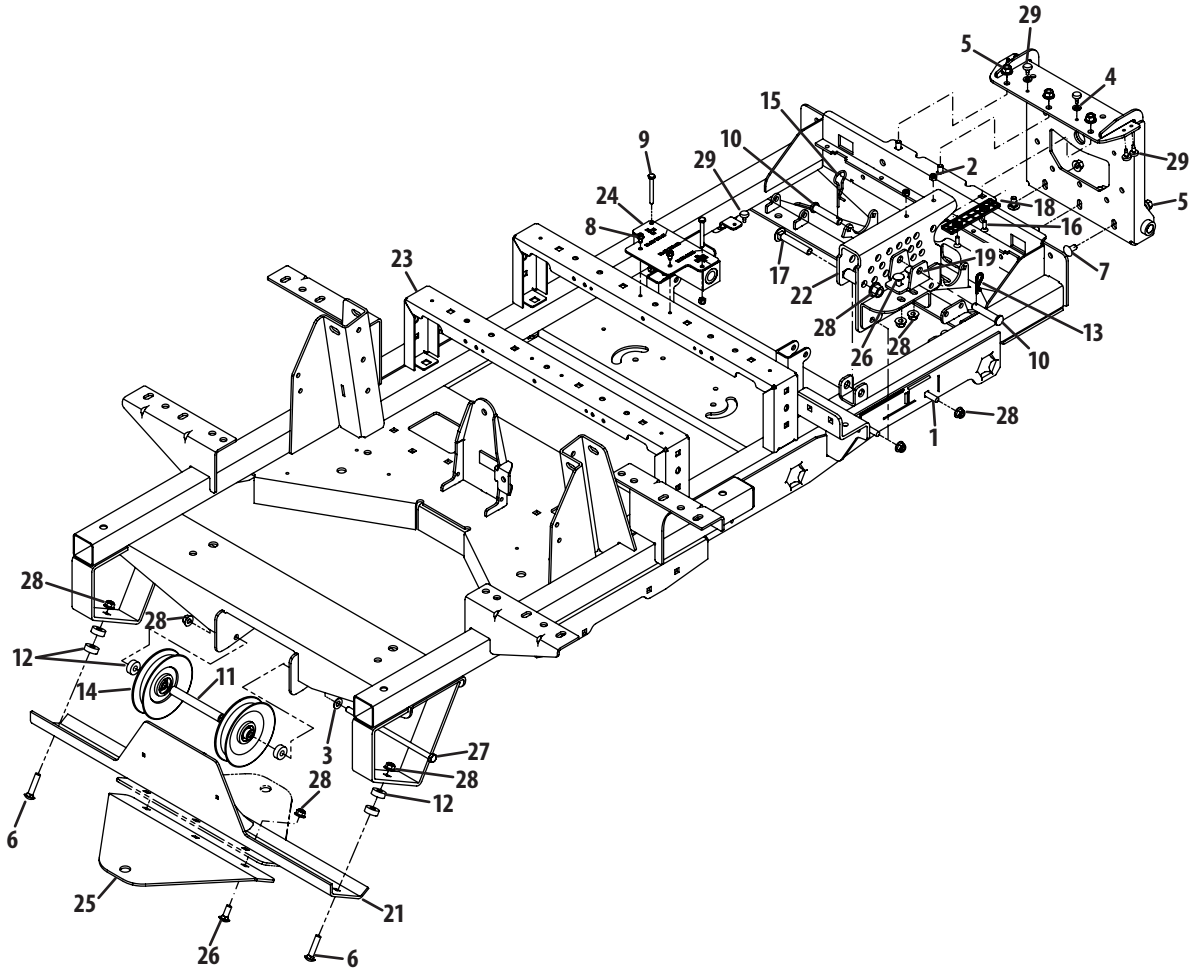

Ref	Part Number	Description
1	00005765	Carriage Bolt, ⅜-16 x 1.25
2	00012152	Nut, ¼-20
3	00012158	Washer, .406 x .813 x .063
4	00012169	Washer, .344 x .688 x .063
5	00022560	Flange Counter Lock Nut, ⅜-16
6	710-0560	Carriage Bolt, ⅜-18 x 1.75
7	710-3178	Carriage Bolt, ⅜-16 x .75
8	710-0599	Hex Flange Screw, ¼-20 x .500
9	710-0641	Hex Screw, ¼-20 x 2.25
10	711-0761	Clevis Pin, ½ x 2.500
11	01009604	Spacer, .385 x .625 x 4.89
12	750-3119	Spacer, .406 x 1.00 x .38
13	02000673	Hair Pin, ½ x 1.625 x .125
14	956-3045	Idler Pulley
15	02003074	Hitch Pin, .120 x 3.00

Ref	Part Number	Description
16	02003505	Flat Head Screw, ¼-20 x .750
17	02003563	Carriage Bolt, ½-13 x 3.00
18	02003749	Wear Plate, 1.125 x 5.0
19	02005357	Cylinder Mount Bracket
20	603-04668	Front Axle Bracket Assembly
21	680-00065	Inner Guards Bracket Assembly
22	680-00094	Lift Index Housing Assembly
23	680-00124	Main Frame
24	703-07098	Manifold Mount Bracket
25	703-07204	Hitch Bracket
26	710-3168	Carriage Bolt, ⅜-16 x 1.00
27	710-3248	Hex Screw, ⅜-16 x 8.50
28	712-04065	Flange Lock Nut, ⅜-16
29	935-0199A	Rubber Bumper, .62 x .22

Seat Assembly

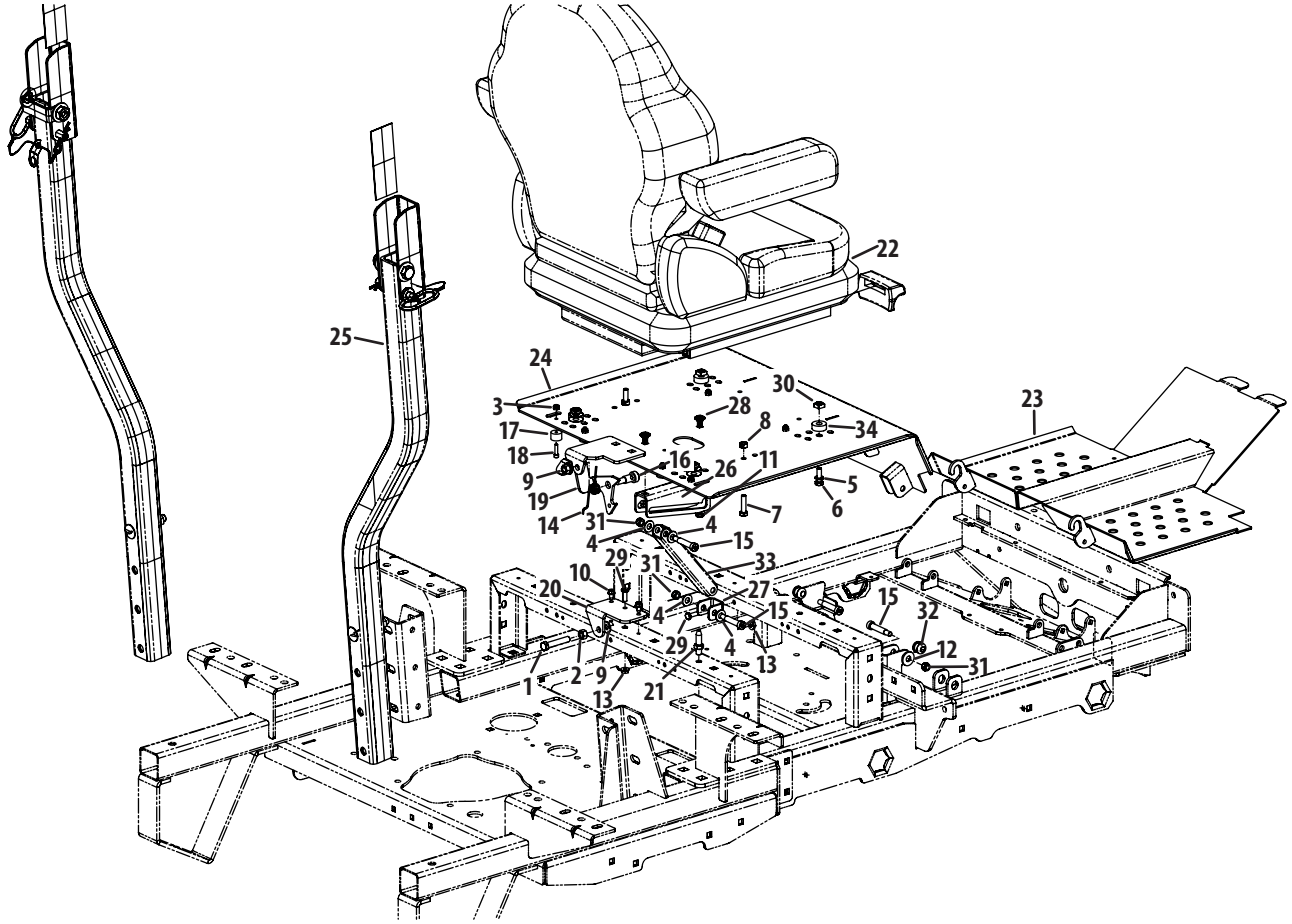

Ref.	Part Number	Description
1	00002528	Hex Screw, ⅜-16 x 2.00
2	912-3017	Nut, ⅜-16
3	712-0161	Nylock Nut, #10-24
4	00012158	Wsdher, .406 x .813 x .063
5	00012168	Lock Washer, .312 x .583 x .083
6	00012180	Hex Screw, 5⁄16-18 x 1.00
7	00013116	Hex Screw, 5⁄16-18 x 1.25
8	00022547	Counter Lock Nut, 5⁄16-18
9	00022560	Flange Counter Lock Nut, ⅜-16
10	710-0599	Hex Screw, ¼-20 x .500
11	712-3004A	Flange Counter Lock Nut, 5⁄16-18
12	736-3052	Washer, .406 x 1.00 x .105
13	912-3027	Flange Top Lock Nut, 1/4-20
14	01008140P	LH Torsion Spring, .725 x 1.07 x .09
15	01009459	Shoulder Bolt, 5⁄16-18 x .37 x 1.50
16	02002091	Shoulder Bolt, ⅜-16 x .50 x .75
17	02002963	Bump Stop w/ Washer

Ref.	Part Number	Description
18	02002964	Flat Head Screw, #10-24 x .750
19	02003732	Lever Latch Bracket
20	02003738	Mount Latch Bracket
21	02003745	Center Adjust Stud, .375 x 1.125
22	02004228	Suspension Seat w/ Seat Belt
23	680-00087	Wide Assembly Floor Panel
24	680-00096	Seat Mount Bracket Assembly
25	680-00110	Folding ROPS Assembly
26	703-07490	Seat Support Lock Bracket
27	703-07491	Seat Link Pivot Mount Bracket
28	710-0260A	Carriage Bolt, 5⁄16-18 x .62
29	710-3015	Hex Screw, ¼-20 x .75
30	712-04190	Nut
31	912-0429	Hex Lock Nut, 5⁄16-18
32	735-04159	Grommet, .38 x .75 x .75
33	749-04613	Link Tube
34	750-3119	Spacer, .406 x 1.00 x .38

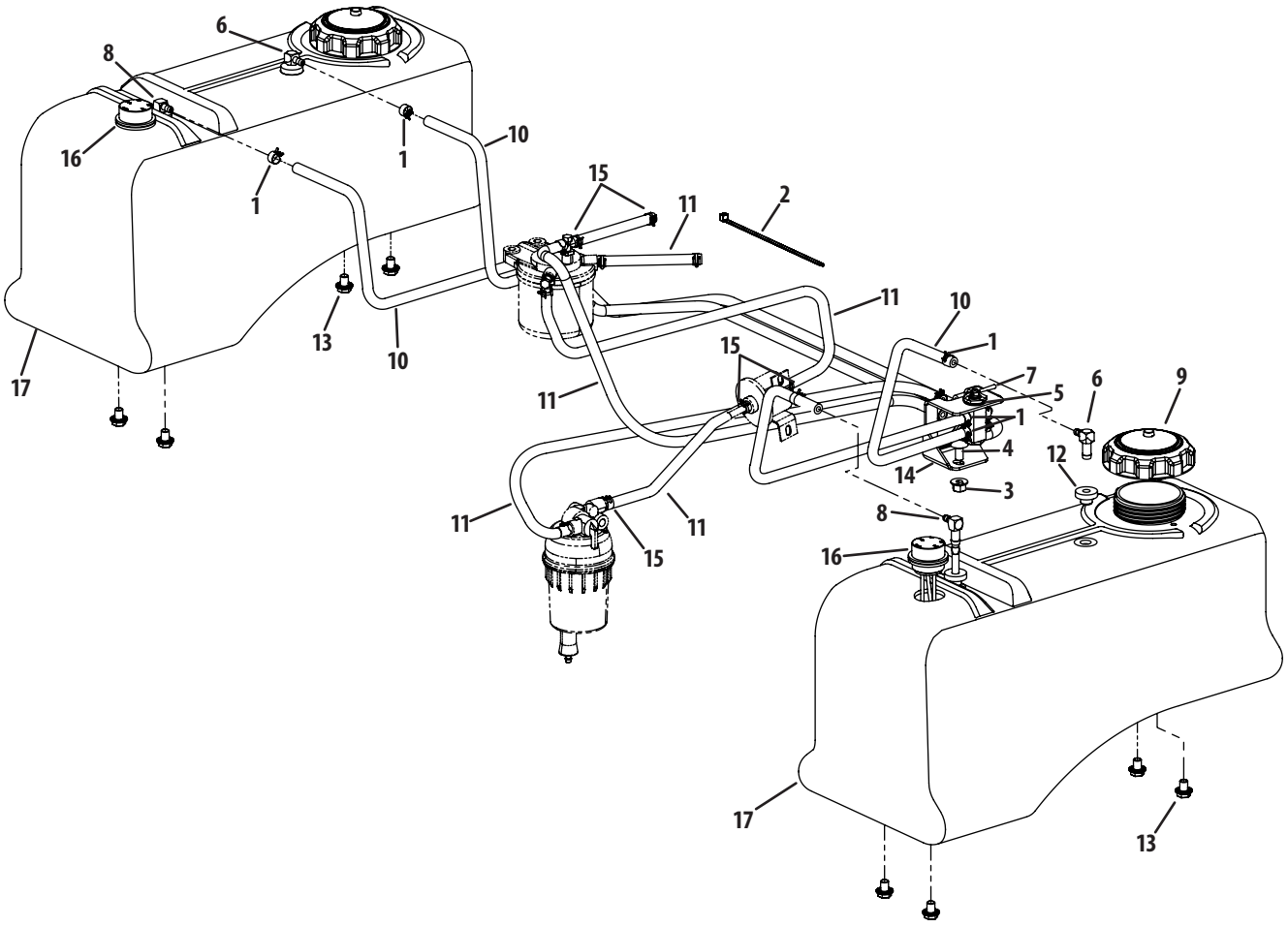

Ref.	Part Number	Description
1	00012235	Hose Clamp
2	725-0157	Cable Tie
3	00022560	Flange Counter Lock Nut, ⅜-16
4	710-3178	Carriage Bolt, ⅜-16 x .75
5	01004340	Washer, .675 x 1.05 x .048
6	01009809P	Fuel Tank Elbow, ¼
7	01009812	Fuel Valve
8	01009821P	Fuel Pick-Up Fitting Valve
9	02001081	Diesel Fuel Cap

Ref.	Part Number	Description
10	02001911-5	Fuel Hose, ¼
11	02002004-3	Fuel Hose, 5⁄16
12	02002253	Fuel Tank Grommet
13	02005013	Hex Flange Screw, ⅜-16 x .500
14	680-00086	Fuel Valve Bracket
15	726-0205	Hose Clamp
16	751-11322	Fuel Gauge
17	751-11325	Fuel Tank w/ Gauge

Hydro Controls

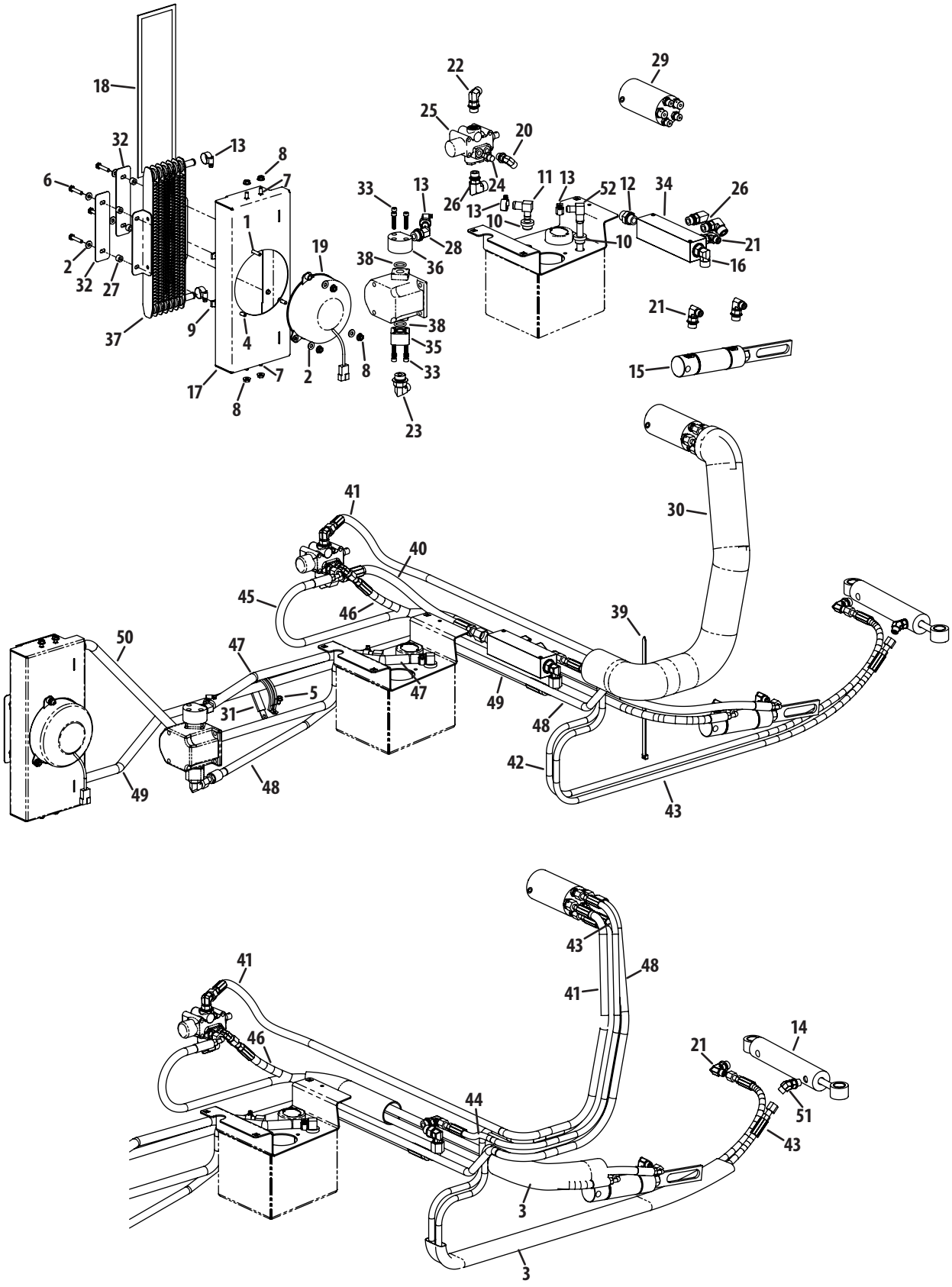

Ref.	Part Number	Description
1	00011447	Hex Screw, ¼-20 x 1.00
2	00012154	Washer, .281 x .625 x .063
3	00012529	Sleeve
4	710-0751	Hex Screw, ¼-20 x .620
5	710-0599	Hex Flange Screw, ¼-20 x .500
6	01000913	Hex Screw, ¼-20 x 1.25
7	01001160	Carriage Bolt, ¼-20 x .620
8	912-3027	Flange Top Lock Nut, ¼-20
9	01008539P	Nut, ¼-20
10	02000296	Grommet, .54 x .78
11	02001151	Elbow Fitting, ⅝ x ½
12	02001975	Hydro Adapter
13	02002392	Hose Clamp
14	02003368P	Steering Cylinder
15	02003930	Hydro Cylinder, 1.50 x 2.75
16	02004258	Hydro Adapter
17	02004473	Radiator Housing Assembly
18	02004480	Heat Exchanger Screen
19	02004481	Fan
20	02004642	Elbow Fitting, 40RB-40RS
21	02004643	Elbow Fitting, 40RS-60RB
22	02004644	Elbow Fitting, 60RB-60RS
23	02004645	Elbow Fitting, 60RS-80RB
24	02004687	Elbow Fitting, 40RB-40RS
25	02004696	Dual Action Lift Hydro Valve
26	02004837	Elbow Fitting, 80RS-60RB
27	02005057	Spacer, .256 x .500 x .330

Ref.	Part Number	Description
28	02005160	45° Fitting, ¾ x ½
29	02005325	Hydro Steering Valve
30	02005462	Anti-Abrasion Sleeve
31	02005672	Loop Clamp, 2.00 x 3.50
32	703-07680	Hydro Cooler Screen Retainer Brkt.
33	710-04991	Socket Head Screw, 6-1.0
34	718-04563	Hydro Manifold, 08 x 06
35	718-04667	Pump Adapter Fitting Mount
36	718-04704	Suction Hydro Fitting, ¾-16
37	918-3132	Oil Radiator
38	721-04188	O-Ring, .734 x .139
39	726-0230	Cable Tie
40	727-04281	Lift Valve to Manifold Hose Assy.
41	727-04304	Lift Valve to Steering Valve Assy.
42	727-04305	Steering Ext. to Steering Valve Hose Assy.
43	727-04306	Steering Ret. to Steering Valve Hose Assy.
44	727-04307	Manifold to Steering Valve Hose Assy.
45	727-04309	Cylinder Ret. to Lift Valve Hose Assy.
46	727-04310	Cylinder Ext. to Lift Valve Hose Assy.
47	727-04312	Tank to Pump Hose Assembly
48	727-04313	Pump to Steering Valve Hose Assy.
49	727-04314	Manifold to Exchanger Hose Assy.
50	727-04315	Exchanger to Tank Hose Assy.
51	727-04317	45° Elbow Fitting
52	737-04260	Elbow, ½ x ⅝ Barb w/ Straw
NS	00008382	Adhesive Backed Foam, ¼ x 4

Hydro Hose & Pump Assembly

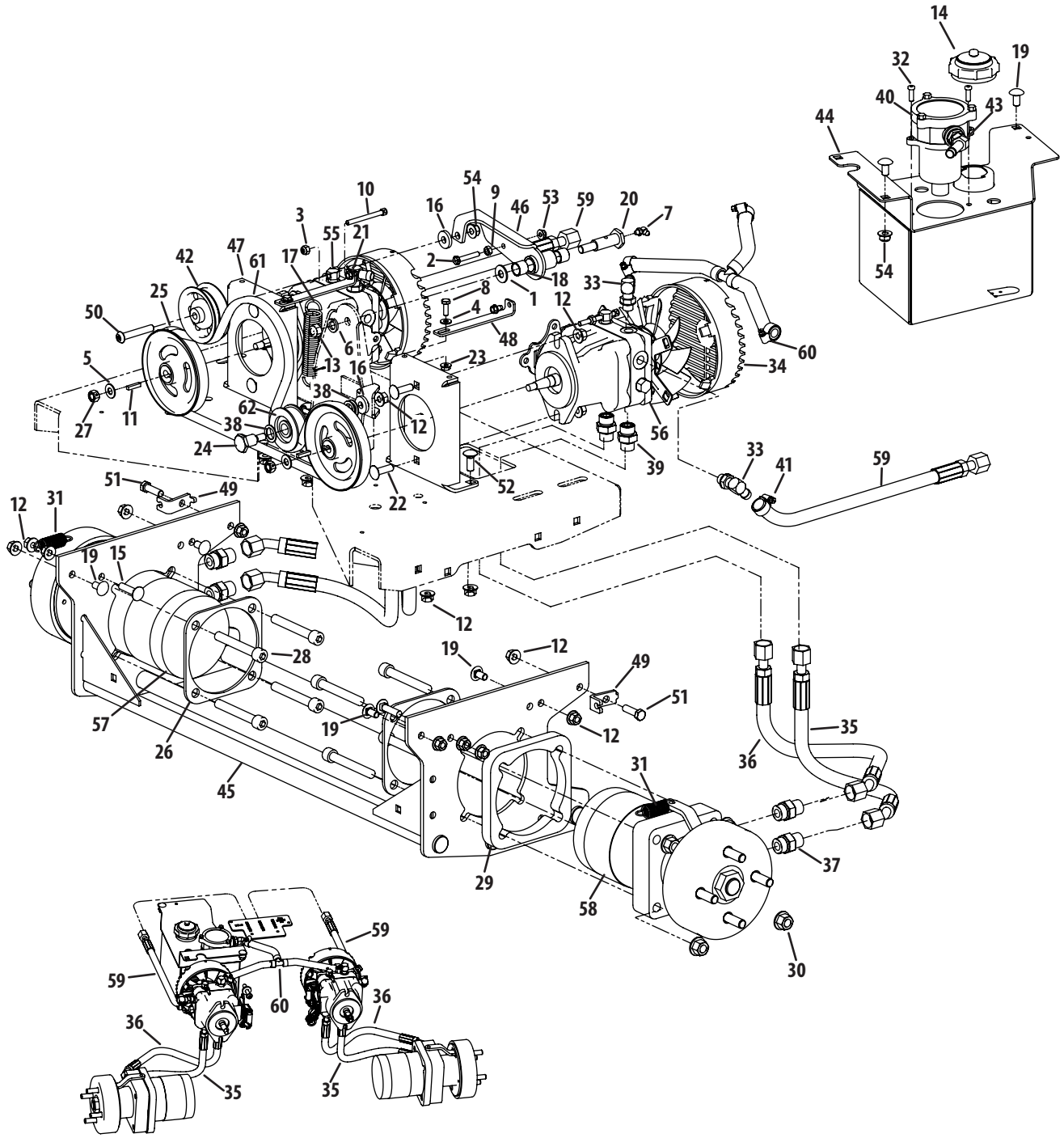

Ref.	Part Number	Description
1	00006168	Washer, .438 x 1.00 x .078
2	00011446	Hex Screw, ¼-20 x 1.50
3	00012152	Nut, ¼-20
4	00012154	Washer, .281 x .625 x .063
5	00012158	Washer, .406 x .813 x .063
6	00012195	Lock Washer, .438 x .762 x .113
7	737-3004	Grease Fitting, ¼-28 x .788
8	00013131	Hex Screw, ¼-20 x .750
9	00013291	Nut, ¼-20
10	00019962	Screw, ¼-20 x .500
11	00020628	Key, .188 x .188 x .875
12	00022560	Flange Counter Lock Nut, ⅜-16
13	712-0290	Nut, 7⁄16-14
14	00030261	Hydro Oil Tank Cap
15	00030276	Carriage Bolt, ⅜-16 x 1.50
16	00083192	Washer, .390 x 1.00 x .180
17	01000199	Extension Spring, 1.00 x 5.00 x .125
18	01000308	Sleeve Bearing, .628 x.753 x.625
19	710-3178	Carriage Bolt, ⅜-16 x .75
20	738-3108	Shoulder Bolt, 7⁄16-14 x .60 x 1.6
21	710-0599	Hex Flange Screw, ¼-20 x .500
22	710-3034	Carriage Bolt, ⅜-16 x 1.25
23	912-3027	Flange Top Lock Nut, ¼-20
24	01003536	Shoulder Bolt, ⅜-16 x .625 x .830
25	01006799	Hydro Pump Pulley
26	01006949	Hydro Motor Back-Up Plate
27	01007309	Counter Lock Nut, ⅜-24
28	01007791	Socket Cap Screw, ½-13 x 3.50
29	01009775	Hydro Wheel Motor Spacer
30	01010119	Flange Top Lock Nut, ½-13
31	02000401	Extension Spring, .74 x 2.7 x .075

Ref.	Part Number	Description
32	02000841	Socket Cap Screw, ¼-20 x .750
33	02001160	Elbow Fitting, 9⁄16 x ½
34	02001169	Pump Fan Shroud
35	02001178	Pump Motor Hose Assembly, 16.38
36	02001179	Pump Motor Hose Assembly, 18.75
37	02001715	Hydro Adapter, 8 x 10
38	02001891	Washer, .625 x 1.00 x .048
39	02001975	Hydro Adapter, 8 x 8
40	02002257	Hydro Filter
41	02002392	Hose Clamp
42	02004558	Pulley
43	02005160	45° Fitting, ¾ x ½
44	680-00056	Hydro Tank Assembly
45	680-00059	Wide Motor Frame
46	680-00077	Pump Idler
47	680-00088	Pump Assembly Mount Bracket
48	703-07669	Pump Mount Brace
49	703-07750	Brake Cable Bracket
50	710-05066	Screw, ⅜-16 x 2.25
51	710-3005	Hex Screw, ⅜-16 x 1.25
52	710-3168	Carriage Bolt, ⅜-16 x 1.00
53	712-04064	Flange Lock Nut, ¼-20
54	712-04065	Flange Lock Nut, ⅜-16
55	918-04710	LY Hydro Pump
56	718-04711P	RH Hydro Pump
57	918-04717	LH Hydro Motor w/ Brake
58	918-04718	RH Hydor Motor w/ Brake
59	727-04284	Wheel Pump to Manifold Hose Assy.
60	727-04342	Return Tee Hydro Hose
61	954-04267	Belt
62	756-04431	Idler Pulley

Control Group

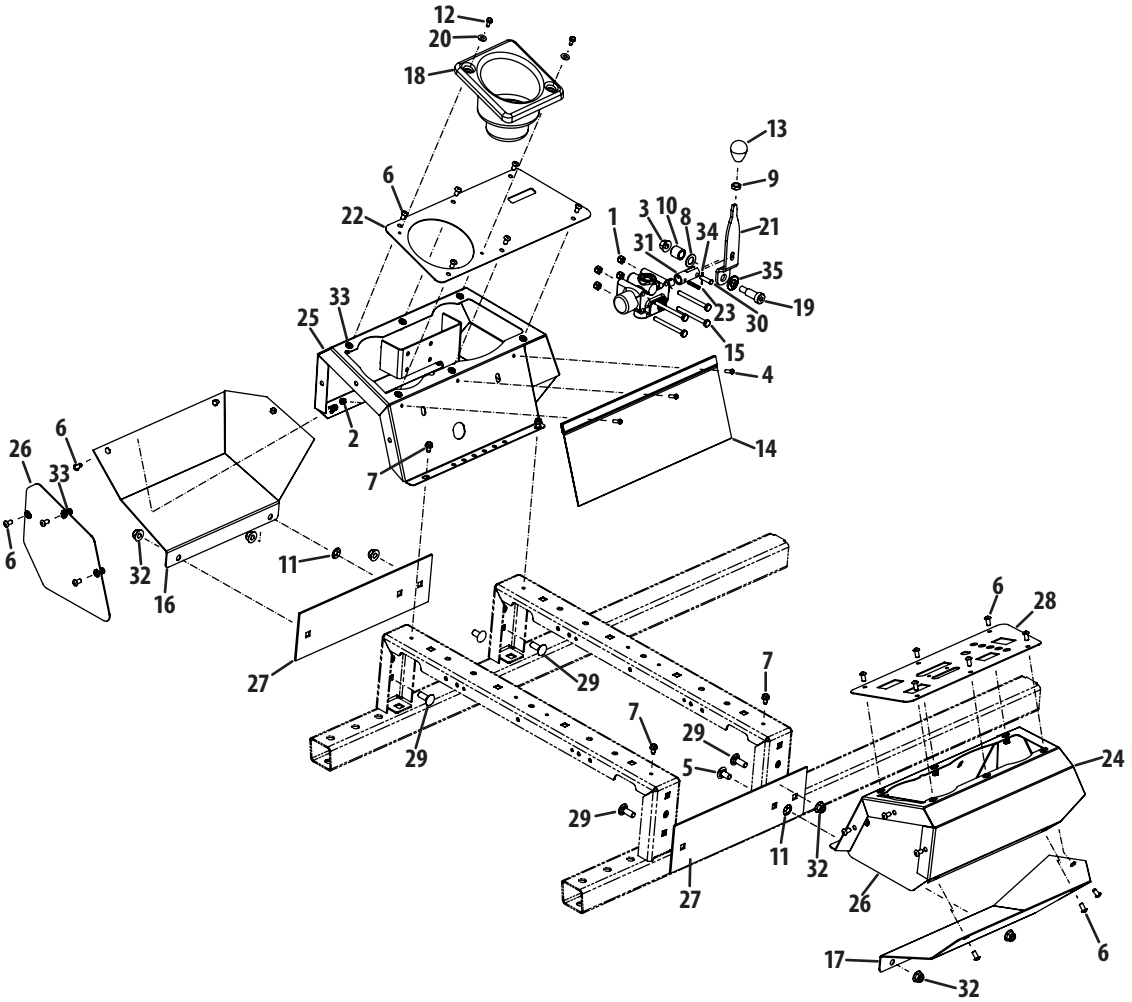

Ref.	Part Number	Description
1	00012152	Nut, ¼-20
2	00014608	Nut, #10-32
3	00022560	Flange Counter Lock Nut, ⅜-16
4	00030906	Machine Screw, #10-32 x .625
5	710-3178	Carriage Bolt, ⅜-16 x .75
6	710-3256	Screw, ¼-20 x .500
7	710-0599	Hex Flange Screw, ¼-20 x .500
8	936-0160	Washer, .536 x .930 x .050
9	01002511	Jam Nut, ⅜-16
10	01004546	Spacer, .500 x .750 x .700
11	01008225	Push Nut, .335 x .780 x .015
12	01008531P	Flange Screw, #10-32 x .500
13	01009369	Lever Knob, ⅜-16
14	02000362	Debris/Storage Bag
15	02000925	Hex Screw, ¼-20 x 2.75
16	02002785	LH Lower Panel
17	02002786	RH Lower Panel
18	02002874	Cup Holder
19	02003603	Shoulder Bolt, ⅜-16 x .50 x 1.0
20	02003725	Washer, .300 x .550 x .047
21	02004138	Lift Valve Lever Bracket
22	02004142	LH Cover Control Plate
23	02004622	Spirol Pin, 3⁄16 x 1.0
24	680-00119	RH Control Panel Assembly
25	680-00121	LH Bracket Control Panel Assembly
26	703-07328	Panel Plate
27	703-07330	Lower Side Panel
28	703-07603	RH Cover Control Plate
29	710-3168	Carriage Bolt, ⅜-16 x 1.00
30	711-04214	Pin, .25 x .9375
31	711-1614	Valve Link
32	712-04065	Flange Lock Nut, ⅜-16
33	712-04199	Nut, ¼-20
34	714-0127	Cotter Pin, 1⁄16 x .75
35	936-0253	Bell Washer, .525 x 1.00 x .050

Electrical

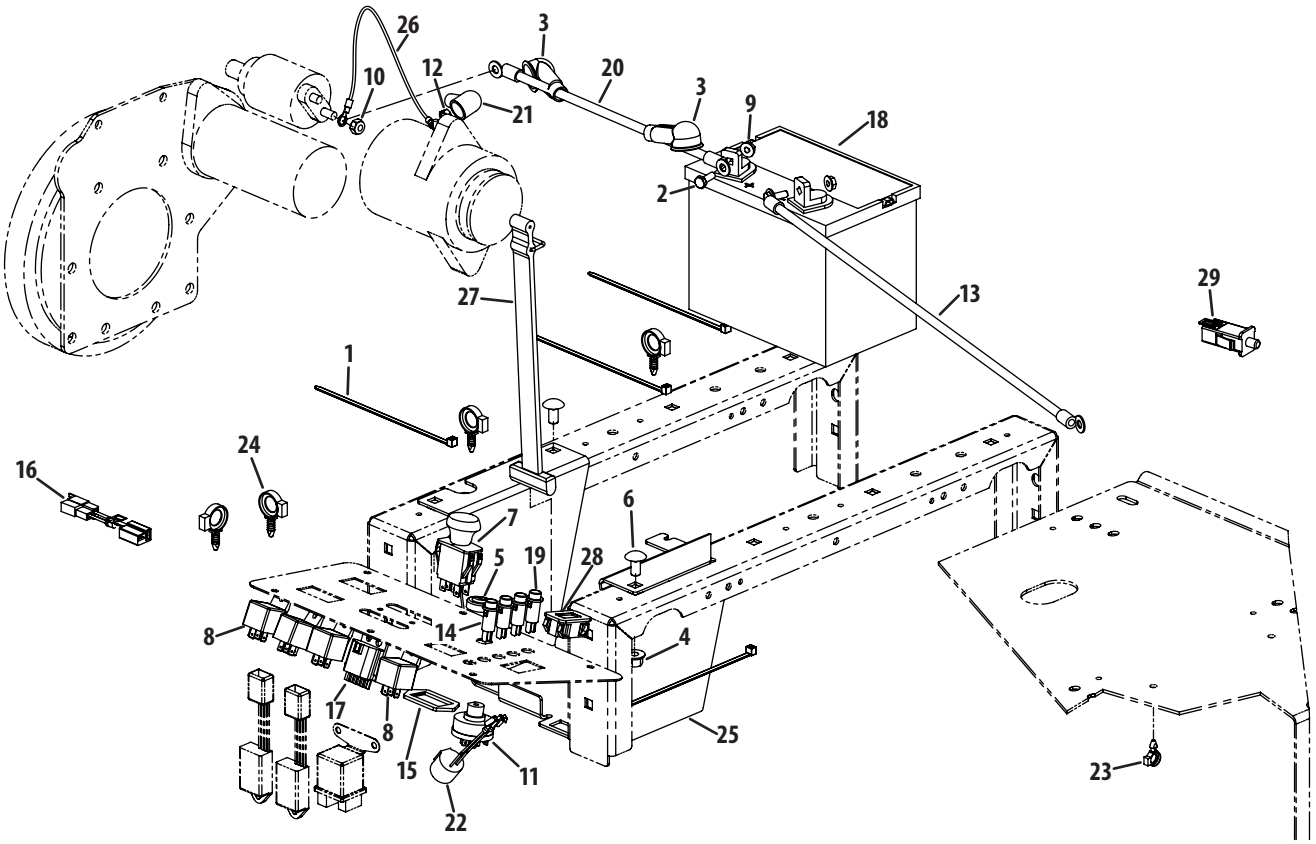

Ref.	Part Number	Description
1	725-0157	Cable Tie
2	00013131	Hex Screw, ¼-20 x .75
3	00013258	Boot Terminal, 1.00 x 2.50
4	00022560	Flange Counter Lock Nut, ⅜-16
5	00032097	Nut, ⅝-32 w/ Cap
6	710-3178	Carriage Bolt, ⅜-16 x .75
7	01002111	PTO Switch
8	01002251	Relay, 12V
9	912-3027	Flange Top Lock Nut, ¼-20
10	01003561	Nut, M8-1.25
11	01003581P	Ignition Switch
12	01007088	Counter Lock Nut, M6-1
13	01009623	Battery Cable, Black
14	01009816P	Indicator Light
15	01009905	Return Switch PTO Bracket
16	01009921	Adapter

Ref.	Part Number	Description
17	02000907	Time-Delay Interlock Shut Down
18	925-0453G	Battery
19	02001350	Amber Indicator Light
20	02002059	Battery Cable, Red
21	02002346	Boot Terminal, .675 x 1.65
22	02002588	High-Temperature Alarm
23	02003038	CDT Clip, ⅜
24	02003775	CDT Clip, ⅝
25	02004355	Batter Bracket
26	629-04177	Battery/Alternator Charge Wire
27	723-3064	Battery Strap
28	725-05120	Hour Meter
29	925-3191A	Plunger Switch
NS	629-04175	Wire Harness
NS	629-04176	Wire Harness

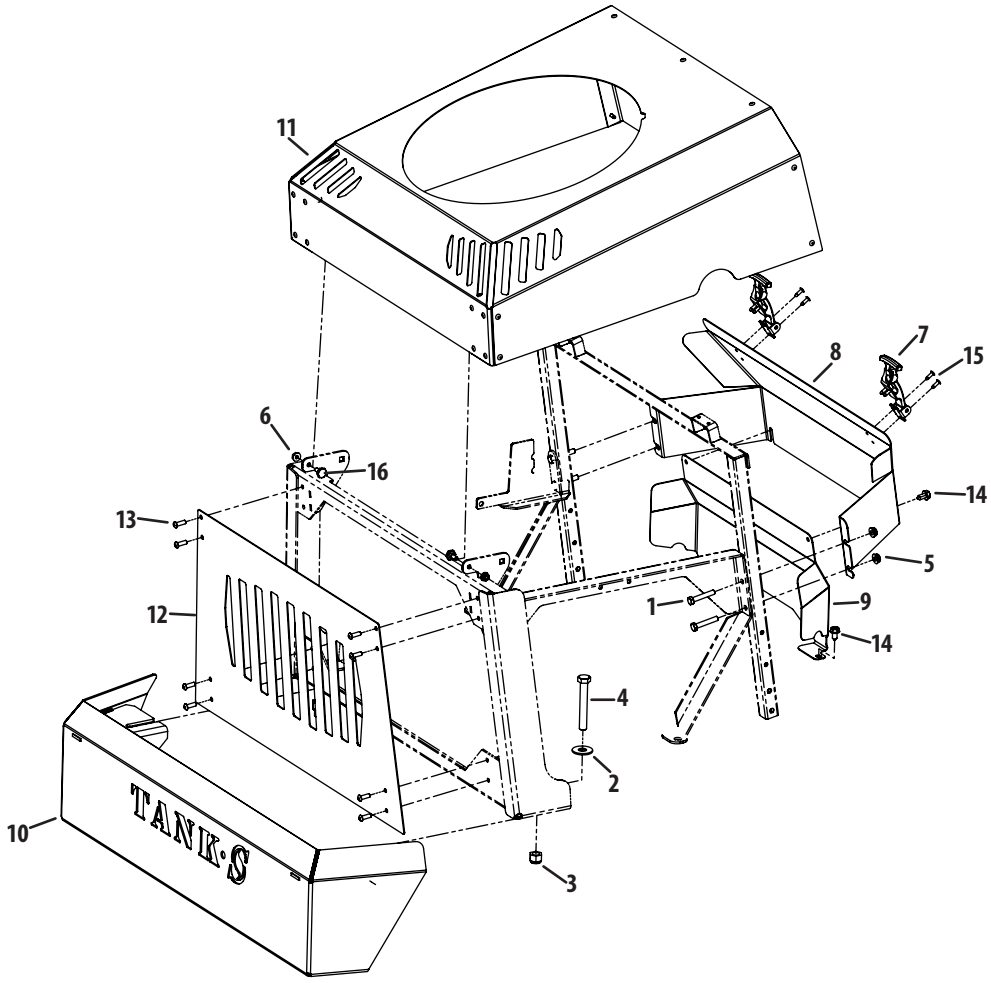

Ref.	Part Number	Description
1	00006129	Hex Screw, 5⁄16-18 x 1.75
2	00011459	Washer, .563 x 1.38 x .109
3	00012428	Nut, ½-13
4	01000226	Hex Screw, ½-13 x 3.50
5	712-3004A	Flange Counter Lock Nut, 5⁄16-18
6	912-3027	Flange Top Luck Nut, ¼-20
7	01005869P	T-Handle Draw Latch
8	680-00101	Top Guard Plate
9	680-00102	Front Bottom Guard Plate
10	680-00125	Bumper Assembly
11	680-00134	Hood Assembly
12	703-07722	Engine Cover
13	710-0924	Machine Screw, ¼-20 x 0.750
14	710-0604A	Hex Washer Screw, 5⁄16-18 x 0.625
15	728-04033	Rivet, 3⁄16
16	938-0255	Shoulder Screw, .375 x .181

Control Assembly

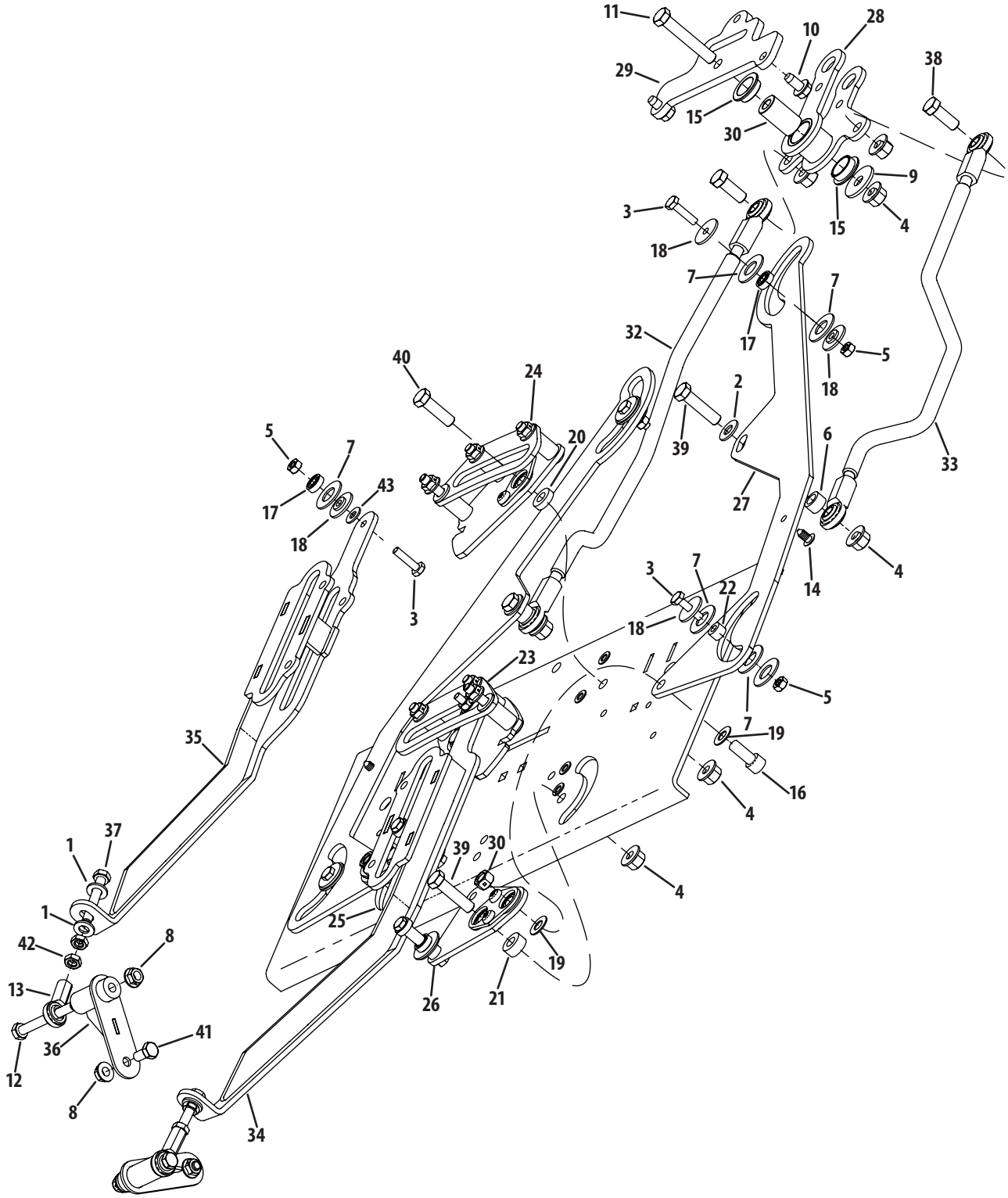

Ref.	Part Number	Description
1	00009812	Washer, .344 x .688 x .063
2	00012158	Washer, .406 x .813 x .063
3	00013416	Hex Screw, ¼-20 x 1.00
4	00022560	Flange Counter Lock Nut, ⅜-16
5	00023041	Counter Lock Nut, ¼-20
6	00081551	Spacer, .407 x .625 x .375
7	01000101	Washer, .550 x 1.25 x .068
8	712-3004A	Flange Counter Lock Nut, 5⁄16-18
9	936-0133	Washer, .411 x 1.25 x 1.00
10	01001161	Flange Screw, 5⁄16-18 x .625
11	01001366	Hex Screw, ⅜-16 x 2.25
12	01001972	Hex Screw, 5⁄16-18 x 2.75
13	01008410P	Rod End, 5⁄16
14	01008801	Rivet, ¼ x .625
15	02003163	Flange Bearing, .752 x 1.25 x .305
16	02003309	Socket Head Screw, ⅜-16 x .88
17	02003377	Ball Bearing, .25 x .625 x .196
18	02003379	Shoulder Spacer, .251 x 1.00 x .06
19	02005054	Spacer, .381 x .750 x .040
20	02005055	Spacer, .381 x .75 x .150
21	02005056	Spacer, .381 x .750 x .312

Ref.	Part Number	Description
22	02005057	Spacer, .256 x .500 x .330
23	02005290	LH Speed Control Cam Assembly
24	02005291	RH Speed Control Cam Assembly
25	02005292	LH Steering Pivot Assembly
26	02005293	RH Steering Pivot Assembly
27	02005463	Control Link Plate
28	02005468	Front Steering Pivot Assembly
29	02005482	Steering Pivot Mount Plate
30	02005483	Spacer, .385 x .750 x 1.28
31	936-0463	Flat Washer, .25 x .630 x .0515
32	603-04618	LH Control Rod Assembly
33	603-04619	RH Control Rod Assembly
34	680-00115	Pump Control Arm Assembly
35	680-00116	RH Pump Control Arm Assembly
36	680-00118	Pump Control Spacer Assembly
37	710-05131	Hex Screw, 5⁄16-24 x 2.00
38	710-0514	Hex Screw, ⅜-16 x 1.00
39	710-0520	Hex Screw, ⅜-16 x 1.50
40	710-3005	Hex Screw, ⅜-16 x 1.25
41	710-3025	Hex Screw, 5⁄16-18 x .625
42	712-3025	Jam Nut, 5⁄16-24

Front Axle Assembly

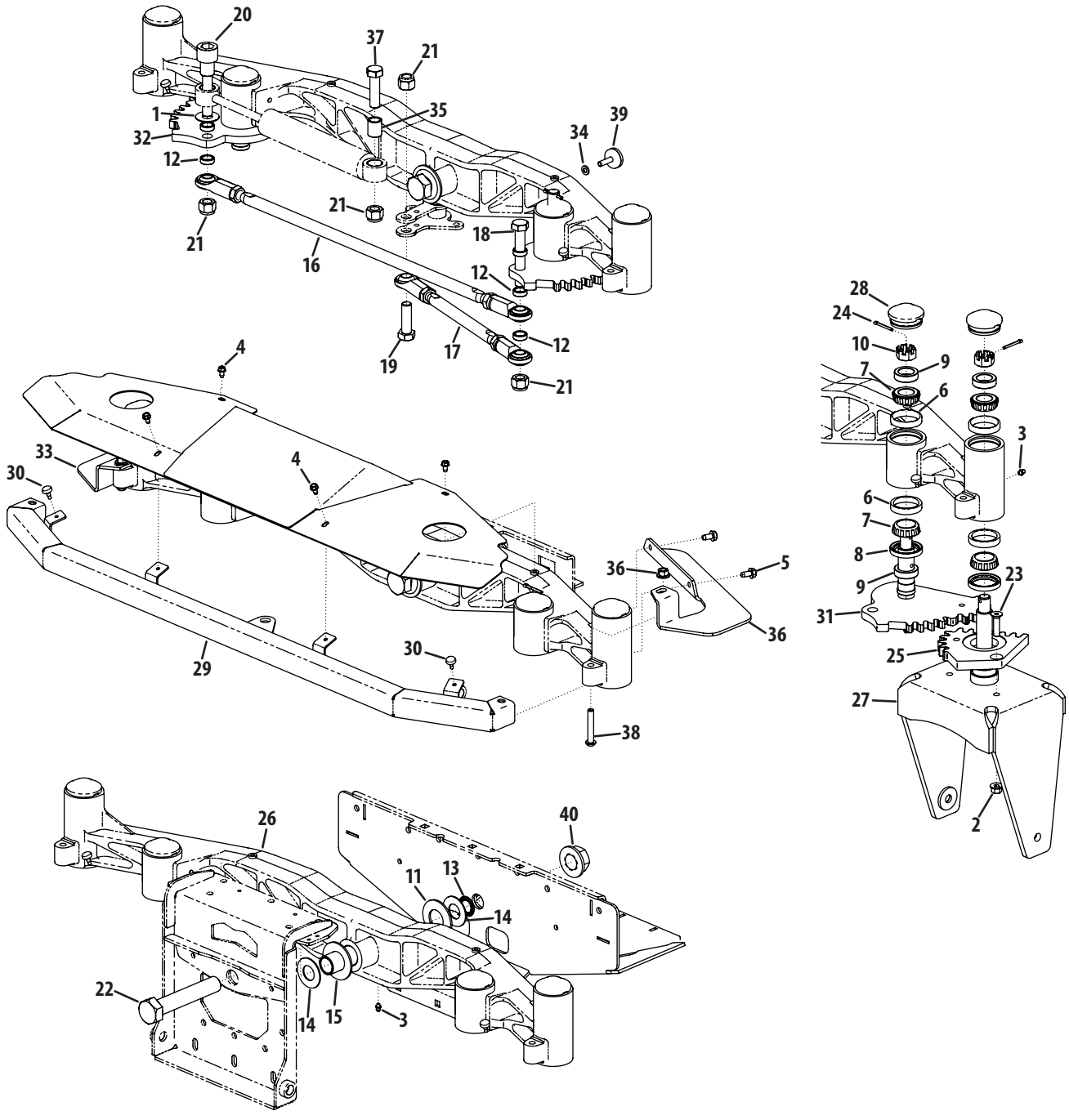

Ref.	Part Number	Description
1	00002766	Washer, .655 x 1.5 x .055
2	00022560	Flange Counter Lock Nut, 3/8-16
3	00060078	Grease Fitting, 1/4-28
4	710-0599	Hex Flange Screw, 1/4-20 x .500
5	01001161	Flange Screw, 5/16-18 x .625
6	01002620	Bearing Cup, L44610
7	01002621	Cone Bearing, L44643
8	01002622	Seal, 14858
9	01002624	Seal Ring
10	712-0359	Slot Nut, 3/4-16
11	01006294	Bell Washer, 1.25 x 2.50 x .180
12	01008404P	Spacer, .635 x .880 x .312
13	01009997	Self-Lock External Retainer
14	02000588	Washer, 1.00 x 2.00 x .075
15	02000589	Spacer, 1.00 x 1.25 x 3.47
16	02003187	Tie Rod Assembly, 1/2-20 x 28
17	02003217	Tie Rod Assembly, 5/8-18 x 14
18	02003220	Hex Screw, 5/8-11 x 4.00
19	02003222	Hex Screw, 5/8-11 x 1.75
20	02003357	Shoulder Bolt, .872 x 1.030 x 2.88

Ref.	Part Number	Description
21	712-3016	Hex Lock Nut, 5/8-11
22	02003804	Hex Screw, 1-14 x 5.5
23	02005073	Hex Screw, 3/8-16 x 1.50
24	714-0162	Cotter Pin, 5/32 x 1.25
25	717-04729	Yoke Steering Gear
26	719-04517	Axle
27	603-04645	Yoke Assembly
28	731-07348	Axle Grease Cap
29	680-00072	Axle Bumper Assembly
30	935-0199A	Rubber Bumper, .62 x .22
31	680-00074	LH Steering Gear Assembly
32	680-00075	RH Steering Gear Assembly
33	703-07259	RH Gear Cover Plate
34	936-0119	Lock Washer, 5/16
35	750-05335	Spacer, .635 x .875 x 1.031
36	703-07471	LH Gear Cover Plate
37	710-05000	Hex Screw, 5/8-11 x 2.25
38	710-05066	Screw, 3/8-16 x 2.25
39	710-05068	Adjustable Skid Shoe
40	712-04191	Flange Top Lock Nut, 1.0-14

Steering Column

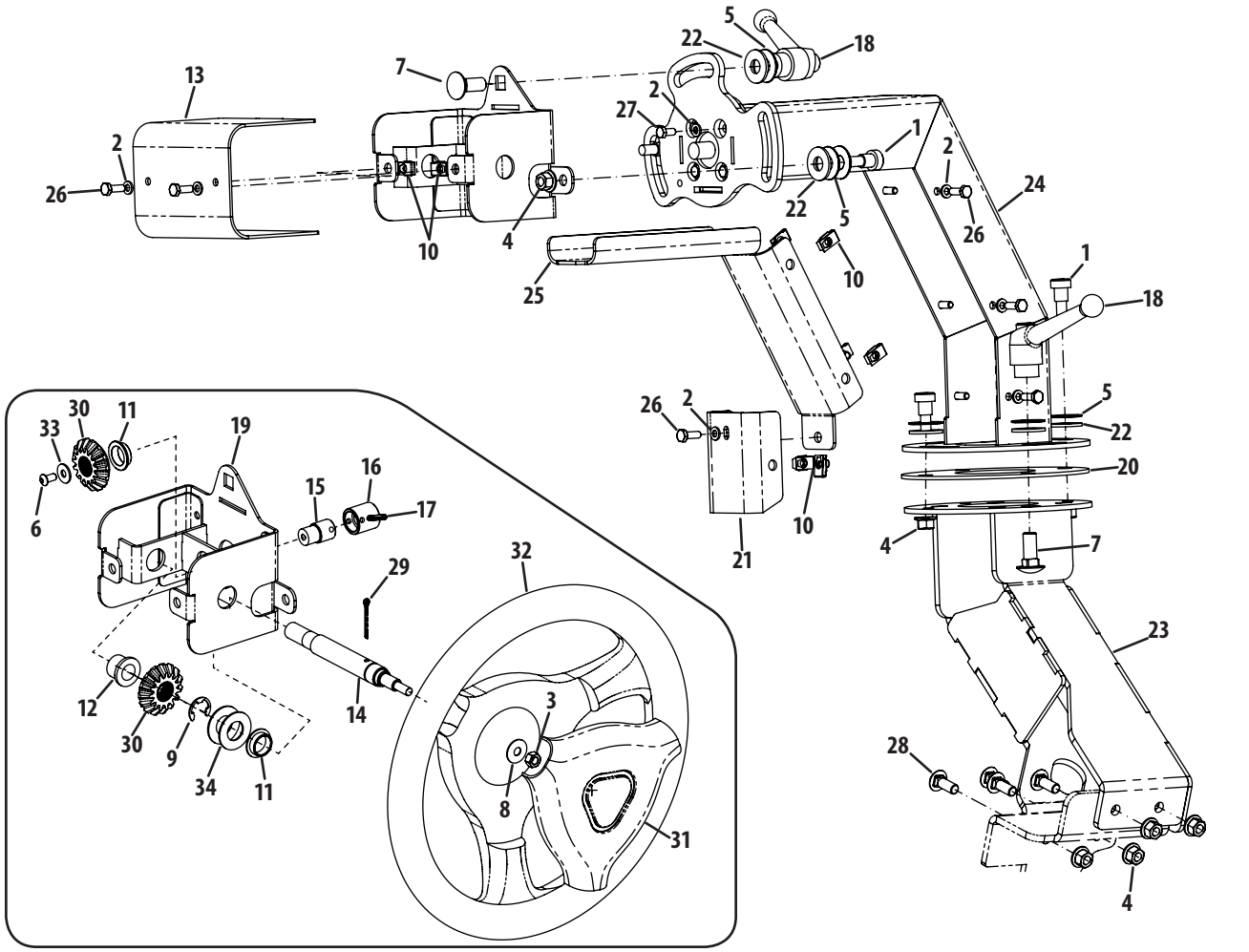

Ref.	Part Number	Description
1	00011450	Shoulder Bolt, ⅜-16 x .495 x .500
2	936-0329	Lock Washer, .250 x .489 x .110
3	912-3057	Nut, 5⁄16-24
4	00022560	Flange Counter Lock Nut, ⅜-16
5	00070022	Washer, .533 x 1.25 x .058
6	710-3256	Screw, ¼-20 x .500
7	01000517	Carriage Bolt, ½-13 x 1.25
8	936-0425	Bell Washer, .325 x .930 x .045
9	01003994	Retainer Clip
10	01008539P	U-Nut, ¼-20
11	02003163	Flange Bearing, .752 x 1.25 x .305
12	02004002	Flange Slv. Bearing, .630 x .875 x .75
13	02004107	Box Steering Cover
14	02004109	Steering Shaft
15	02004110	Valve Steering Shaft
16	02004308	Steering Valve Spline Hub
17	02004622	Spirol Pin, 3⁄16 x 1.0

Ref.	Part Number	Description
18	02005058	Steering Adjust/Lock Lever
19	02005378	Steering Box Housing Assembly
20	02005396	Wear Swing Plate
21	02005495	Steering Column Cover
22	02005512	Washer, .531 x 1.250 x .100
23	680-00082	Base Column Assembly
24	680-00093	Upper Steering Column Assembly
25	703-07470	Upper Steering Column Cover
26	710-3015	Hex Screw, ¼-20 x .75
27	710-3140	Hex Screw, M6-1.00 x 14
28	710-3168	Carriage Bolt, ⅜-16 x 1.00
29	914-0470	Cotter Pin, ⅛ x 1.25
30	917-1019	Splined Bore Miter Gear
31	731-06459	Steering Wheel Cover
32	731-3209	Steering Wheel
33	736-0173	Flat Washer, .28 x .74 x .063
34	736-0188	Flat Washer, .76 x 1.49 x .06

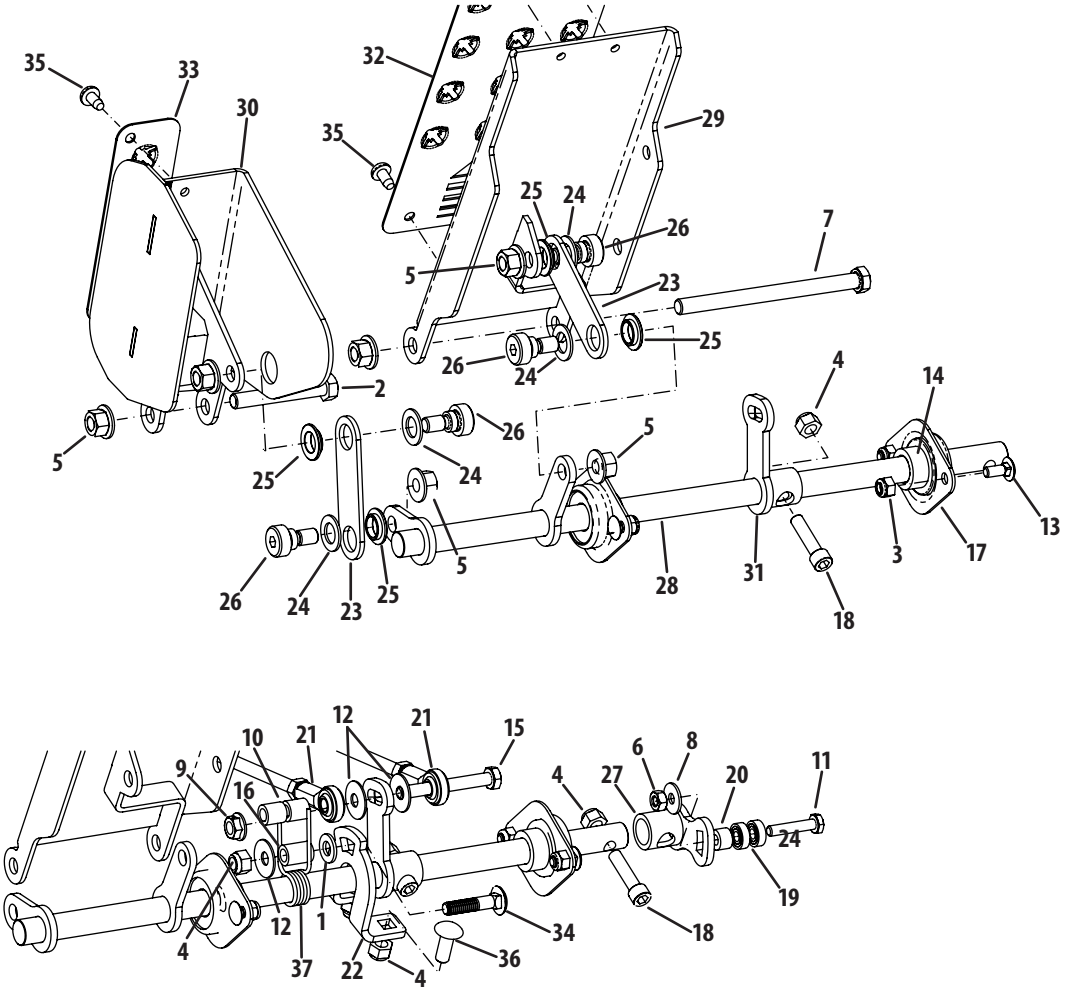

Ref.	Part Number	Description
1	00009812	Washer, .344 x .688 x .063
2	00011861	Hex Screw, ⅜-16 x 2.50
3	00012152	Nut, ¼-20
4	00012165	Nut, 5⁄16-18
5	00022560	Flange Counter Lock Nut, ⅜-16
6	00023041	Counter Lock Nut, ¼-20
7	00034167	Hex Screw, ⅜-16 x 5.00
8	01000489	Bell Washer, .265 x .75 x .062
9	712-3004A	Flange Counter Lock Nut, 5⁄16-18
10	01000799	Spacer, .315 x .500 x .520
11	01000913	Hex Screw, ¼-20 x 1.25
12	936-0425	Bell Washer, .325 x .930 x .045
13	01001160	Carriage Bolt, ¼-20 x .620
14	01006350	Shaft Collar, .625 x 1.00 x .438
15	01007122P	Hex Screw, 5⁄16-18 x 2.50
16	01007984	Spacer, .315 x .500 x .699
17	02000487	Flange Bearing
18	02002994	Screw, 5⁄16-18 x 1.25
19	02003377	Ball Bearing, .25 x .625 x .196

Ref.	Part Number	Description
20	02005057	Spacer, .256 x .500 x .330
21	02005464	Speed Control Link Assembly
22	02005547	Bracket
23	02005549	Pedal Control Link
24	02005560	Washer, .51 x .88 x .06
25	02005568	Flange Bearing, .502 x .875 x .180
26	02005570	Shoulder Bolt, ⅜-16 x .50 x .25
27	02005628	Lockout Hub Assembly
28	680-00103	Pedal Bellcrank Assembly
29	680-00132	Forward Pedal Assembly
30	680-00133	Reverse Pedal Assembly
31	680-00135	Control Arm Assembly
32	703-07763	Forward Pedal Grip
33	703-07764	Reverse Pedal Grip
34	710-0262	Carriage Bolt, 5⁄16-18 x 1.50
35	710-05070	Screw, ¼-20 x .5
36	710-3105	Carriage Bolt, 5⁄16-18 x .875
37	732-04721	Torsion Spring, .66 x .56

Deck Lift Assembly

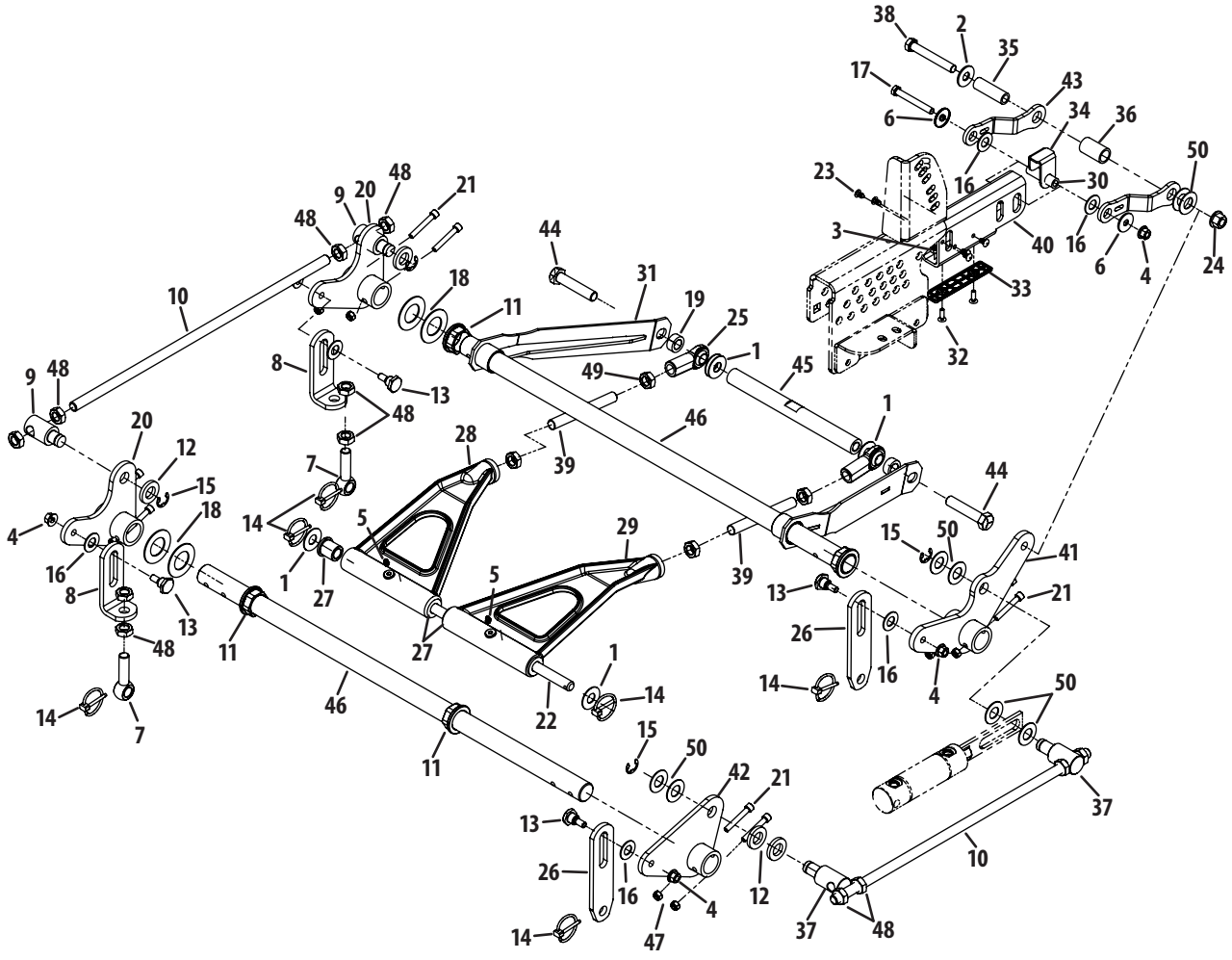

Ref.	Part Number	Description
1	00002766	Washer, .655 x 1.5 x .055
2	00011459	Washer, .563 x 1.38 x .109
3	00012152	Nut, ¼-20
4	00022560	Flg. Cnter. Lock Nut, ⅜-16 (60" Deck)
—	912-0431	Flange Lock Nut, ⅜-16 (72" Deck)
5	00060078	Grease Fitting, ¼-28
6	936-0133	Washer, .411 x 1.25 x 1.00
7	01001744	Eye Bolt, ⅝-16 x 2.63
8	01001746	Eye Bolt Link, ⅝
9	01001855	Lift Ferrule
10	01001857	Lift Connecting Rod
11	01001930	Hex Flange Bearing
12	01003123	Spacer, .812 x 1.47 x .218
13	01003535	Shoulder Bolt, ⅜-16 x .625 x .437
14	01003993	Lynch Pin, 3⁄16 x 1.25
15	01003994	Retainer Clip
16	01004003	Washer
17	01004127	Hex Screw, ⅜-16 x 3.00
18	01006408	Washer, 1.25 x 2.25 x .075
19	01007527	Spacer, .630 x 1.06 x .440
20	01007680	Assembly Bellcrank
21	01007962	Screw, 5⁄16-18 x 2.0
22	01008453	Deck Lift Link Rod (60" Deck)
—	01007544	Deck Lift Link Rod (72" Deck)
23	01008801	Rivet, ¼ x .625
24	01010119	Flange Top Lock Nut, ½-13
25	02000293	RH Rod End, ⅝

Ref.	Part Number	Description
26	02000561	Deck Lift Link
27	02002384	Flange Bearing
28	02002708P	LH Lift Brace Bearing
29	02002709P	RH Lift Brace Bearing
30	02003043	Spacer, .375 x .625 x 2.20
31	02003257	Front Frame Support Assembly
32	02003505	Flat Head Screw, ¼-20 x .750
33	02003749	Wear Plate, 1.125 x 5.0
34	02003942	Lock Bracket
35	02003944	Spacer, .510 x .750 x 2.38
36	02003945	Spacer, .765 x 1.00 x 1.70
37	02004280	Lift Ferrule, 1.938
38	02004518	Hex Screw, ½-13 x 3.5
39	02004692	Rod, ⅝-18 x 5.5 (60" Deck)
—	02004691	Rod, ⅝-18 x 3.5 (72" Deck)
40	02005103	Tube, 3.0 x 1.5
41	02005350	Hydro Assist Bellcrank
42	02005352	Lift Bellcrank Assembly
43	02005354	Loft Offset Yoke Bracket
44	710-04813	Hex Screw, ⅝-11 x 3.00
45	711-05072	Front Lift Link Mount Shaft
46	711-05216	Deck Lift Shaft
47	712-0429	Hex Lock Nut, 5⁄16 -18
48	912-3015	Jam Nut, ⅝-11
49	712-3056	Jam Nut, ⅝-18
50	736-0188	Flat Washer, .76 x 1.49 x .06

Brake Pedal Assembly

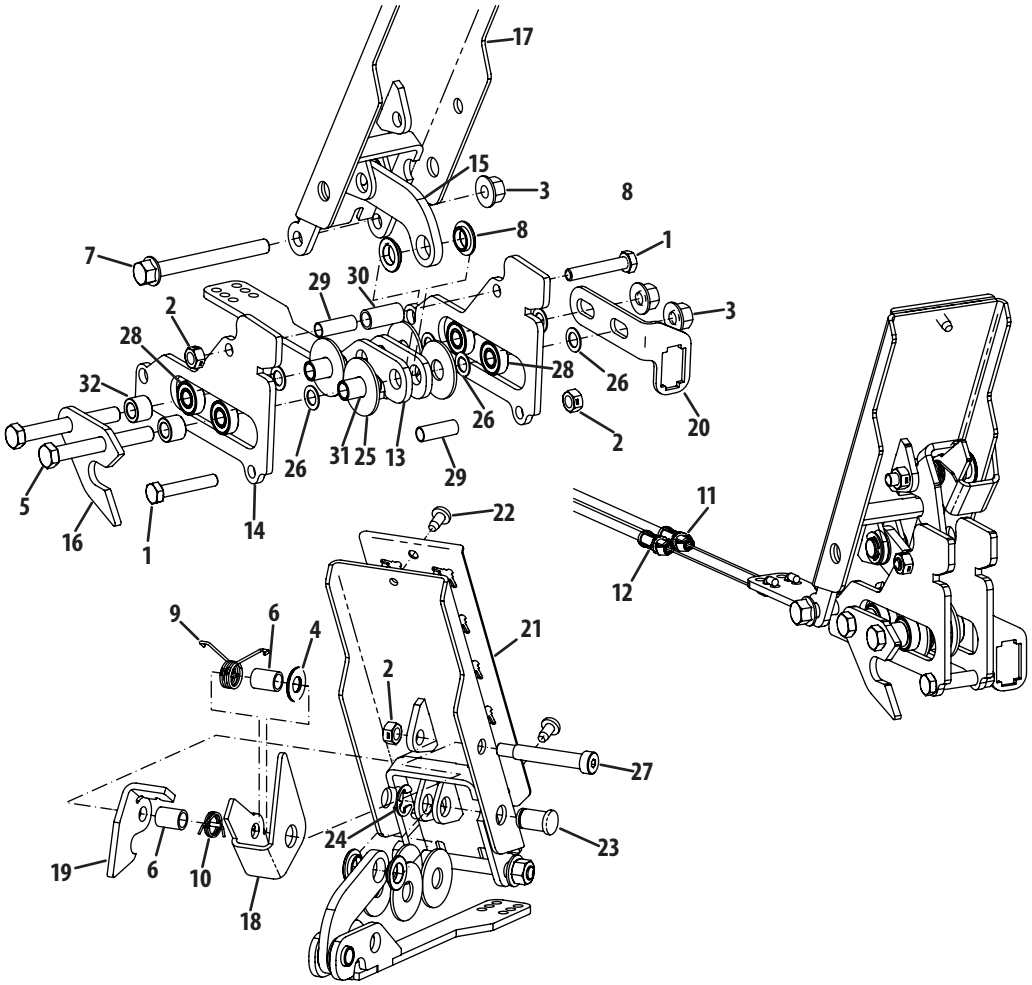

Ref.	Part Number	Description
1	00006129	Hex Screw, 5⁄16-18 x 1.75
2	00022547	Counter Lock Nut, 5⁄16-18
3	00022560	Flange Counter Lock Nut, 3⁄8-16
4	00061053	Washer, .416 x .875 x .046
5	01004127	Hex Screw, 3⁄8-16 x 3.00
6	02003436	Spacer, .380 x .500 x .667
7	02003666	Hex Screw, 3⁄8-16 x 3.50
8	02005568	Flange Bearing, .502 x .875 x .180
9	02005591	Torsion Spring
10	02005592	Torsion Spring
11	02005606P	LH Brake Cable
12	02005607P	RH Brake Cable
13	02005612	Brake Carrier Assembly
14	02005703	Brake Roller Guide Bracket
15	02005714	Brake Control Link
16	02005718	Lockout Plate

Ref.	Part Number	Description
17	603-04639	Brake Pedal Assembly
18	703-06762	Park Engagement Bracket
19	703-06766	Brake Hook Bracket
20	703-06975	Brake Switch Mount Bracket
21	703-07762	Brake Pedal Grip
22	710-05070	Screw, 1⁄4-20 x .5
23	711-05058	Pin, .500 x .804
24	916-0104	E-Ring
25	736-04407	Flat Washer, .531 x 1.5 x .08
26	736-04418	Washer, .39 x .62 x .03
27	738-04360	Shoulder Screw, 5⁄16-18 x .375 x 2.00
28	741-04371	Bearing, .375 x .875
29	750-05071	Spacer, .319 x .375 x 1.056
30	750-05072	Spacer, .384 x .500 x 1.000
31	750-05178	Spacer, .38 x .5 x .955
32	750-05180	Spacer, .385 x .625 x .458

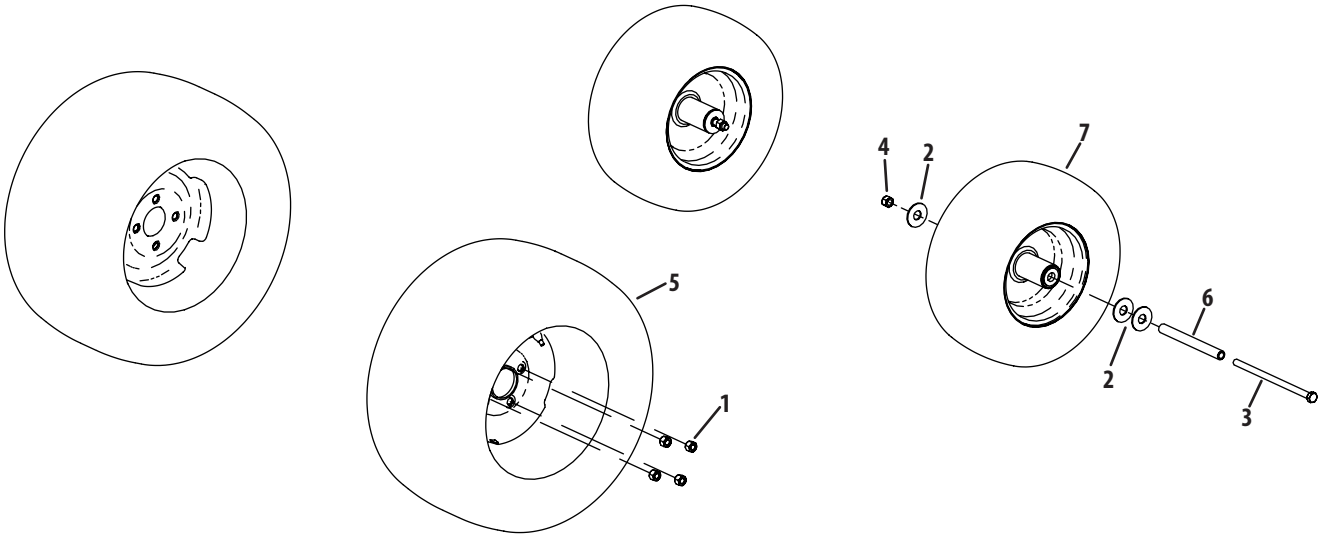

Ref.	Part Number	Description
1	00012187	Lug Nut, ½-20
2	736-3014	Washer, .781 x 2.00 x .105
3	01009288	Hex Screw, ½-20 x 9.50
4	02002299	Nut, ½-20, Lock
5	02002668	Wheel Assembly, 24 x 12.00-12
6	02003355	Spacer, .51 x .75 x 7.49
7	02003396	Front Wheel Assembly, 16 x 6.50-8

Engine Accessories

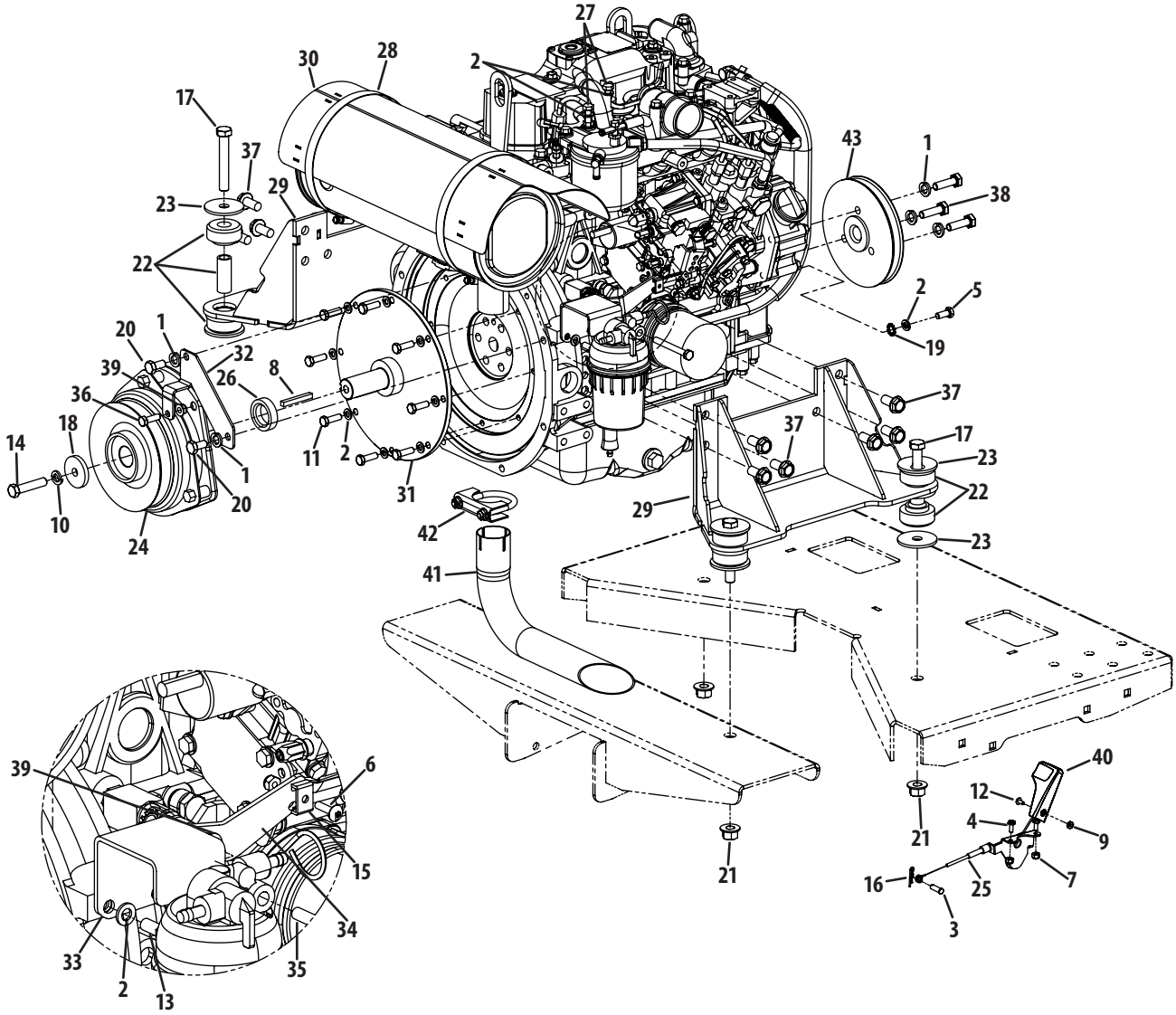

Ref.	Part Number	Description
1	00012062	Washer, 10 x 17.8 x 3.6
2	00012168	Lock Washer, .312 x .583 x .083
3	00012609	Clevis Pin, ¼ x .750
4	00013669	Hex Flange Screw, #10-32 x .500
5	00014517	Hex Screw, M8-1.25 x 18
6	00014602	Machine Screw, #10-32 x .750
7	00014608	Nut, #10-32
8	00021517	Key, .250 x .250 x 2.00
9	00060056	Nut, #8-32
10	936-0171	Lock Washer, .490 x .776 x .114
11	710-3206A	Hex Screw, M8-1.25 x 25
12	710-3217	Machine Screw, #8-32 x .356
13	01000981	Hex Screw, M8-1.25 x 20
14	01001082	Hex Screw, 7⁄16-20 x 2.00
15	751B213146	Cable Throttle Clamp
16	914-0104	Hair Pin, ⅛ x 1.125 x .072
17	01003113	Hex Screw, ½-13 x 3.25
18	736-04131	Washer, .438 x 1.745 x .250
19	01005851	External Tooth Washer
20	01009616	Hex Screw, M10-1.5 x 20
21	01010119	Flange Top Lock Nut, ½-13
22	02001035	Engine Isolater

Ref.	Part Number	Description
23	02001098	Washer, .53 x 2.13 x .134
24	02001113P	Clutch
25	02001133P	Throttle Control Cable
26	02002158	Spacer, 1.14 x 1.75 x .438
27	02002402	Hex Screw, M8-1.25 x 30
28	02002425	Hose Clamp
29	680-00062	Engine Bracket
30	680-00109	Muffler Heat Shield
31	680-00122	Clutch Drive Shaft
32	703-07329	Clutch Retainer Bracket
33	703-07395	Diesel Fuel Seperator Mount Bracket
34	703-07396	Throttle Mount Bracket
35	710-0176	Hex Screw, 5⁄16-18 x 2.75
36	710-0376	Hex Screw, 5⁄16-18 x 1.00
37	710-05079	Hex Flange Screw, M12-1.75 x 25
38	710-1313	Hex Screw, M10-1.5 x 35
39	712-04063	Flange Lock Nut, 5⁄16-18
40	731-04914	Throttle Control Knob
41	751-11143	Elbow Exhaust Pipe
42	751-11265	Muffler Clamp
43	756-04402	Transmission Drive Pulley

Radiator Assembly

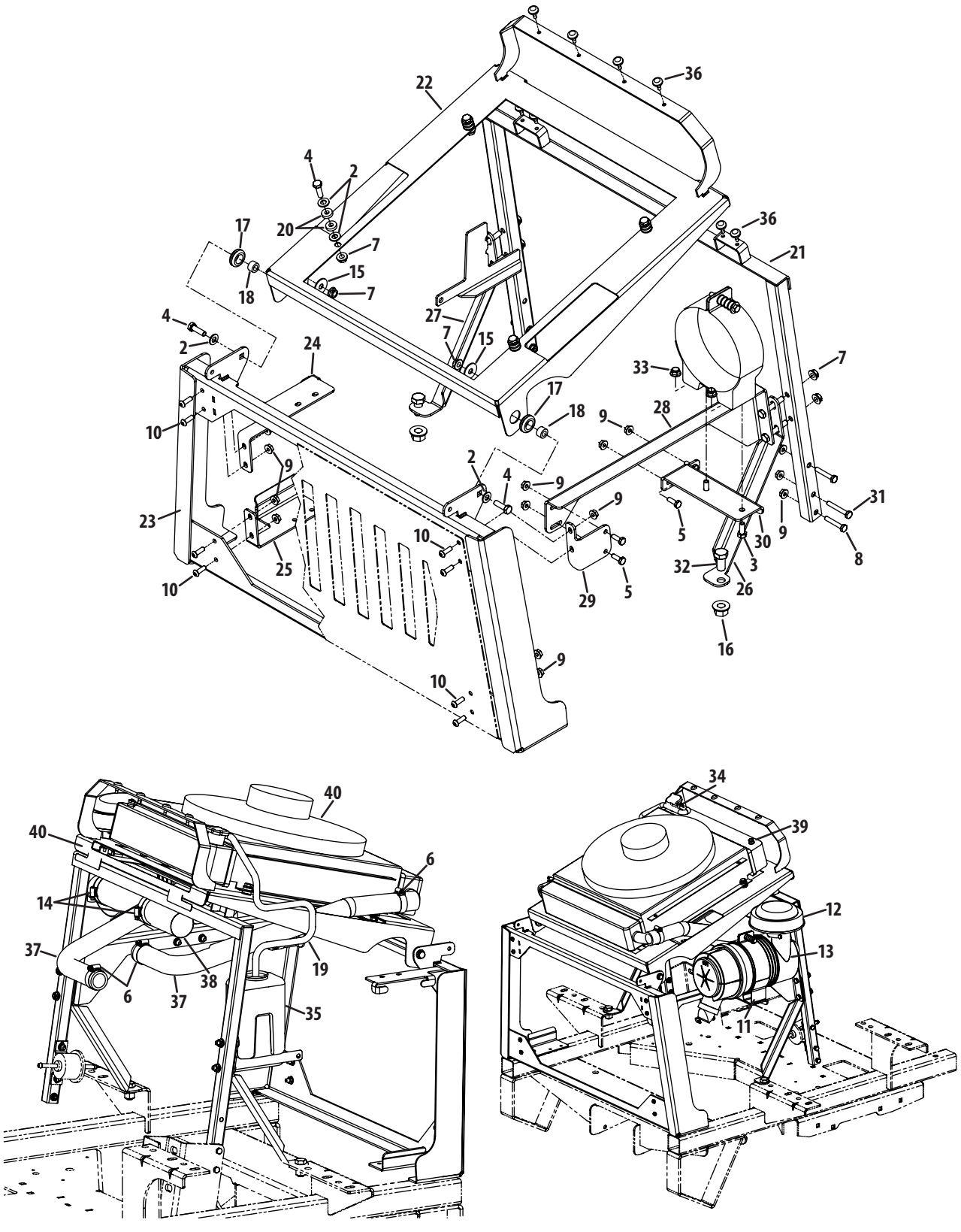

Ref.	Part Number	Description
1	00006129	Hex Screw, 5/16-18 x 1.75
2	00009812	Washer, .344 x .688 x .063
3	00012179	Hex Screw, 5/16-18 x .750
4	00012180	Hex Screw, 5/16-18 x 1.00
5	00013131	Hex Screw, 1/4-20 x .750
6	01000217	Hose Clamp
7	712-3004A	Flange Counter Lock Nut, 5/16-18
8	710-0606	Hex Screw, 1/4-20 x 1.50
9	912-3027	Flange Top Lock Nut, 1/4-20
10	01009362	Cap Screw, 1/4-20 x .750
11	01009874	Air Cleaner Mounting Band
12	01009878	Air Cleaner Inlet Hood
13	01009880	Air Cleaner Assembly
14	01009895	Hose Clamp
15	01009937	Washer, .313 x 1.06 x .062
16	01010119	Flange Top Lock Nut, 1/2-13
17	02001127	Grommet, .62 x 1.13 x 1/8
18	02001142	Spacer, .357 x .625 x .375
19	02002567	Radiator Hose, 1/4 x 27
20	02002577	Washer, .280 x .690 x .180
21	680-00080	Front Radiator Mount
22	680-00098	Radiator Mount Plate
23	680-00127	Hood Frame
24	703-07386	Hydro Cooler Upper Mount Bracket
25	703-07387	Hydro Cooler Lower Mount Bracket
26	703-07601	RH Radiator Support Bracket
27	703-07602	LH Radiator Support Bracket
28	703-07715	Air Cleaner Support Bracket
29	703-07716	Air Cleaner Support Bracket
30	703-07718	Air Cleaner Mount Bracket
31	710-0136	Hex Screw, 1/4-20 x 1.75
32	710-3131	Hex Screw, 1/2-13 x 1.00
33	712-04063	Flange Lock Nut, 5/16-18
34	726-0205	Hose Clamp, .490
35	731-04731	Coolant Over-Flow Container
36	935-0199A	Rubber Bumper, .62 x .22
37	735-04214	Radiator Hose
38	735-04219	Flexible Reinforced Hose
39	737-04156	Pipe Plug, 1/8-27
40	951-11364	Radiator Screen

60" Deck

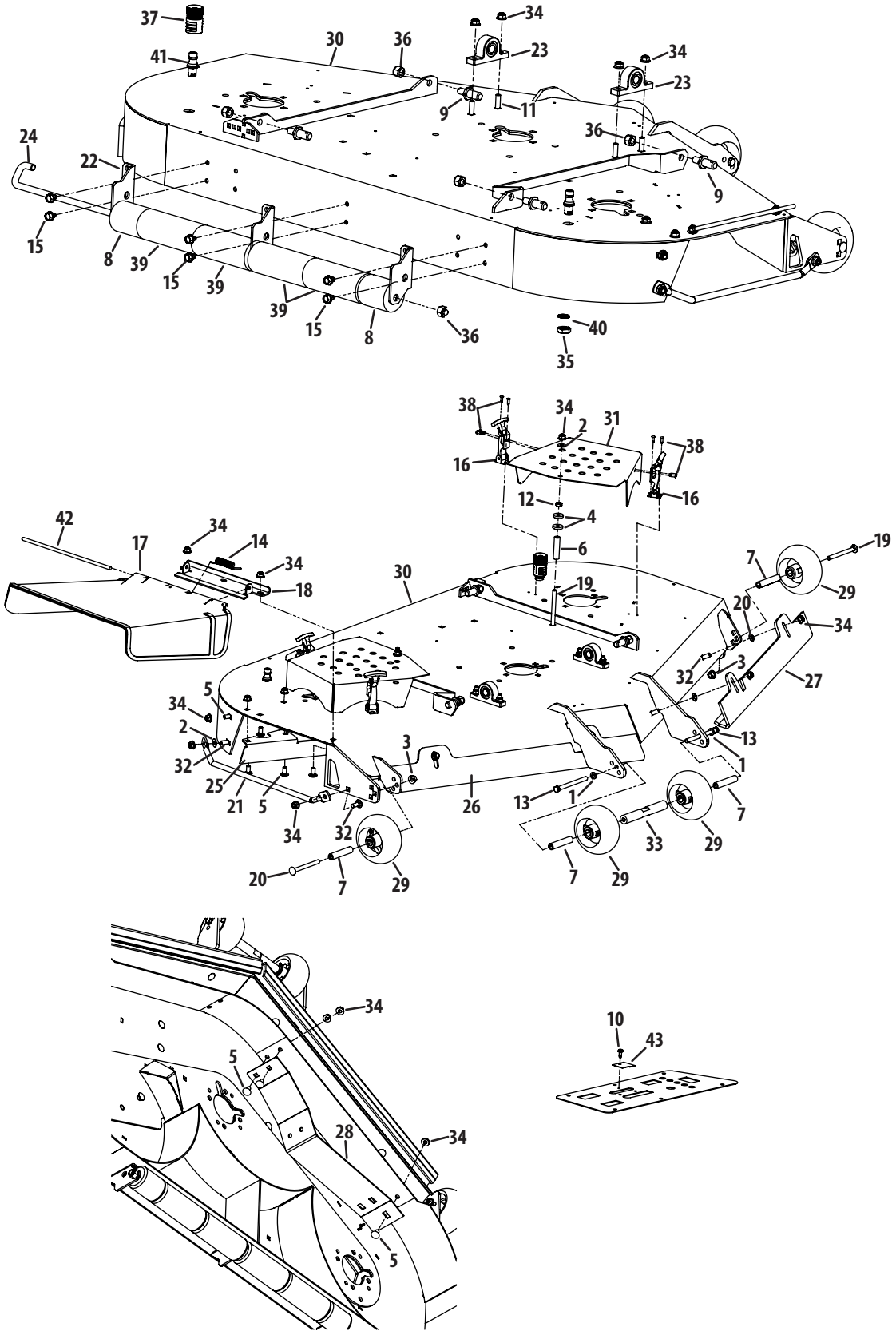
37
41
30
36
34
23
34
23
9
11
36
9
24
22
15
8
39
15
39
39
15
8
36
40
35
38
34
2
31
38
16
16
12
4
6
42
17
34
14
34
18
30
19
19
7
29
20
34
32
3
27
5
34
2
32
25
21
5
34
32
3
26
13
1
13
1
7
33
29
20
7
29
7
29
34
5
28
34
5
10
43

Ref.	Part Number	Description
1	936-0169	Lock Washer, .375 x .680 x .100
2	00012158	Washer, .406 x .813 x .063
3	00022560	Flange Counter Lock Nut, 3/8-16
4	00083192	Washer, .390 x 1.00 x .180
5	710-3178	Carriage Bolt, 3/8-16 x .75
6	01000395	Spacer, .400 x .560 x 2.45
7	750-3193	Spacer, .390 x .620 x 3.04
8	01001169	Grass Catcher Frame Roller
9	01001745	Pin, 5/8 x 1.20
10	01001864	Flange Screw, #10-24 x .500
11	710-3034	Carriage Bolt, 3/8-16 x 1.25
12	01002511	Jam Nut, 3/8-16
13	710-0944	Hex Screw, 3/8-16 x 4.50
14	01003253	Torsion Spring
15	01004304	Flange Screw, 3/8-16 x .500
16	01005869P	T-Handle Draw Latch
17	01006693	Chute Deflector
18	01006748	Chute Deflector Bracket
19	01008049	Carriage Bolt, 3/8-16 x 4.00
20	01008225	Push Nut, .335 x .780 x .015
21	01008644	Finger Guard
22	01008790	Right Roller Mount Bracket
23	02000109	Steel Pillow Bearing
24	02002800	J-Hook
25	02005195	Chute Baffle
26	02005200	RH Front Adjustable Skirt
27	02005201	LH Front Adjustable Skirt
28	02005694	Adjustable Baffle
29	634-3159	Wheel
30	680-00117	Deck Assembly
31	703-06871	Belt Cover
32	710-3168	Carriage Bolt, 3/8-16 x 1.00
33	711-05159	Ball Wheel Frount Mount Shaft
34	712-04065	Flange Lock Nut, 3/8-16
35	912-0641	Hex Nut, M16-1.5
36	712-3083	Hex Lock Nut, 1/2-13
37	921-04041	Water Nozzle Adapter
38	728-04033	Rivet, 3/16
39	731-3005	Front roller
40	936-0760	Lock Washer, 17 x 23.8 x 1.95
41	737-04003D	Water Deck Nozzle
42	747-3384	Chute Deflector Rod
43	783-06677	Throttle Control Bracket

72" Deck

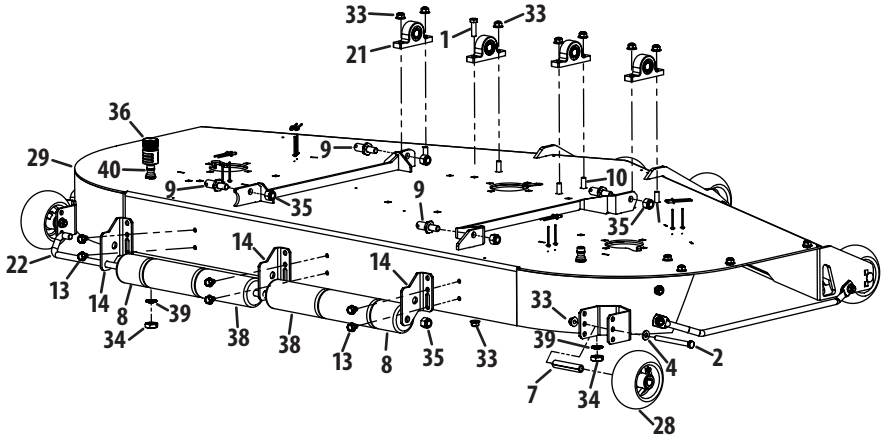
33
21
1
33
36
29
40
9
9
9
10
35
35
22
14
14
13
14
8
39
34
38
38
13
8
35
33
33
39
4
2
7
34
28

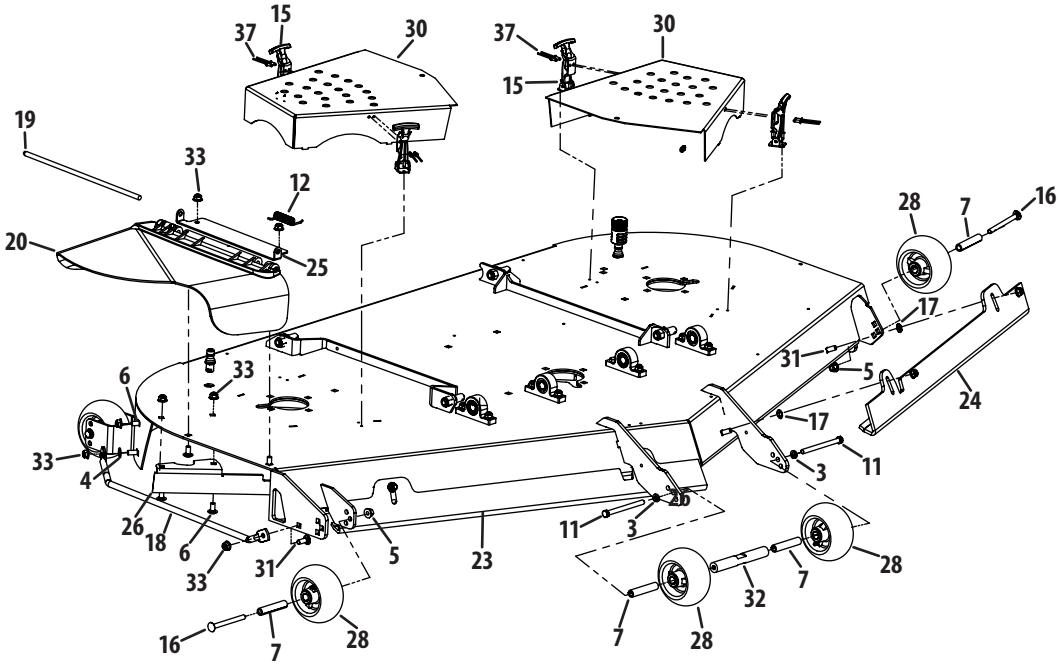
37
15
30
37
30
15
19
33
12
20
25
28
7
16
17
31
5
24
6
33
17
33
4
3
11
26
18
6
33
31
5
23
11
3
28
7
32
7
28
16
7
28

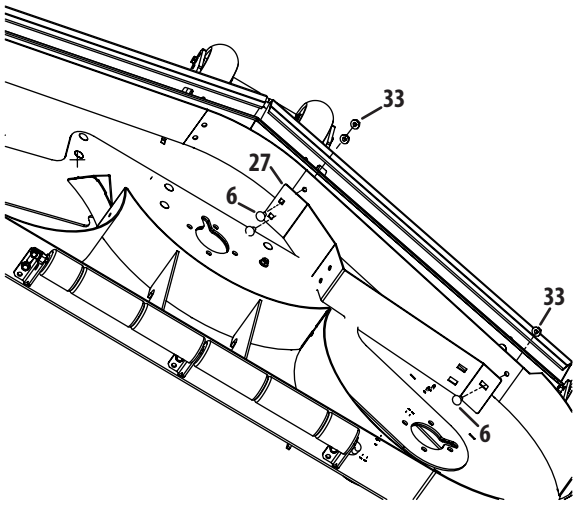
33
27
6
33
6

Ref.	Part Number	Description
1	00011444	Hex Cap Screw, ⅜-16, 1.25
2	00011925	Hex Cap Screw, ⅜-16, 4.00
3	936-0169	Lock Washer, .375 x .680 x .100
4	00012158	Flat Washer, ⅜
5	00022560	Flange Lock Hex Nut, ⅜-16
6	710-3178	Carriage Bolt, ⅜-16 x .75
7	750-3193	Wheel Spacer, .390 x .620 x 3.04
8	01001169	Grass Catcher Roller
9	01001745	Pin, ⅝ Dia. x 1.2
10	710-3034	Carriage Screw, ⅜-16 x 1.25
11	710-0944	Hex Cap Screw, ⅜-16 x 4.50
12	01003253	Torsion Spring, 0.4 x 2.16
13	01004304	Hex Washer Screw, ⅜-16, .5
14	01004707	Deck Roller Mount Bracket
15	01005869P	T-Handle Latch Draw
16	01008049	Carriage Bolt, ⅜-16 x 4.00
17	01008225	Push Retainer
18	01008526	Finger Guard
19	01009102	Pin, .375 x 14.06
20	01009705P	Chute Deflector
21	02000109	Pillow Block, Steel
22	02002800	J-Hook w/ Threaded Roller
23	02004868	Right Hand Front Adjustment Skirt
24	02004869	Left Hand Front Adjustment Skirt
25	02004874	Chute Deflector Bracket
26	02005195	Chute Baffle
27	02005696	Baffle, 72" Adjustment
28	634-3159	Complete Wheel, 5.00 Dia.
29	680-00112	72" Deck Assembly
30	703-07635	Deck Belt Cover
31	710-3168	Carriage Bolt, ⅜-16 x 1
32	711-05159	Ball Wheel Mounting Shaft
33	712-04065	Flange Lock Hex Nut, ⅜-16
34	912-0641	Hex Nut, M16-1.5
35	712-3083	Lock Nut, Nylon Insert, ½-13
36	921-04041	Water Nozzle Adaptor
37	728-04033	Pop Rivet, 3⁄16
38	731-3005	Front Roller
39	936-0760	Lock Washer, 17 x 23.8 x 1.95
40	737-04003D	Deck Water Nozzle

60″ Spindle Assembly

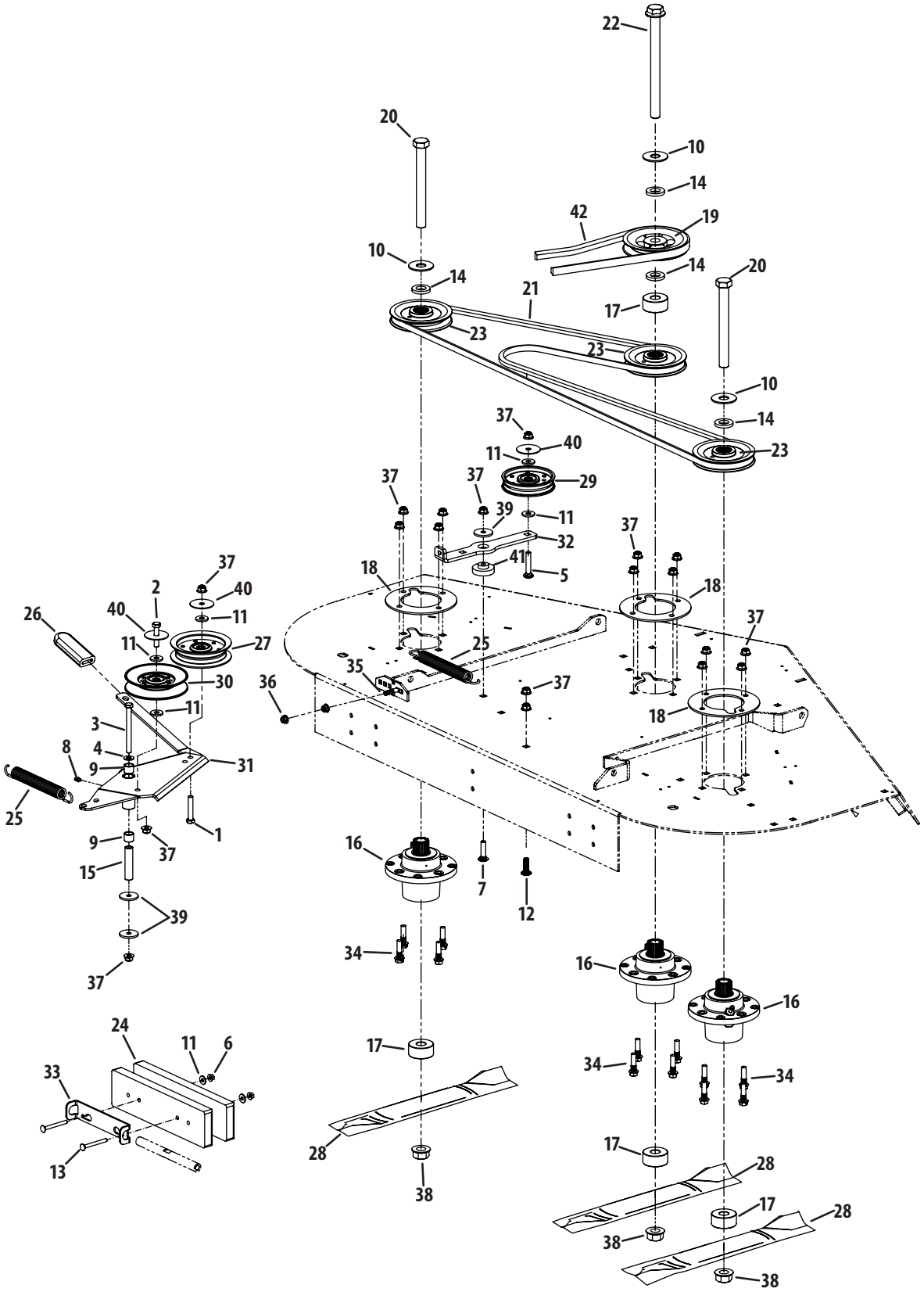

Ref.	Part Number	Description
1	00002528	Hex Screw, 3/8-16 x 2.00
2	00008495	Hex Screw, 3/8-16 x 1.75
3	00011925	Hex Screw, 3/8-16 x 4.00
4	00012158	Washer, .406 x .813 x .063
5	00014270	Carriage Bolt, 3/8-16 x 2.00
6	00022560	Flange Counter Lock Nut, 3/8-16
7	00030276	Carriage Bolt, 3/8-16 x 1.50
8	00060078	Grease Fitting, 1/4-28
9	01000308	Sleeve Bearing, .628 x .753 x .625
10	736-3014	Washer, .781 x 2.00 x .105
11	736-3052	Washer, .406 x 1.00 x .105
12	710-3034	Carriage Bolt, 3/8-16 x 1.25
13	710-0521	Carriage Bolt, 3/8-16 x 3.50
14	01003123	Spacer, .812 x 1.47 x .218
15	01003245	Spacer, .390 x .635 x 2.75
16	01003532AP	Spindle Assembly
17	01004415	Spacer, .760 x 2.00 x .925
18	01004478	Support Plate
19	01005201	Pulley
20	01005213	Hex Screw, 3/4-16 x 7.00
21	01005376	V-Belt
22	01005388	Hex Screw, 3/4-16 x 9.00
23	01005616	Pulley
24	02002426	Weight Bar, 25 lbs.
25	02003712	Extension Spring, .94 x 7.57 x .14
26	02003740	Flat Grip, 1.0 x 3.2 x .25
27	02004447	Idler Pulley
28	02005019	Hi-Lift Blade, 21.0
29	02005077	Idler Pulley
30	02005079	Idler Pulley
31	02005509	Double Idler Handle
32	703-07010	Deck Idler Arm
33	703-07740	Weight Bar Bracket
34	710-0262	Carriage Bolt, 5/16-18 x 1.50
35	710-04829	Hex Flange Bolt, 3/8-16 x 1.5
36	712-04063	Flange Lock Nut, 5/16-18
37	712-04065	Flange Lock Nut, 3/8-16
38	712-3078	Flange Lock Nut, 3/4-16
39	936-0227	Flat Washer, .390 x 1.500 x .134
40	736-3040	Flat Washer, .406 x 1.92 x .060
41	738-04376	Shoulder Spacer, .854 x .280
42	954-04256	PTO Belt

72" Spindle Assembly

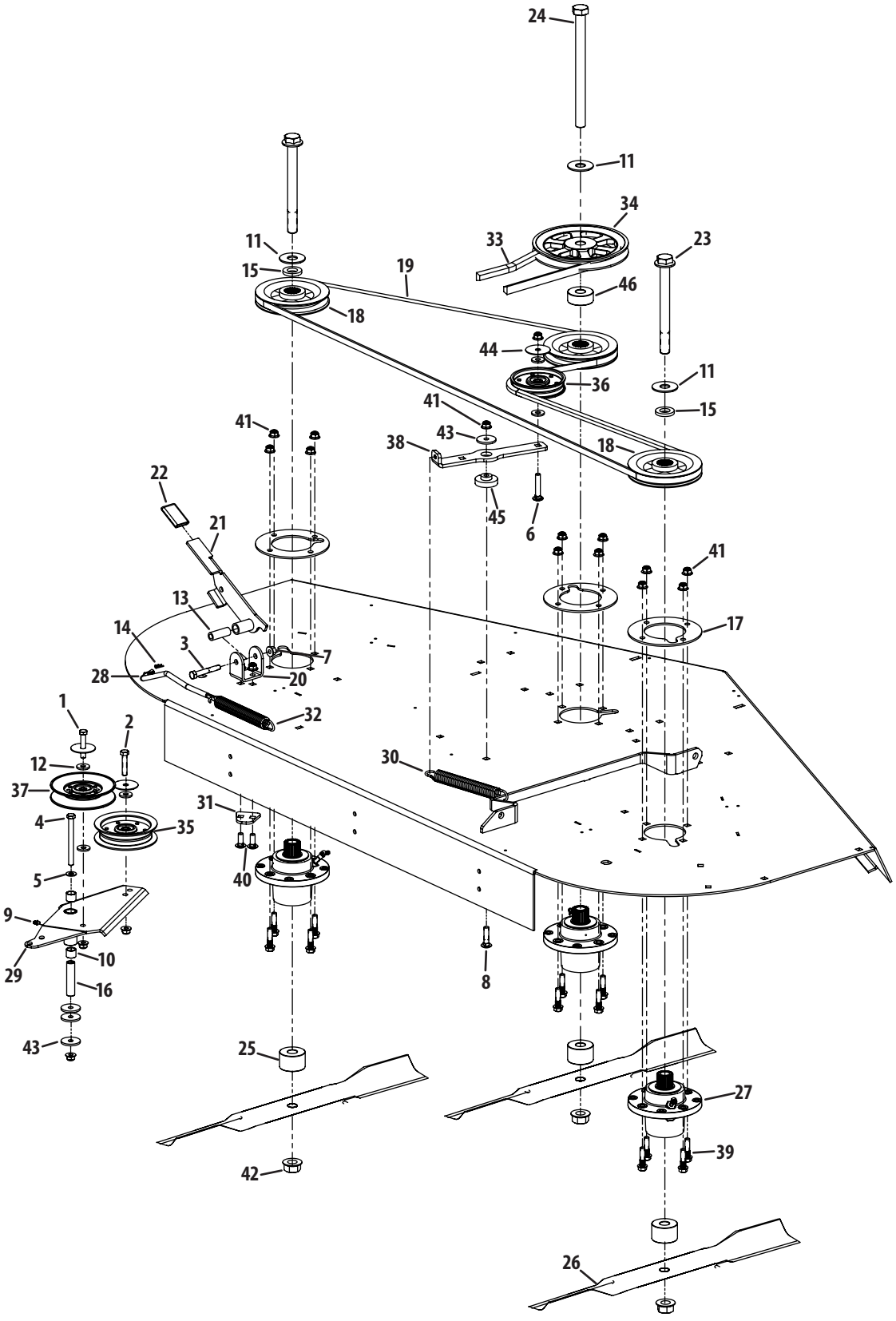

Ref.	Part Number	Description
1	00002528	Hex Screw, ⅜-16 x 2.00
2	00008495	Hex Screw, ⅜-16 x 1.75
3	00011861	Hex Screw, ⅜-16 x 2.50
4	00011925	Hex Screw, ⅜-16 x 4.00
5	00012158	Washer, .406 x .813 x .063
6	00014270	Carriage Bolt, ⅜-16 x 2.00
7	00022560	Flange Counter Lock Nut, ⅜-16
8	00030276	Carriage Bolt. ⅜-16 x 1.50
9	00060078	Grease Fitting, ¼-28
10	01000308	Sleeve Bearing, .628 x.753 x.625
11	736-3014	Washer, .781 x 2.00 x .105
12	736-3052	Washer, .406 x 1.00 x .105
13	01002751	Spacer, .390 x .630 x 1.75
14	01002771	Internal Cotter Pin, .072 x 1.12
15	01003123	Spacer, .812 x 1.47 x .218
16	01003245	Spacer, .390 x .635 x 2.75
17	01004478	Spindle Support Plate
18	01007499	Pulley
19	01007937	V-Belt
20	01008222	Idler Tension Bracket
21	01008247	Tension Handle Weldment
22	01008270	Idler Tension Handle Grip
23	01008542	Hex Screw, ¾-16 x 7.50

Ref.	Part Number	Description
24	01008543	Hex Screw, ¾-16 x 9.50
25	02000454	Spacer, .760 x 2.00 x 1.28
26	02000568	Blade, 25"
27	02000920P	Spindle Assembly
28	723-04712	Idler Control Knob
29	02003759	Idler Double Weldment
30	02003712	Extension Spring, .94 x 7.57 x .14
31	02004063	Idler Spring Bracket Adapter Plate
32	02004069	Extension Spring, .94 x 7.74 x .14
33	754-04255	V-Belt
34	02005097	Pulley
35	02004447	Idler Pulley
36	02005077	Idler Pulley
37	02005079	Idler Pulley
38	703-07010	Deck Idler Arm
39	710-04829	Flange Bolt, ⅜-16 x 1.5
40	710-3168	Carriage Bolt, ⅜-16 x 1.00
41	712-04065	Flange Lock Nut, ⅜-16
42	712-3078	Flange Lock Nut, ¾-16
43	936-0227	Flat Washer, .390 x 1.500 x .134
44	736-3040	Flat Washer, .406 x 1.92 x .060
45	738-04376	Shoulder Spacer, .854 x .280
46	01004415	Spacer, .760 x 2.00 x .925

Yanmar 3TNV82A-BDCB Cylinder Block

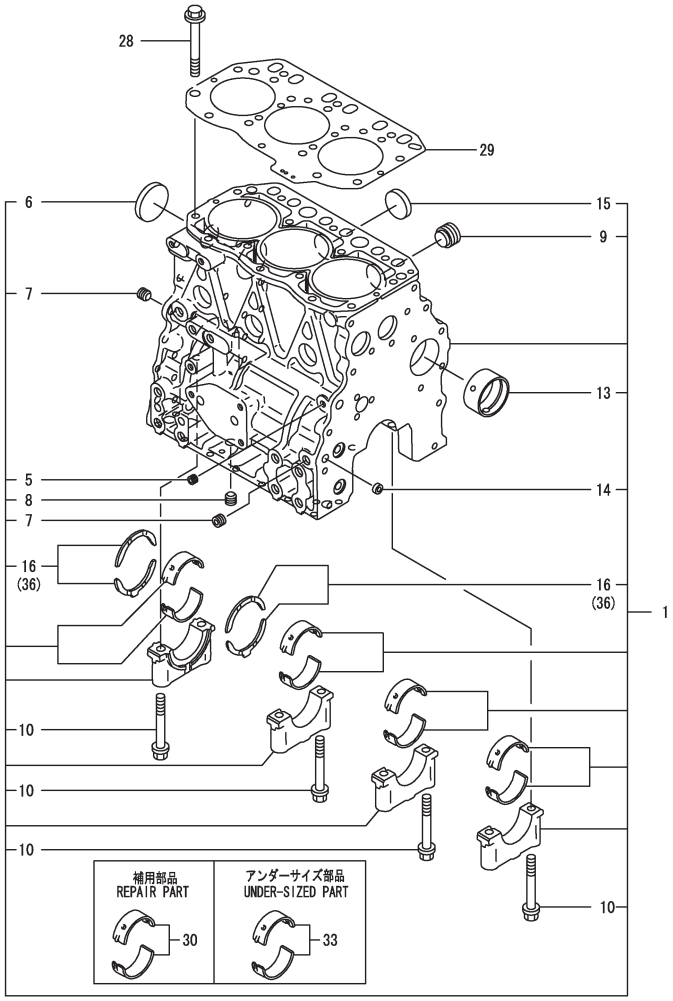

Ref.	Part Number	Description
1	YA-719802-01560	Cylinder Block Assembly
5	YA-124060-01050	Plug, ⅛
6	YA-129001-01250	Plug, 50
7	YA-124160-01910	Plug, ¼
8	YA-124160-01910	Plug, ¼
9	YA-171051-01921	Plug
10	YA-119620-02020	Metal Cap Bolt
13	YA-129795-02412	Camshaft Bushing
14	YA-27241-120000	Plug, 12
15	YA-27243-300000	Plug, 30
16	YA-119717-02930	Thrust Bearing
28	YA-119810-01200	Cylinder Head Bolt
29	YA-119812-01330	Head Gasket
30	YA-719810-02981	Main Bearing Assembly
33	YA-119810-02871	Main Bearing, .25
36	YA-119810-02941	Thrust Bearing, .25

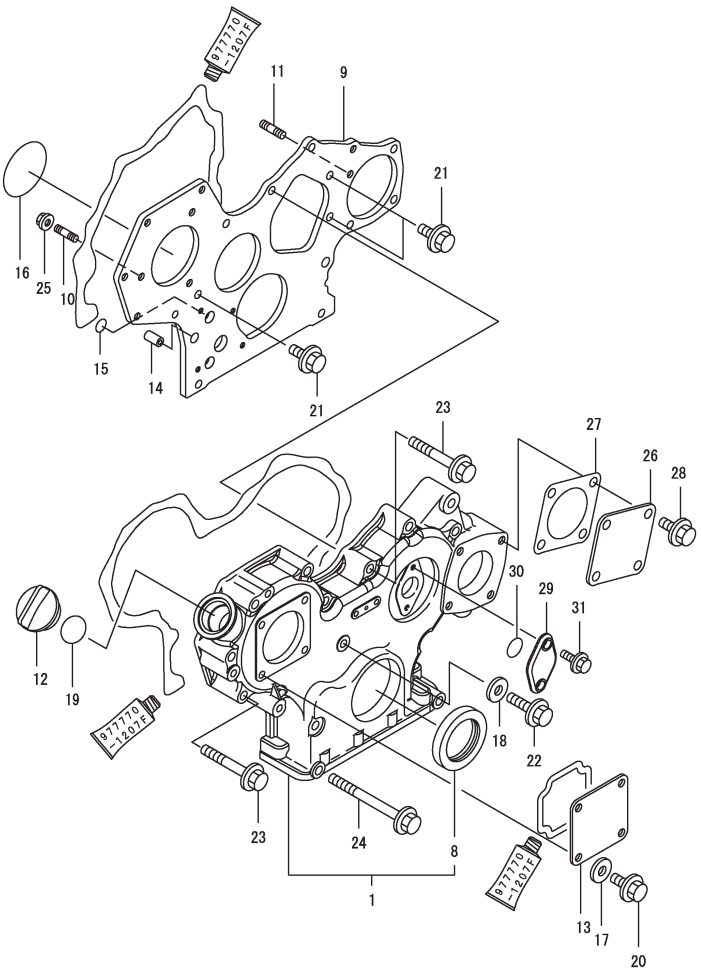

Ref.	Part Number	Description
1	YA-729008-01500	Gear Housing Assembly
8	YA-119934-01800	Oil Seal
9	YA-129008-01520	Gear Case Flange
10	YA-119802-01561	Stud, M8 x 25
11	YA-129150-01580	Stud, 8 x 30
12	YA-124160-01751	Filler Cover
13	YA-124240-01871	Pump Cover
14	YA-129795-01950	Knock Pipe
15	YA-119609-32040-1	O-Ring, P16
16	YA-121850-51960	O-Ring, F.I. Pump
17	YA-22190-080002	Seal Washer, 8S
18	YA-22190-080002	Seal Washer, 8S
19	YA-24311-000320	O-Ring, 1A P-32.0

Ref.	Part Number	Description
20	YA-26106-080162	Bolt, M8 x 16
21	YA-26106-080162	Bolt, M8 x 16
22	YA-26106-080302	Bolt, M8 x 30
23	YA-26106-080552	Bolt, M8 x 55
24	YA-26106-080852	Bolt, M8 x 85
25	YA-26306-080002	Nut, M8
26	YA-124240-01871	Pump Cover
27	YA-124240-01883	Pump Gasket
28	YA-26106-080162	Bolt, M8 x 16
29	YA-121023-01551	Tachometer Cover
30	YA-24341-000240	O-Ring, 1A S-24.0
31	YA-26106-060162	Bolt, M6 x 16

Yanmar 3TNV82A-BDCB Flywheel Housing & Oil Sump

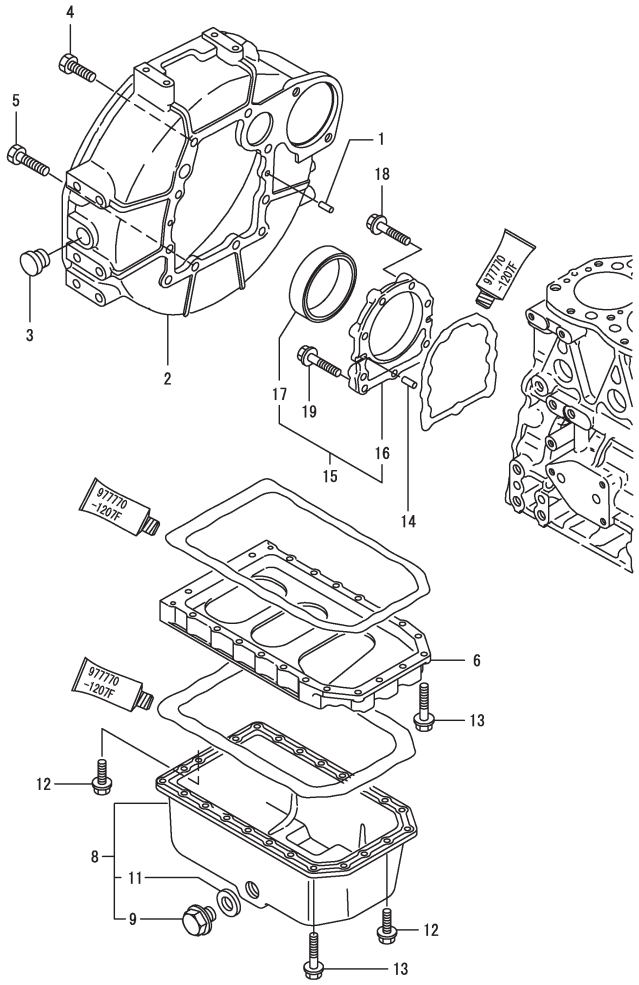

Ref.	Part Number	Description
1	YA-129100-01580	Parallel Pin, M8 x 16
2	YA-129612-01600	Flywheel Housing
3	YA-119620-01750	Flywheel Cover Cap
4	YA-26206-100252	Bolt, M10 x 25
5	YA-26206-100302	Bolt, M10 x 30
6	YA-119810-01730	Oil Sump Spacer
8	YA-119810-01770	Oil Sump Assembly
9	YA-119640-01640	Drain Plug, M22
11	YA-22190-220002	Washer, 22
12	YA-26106-080162	Bolt, M8 x 16
13	YA-26106-080452	Bolt, M8 x 45
14	YA-129100-01580	Parallel Pin, M8 x 16
15	YA-129100-01640	Oil Seal Case Assembly
16	YA-129150-01650	Oil Seal Case
17	YA-129120-01780	Oil Seal
18	YA-129486-01670	Bolt, M8 x 30
19	YA-26106-080352	Bolt, M8 x 35

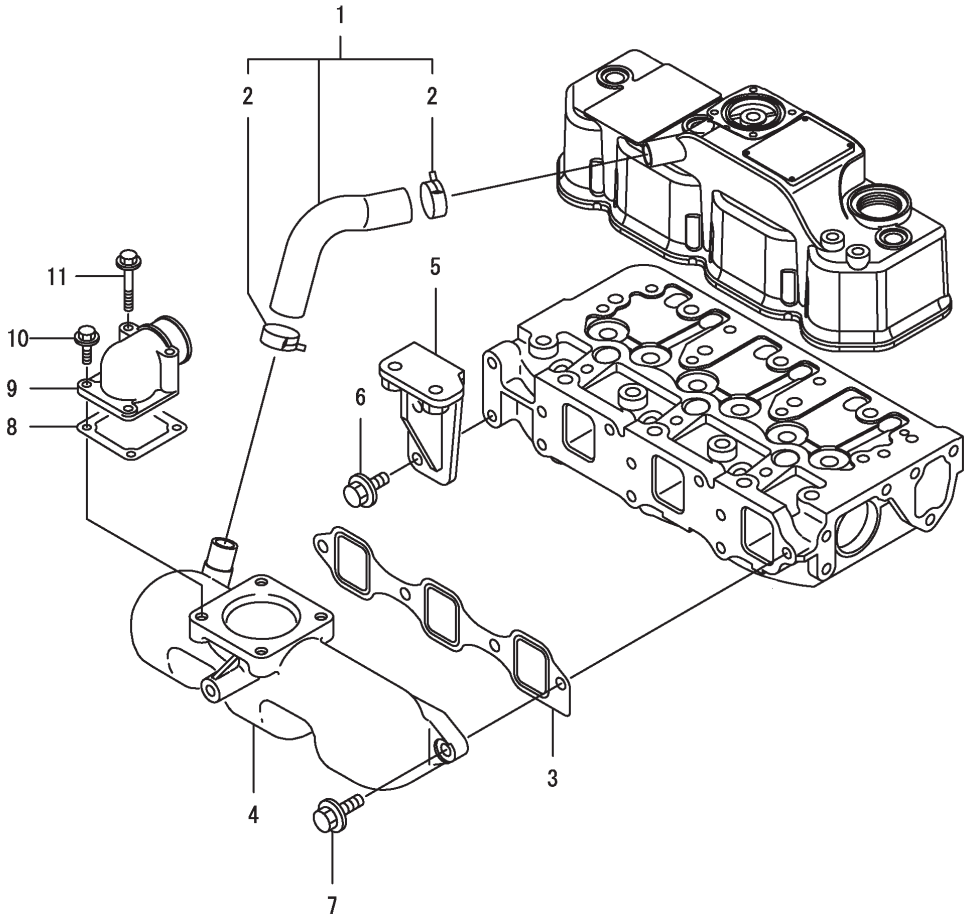

Ref.	Part Number	Description
1	YA-119802-03090	Breather Pipe
2	YA-129410-03990	Clamp, 22
3	YA-119810-12112	Manifold Gasket
4	YA-119803-12140	Intake Manifold
5	YA-119802-55620	Filter Bracket
6	YA-26106-080162	Bolt, M8 x 16
7	YA-26106-080252	Bolt, M8 x 25
8	YA-129150-77511	Air Heater Gasket
9	YA-171340-77520	Bend
10	YA-26106-080252	Bolt, M8 x 25
11	YA-26106-080652	Bolt, M8 x 65

Yanmar 3TNV82A-BDCB Cylinder Head & Bonnet

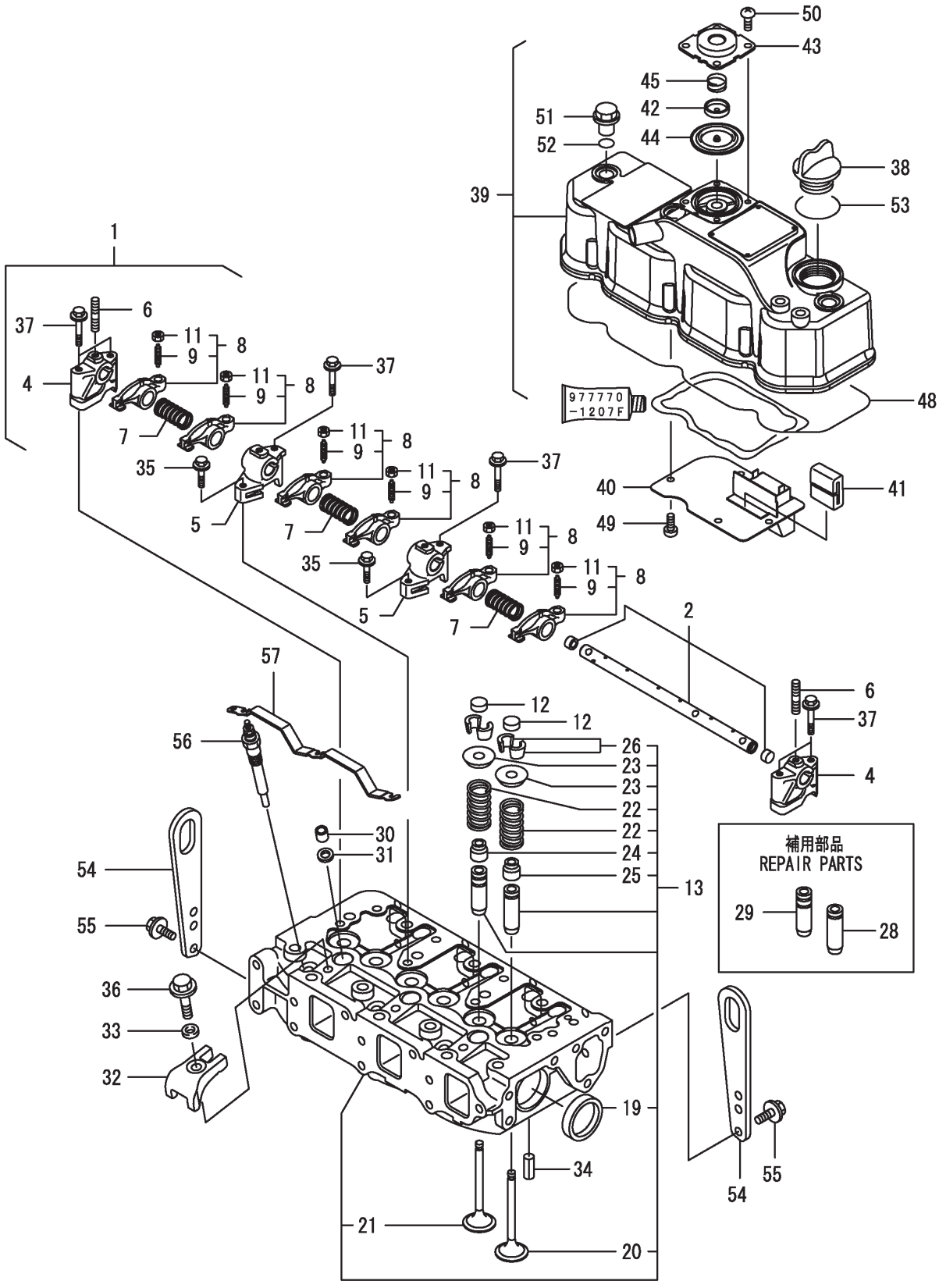

Ref.	Part Number	Description
1	YA-119802-11241	Rocker Shaft Assembly
2	YA-119802-11251	Rocker Arm Shaft
4	YA-119802-11260	Arm Support A
5	YA-119802-11270	Arm Support B
6	YA-26226-080182	Stud
7	YA-129150-11280	Shaft Spring
8	YA-119802-11650	Rocker Arm Assembly
9	YA-129150-11230	Valve Adjust Screw
11	YA-129150-11750	Nut, M8
12	YA-104211-11370	Valve Cap
13	YA-119803-11700	Cylinder Head Assembly
19	YA-27241-400000	Plug, 40
20	YA-119802-11100	Intake Valve
21	YA-119802-11110	Exhaust Valve
22	YA-119810-11120	Valve Spring
23	YA-104211-11180	Spring Retainer
24	YA-119803-11340	Valve Stem Seal
25	YA-124160-11340	Valve Stem Seal
26	YA-27310-070001	Cotter, 7
28	YA-124060-11800	Intake Valve Guide
29	YA-119802-11810	Exhaust Valve Guide
30	YA-119802-11870	Nozzle Protector
31	YA-119625-11880	Nozzle Seat
32	YA-119802-11900	Nozzle Retainer

Ref.	Part Number	Description
33	YA-120270-54410	Injector Washer
34	YA-22351-060012	Spring Pin, 6 x 12
35	YA-26106-080252	Bolt, M8 x 25
36	YA-26106-080452	Bolt, M8 x 45
37	YA-26106-080502	Bolt, M8 x 50
38	YA-124160-01751	Filler Cover
39	YA-119802-11350	Head Bonnet Assembly
40	YA-119802-03010	Baffle Plate
41	YA-129150-03070	Breather Baffle
42	YA-119802-03110	Center Plate
43	YA-119802-03121	Diaphragm Cover
44	YA-119802-03130	Diaphragm
45	YA-119802-03141	Diaphragm Spring
48	YA-119802-11310	Bonnet Gasket
49	YA-22857-500100	Screw, M5 x 10
50	YA-22857-500100	Screw, M5 x 10
51	YA-124160-11360	Knob
52	YA-24311-000120	O-Ring, 1A P-12.0
53	YA-24311-000320	O-Ring, 1A P-32.0
54	YA-129900-07900	Engine Lifter
55	YA-26106-080162	Bolt, M8 x 16
56	YA-129008-77800	Glow Plug
57	YA-119803-77821	Glow Plug Connector

Yanmar 3TNV82A-BDCB Exhaust Manifold

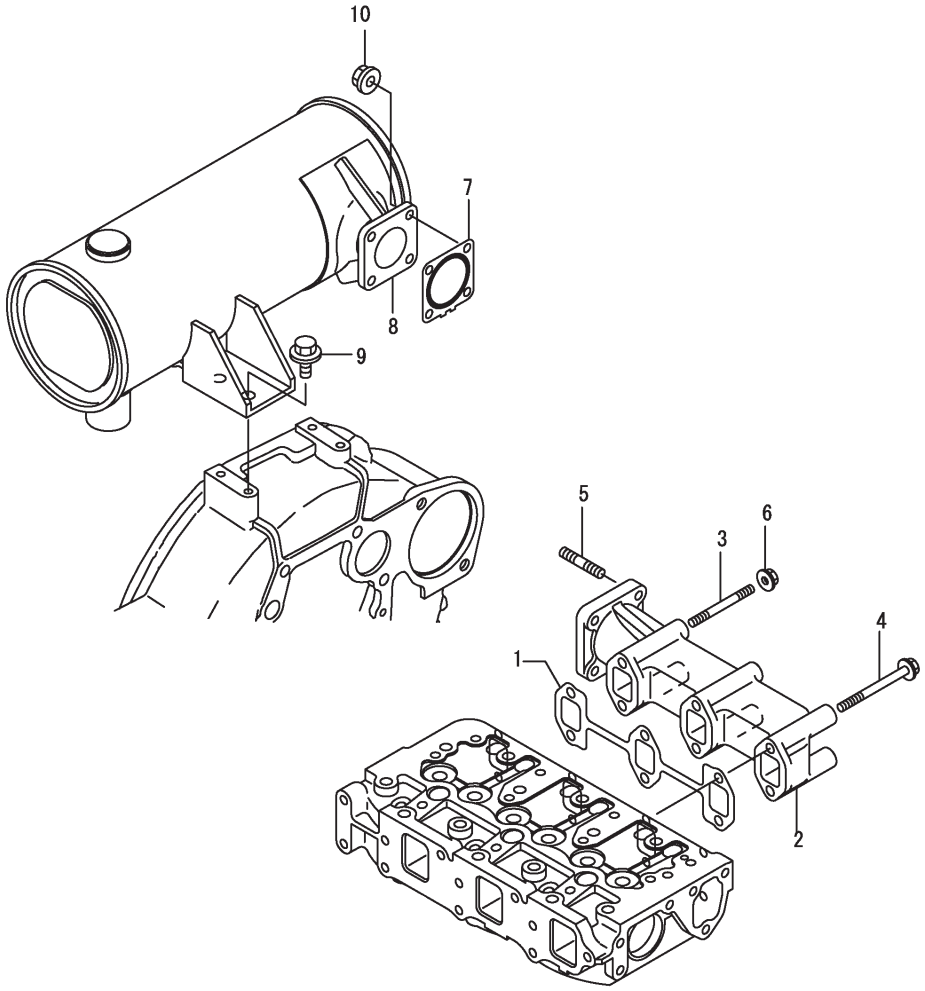

Ref.	Part Number	Description
1	YA-119810-13110	Exhaust Manifold Gasket
2	YA-119802-13129	Exhaust Manifold
3	YA-123900-13610	Stud, M8 x 80
4	YA-123900-13630	Bolt, M8 x 80
5	YA-119131-18320	Stud, M8 x 22
6	YA-26306-080002	Nut, M8
7	YA-129004-13200	Silencer Gasket
8	YA-129240-13500	Silencer
9	YA-26106-100202	Bolt, M10 x 20
10	YA-26306-080002	Nut, M8

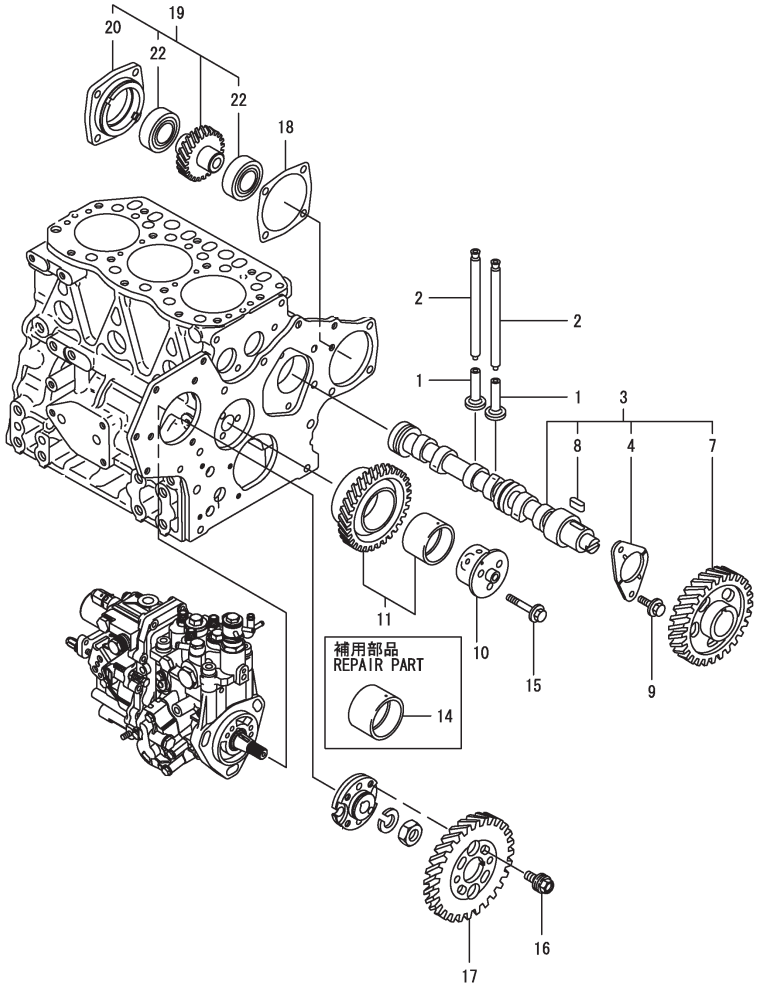

Ref.	Part Number	Description
1	YA-129150-14200	Tappet
2	YA-119810-14400	Push Rod
3	YA-119802-14580	Camshaft Assembly
4	YA-129150-02450	Thrust Metal
7	YA-129150-14101	Camshaft Gear
8	YA-22512-070140	Key, 7 x 14
9	YA-26106-080142	Bolt, 8 x 14
10	YA-119803-25050	Idler Shaft
11	YA-119802-25101	Idle Gear Assembly
14	YA-119802-25071	Idle Gear Bushing
15	YA-26106-080402	Bolt, M8 x 40
16	YA-129150-25301	Pump Bolt
17	YA-119802-25901	Pump gear
18	YA-129150-01881	Gasket
19	YA-129150-26000	Pump Drive Assembly
20	YA-129150-26050	Pump Bracket
22	YA-24105-060064	Ball Bearing

Yanmar 3TNV82A-BDCB Hydraulic Pump

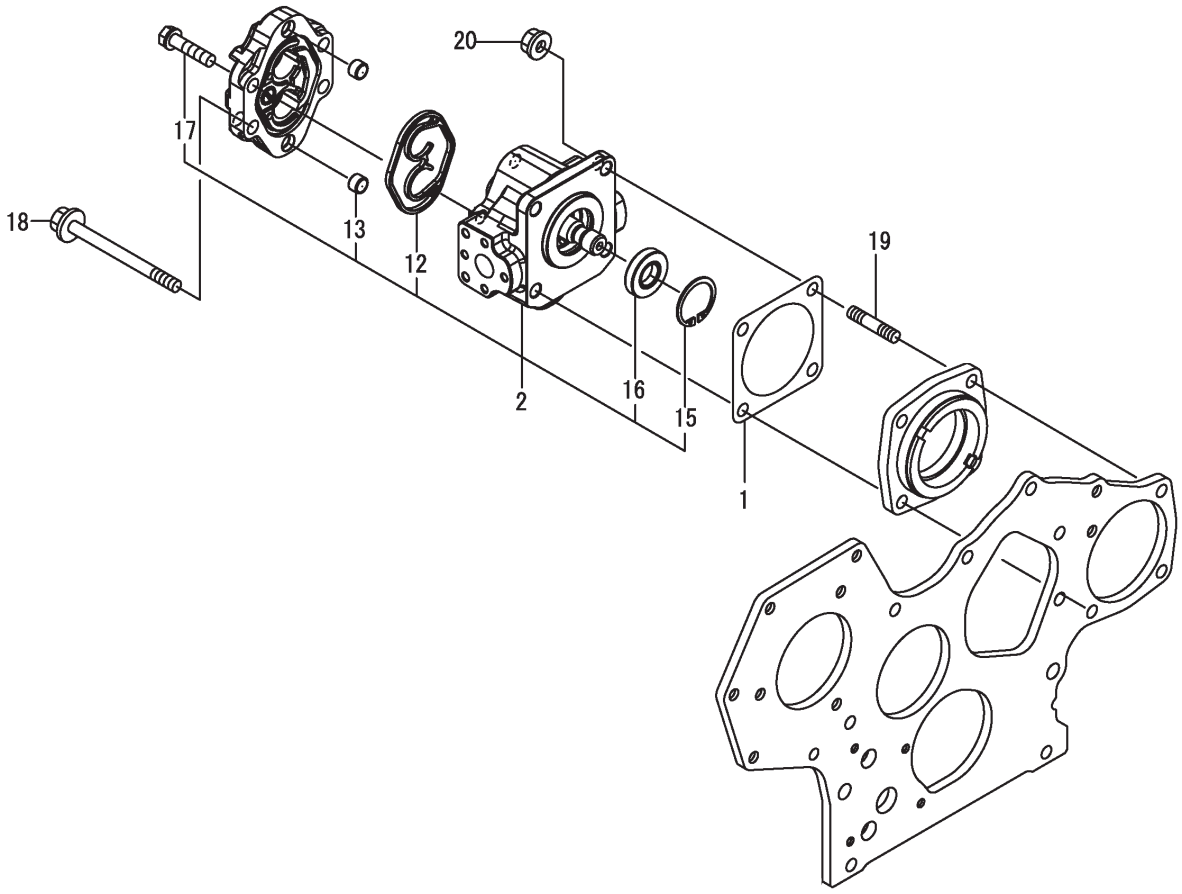

Ref.	Part Number	Description
1	YA-124240-01883	Pump Gasket
2	YA-119462-26020	Hydraulic Oil Pump
12	YA-178070-10401	Square Ring
13	YA-194521-41570	Pin, 11 x 7
15	YA-22252-000320	Circlip, 32
16	YA-24421-153207	Oil Seal, TC15 32 07
17	YA-26016-080352	Bolt, M8 x 35
18	YA-26106-080952	Bolt, M8 x 95
19	YA-26216-080402	Stud, M8 x 40
20	YA-26306-080002	Nut, M8

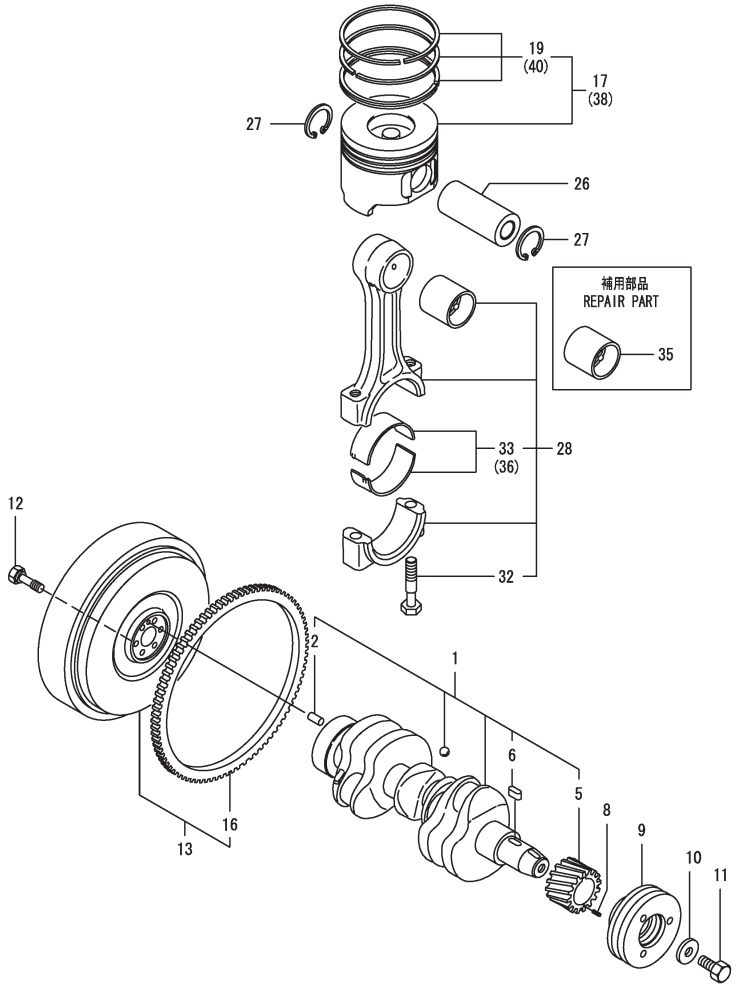

Ref.	Part Number	Description
1	YA-119803-21000	Crankshaft Assembly
2	YA-129100-01580	Parallel Pin, M8 x 16
5	YA-119803-21200	Crankshaft Gear
6	YA-22512-070140	Key, 7 x 14
8	YA-22351-030010	Spring Pin, 3 x 10
9	YA-119802-21650	Crankshaft V-Pulley
10	YA-129795-21661	Washer
11	YA-121850-21680	V-Pulley Bolt
12	YA-121111-21501	Flywheel Bolt
13	YA-171420-21580	Flywheel Assembly
16	YA-119865-21600	Ring Gear

Ref.	Part Number	Description
17	YA-119803-22080	Piston w/ Ring
19	YA-119802-22500	Piston Ring Set
26	YA-119813-22300	Piston Pin
27	YA-129792-22400	Circlip, 23
28	YA-719810-23100	Connecting Rod Assembly
32	YA-119810-23200	Connecting Rod Bolt
33	YA-119810-23601	Crank Pin Metal Assembly
35	YA-119810-23910	Piston Pin Bushing
36	YA-119810-23611	Pin Bearing, 0.25
38	YA-719803-22900	Piston w/ Ring, .25OS
40	YA-119802-22950	Piston Ring Set, .25

Yanmar 3TNV82A-BDCB Lubrication Oil System

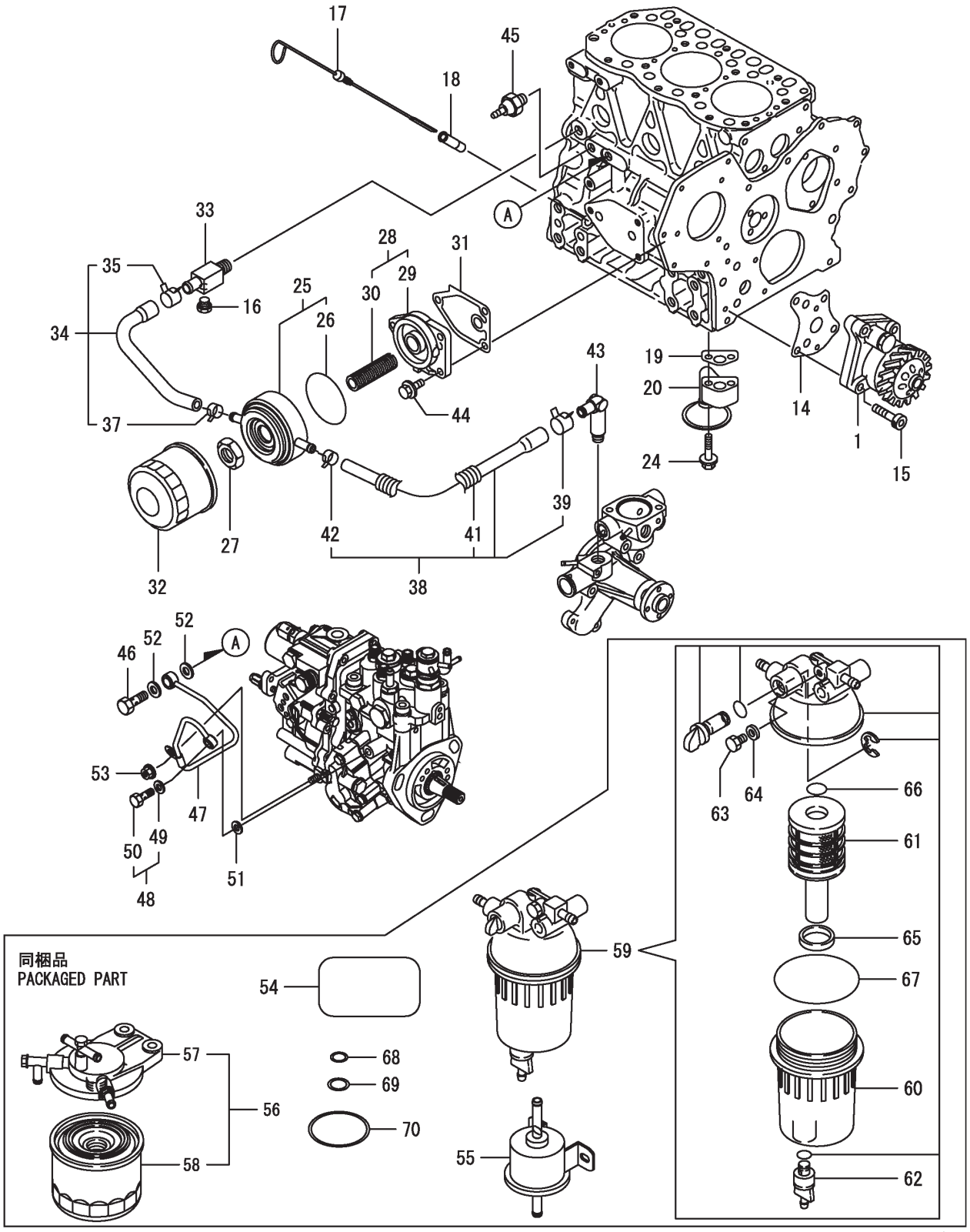

Ref.	Part Number	Description
1	YA-129001-32001	Lubrication Oil Pump Assembly
14	YA-129150-32020	Pump Gasket
15	YA-26450-060252	Bolt, M6 x 25
16	YA-171056-49120	Drain Plug
17	YA-119802-34802	Lubrication Oil Dipstick
18	YA-121520-34810	Dipstick Guide
19	YA-129150-35042	Pipe Gasket
20	YA-119810-35300	Oil Inlet Pipe Assembly
24	YA-26106-080352	Bolt, M8 x 35
25	YA-129508-33010	Lubrication Oil Cooler Assembly
26	YA-129508-33050	O-Ring
27	YA-129417-33110	Oil Cooler Nut
28	YA-129006-35100	Filter Bracket Assembly
29	YA-119802-35110	Filter Bracket
30	YA-129417-35150	Stud, L = 67
31	YA-129150-35111	Gasket
32	YA-129150-35153	Filter, 80 x 80L
33	YA-129006-44480	Joint
34	YA-129508-49030	Cooler Inlet Pipe
35	YA-171008-03990	Hose Clip
37	YA-23080-015000	Clamp
38	YA-129508-49040	Cooler Outlet Pipe
39	YA-171008-03990	Hose Clip
41	YA-119940-59130	Corrugated Tube
42	YA-23080-015000	Clamp
43	YA-119944-49300	Elbow, PT ⅜
44	YA-26106-080202	Bolt, M8 x 20

Ref.	Part Number	Description
45	YA-114250-39450	Oil Pressure Switch
46	YA-124160-39140	Joint Bolt, M10
47	YA-119802-39450	Lubrication Oil Pipe Assembly
48	YA-129005-59830	Joint Bolt Assembly
49	YA-22190-080002	Seal Washer, 8S
50	YA-23857-030000	Joint Bolt, 3
51	YA-22190-080002	Seal Washer, 8S
52	YA-22190-100002	Washer, 10
53	YA-26366-060002	Nut, M6
54	YA-114110-07760	Fuel Oil Label
55	YA-119225-52102	Fuel Feed Pump Assembly
56	YA-129940-55601	Fuel Filter Assembly
57	YA-129004-55612	Filter Bracket
58	YA-119802-55801	Fuel Filter
59	YA-129242-55700	Seperator Assembly
60	YA-129242-55720	Cup
61	YA-129242-55730	Element
62	YA-129242-55740	Drain Plug
63	YA-129242-55750	Air Vent Valve
64	YA-129242-55760	Plug Packing
65	YA-129242-55770	Float
66	YA-24311-000160	O-Ring, 1A P-16.0
67	YA-24321-000750	O-Ring, 1A G-75.0
68	YA-24316-000070	O-Ring, 4D P-7.0
69	YA-24316-000160	O-Ring, 4D P-16.0
70	YA-24326-000750	O-Ring, 4D G75

Yanmar 3TNV82A-BDCB Cooling Water System

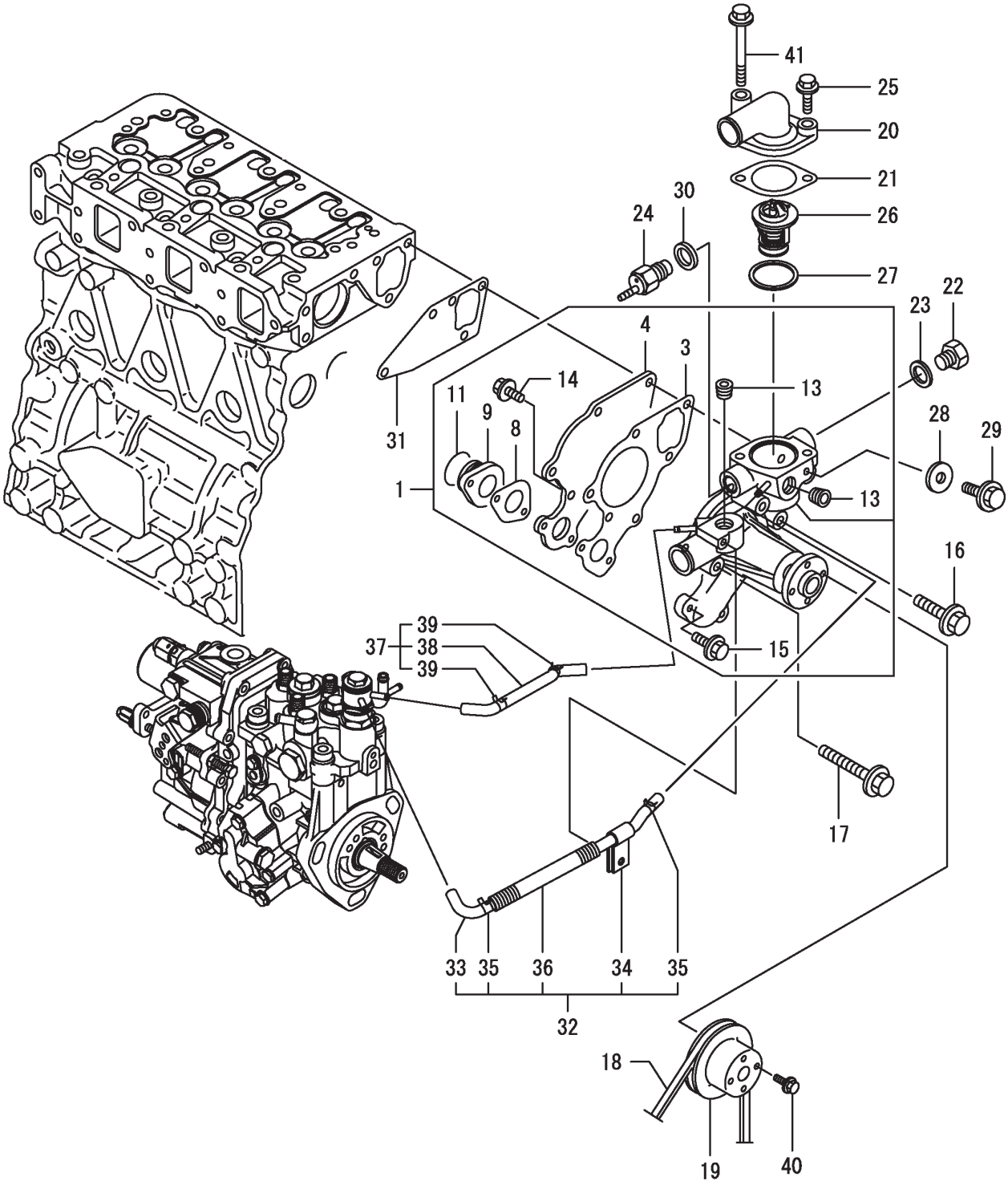

Ref.	Part Number	Description
1	YA-119802-42001	Water Pump Assembly
3	YA-119810-42051	Water Pump Gasket
4	YA-119810-42120	Plate
8	YA-119810-42281	Water Pump Gasket
9	YA-119810-42290	Pump Pipe
11	YA-129054-42320	O-Ring
13	YA-23876-030000	Screw Plug, PT ⅜
14	YA-26106-060142	Bolt, M6 x 14
15	YA-26106-060202	Bolt, M6 x 20
16	YA-26106-080352	Bolt, M8 x 35
17	YA-26106-080552	Bolt, M8 x 55
18	YA-119865-42290	V-Belt, A36.5
19	YA-129155-42350	Pump V-Pulley
20	YA-124101-49531	Thermostat Cover
21	YA-129795-49551	Cover Gasket
22	YA-124450-42450	Plug, M16
23	YA-124465-44950	Gasket, 16
24	YA-121250-44901	Thermostat Switch
25	YA-26106-080252	Bolt, M8 x 25
26	YA-129155-49801	Thermostat
27	YA-129150-49811	Thermostat Gasket
28	YA-23414-080000	Round Gasket, 8
29	YA-26106-080122	Bolt, M8 x 12
30	YA-124465-44950	Gasket, 16
31	YA-129486-42050	Water Pump Gasket
32	YA-119802-49610	Water Pipe, MP2 A
33	YA-119802-49711	Water Pipe, MP2 A
34	YA-119802-49730	Pipe Clamp
35	YA-124722-59050	Hose Clip
36	YA-119802-59320	Corrugated Tube
37	YA-119802-49620	Water Pipe, MP2 B
38	YA-119802-49721	Water Pipe, MP2 B
39	YA-124722-59050	Hose Clip
40	YA-26106-060122	Bolt, M6 x 12
41	YA-26106-080652	Bolt, M8 x 65

Yanmar 3TNV82A-BDCB Fuel Injection Pump

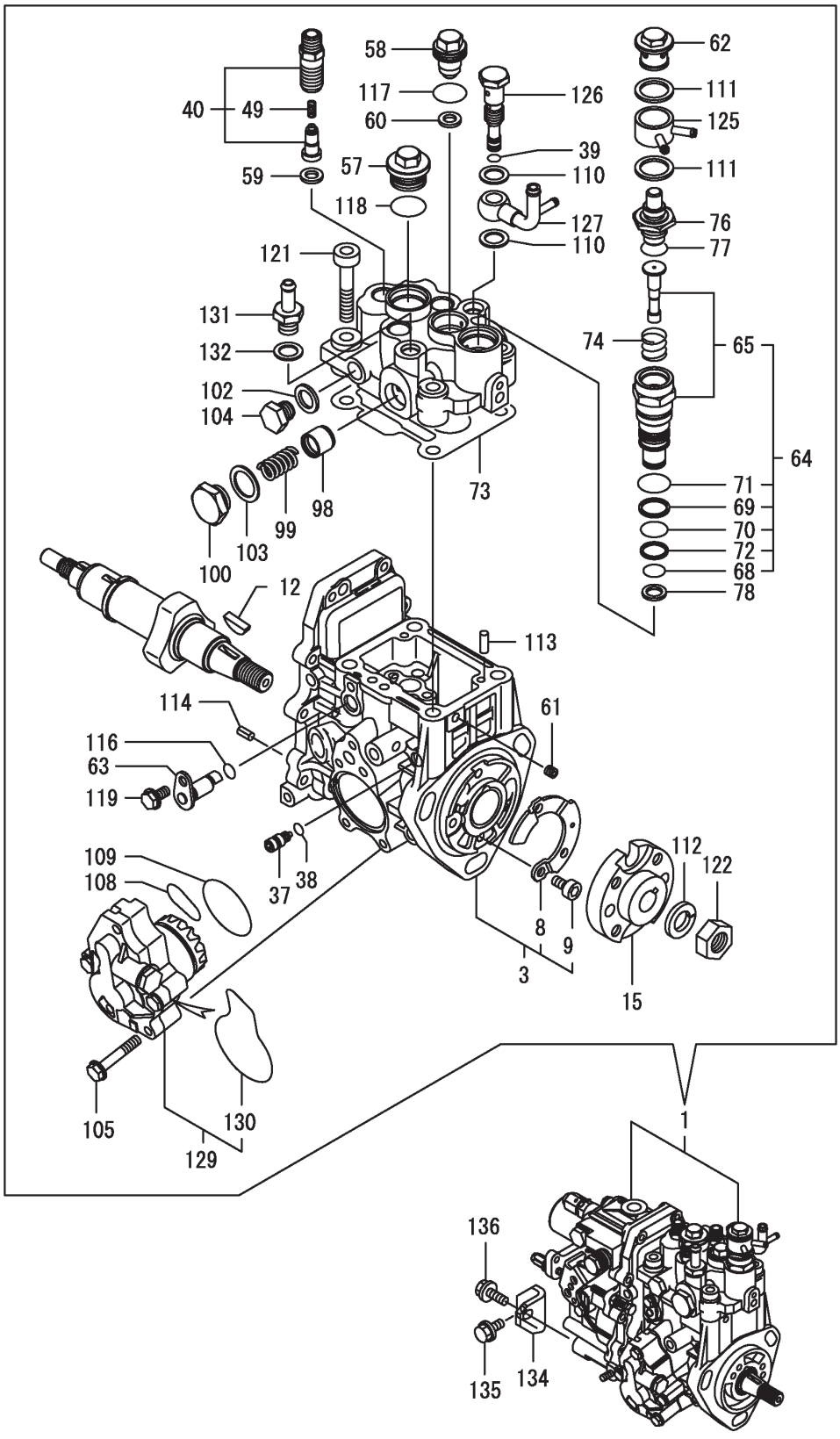

Ref.	Part Number	Description
1	YA-719980-51391	Injection Pump Assembly
3	YA-158552-51080	Pump Assembly Body
8	YA-129008-51900	Cover
9	YA-129008-51920	Bolt, M6 x 10
12	YA-119802-51090	Woodruff Key, 4 x 16
15	YA-158552-51151	Hub-Injection Pump Gear Cam
37	YA-158600-51270	Tappet Stopper
38	YA-158563-51281	O-Ring
39	YA-158563-51281	O-Ring
40	YA-129008-51390	Delivery Setting
49	YA-158563-51330	Delivery Spring
57	YA-158601-51550	Plug
58	YA-119802-51560	Barrel Plug
59	YA-158552-51571	Barrel Plug (PK)
60	YA-158552-51571	Barrel Plug (PK)
61	YA-158557-51570	Plug
62	YA-158601-51570	Water Pump Plug
63	YA-158552-51580	Lifter
64	YA-119802-51590	Timer Set
65	YA-119802-51590	Complete Timer
68	YA-158553-51670	O-Ring, 1011
69	YA-119802-51680	Back-Up Ring
70	YA-119802-51690	O-Ring
71	YA-24356-190200	Packing, 19020
72	YA-24372-000150	Back-Up Ring, T2 P 15
73	YA-158552-51600	Head Packing
74	YA-158553-51630	Timer Spring
76	YA-158553-51650	Thermostat Element
77	YA-158553-51660	O-Ring, P14
78	YA-158553-51680	Timer Packing

Ref.	Part Number	Description
98	YA-158601-51770	Piston
99	YA-158552-51781	Actuator Spring
100	YA-158601-51790	Plug
102	YA-22190-120002	Seal Washer, 12
103	YA-22190-180002	Washer, 18
104	YA-158553-51930	Plug, M12
105	YA-158553-51770	Bolt
108	YA-158552-52311	O-Ring
109	YA-158552-52400	O-Ring, 4E S42
110	YA-22190-120002	Seal Washer, 12
111	YA-22190-180002	Washer, 18
112	YA-22217-140000	Spring Washer, 14
113	YA-22312-050140	Parallel Pin, 5 x 14
114	YA-22351-050010	Spring Pin, 5 x 10
116	YA-24311-000070	O-Ring, 1A P-7.0
117	YA-24356-190180	Packing, 19018
118	YA-24356-190200	Packing, 19020
119	YA-26106-060102	Bolt, 6 x 10
121	YA-26450-080452	Bolt, M8 x 45
122	YA-26776-140002	Lock Nut, M14
125	YA-158553-51551	Cooling Water Joint
126	YA-158601-51650	Over-Flow Joint
127	YA-158552-51670	Over-Flow Joint
129	YA-158552-52100	Fuel Feed Pump Assembly
130	YA-158552-52500	Pump O-Ring
131	YA-119934-59910	Pipe Joint
132	YA-22190-120002	Seal Washer, 12
134	YA-119802-51250	Pump Retainer
135	YA-26106-080162	Bolt, M8 x 16
136	YA-26106-080202	Bolt, M8 x 20

Yanmar 3TNV82A-BDCB Governor

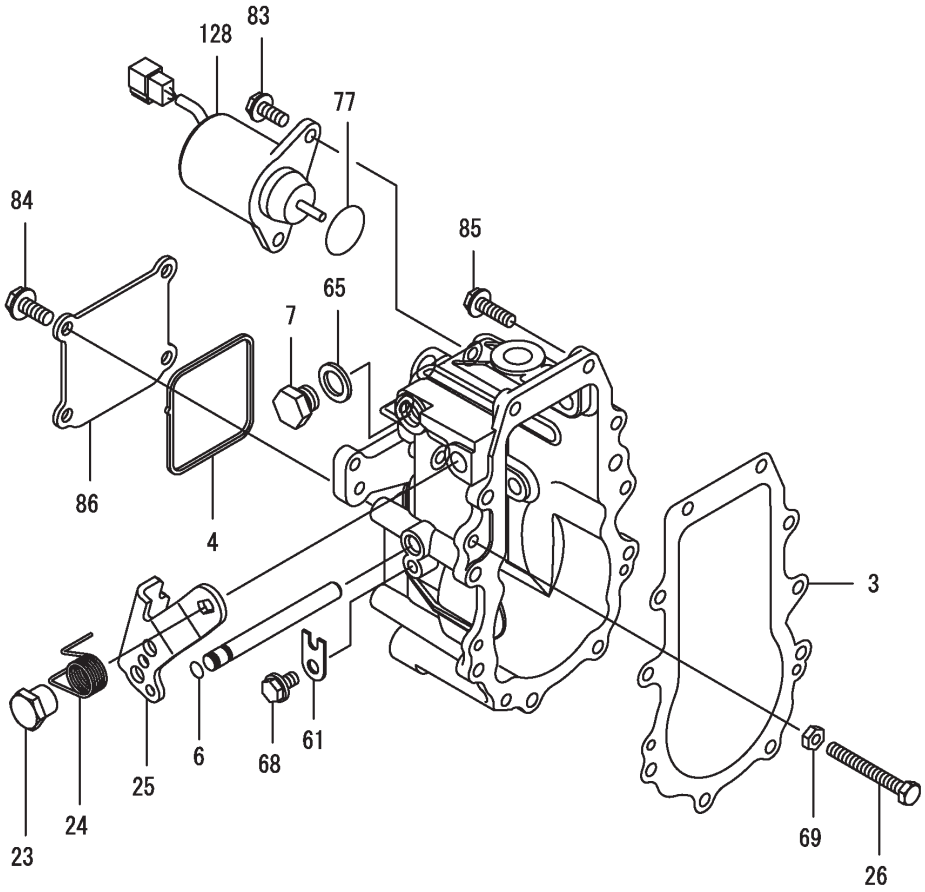

Ref.	Part Number	Description
3	YA-158553-61050	Case Packing
4	YA-158553-61070	Cover Packing
6	YA-129155-51280	O-Ring, S6
7	YA-158553-51930	Plug, M12
23	YA-129255-61410	Nut
24	YA-119807-61420	Return Spring
25	YA-158552-61441	Regulator Lever
26	YA-129155-61460	Idle Bolt
61	YA-119660-61901	Shaft Retainer

Ref.	Part Number	Description
65	YA-22190-120002	Seal Washer, 12
68	YA-26106-060102	Bolt, 6 x 10
69	YA-26756-060002	Lock Nut, 6
77	YA-158552-61900	O-Ring
83	YA-26106-060142	Bolt, M6 x 14
84	YA-26106-060142	Bolt, M6 x 14
85	YA-26106-060202	Bolt, M6 x 20
86	YA-129642-61060	Governor Case Cover
128	YA-119653-77950	Stop Solenoid

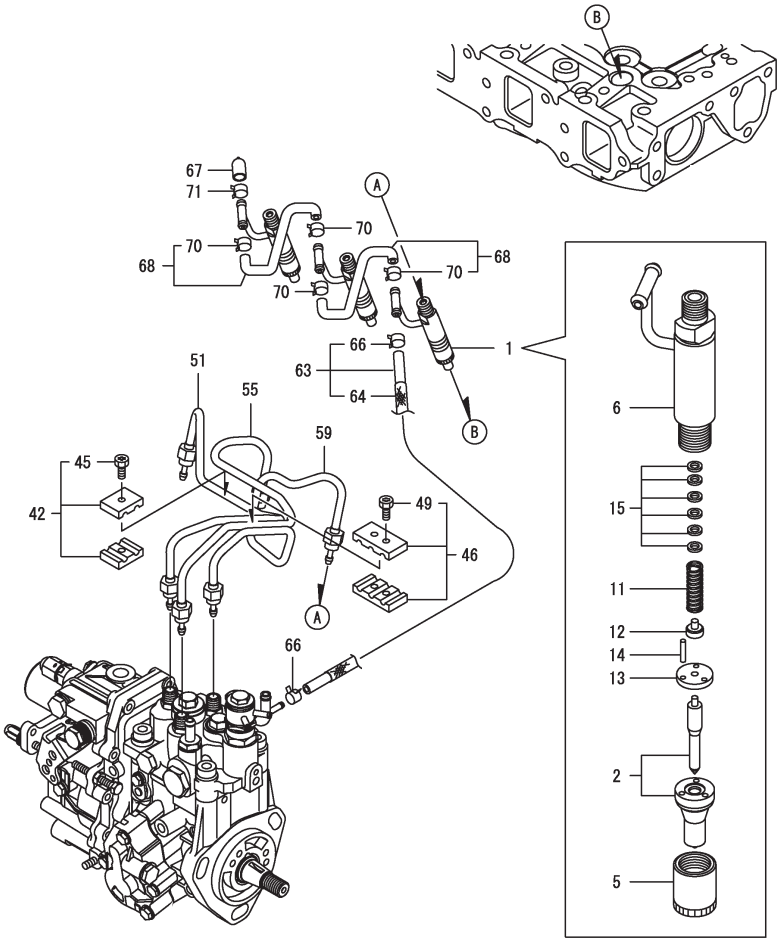

Ref.	Part Number	Description
1	YA-729008-53100	Injection Valve Assembly
2	YA-129008-53000	Injection Valve Assembly
5	YA-114250-53080	Case Nut
6	YA-119802-53100	Nozzle Holder Assembly
11	YA-114250-53120	Nozzle Spring
12	YA-114250-53130	Spring Seat
13	YA-114250-53140	Stop Plate
14	YA-114250-53210	Pin
15	YA-119803-53800	Shim Set
42	YA-119305-59120	Retainer
45	YA-129150-59131	Hex Socket Bolt, M4 x 14
46	YA-129150-59120	Pipe Retainer

Ref.	Part Number	Description
49	YA-129150-59131	Hex Socket Bolt, M4 x 14
51	YA-119802-59960	Injection Pipe Assembly
55	YA-119802-59970	Injection Pipe Assembly
59	YA-119802-59980	Injection Pipe Assembly
63	YA-129268-59551	Return Pipe Assembly
64	YA-129237-59120	Hose Protector
66	YA-23080-010000	Clamp, 10
67	YA-119593-59581	Cap
68	YA-129486-59581	Fuel Return Hose
70	YA-23080-010000	Clamp, 10
71	YA-23080-010000	Clamp, 10

Yanmar 3TNV82A-BDCB Starting Motor

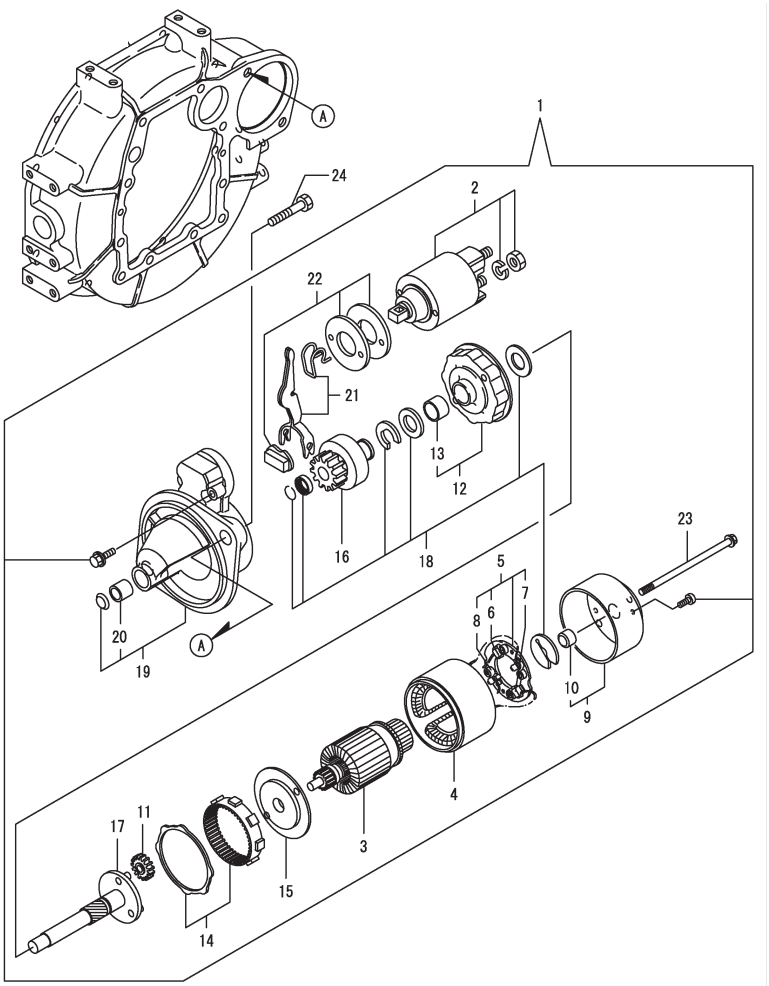

Ref.	Part Number	Description
1	YA-129242-77010	Starter
2	YA-129698-77020	Magnetic Switch Assembly
3	YA-129242-77100	Armature Assembly
4	YA-129242-77110	Yoke Assembly
5	YA-129242-77120	Brush Holder Assembly
6	YA-129242-77130	Brush (-)
7	YA-129242-77140	Brush (+) Set
8	YA-129242-77150	Brush Spring
9	YA-129242-77160	Rear Cover Assembly
10	YA-129242-77170	Rear Cover Metal
11	YA-118400-77170	Planet Gear
12	YA-129242-77180	Center Bracket (P)

Ref.	Part Number	Description
13	YA-129698-77190	Bracket
14	YA-129698-77200	Internal Gear
15	YA-129242-77210	Center Bracket (A)
16	YA-129698-77220	Pinion Assembly
17	YA-129698-77230	Shaft (Pinion)
18	YA-129698-77250	Washer Set
19	YA-129242-77260	Gear Case Assembly
20	YA-X2114535200	Starter Metal
21	YA-129242-77270	Shif Lever Set
22	YA-129242-77280	Dust Cover Kit
23	YA-124195-77770	Through Bolt
24	YA-26116-120202	Bolt, M12 x 20

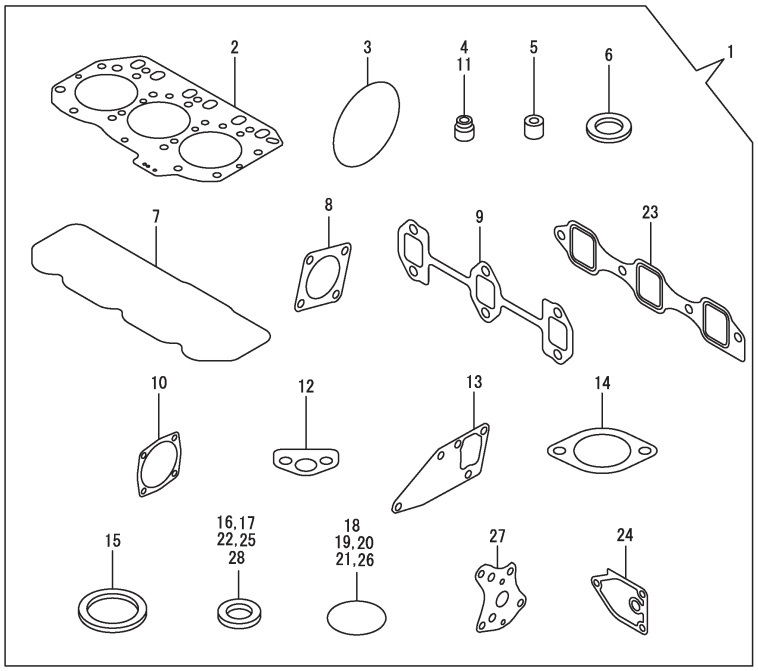

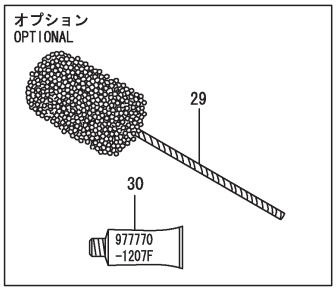

Ref.	Part Number	Description
1	YA-119936-92600	Complete Packing Set
2	YA-119812-01330	Head Gasket
3	YA-121850-51960	Pump O-Ring, F.I.
4	YA-119803-11340	Valve Stem Seal
5	YA-119802-11870	Nozzle Protector
6	YA-119625-11880	Nozzle Seat
7	YA-119802-11310	Bonnet Gasket
8	YA-124240-01883	Pump Gasket
9	YA-119810-13110	Exhaust Manifold Gasket
10	YA-129150-01881	Gasket
11	YA-124160-11340	Valve Stem Seal
12	YA-129150-35042	Pipe Gasket
13	YA-129486-42050	Water Pump Gasket
14	YA-129795-49551	Cover Gasket
15	YA-129150-49811	Thermostat Gasket

Ref.	Part Number	Description
16	YA-23414-080000	Round Gasket, 8
17	YA-22190-080002	Seal Washer, 8S
18	YA-24316-240100	O-Ring, 4D P-10A
19	YA-24311-000120	O-Ring, 1A P-12.0
20	YA-24311-000320	O-Ring, 1A P-32.0
21	YA-24341-000240	O-Ring, 1A S-24.0
22	YA-22190-100002	Washer, 10
23	YA-119810-12112	Manifold Gasket
24	YA-129150-35111	Gasket
25	YA-22190-220002	Washer, 22
26	YA-119609320401	O-Ring, P16
27	YA-129150-32020	Pump Gasket
28	YA-124465-44950	Gasket, 16
29	YA-129400-92420	Flex Horn
30	YA-977770-1207F	Liquid Gasket

Yanmar 3TNV82A-BDCB Generator

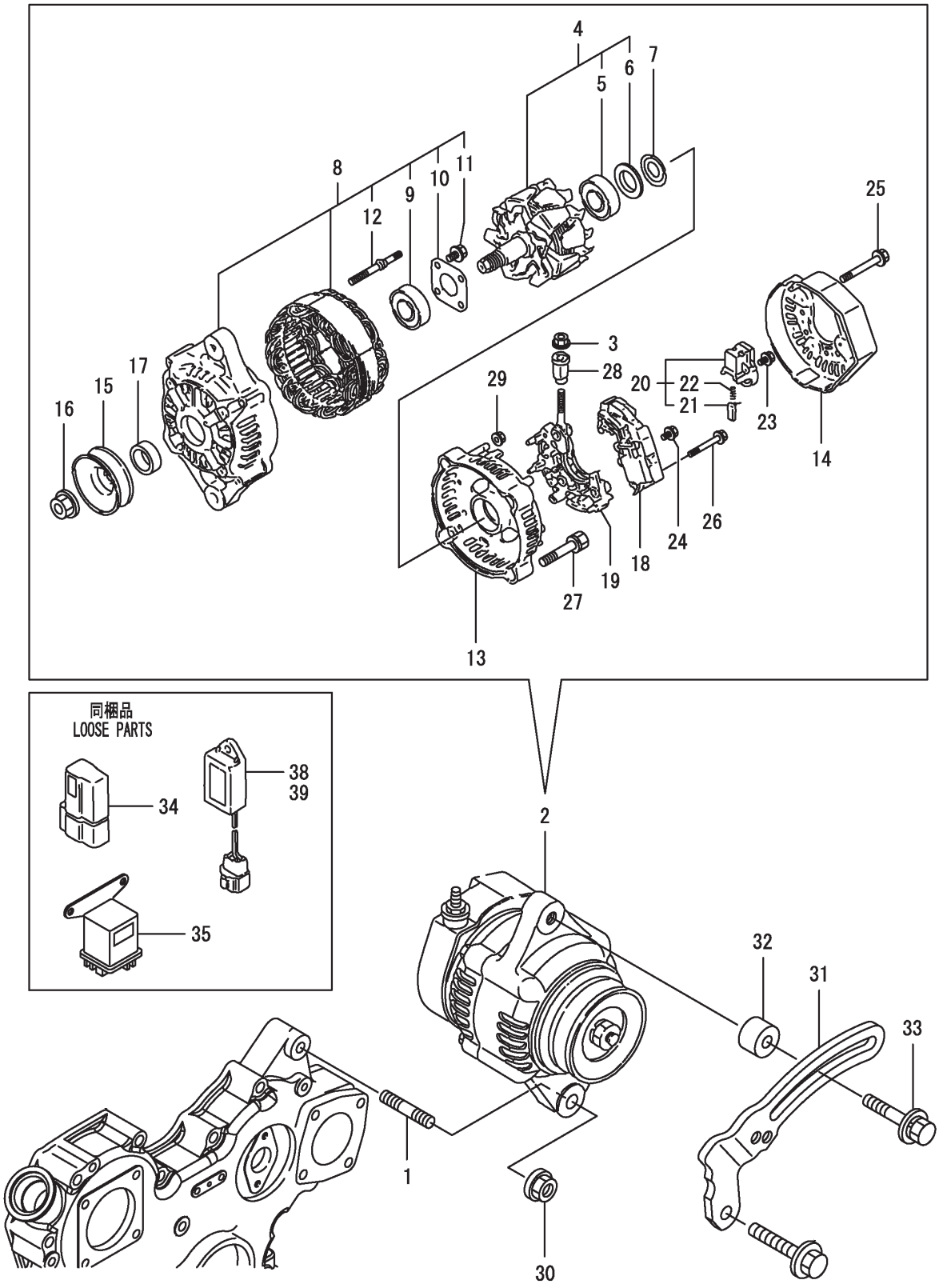

Ref.	Part Number	Description
1	YA-129795-01900	Stud
2	YA-119620-77201	Generator, 40A
3	YA-X9490561001	Nut
4	YA-119620-77380	Rotor Assembly
5	YA-123501-79240	Ball Bearing
6	YA-119620-79250	Bearing Cover
7	YA-119620-79360	Thrust Washer
8	YA-119620-77421	Drive Flame Assembly
9	YA-119620-79200	Ball Bearing
10	YA-119620-79210	Retainer Plate
11	YA-119620-79220	Screw
12	YA-119620-79230	Stud
13	YA-119620-77440	Rear Flame Assembly
14	YA-119620-77450	Rear End Cover
15	YA-119620-77461	Pulley
16	YA-119620-77471	Nut
17	YA-119620-77490	Collar
18	YA-119620-77710	Requlator Assembly
19	YA-119620-79260	Holder
20	YA-119620-79270	Brush Holder
21	YA-119620-77480	Brush Assembly
22	YA-119620-79280	Spring
23	YA-119620-79290	Screw
24	YA-119620-79300	Screw
25	YA-119620-79310	Bolt
26	YA-119620-79320	Screw
27	YA-119620-79330	Bolt
28	YA-119620-79340	Insulation Bushing
29	YA-119620-79350	Nut
30	YA-26306-100002	Nut, M10
31	YA-129064-77330	Belt Adjuster
32	YA-129067-77340	Spacer
33	YA-129972-77341	Adjuster Bolt
34	YA-119643-66900	Diode
35	YA-119650-77910	Grow Relay
38	YA-128300-77920	Timer
39	YA-129211-77920	Timer

Electrical Schematic

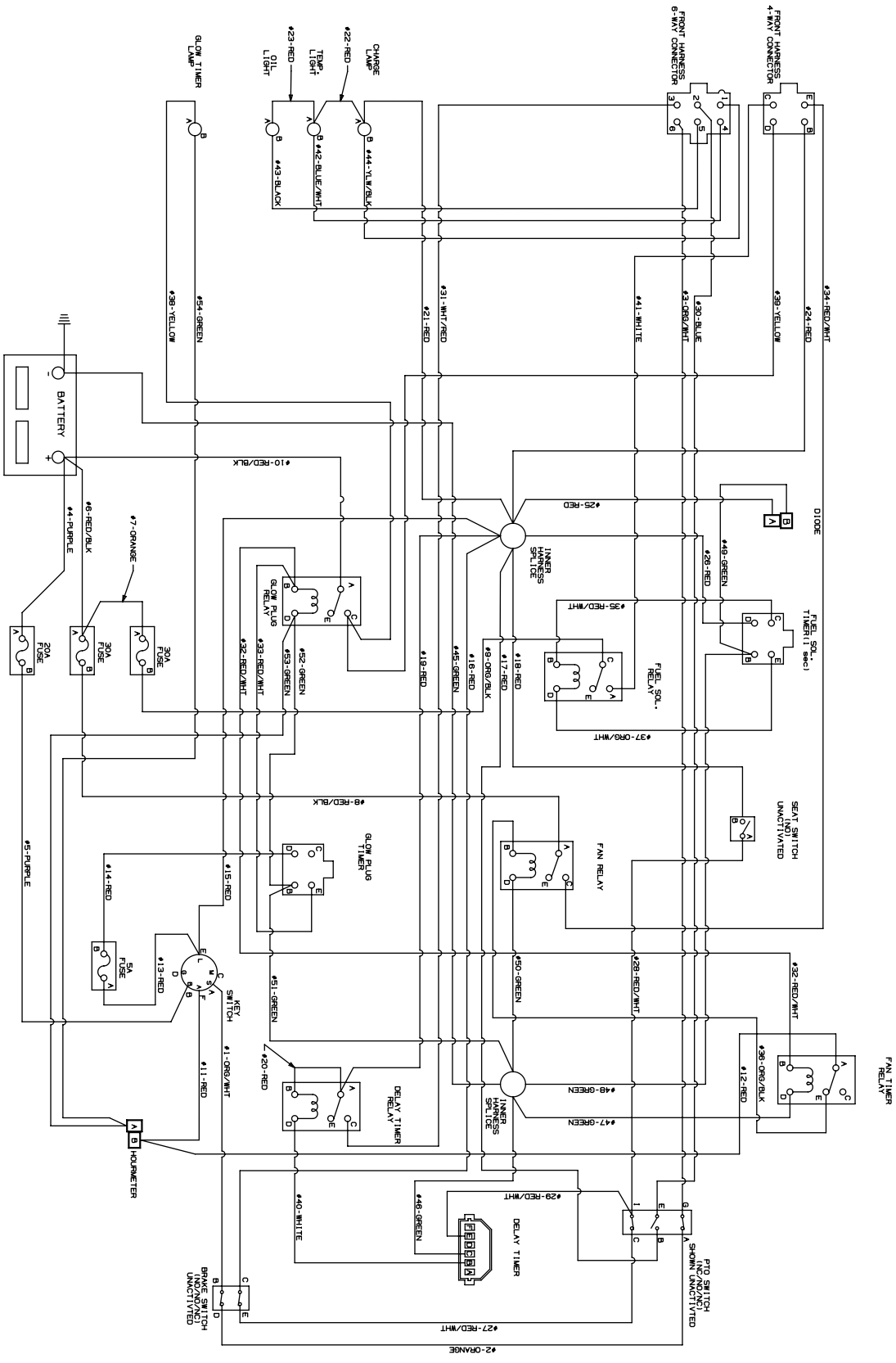

TANK S Diesel Labels, U.S.

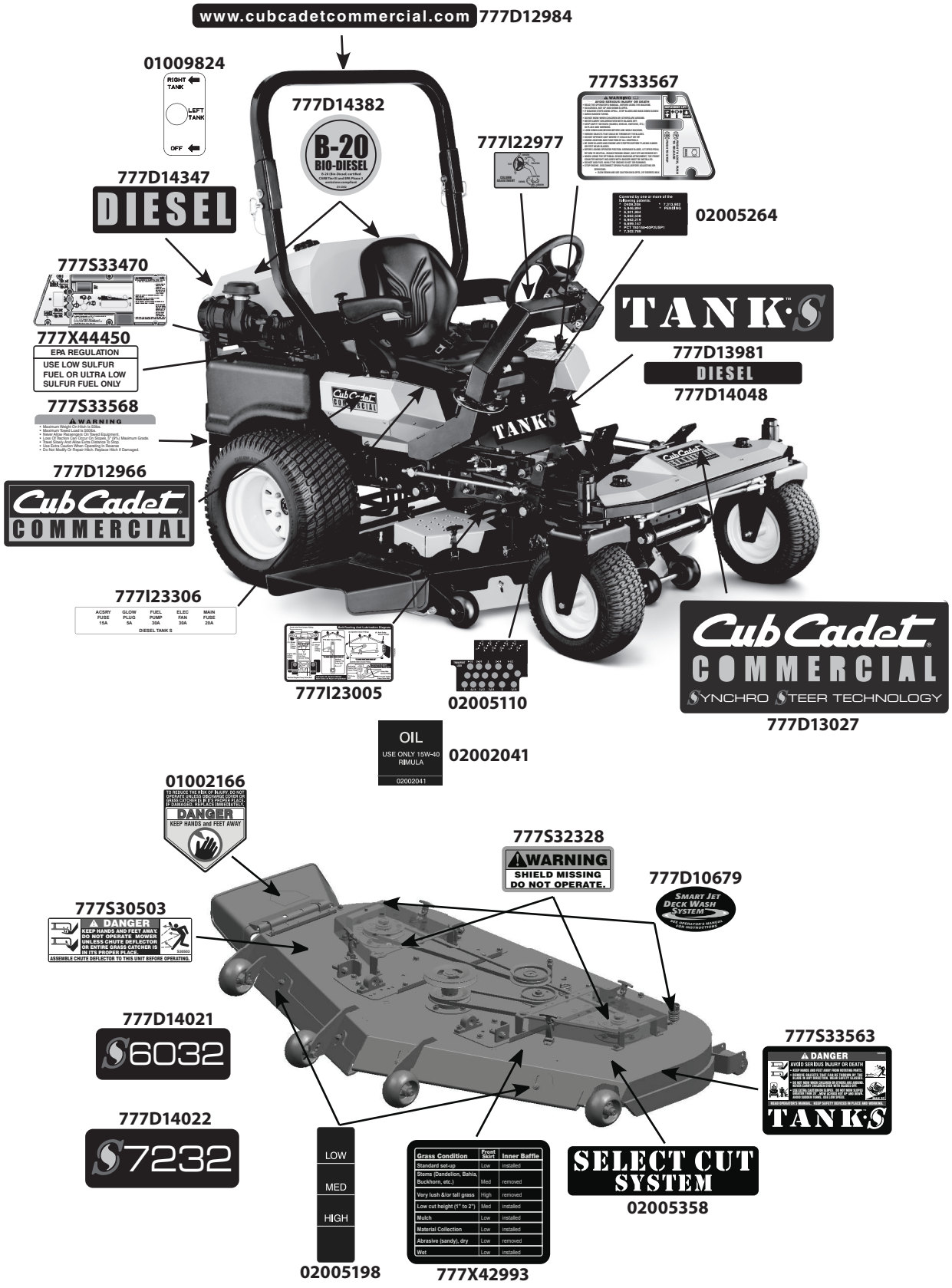

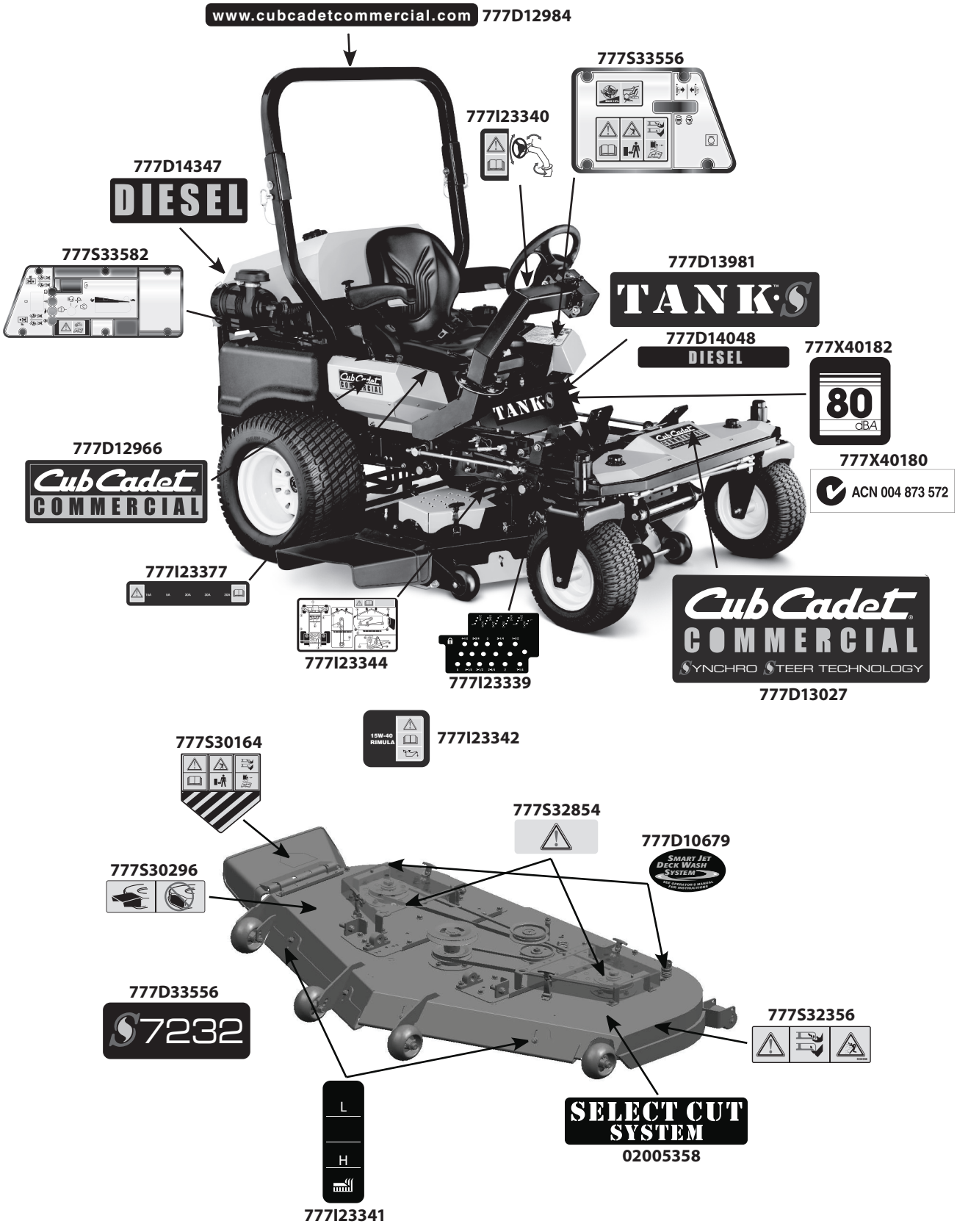
www.cubcadetcommercial.com
777D12984
777S33556
777I23340
777D14347
DIESEL
777S33582
777D13981
TANK S
777D14048
DIESEL
777X40182
80
dBA
777D12966
Cub Cadet
COMMERCIAL
777X40180
ACN 004 873 572
777I23377
777I23344
777I23339
Cub Cadet
COMMERCIAL
SYNCHRO STEER TECHNOLOGY
777D13027
15W-40
777I23342
777S30164
777S32854
777D10679
SMART JET
DECK WASH
SYSTEM
777S30296
777D33556
S7232
777S32356
L
H
SELECT CUT
SYSTEM
02005358
777I23341

Notes



To order replacement parts, call a Customer Support Representative at (800) 965-4CUB.
Locate your nearest Cub Cadet dealer at (877) 282-8684
or visit www.cubcadet.com to find the nearest Cub Cadet dealer in your area.

CUB CADET LLC, P.O. BOX 361131 CLEVELAND, OHIO 44136-0019