# Supplement Sheet

Date: January 7, 2010
Subject: Hood Assembly
Model(s): 53AY8DU6050
53AY8DU8050
53AY8DU6603

Before operating the S6032D or the S7232D tractor, the hood assembly must be installed.

## Contents of Hood Assembly Box

1 — Hood Assembly

2 — Flange Lock Nuts, ¼-20

2 — Shoulder Screws, .375 x .181

## Install the Hood Assembly

Place the hood assembly on the rear of the tractor and secure with the flange lock nuts and shoulder screws. See Fig. 1.

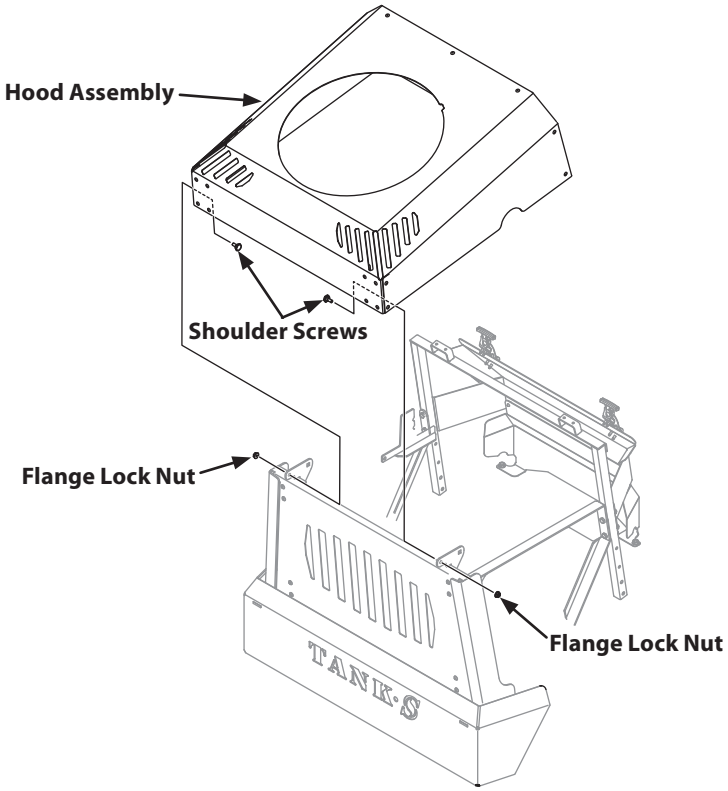


**Figure 1**

**CUB CADET LLC, P.O. BOX 361131 CLEVELAND, OHIO 44136-0019**

Printed In USA

Form No. 769-05788
(January 7, 2010)