Cub Cadet COMMERCIAL

ILLUSTRATED PARTS MANUAL

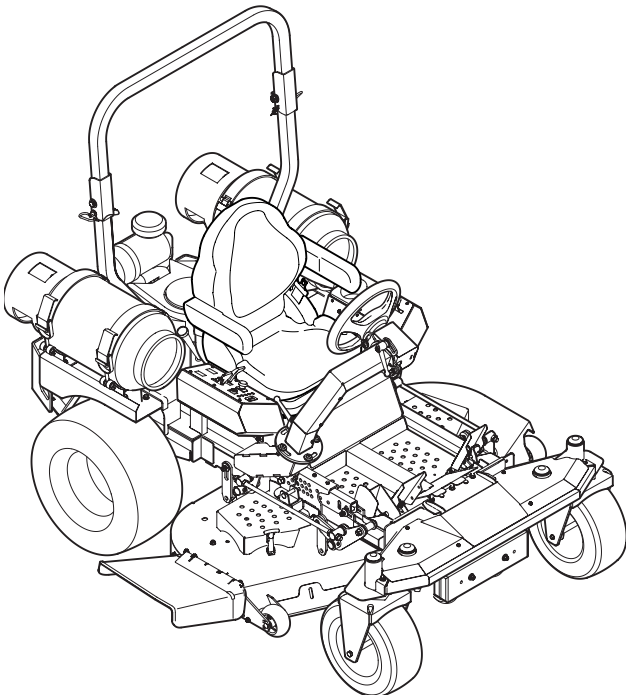

Tank S
Liquid Propane Gas

CUB CADET LLC, P.O. BOX 361131 CLEVELAND, OHIO 44136-0019

Printed In USA

Form No. 769-06017
February 7, 2011

To The Owner

Thank You

Thank you for purchasing a Cub Cadet Commercial Zero-Turn Tractor. It was carefully engineered to provide excellent performance when properly operated and maintained.

All information in this manual is relative to the most recent product information available at the time of printing. Please be aware that this Illustrated Part's Manual may cover a range of product specifications for various models.

Components listed and/or illustrated in this manual may not be applicable to all models. We reserve the right to change product specifications, designs and equipment without notice and without incurring obligation.

Throughout this manual, all references to *right* (RH) and *left* (LH) are observed from the operating position.

Table of Contents

Battery.....12
Brake Pedal Assembly.....20
Bumper.....19
Consoles/Control Panels.....10
Deck Assembly, 60".....26
Deck Assembly, 72".....28
Deck Lift Assembly.....22
Deck Spindle Assembly, 60".....30
Deck Spindle Assembly, 72".....32
Electrical.....12
Electrical Schematic.....35
Engine Accessories, 60" & 72" Deck.....24
Engine, Kawasaki FX850V-S11.....38-50
Engine, Kawasaki FX1000-S09.....51-63
Frame.....3
Front Axle.....16
Fuel Tank Bracket Assembly.....5
Hydro Controls.....6
Hydro Hoses & Motors.....8
Labels.....36
Pedal Controls.....13
Propane Accessories.....34
ROPS.....4
Seat.....4
Steering Controls.....14
Steering Wheel/Steering Column.....18
Wheels, Front & Rear.....11

Record Product Information

To ease in ordering replacement parts, please locate the model plate on the equipment and record the information in the provided area to the right. You can locate the model plate by looking beneath the seat.

MODEL NUMBER

SERIAL NUMBER

Painted Parts

When ordering painted service parts, a four digit color suffix must be added to the part number (e.g. 783-XXXXX-0637). Please refer to the table below for current color codes:

0637	Black
4021	Yellow (Cub Cadet)
0499	Beige (Cub Cadet)
0685	Blue (Cub Cadet)
0691	Black Jack (Cub Cadet Commercial)

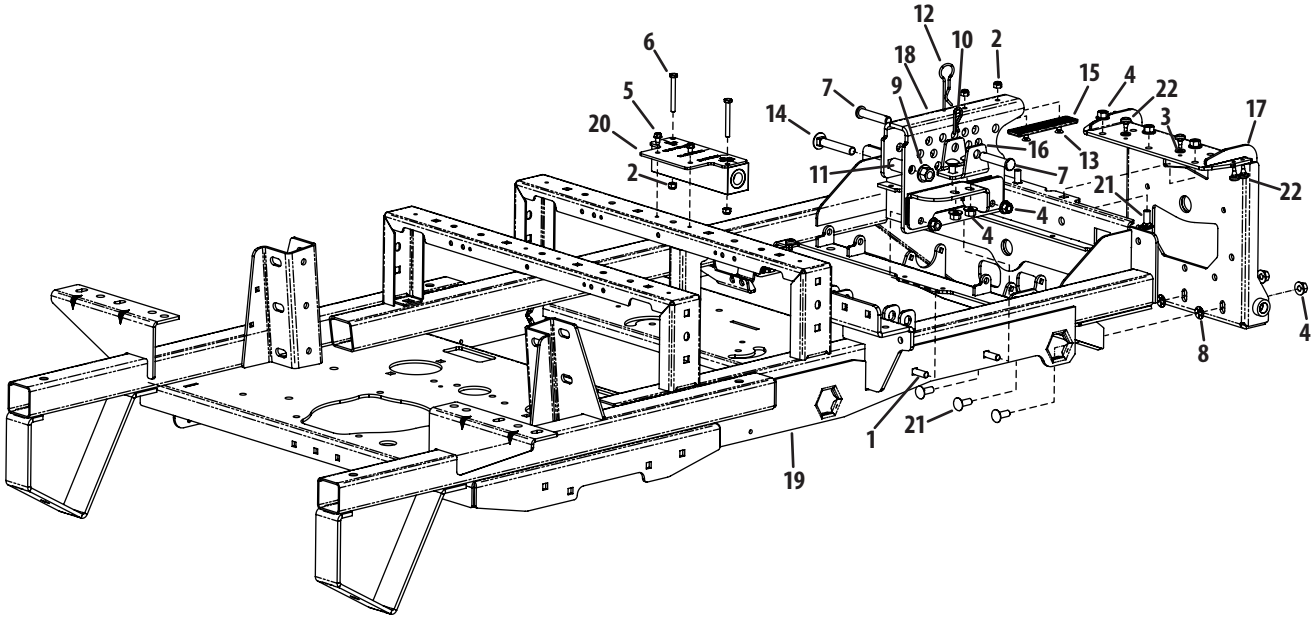

Ref	Part Number	Description
1	00005765	Carriage Bolt, ⅜-16 x 1.25
2	00012152	Nylock Nut, ¼-20
3	00012169	Washer. .344 x .688 x .063
4	00022560	Flange Counterlock Nut, ⅜-16
5	710-0599	Hex Flange Screw, ¼-20 x .500
6	710-0641	Hex Screw, ¼-20 x 2.25
7	711-0761	Clevis Pin, ½ x 2.500
8	01008225	Push Nut, .335 x .780 x .015
9	01010119	Flange Top Lock Nut, ½-13
10	02000673	Hair Pin, ½ x 1.625 x .125
11	02002655	Spacer, .510 x .750 x 1.25

Ref	Part Number	Description
12	02003074	Hitch Pin, .120 X 3.00
13	02003505	Flat Screw, ¼-20 X .750
14	02003563	Carriage Bolt, ½-13 X 3.00
15	02003749	Wear Plate, 1.125 x 5.0
16	02005357-0637	Cylinder Mount Bracket
17	603-04668-0637	Front Axle Brakcet Assembly
18	680-00094-0637	Index Lift Housing Assembly
19	680-00123-0637	Frame Assembly
20	703-07098-0637	Manifold Mount Bracket
21	710-3168	Carriage Bolt, ⅜-16 x 1.00
22	935-0199A	Rubber Bumper, .62 x .22

Seat Assembly

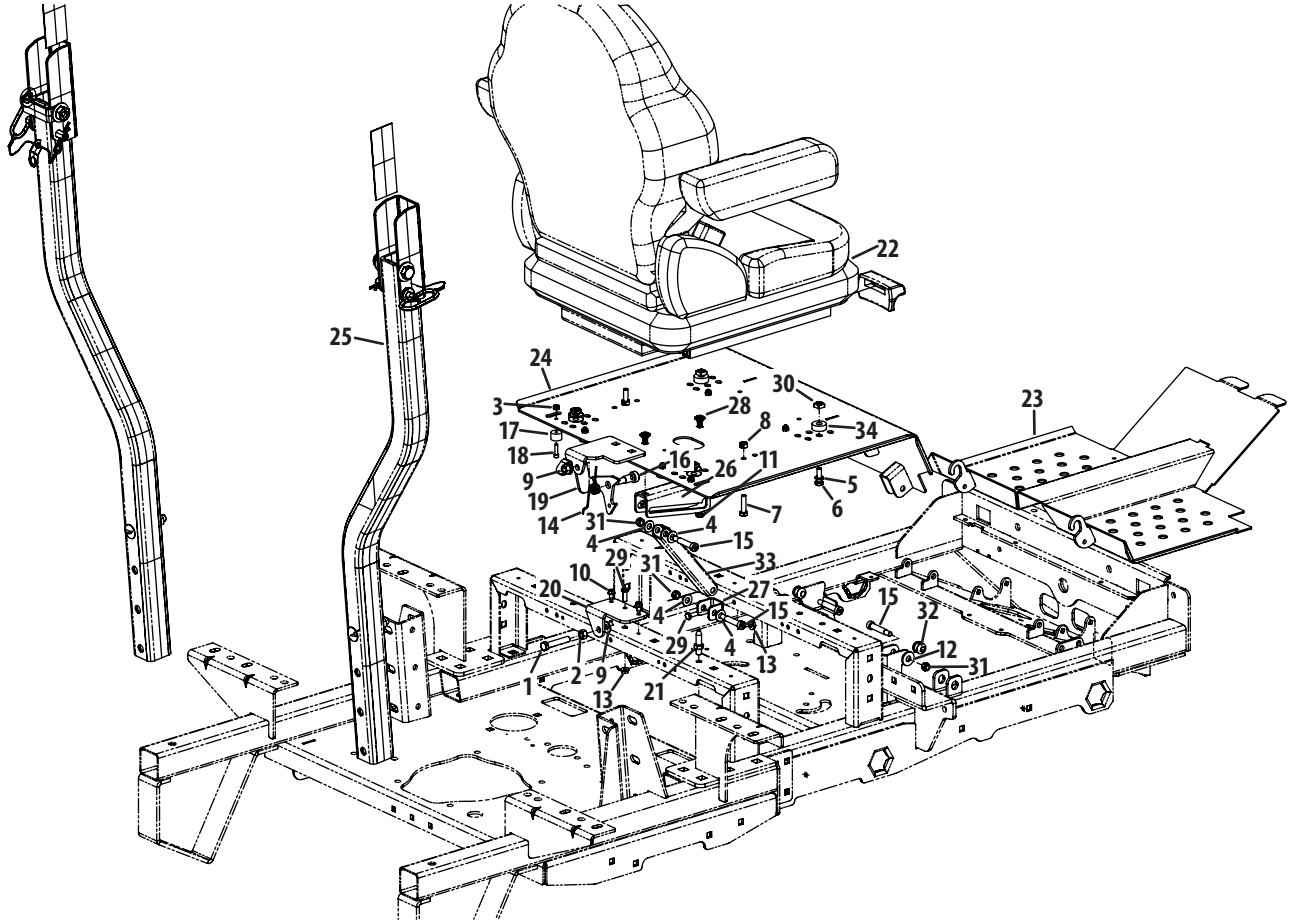

Ref.	Part Number	Description
1	00002528	Hex Screw, ⅜-16 x 2.00
2	912-3017	Nut, ⅜-16
3	712-0161	Nylock Nut, #10-24
4	00012158	Wsdher, .406 x .813 x .063
5	00012168	Lock Washer, .312 x .583 x .083
6	00012180	Hex Screw, 5⁄16-18 x 1.00
7	00013116	Hex Screw, 5⁄16-18 x 1.25
8	712-04063	Flange Lock Nut, 5⁄16-18
9	00022560	Flange Counter Lock Nut, ⅜-16
10	710-0599	Hex Screw, ¼-20 x .500
11	712-3004A	Flange Counter Lock Nut, 5⁄16-18
12	736-3052	Washer, .406 x 1.00 x .105
13	912-3027	Flange Top Lock Nut, 1/4-20
14	01008140P	LH Torsion Spring, .725 x 1.07 x .09
15	01009459	Shoulder Bolt, 5⁄16-18 x .37 x 1.50
16	02002091	Shoulder Bolt, ⅜-16 x .50 x .75
17	02002963	Bump Stop w/ Washer

Ref.	Part Number	Description
18	02002964	Flat Head Screw, #10-24 x .750
19	02003732	Lever Latch Bracket
20	02003738-0637	Mount Latch Bracket
21	02003745	Center Adjust Stud, .375 x 1.125
22	02004228	Suspension Seat w/ Seat Belt
23	680-00087-4021	Wide Assembly Floor Panel
24	680-00096-0637	Seat Mount Bracket Assembly
25	680-00110	Folding ROPS Assembly
26	703-07490	Seat Support Lock Bracket
27	703-07491	Seat Link Pivot Mount Bracket
28	710-0260A	Carriage Bolt, 5⁄16-18 x .62
29	710-3015	Hex Screw, ¼-20 x .75
30	712-04190	Nut
31	912-0429	Hex Lock Nut, 5⁄16-18
32	735-04159	Grommet, .38 x .75 x .75
33	749-04613	Link Tube
34	750-3119	Spacer, .406 x 1.00 x .38

Fuel Tank Bracket Assembly

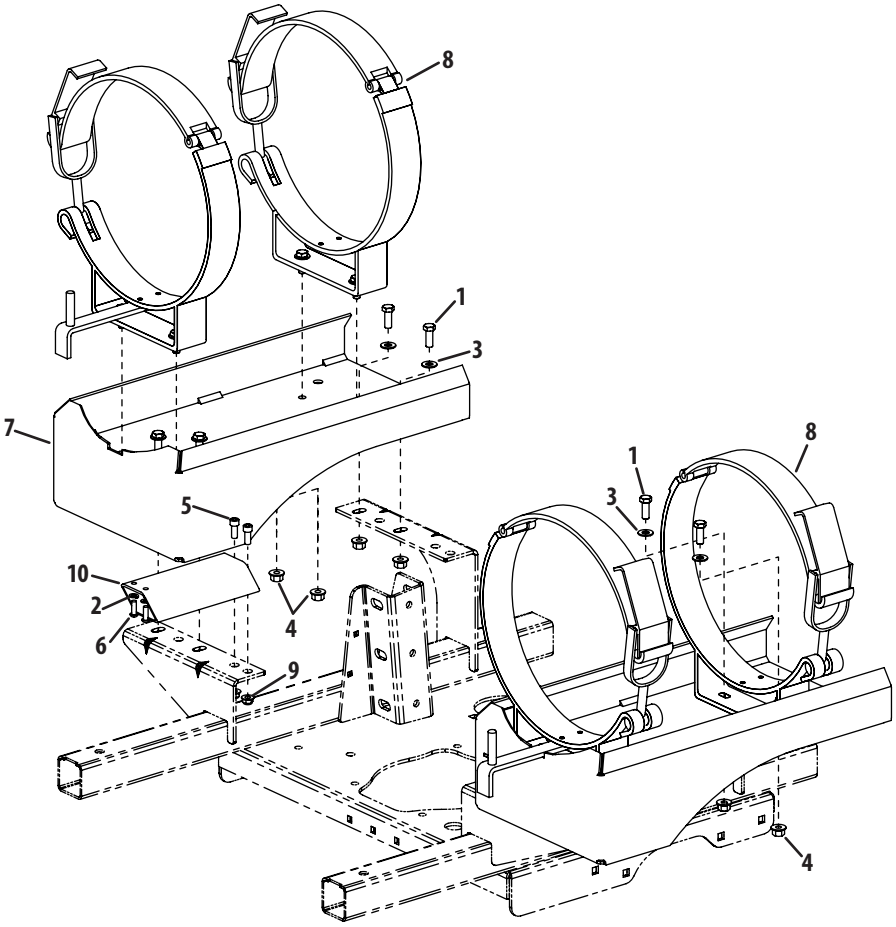

Ref.	Part Number	Description
1	00006144	Hex Screw, ⅜-16 x 1.00
2	936-0329	Lock Washer, ¼
3	00012158	Washer, .406 x .813 x .063
4	00022560	Flange Counter Lock Nut, ⅜-16
5	01007464	Socket Cap Screw, 5⁄16-18 x ¾
6	01009362	Button Cap Screw, ¼-20 x .750
7	680-00104-0637	LPG Tank Bracket Assembly
8	680-00113	LPG Tank Mount Bracket Assembly
9	712-04063	Flange Lock Nut, 5⁄16-18
10	749-04672-0637	Regulator Tube Bracket

Hydro Controls

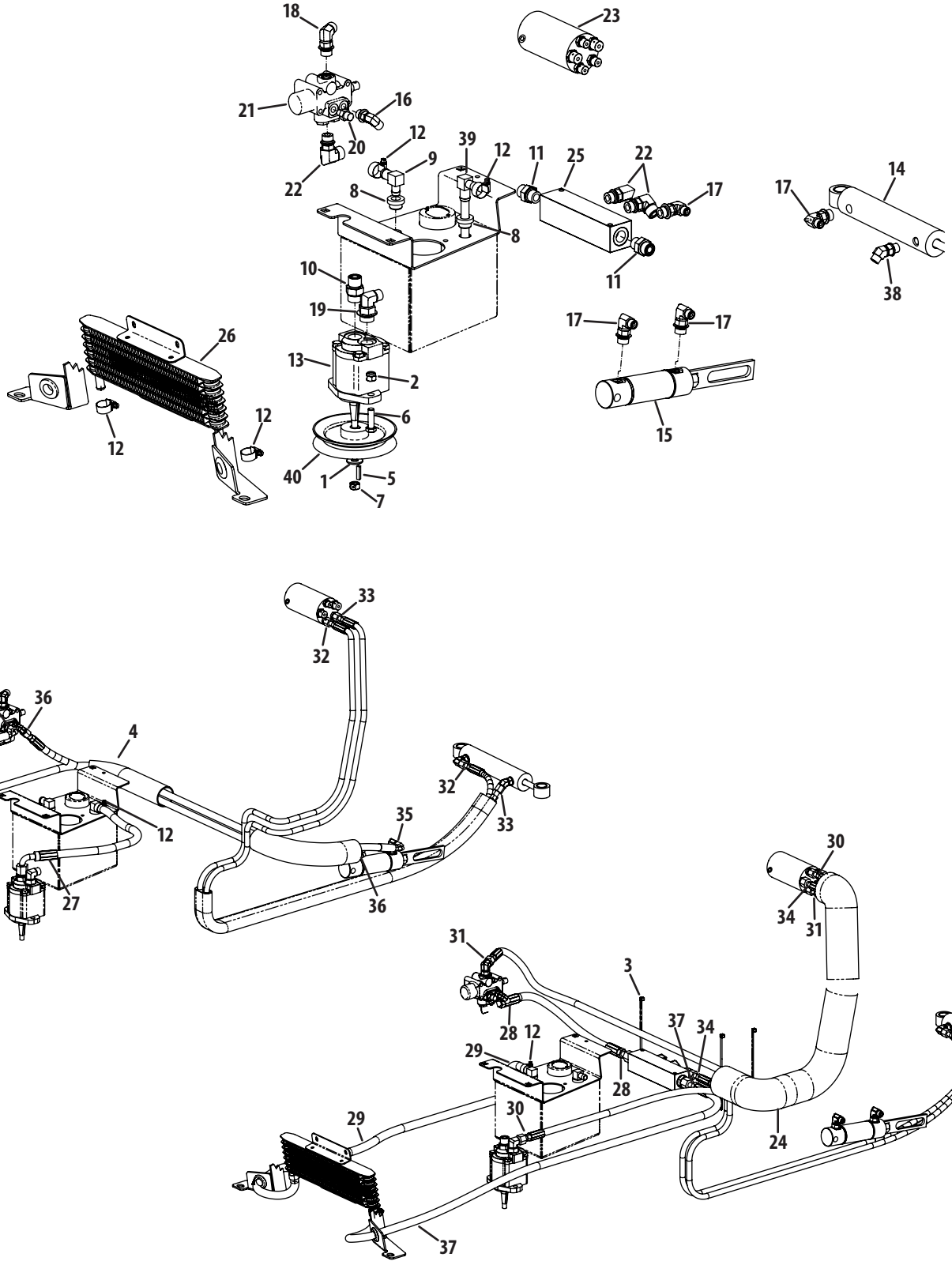

Ref.	Part Number	Description
1	00006168	Washer, .438 x 1.00 x .078
2	712-04065	Nylock Nut, ⅜-16
3	725-0157	Cable Tie
4	00012529	Reel Return Line Sleeve, 1.59
5	00020628	Key, .188 x .188 x .875
6	710-3005	Hex Screw, ⅜-16 x 1.25
7	01007309	Counterlock Nut, ⅜-24
8	02000296	Grommet, .54 x .78
9	02001151	Elbow Fitting, ⅝ x 1/2
10	02001715	Hydro Adapter, 8 x 10
11	02001975	Hydro Adapter, 8 x 8
12	02002392	Hose Clamp
13	02003193P	Gear Pump, 3.0
14	02003368P	Steering Cylinder
15	02003930	Hydro Cylinder, 1.50 x 2.75
16	02004642	Elbow Fitting, 40RB-40RS
17	02004643	Elbow Fitting, 40RS-60RB
18	02004644	Elbow Fitting, 60RB-60RS
19	02004645	Elbow Fitting, 60RS-80RB
20	02004687	Fitting, 40RB-40RS
21	02004696	Dual Action Lift Hydro Valve
22	02004837	Elbow Fitting
23	02005325	Hydro Steering Valve
24	02005462	Anti-Abrasion Sleeve
25	718-04563	Hydro Manifold, 8 x 6
26	918-3132	Oil Radiator
27	727-04275	Hose Assy. (Tank-Pump)
28	727-04281	Hose Assy. (Lift Valve-Manifold)
29	727-04286	Hose Assy. (Exchanger-Tank)
30	727-04303	Steering Valve Pump Hose Assy.
31	727-04304	Lift Valve Steering Valve Hose Assy.
32	727-04305	Steering Ext. Steering Valve Hose Assy.
33	727-04306	Steering Retractor Steering Valve Hose Assy.
34	727-04307	Manifold Steering Valve Hose Assy.
35	727-04309	Cylinder Retractor Lift Valve Hose Assy.
36	727-04310	Cylinder Extension Lift Valve Hose Assy.
37	727-04311	Exchanger Manifold Hose Assy.
38	727-04317	Elbow Fitting
39	737-04260	Elbow, ½ x ⅝
40	756-04381	Pulley

Hydro Hose & Pump Assembly

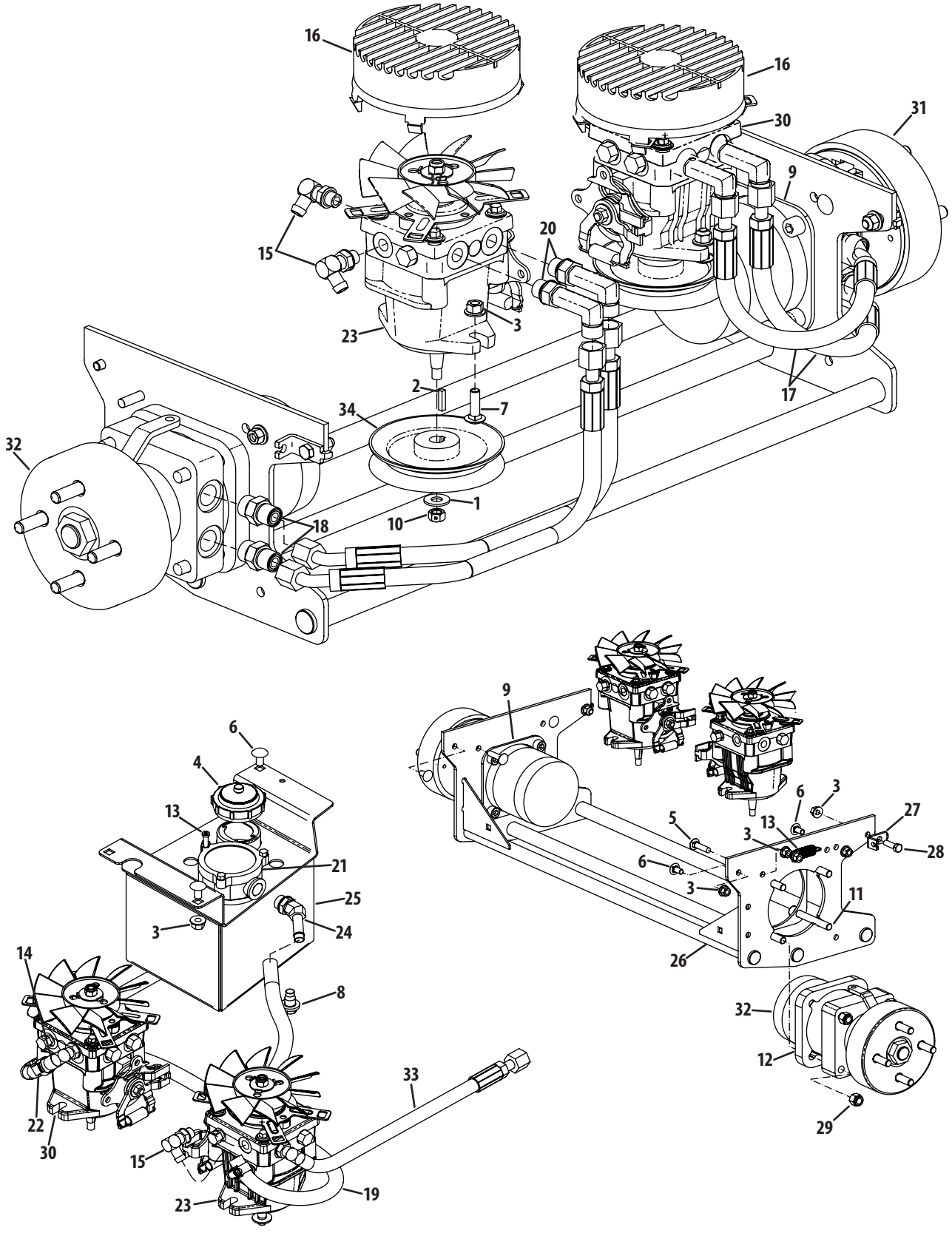

Ref.	Part Number	Description
1	00006168	Washer, .438 x 1.00 x .078
2	00020628	Key, .188 x .188 x .875
3	00022560	Flange Counter Lock Nut, ⅜-16
4	00030261	Hydro Oil Tank Cap
5	00030276	Carriage Bolt, ⅜-16 x 1.50
6	710-3178	Carriage Bolt, ⅜-16 x .75
7	710-3034	Carriage Bolt, ⅜-16 x 1.25
8	738-0940	Oil Drain Plug, w/ Seal
9	01006949	Motor Back-Up Plate
10	01007309	Counter Lock Nut, ⅜-24
11	01007791	Socket Cap Screw, ½-13 x 3.50
12	01009775	Hydro Wheel Motor Spacer
13	02000401	Extension Spring, .74 x 2.7 x .075
14	02000841	Socket Cap Screw, ¼-20 x .750
15	02001160	Elbow Fitting, 9⁄16 x ½
16	02001169	Pump Fan Shroud
17	02001179	Pump Moter Hose Assembly
18	02001715	Hydro Adapter, 8 x 10
19	02001872P	Pilot Hydro Hose Assembly
20	02002003	Elbow Hydro Adapter, 8 x 8
21	02002257	Hydro Filter
22	02002392	Hose Clamp
23	02003381P	RH Hydro Pump
24	02005160	Fitting, ¾ x ½
25	680-00056-0637	Hydro Tank Assembly
26	680-00059-0637	Wide Motor Frame
27	703-07750	Brake Cable Bracket
28	710-3005	Hex Screw, ⅜-16 x 1.25
29	712-3083	Hex Lock Nut, ½-13
30	918-04710	LH Hydro Pump
31	918-04717	LH Hydro Motor w/ Brake
32	918-04718	RH Hydro Motor w/ Brake
33	727-04284	Hose Assy. (Wheel Pump-Manifold)
34	756-04381	Pulley

Control Group

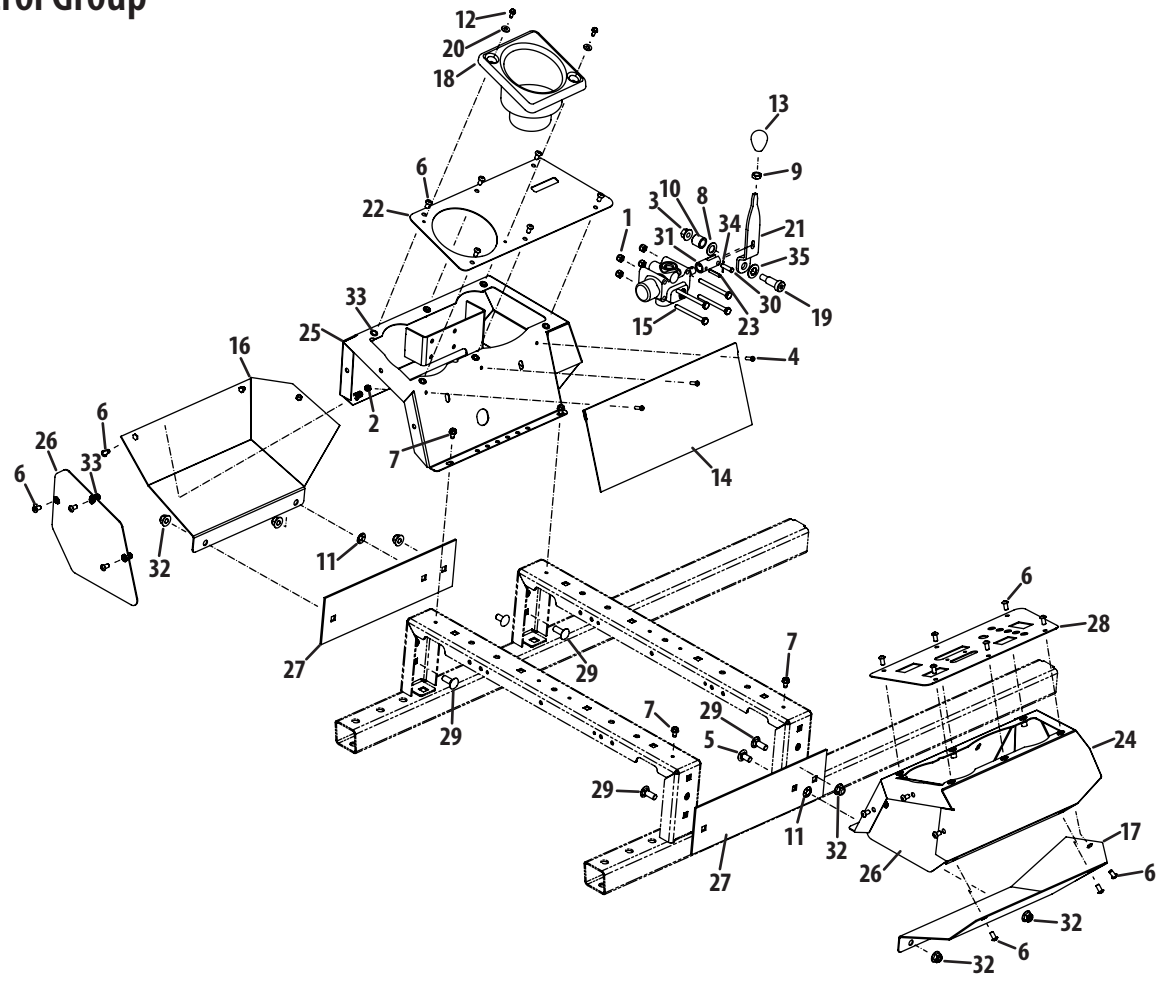

Ref.	Part Number	Description
1	00012152	Nut, ¼-20
2	00014608	Nut, #10-32
3	00022560	Flange Counter Lock Nut, ⅜-16
4	00030906	Machine Screw, #10-32 x .625
5	710-3178	Carriage Bolt, ⅜-16 x .75
6	710-3256	Cap Screw, ¼-20 x .500
7	710-0599	Hex Flange Screw, ¼-20 x .500
8	936-0160	Washer, .536 x .930 x .050
9	01002511	Jam Nut, ⅜-16
10	01004546	Spacer, .500 x .750 x .700
11	01008225	Push Nut, .335 x .780 x .015
12	01008531P	Flange Screw, #10-32 x .500
13	01009369	Lever Knob, ⅜-16
14	02000362	Debris/Storage Bag
15	02000925	Hex Screw, ¼-20 x 2.75
16	02002785-4021	LH Lower Panel
17	02002786-4021	RH Lower Panel
18	02002874	Cup Holder

Ref.	Part Number	Description
19	02003603	Shoulder Bolt, ⅜-16 x .50 x 1.0
20	02003725	Washer, .300 x .550 x .047
21	02004138-0637	Lift Valve Lever Bracket
22	02004142-4021	LH Cover Control Plate
23	02004622	Spiral Pin, 3⁄16 x 1.0
24	680-00119-4021	RH Control Panel Assembly
25	680-00121-4021	LH Bracket Control Panel Assembly
26	703-07328-4021	Rear Panel Plate
27	703-07330-0637	Lower Side Panel
28	703-07603-4021	RH Cover Control Plate
29	710-3168	Carriage Bolt, ⅜-16 x 1.00
30	711-04214	Pin, .25 x .9375
31	711-1614	Valve Link
32	712-04065	Flange Lock Nut, ⅜-16
33	712-04199	Rivet Nut, ¼-20
34	714-0127	Cotter Pin, 1⁄16 x .75
35	936-0253	Bell Washer, .525 x 1.00 x .050

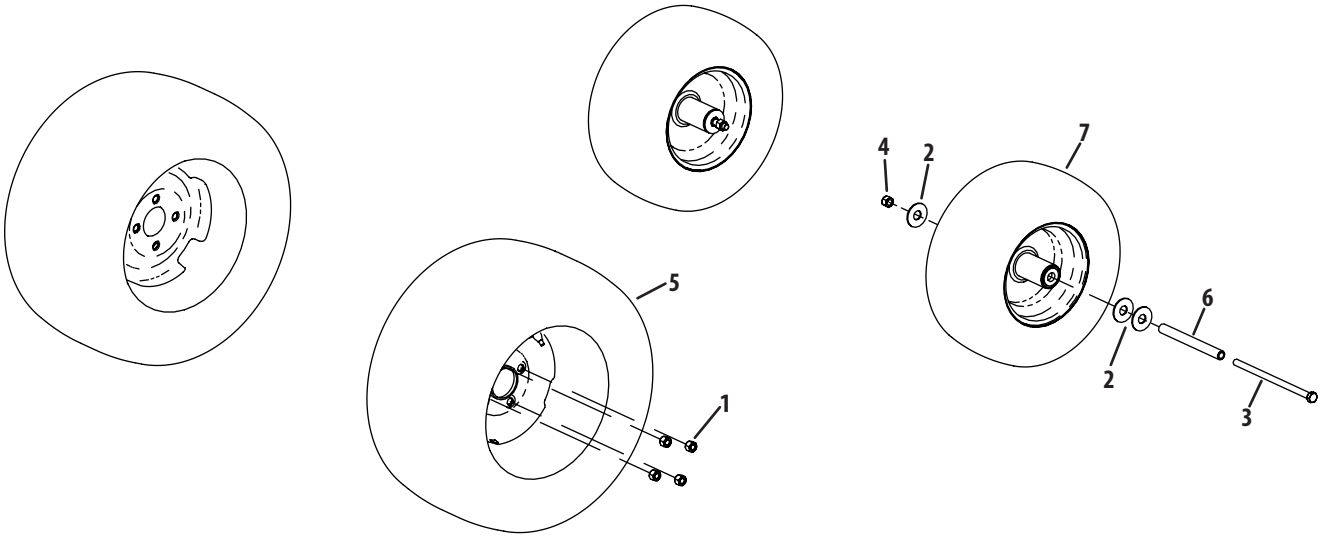

Ref.	Part Number	Description
1	00012187	Lug Nut, ½-20
2	736-3014	Washer, .781 x 2.00 x .105
3	01009288	Hex Screw, ½-20 x 9.50
4	02002299	Nut, ½-20, Lock
5	02002668	Wheel Assembly, 24 x 12.00-12
6	02003355	Spacer, .51 x .75 x 7.49
7	02003396	Front Wheel Assembly, 16 x 6.50-8

Electrical

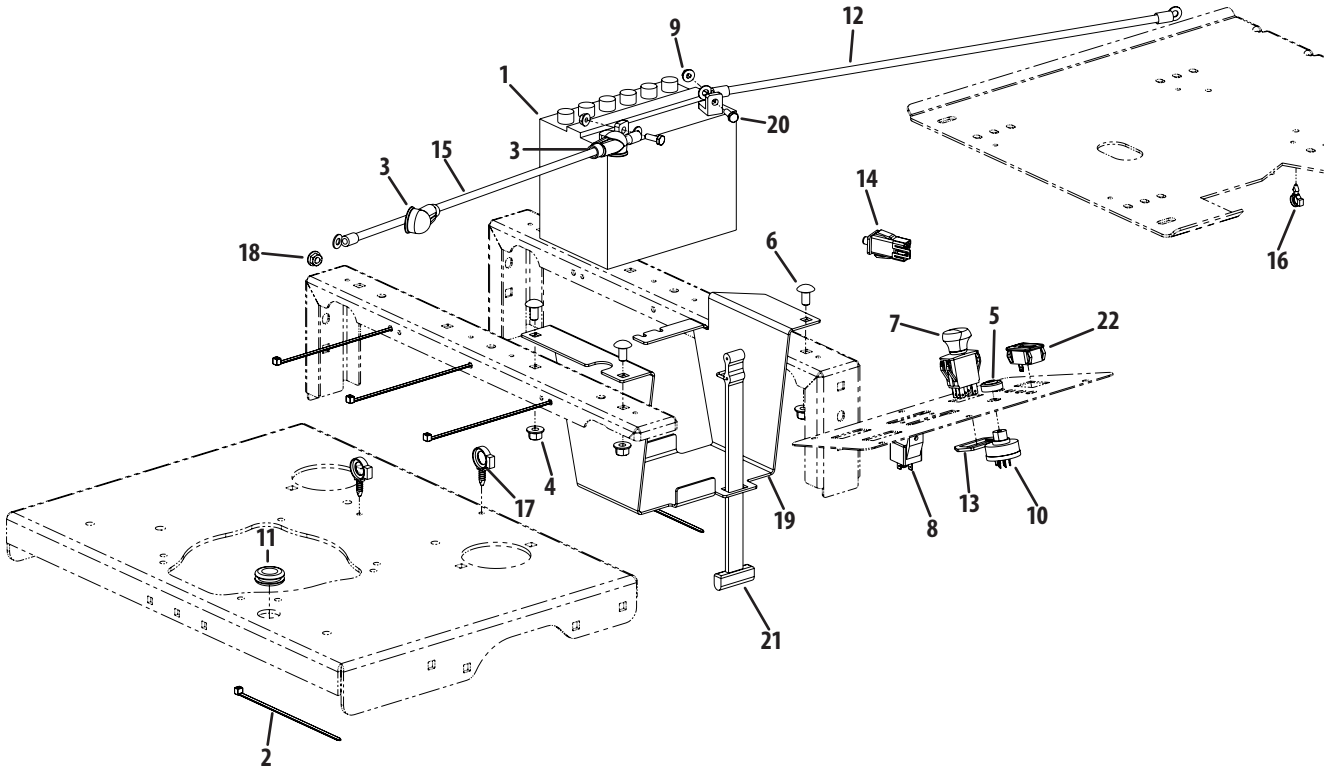

Ref.	Part Number	Description
1	925-1707D	Battery
2	725-0157	Cable Tie
3	00013258	Boot Terminal, 1.00 x 2.50
4	00022560	Flange Counter Lock, ⅜-16
5	00032097	Ingnition Nut w/ Cap, ⅝-32
6	710-3178	Carriage Bolt, ⅜-16 x .75
7	01002111	PTO Switch
8	01002251	Relay
9	912-3027	Flange Top Lock Nut, ¼-20
10	01003581P	Ignition Switch
11	01004040	Grommet, .75
12	01009623	Batter Cable
13	01009905	PTO Switch Bracket
14	02000024P	Switch

Ref.	Part Number	Description
15	02002059	Battery Cable
16	02003038	Electric CDT Clip, ⅜
17	02003775	Electric CDT Clip, ⅝
18	02003984	Flange Nut, M8-1.25
19	02004355	Battery Bracket
20	710-3015	Hex Screw, ¼-20 x .75
21	723-3064	Battery Strap
22	925-04893	Hour Meter
NS	01001811	Hour Meter Harness
NS	02002822	Wiring Harness
NS	02002824	Wiring Harness
NS	02004924	Fan Wiring Adapter
NS	02004925	Grammer Seat Adapter Harness
NS	629-04164	Lock Switch Wire Harness Assembly

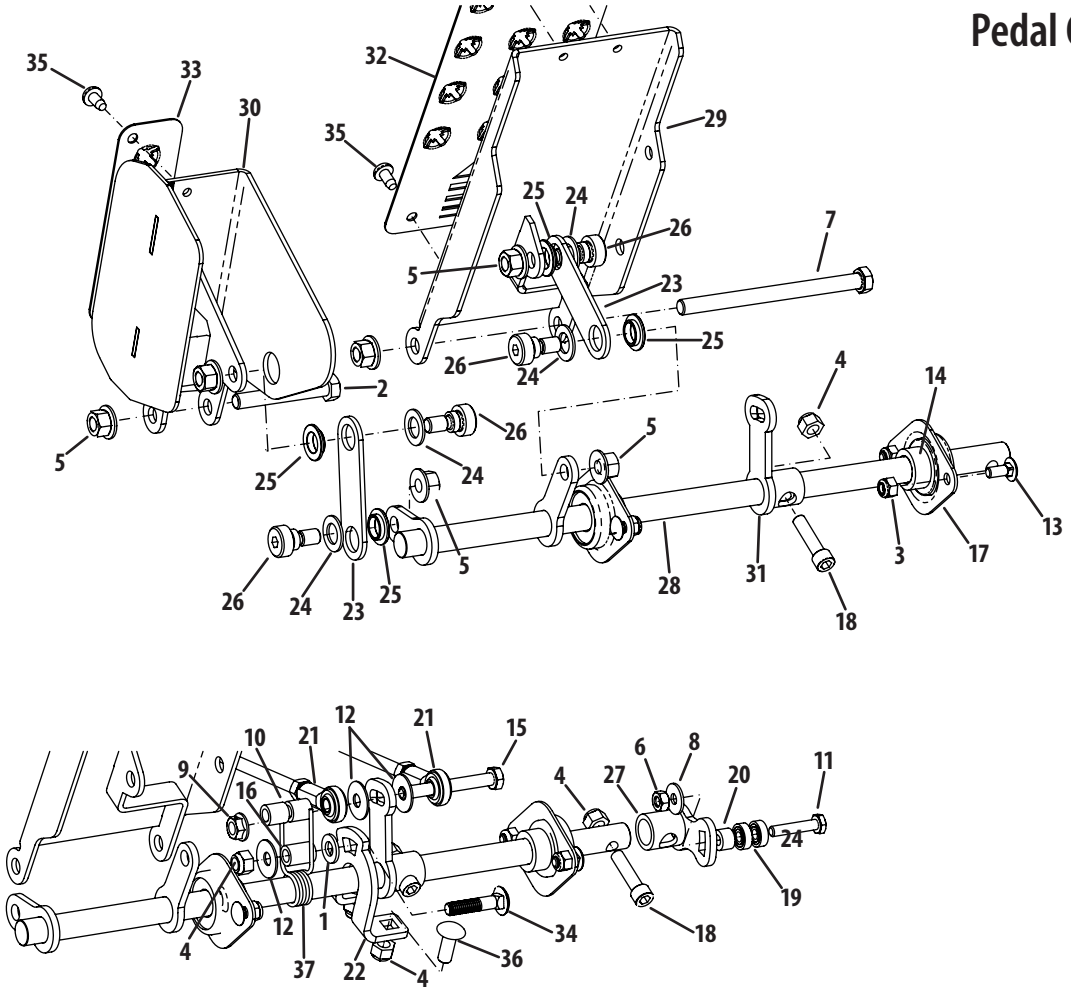

Ref.	Part Number	Description
1	00009812	Washer, .344 x .688 x .063
2	00011861	Hex Screw, ⅜-16 x 2.50
3	00012152	Nut, ¼-20
4	00012165	Nut, 5⁄16-18
5	00022560	Flange Counter Lock Nut, ⅜-16
6	00023041	Counter Lock Nut, ¼-20
7	00034167	Hex Screw, ⅜-16 x 5.00
8	01000489	Bell Washer, .265 x .75 x .062
9	712-3004A	Flange Counter Lock Nut, 5⁄16-18
10	01000799	Spacer, .315 x .500 x .520
11	01000913	Hex Screw, ¼-20 x 1.25
12	936-0425	Bell Washer, .325 x .930 x .045
13	01001160	Carriage Bolt, ¼-20 x .620
14	01006350	Shaft Collar, .625 x 1.00 x .438
15	01007122P	Hex Screw, 5⁄16-18 x 2.50
16	01007984	Spacer, .315 x .500 x .699
17	02000487	Flange Bearing
18	02002994	Screw, 5⁄16-18 x 1.25
19	02003377	Ball Bearing, .25 x .625 x .196

Ref.	Part Number	Description
20	02005057	Spacer, .256 x .500 x .330
21	02005464	Speed Control Link Assembly
22	02005547	Bracket
23	02005550	Pedal Control Link
24	02005560	Washer, .51 x .88 x .06
25	02005568	Flange Bearing, .502 x .875 x .180
26	02005570	Shoulder Bolt, ⅜-16 x .50 x .25
27	02005629	Lockout Hub Assembly
28	680-00103	Pedal Bellcrank Assembly
29	680-00132-0637	Forward Pedal Assembly
30	680-00133-0637	Reverse Pedal Assembly
31	680-00135	Control Arm Assembly
32	703-07763	Forward Pedal Grip
33	703-07764	Reverse Pedal Grip
34	710-0262	Carriage Bolt, 5⁄16-18 x 1.50
35	710-05070	Screw, ¼-20 x .5
36	02003264	Carriage Bolt, 5⁄16-18 x .88
37	732-04721A	Torsion Spring, .66 x .56

Control Assembly

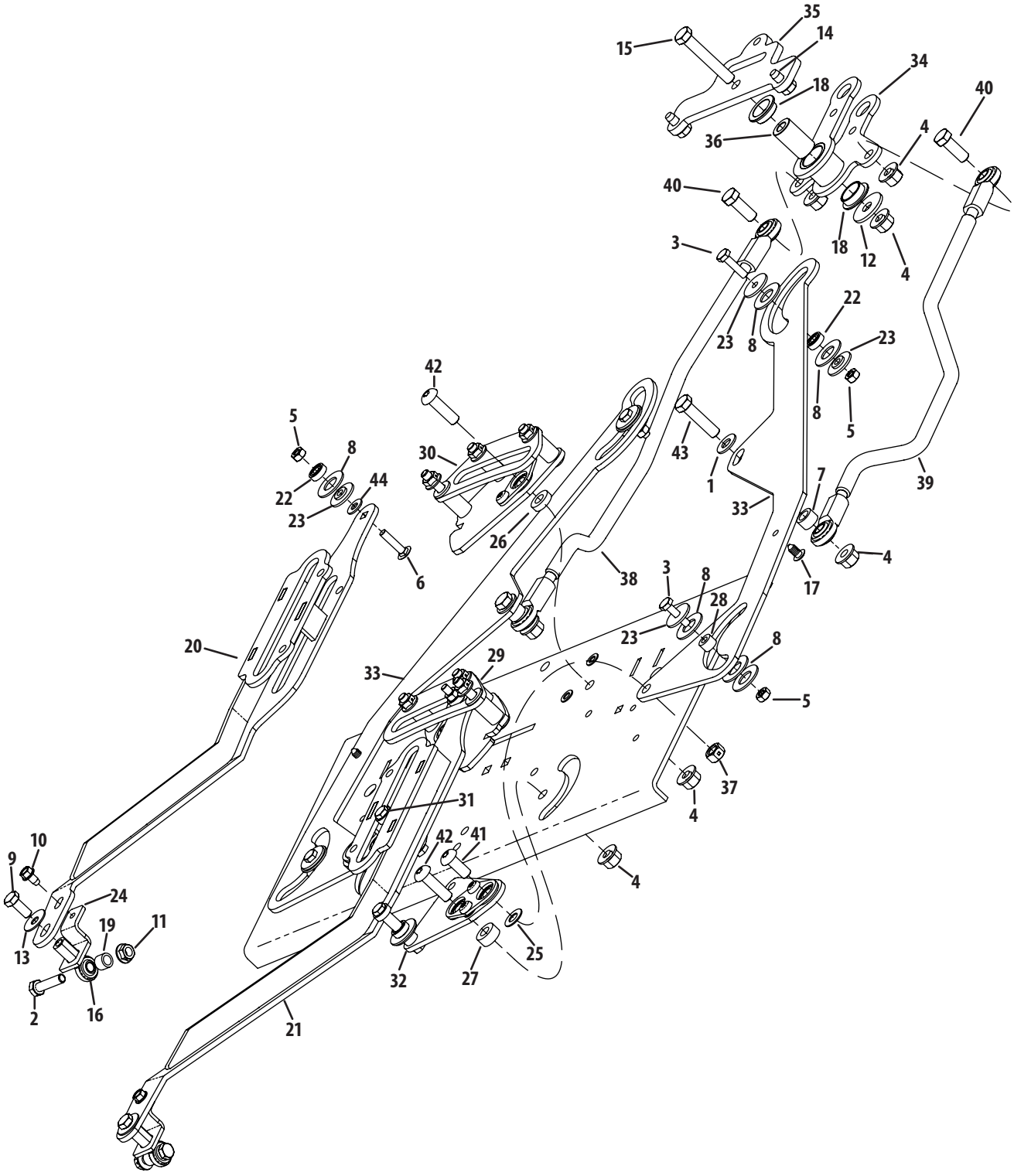

Ref.	Part Number	Description
1	00012158	Washer, .406 x .813 x .063
2	00013116	Hex Screw, 5/16-18 x 1.25
3	00013416	Hex Screw, 1/4-20 x 1.00
4	00022560	Flange Counter Lock Nut, 3/8-16
5	00023041	Counter Lock Nut, 1/4-20
6	00031602	Carriage Bolt, 1/4-20 x 1.00
7	00081551	Spacer, .407 x .625 x .375
8	01000101	Washer, .550 x 1.25 x .068
9	01000627	Hex Screw, 5/16-24 x .750
10	710-0599	Hex Flange Screw, 1/4-20 x .500
11	712-3004A	Flange Counter Lock Nut, 5/16-18
12	936-0133	Washer, .411 x 1.25 x 1.00
13	936-0425	Bell Washer, .325 x .930 x .045
14	710-1260A	TT Screw, 5/16-18 x .750
15	01001366	Hex Screw, 3/8-16 x 2.25
16	01008410P	Rod End, 5/16
17	01008801	Nylon Rivet, 1/4 x .625
18	02003163	Flange Bearing, .752 x 1.25 x .305
19	02003170	Spacer, .344 x .500 x .375
20	02003327	RH Pump Control Bracket Assy.
21	02003330	LH Pump Control Bracket Assy.
22	02003377	Ball Bearing, .25 x .625 x .196

Ref.	Part Number	Description
23	02003379	Shoulder Spacer, .251 x 1.00 x .06
24	02003384	Rod Support End Bracket
25	02005054	Spacer, .381 x .750 x .040
26	02005055	Spacer, .381 x .75 x .150
27	02005056	Spacer, .381 x .750 x .312
28	02005057	Spacer, .256 x .500 x .330
29	02005290	LH Speed Control Cam Assembly
30	02005291	RH Speed Control Cam Assembly
31	02005292	LH Steering Pivot Assembly
32	02005293	RH Steering Pivot Assembly
33	02005463	Control Link Plate
34	02005468	Front Steering Pivot Assembly
35	02005482	Steering Pivot Mount Plate
36	02005483	Spacer, .385 x .750 x 1.28
37	02005566	Counter Lock Nut, 3/8-16
38	603-04618	LH Control Rod Assembly
39	603-04619	RH Control Rod Assembly
40	710-0514	Hex Screw, 3/8-16 x 1.00
41	710-05142	Screw, 3/8-16 x .875
42	710-05143	Screw, 3/8-16 x .1.25
43	710-0520	Hex Screw, 3/8-16 x 1.50
44	936-0463	Flat Washer, .25 x .630 x .0515

Front Axle Assembly

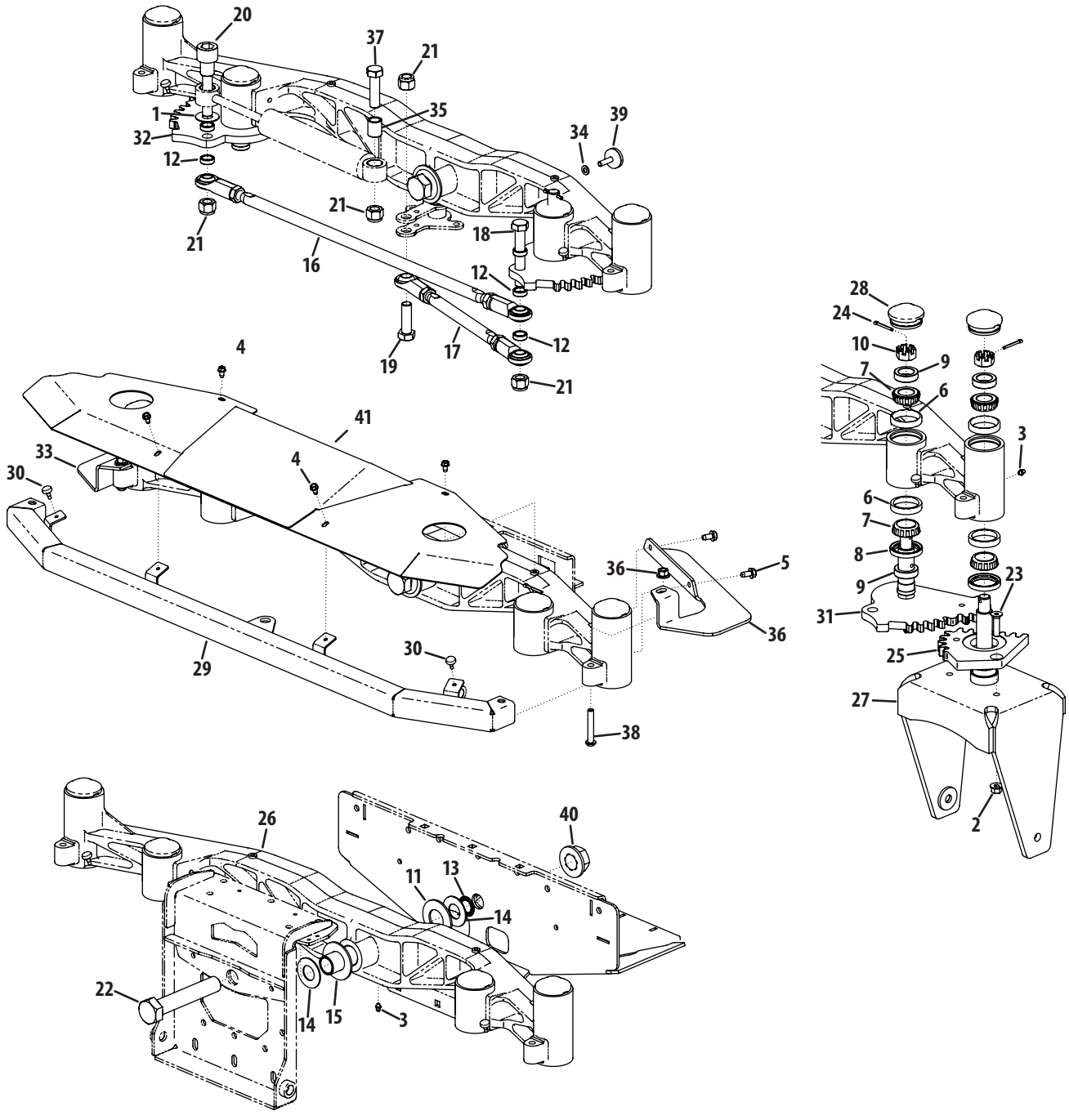

Ref.	Part Number	Description
1	00002766	Washer, .655 x 1.5 x .055
2	00022560	Flange Counter Lock Nut, ⅜-16
3	00060078	Grease Fitting, ¼-28
4	710-0599	Hex Flange Screw, ¼-20 x .500
5	01001161	Flange Screw, 5⁄16-18 x .625
6	01002620	Bearing Cup, L44610
7	01002621	Cone Bearing, L44643
8	01002622	Seal, 14858
9	01002624	Seal Ring
10	712-0359	Slot Nut, ¾-16
11	01006294	Bell Washer, 1.25 x 2.50 x .180
12	01008404P	Spacer, .635 x .880 x .312
13	01009997	Self-Lock External Retainer
14	02000588	Washer, 1.00 x 2.00 x .075
15	02000589	Spacer, 1.00 x 1.25 x 3.47
16	02003187	Tie Rod Assembly, ½-20 x 28
17	02003217	Tie Rod Assembly, ⅝-18 x 14
18	02003220	Hex Screw, ⅝-11 x 4.00
19	02003222	Hex Screw, ⅝-11 x 1.75
20	02003357	Shoulder Bolt, .872 x 1.030 x 2.88
21	712-3016	Hex Lock Nut, ⅝-11

Ref.	Part Number	Description
22	02003804	Hex Screw, 1-14 x 5.5
23	02005073	Hex Screw, ⅜-16 x 1.50
24	714-0162	Cotter Pin, 5⁄32 x 1.25
25	717-04729	Yoke Steering Gear
26	719-04517	Axle
27	603-04645A-0637	Yoke Assembly
28	731-07348	Axle Grease Cap
29	680-00072-0637	Axle Bumper Assembly
30	935-0199A	Rubber Bumper, .62 x .22
31	680-00074	LH Steering Gear Assembly
32	680-00075	RH Steering Gear Assembly
33	703-07259	RH Gear Cover Plate
34	936-0119	Lock Washer, 5⁄16
35	750-05335	Spacer, .635 x .875 x 1.031
36	703-07471	LH Gear Cover Plate
37	710-05000	Hex Screw, ⅝-11 x 2.25
38	710-05066	Screw, ⅜-16 x 2.25
39	710-05068	Adjustable Skid Shoe
40	712-04191	Flange Top Lock Nut, 1.0-14
41	680-00073-4021	Axle Cover Assembly

Steering Column

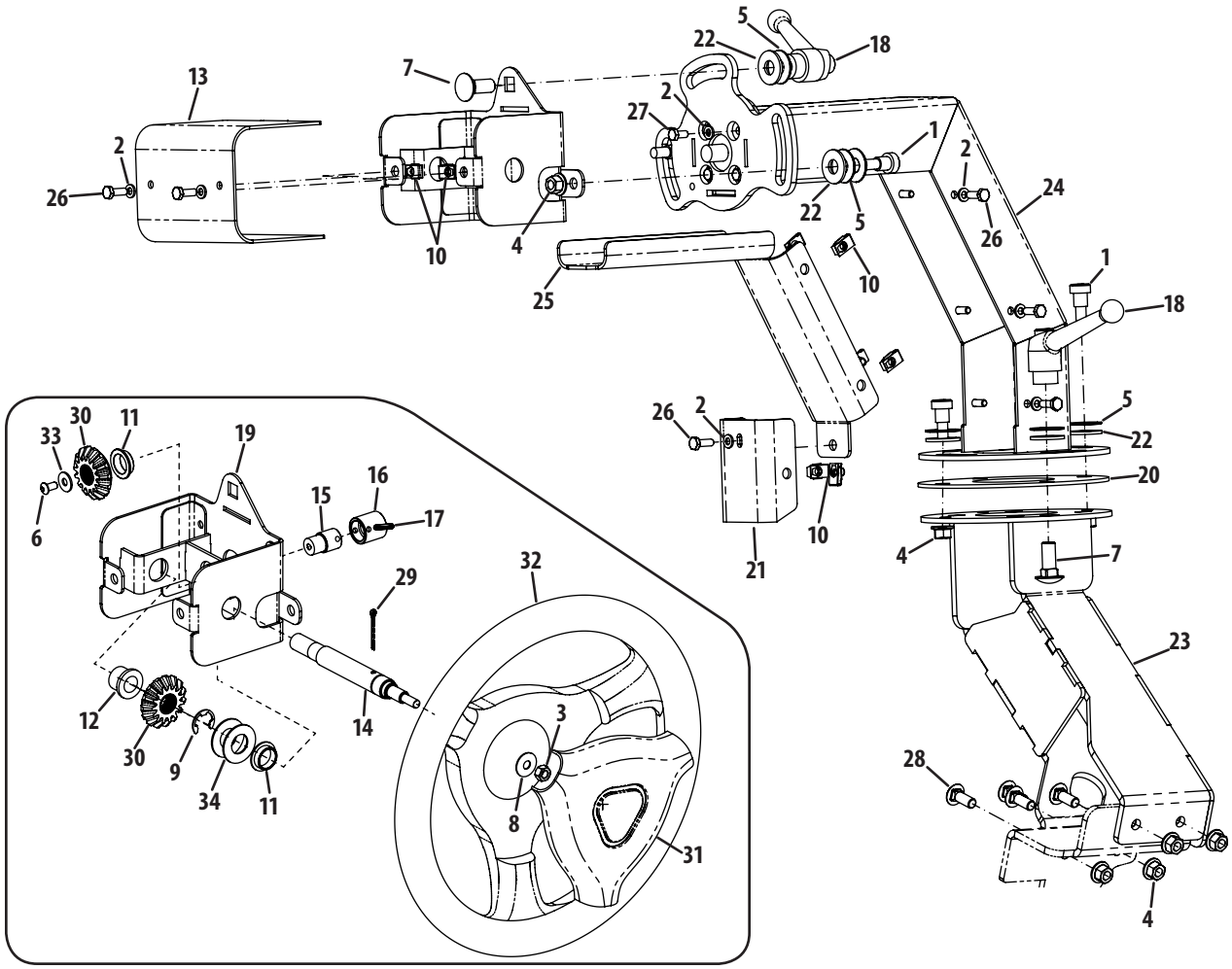

Ref.	Part Number	Description
1	00011450	Shoulder Bolt, ⅜-16 x .495 x .500
2	936-0329	Lock Washer, .250 x .489 x .110
3	912-3057	Nut, 5⁄16-24
4	00022560	Flange Counter Lock Nut, ⅜-16
5	00070022	Washer, .533 x 1.25 x .058
6	710-3256	Screw, ¼-20 x .500
7	01000517	Carriage Bolt, ½-13 x 1.25
8	936-0425	Bell Washer, .325 x .930 x .045
9	01003994	Retainer Clip
10	01008539P	U-Nut, ¼-20
11	02003163	Flange Bearing, .752 x 1.25 x .305
12	02004002	Flange Slv. Bearing, .630 x .875 x .75
13	02004107-0637	Box Steering Cover
14	02004109	Steering Shaft
15	02004110	Valve Steering Shaft
16	02004308	Steering Valve Spline Hub
17	02004622	Spirol Pin, 3⁄16 x 1.0

Ref.	Part Number	Description
18	02005058	Steering Adjust/Lock Lever
19	02005378-0637	Steering Box Housing Assembly
20	02005396	Wear Swing Plate
21	02005495	Steering Column Cover
22	02005512	Washer, .531 x 1.250 x .100
23	680-00082	Base Column Assembly
24	680-00093	Upper Steering Column Assembly
25	703-07470	Upper Steering Column Cover
26	710-3015	Hex Screw, ¼-20 x .75
27	710-3140	Hex Screw, M6-1.00 x 14
28	710-3168	Carriage Bolt, ⅜-16 x 1.00
29	914-0470	Cotter Pin, ⅛ x 1.25
30	917-1019	Splined Bore Miter Gear
31	731-06459	Steering Wheel Cover
32	731-3209	Steering Wheel
33	736-0173	Flat Washer, .28 x .74 x .063
34	736-0188	Flat Washer, .76 x 1.49 x .06

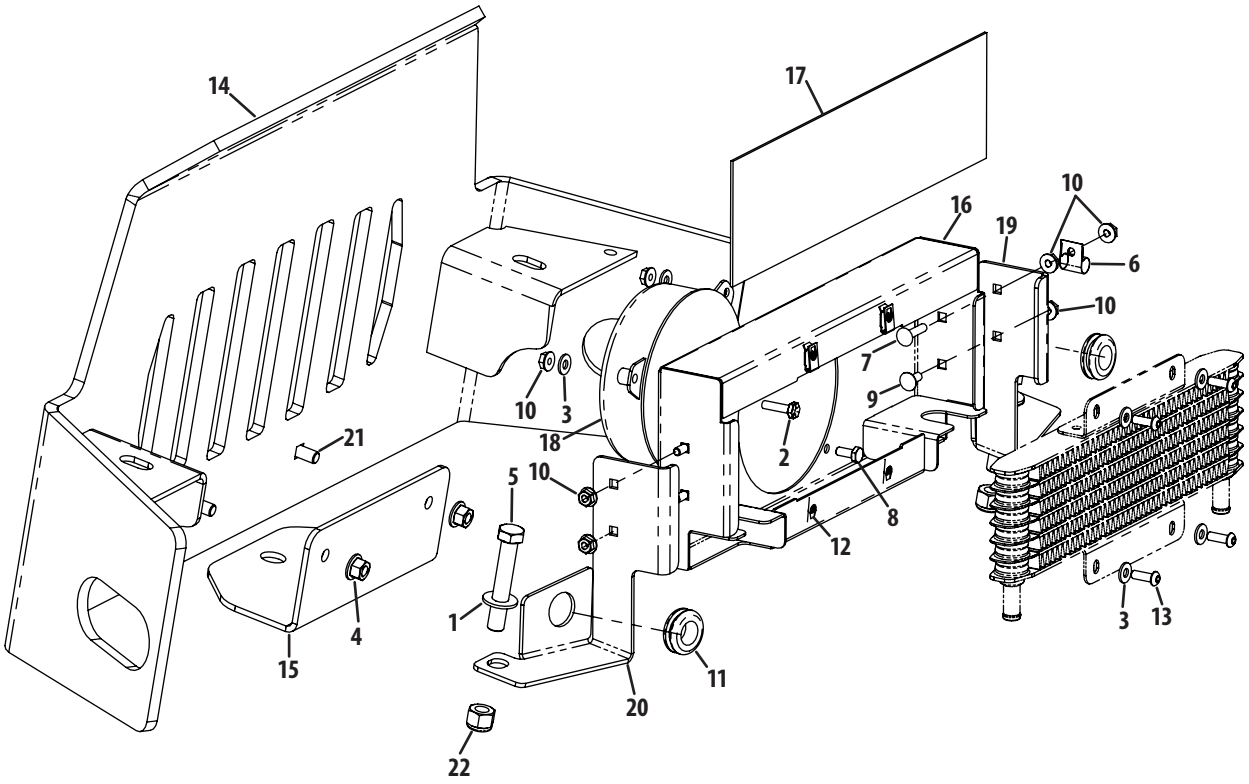

Ref.	Part Number	Description
1	00010958	Washer, ½
2	00011447	Capscrew, ¼-20 x 1.00
3	00012154	Washer, ¼
4	00022560	Flange Lock Nut, ⅜-16
5	00030046	HHCS, ½-13, 3.00
6	00031081	Clamp, ½
7	00031602	Carriage Bolt, ¼-20 x 1.00
8	710-0751	Hex Screw, ¼-20 x .620
9	01001160	Carriage Screw, ¼-20 x .62
10	912-3027	Nut, ¼-20, Hex Flange Lock
11	01004040	Grommet, .75 ID

Ref.	Part Number	Description
12	01008539P	U-Nut, ¼-20
13	01009362	Capscrew, ¼-20 x .750
14	680-00079-4021	Bumper Assembly
15	02004120-0637	Hitch Bracket
16	02004473-0637	Heat Exchanger Assembly
17	02004480	Heat Exchanger Screen
18	02004481	Fan
19	703-07361-0637	Cooler Mounting Bracket, LH
20	703-07360-0637	Cooler Mounting Bracket, RH
21	710-3168	Carriage Bolt, ⅜-16 x 1.00
22	712-3083	Hex Nut, ½-13, Insert Lock

Brake Pedal Assembly

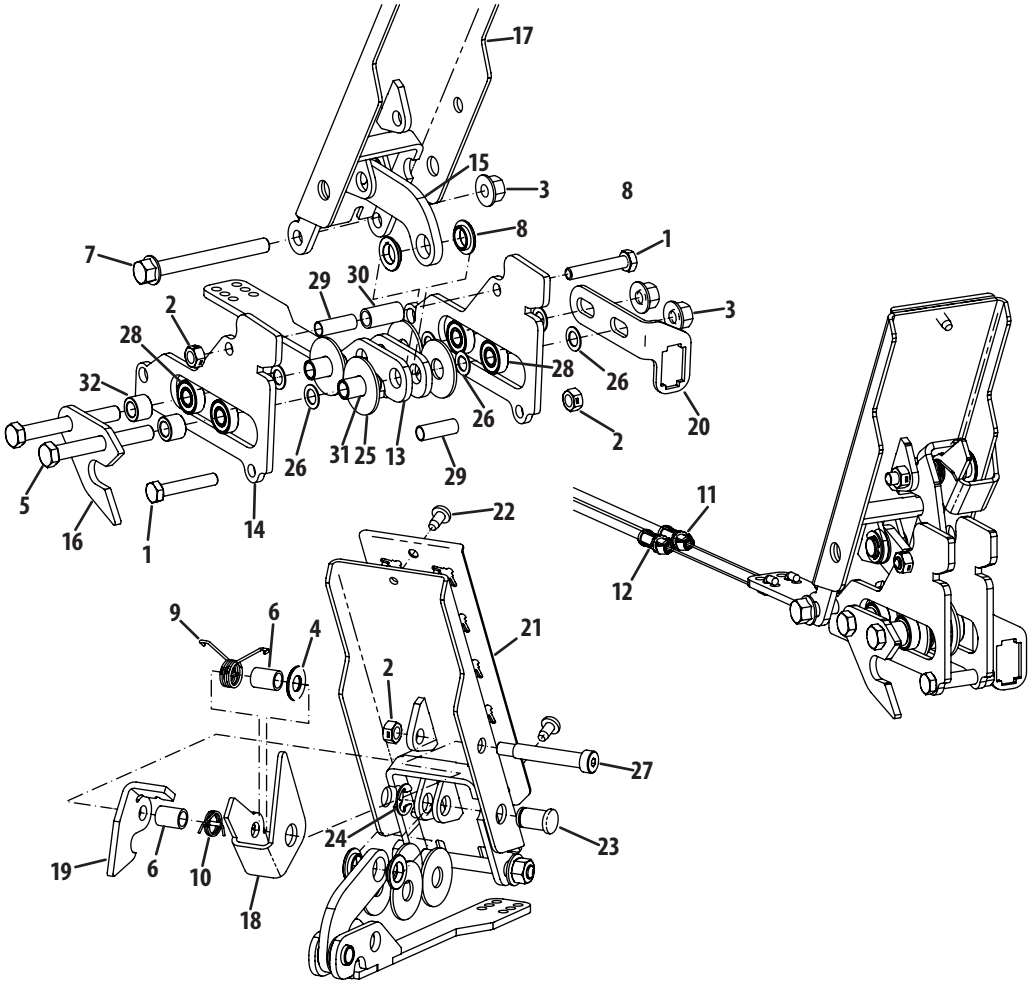

Ref.	Part Number	Description
1	00006129	Hex Screw, 5/16-18 x 1.75
2	00022547	Counter Lock Nut, 5/16-18
3	00022560	Flange Counter Lock Nut, 3/8-16
4	00061053	Washer, .416 x .875 x .046
5	01004127	Hex Screw, 3/8-16 x 3.00
6	02003436	Spacer, .380 x .500 x .667
7	02003666	Hex Screw, 3/8-16 x 3.50
8	02005568	Flange Bearing, .502 x .875 x .180
9	02005591	Torsion Spring
10	02005592	Torsion Spring
11	02005606P	LH Brake Cable
12	02005607P	RH Brake Cable
13	02005612-0637	Brake Carrier Assembly
14	02005703	Brake Roller Guide Bracket
15	02005714	Brake Control Link
16	02005718	Lockout Plate
17	603-04639	Brake Pedal Assembly
18	703-06762	Park Engagement Bracket
19	703-06766	Brake Hook Bracket
20	703-06975	Brake Switch Mount Bracket
21	703-07762	Brake Pedal Grip
22	710-05070	Screw, 1/4-20 x .5
23	711-05058	Pin, .500 x .804
24	916-0104	E-Ring
25	736-04407	Flat Washer, .531 x 1.5 x .08
26	736-04418	Washer, .39 x .62 x .03
27	738-04360	Shoulder Screw, 5/16-18 x .375 x 2.00
28	741-04371	Bearing, .375 x .875
29	750-05071	Spacer, .319 x .375 x 1.056
30	750-05072	Spacer, .384 x .500 x 1.000
31	750-05178	Spacer, .38 x .5 x .955
32	750-05180	Spacer, .385 x .625 x .458

Deck Lift Assembly

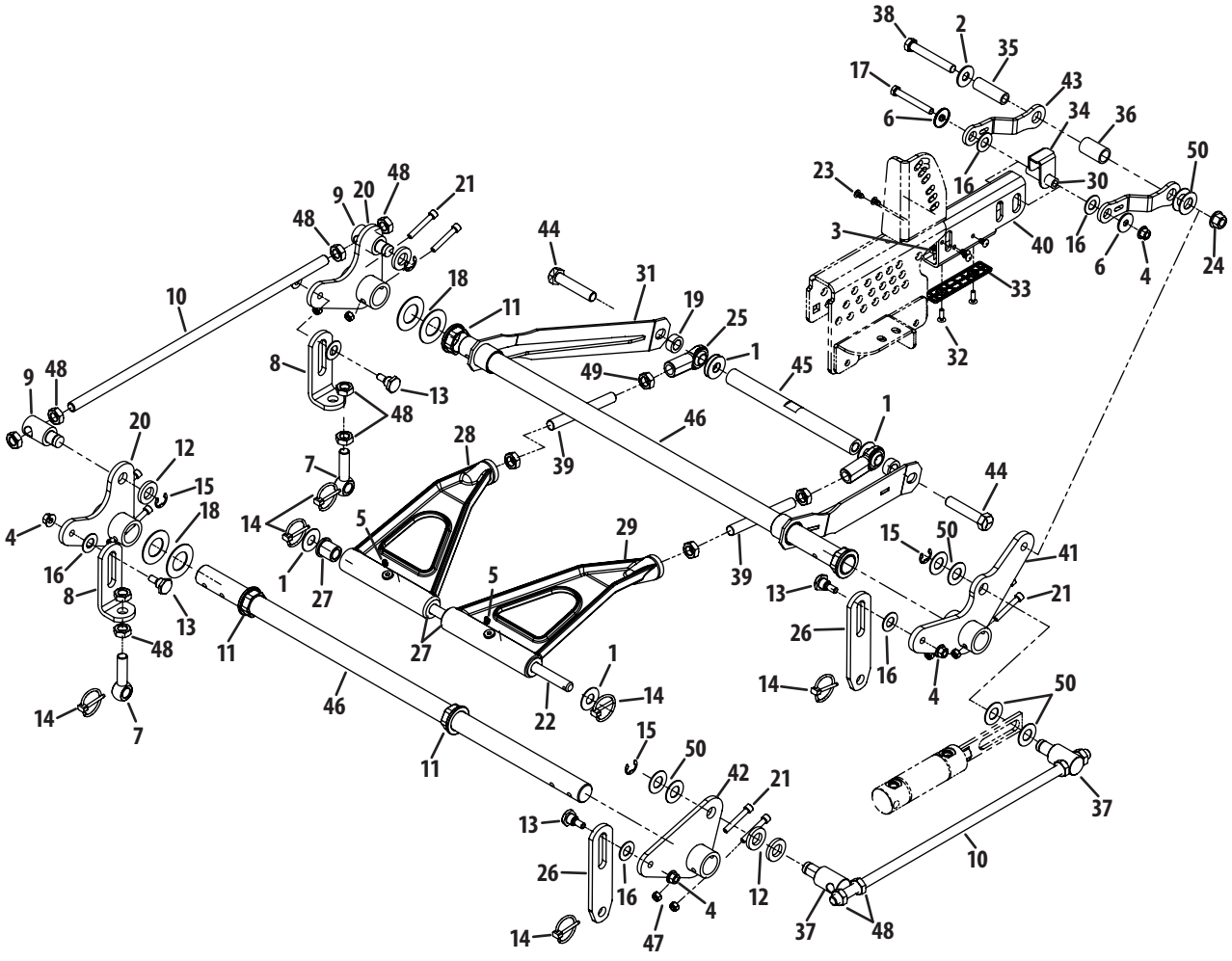

Ref.	Part Number	Description
1	00002766	Washer, .655 x 1.5 x .055
2	00011459	Washer, .563 x 1.38 x .109
3	00012152	Nut, ¼-20
4	00022560	Flg. Cnter. Lock Nut, ⅜-16
5	00060078	Grease Fitting, ¼-28
6	936-0133	Washer, .411 x 1.25 x 1.00
7	01001744	Eye Bolt, ⅝-16 x 2.63
8	01001746-0637	Eye Bolt Link, ⅝
9	01001855	Lift Ferrule
10	01001857	Lift Connecting Rod
11	01001930	Hex Flange Bearing
12	01003123	Spacer, .812 x 1.47 x .218
13	01003535	Shoulder Bolt, ⅜-16 x .625 x .437
14	01003993	Lynch Pin, 3⁄16 x 1.25
15	01003994	Retainer Clip
16	01004003	Washer
17	01004127	Hex Screw, ⅜-16 x 3.00
18	01006408	Washer, 1.25 x 2.25 x .075
19	01007527	Spacer, .630 x 1.06 x .440
20	01007680-0637	Assembly Bellcrank
21	01007962	Screw, 5⁄16-18 x 2.0
22	01008453	Deck Lift Link Rod (60″ Deck)
—	01007544	Deck Lift Link Rod (72″ Deck)
23	01008801	Rivet, ¼ x .625
24	01010119	Flange Top Lock Nut, ½-13
25	02000293	RH Rod End, ⅝

Ref.	Part Number	Description
26	02000561-0637	Deck Lift Link
27	02002384	Flange Bearing
28	02002708	LH Lift Link Cstg.
29	02002709	RH Lift Link Cstg.
30	02003043	Spacer, .375 x .625 x 2.20
31	02003257	Front Frame Support Assembly
32	02003505	Flat Head Screw, ¼-20 x .750
33	02003749	Wear Plate, 1.125 x 5.0
34	02003942-0637	Lock Bracket
35	02003944	Spacer, .510 x .750 x 2.38
36	02003945	Spacer, .765 x 1.00 x 1.70
37	02004280	Lift Ferrule, 1.938
38	02004518	Hex Screw, ½-13 x 3.5
39	02004692	Rod, ⅝-18 x 5.5 (60″ Deck)
—	02004691	Rod, ⅝-18 x 3.5 (72″ Deck)
40	02005103-0637	Tube, 3.0 x 1.5
41	02005350-0637	Hydro Assist Bellcrank
42	02005352-0637	Lift Bellcrank Assembly
43	02005354-0637	Loft Offset Yoke Bracket
44	710-04813	Hex Screw, ⅝-11 x 3.00
45	711-05072	Front Lift Link Mount Shaft
46	711-05216	Deck Lift Shaft
47	912-0429	Hex Lock Nut, 5⁄16 -18
48	912-3015	Jam Nut, ⅝-11
49	712-3056	Jam Nut, ⅝-18
50	736-0188	Flat Washer, .76 x 1.49 x .06

Engine Accessories, 60" & 72" Deck

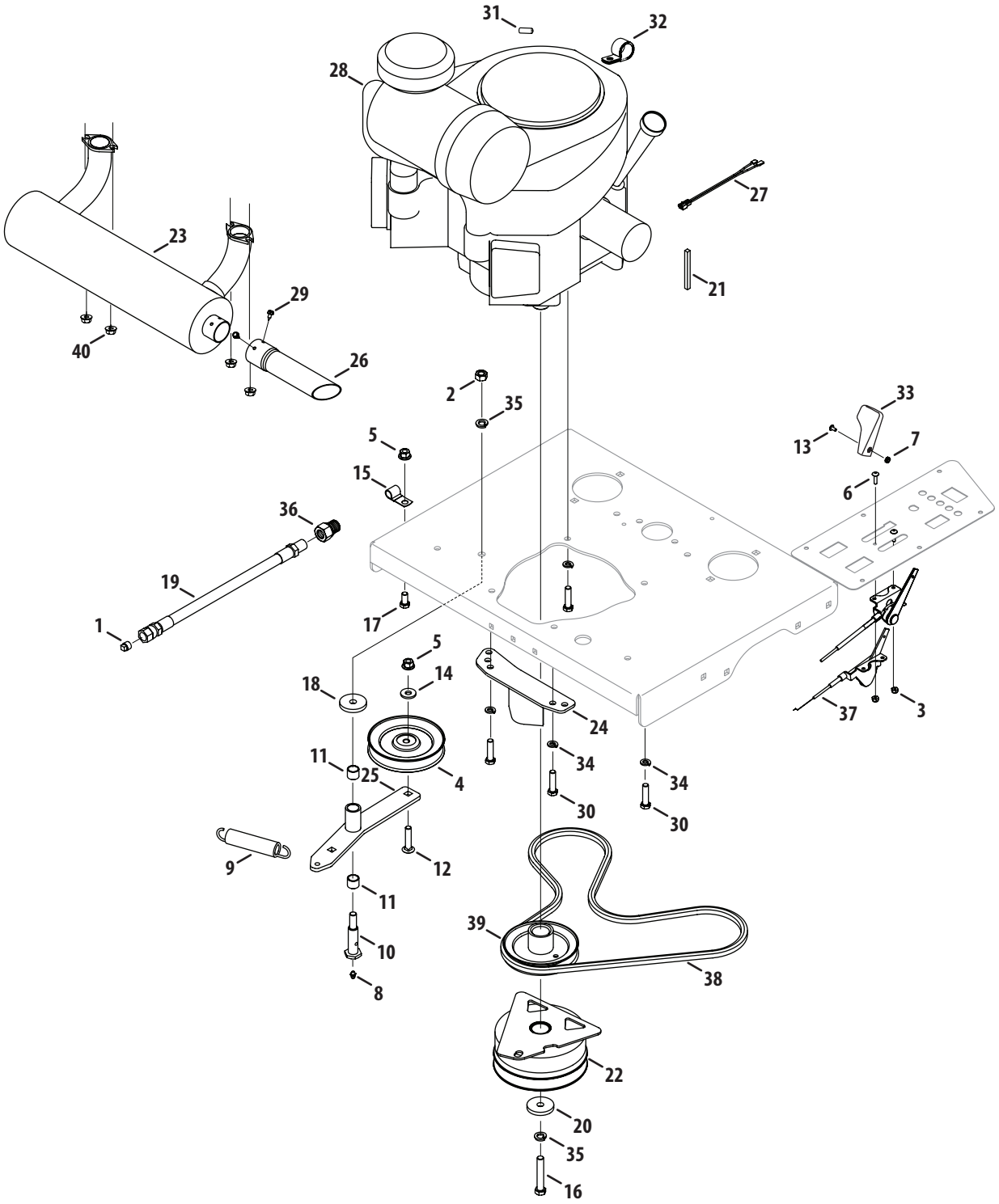

Ref.	Part Number	Description
1	737-04202	Pipe Plug, 3/8
2	912-3019	Nut, 7/16-14
3	00014608	Nut, #10-32
4	00021975	Idler
5	00022560	Flange Counterlock Nut, 3/8-16
6	00030906	Machine Screw, #10-32 x .625
7	00060056	Nut, #8-32
8	00060078	Grease Fitting, 1/4-28
9	01000199	Ext. Spring, 1.00 x 5.00 x .125 (60")
	01009635	Ext. Spring, .98 x 5.00 x .140 (72")
10	01000302	Shoulder Bolt, .625 x 1.95
11	01000308	Sleeve Bearing, .628 x.753 x .625
12	710-0560	Carriage Bolt, 3/8-18 x 1.75
13	710-3217	Machine Screw, #8-32 x .356
14	736-3052	Washer, .406 x 1.00 x .105
15	726-3008	J-Clip, .470 x 1.80
16	01001395	Hex Screw, 7/16-20 x 2.50
17	710-0216	Hex Screw, 3/8-16 x .750
18	01003269	Washer, .438 x 1.75 x .250
19	01003283	Oil Drain Hose
20	736-04131	Washer, .438 x 1.745 x .250
21	01005856	Key, .250 x .250 x 3.00
22	02002825	Brake Clutch

Ref.	Part Number	Description
23	02003201	Muffler (60")
	02003522	Muffler (72")
24	02003543-0637	Clutch Return Assembly
25	02004075	Engine Pulley Idler Arm Assembly
26	751-11235	Exhaust Pipe (60")
	751-11236	Exhaust Pipe (72")
27	629-04178	LPG Engine Harness Assembly
28	652PFX85200	Kawasaki FX850-S11 Engine (60")
	652PFX99900	Kawasaki FX1000-S09 Engine (72")
29	910-0224	Hex Washer Screw, #10-16 x .500
30	710-0520	Hex Screw, 3/8-16 x 1.50 (60")
	00010980	Hex Screw, 3/8-16 x 1.50 (72")
31	720-04155	Vinyl Cap, 1/4
32	726-0475	Clamp, 1.0
33	731-04914	Throttle Control Knob
34	936-0169	Lock Washer, 3/8
35	936-0171	Lock Washer, 7/16
36	737-04138	Fitting
37	746-04534	Throttle Cable (60")
	946-04571	Throttle Cable (72")
38	954-04233	Belt
39	756-04382	Pump Drive Pulley
40	02003984	Flg. Hx. Nut, M8-1.25

60" Deck

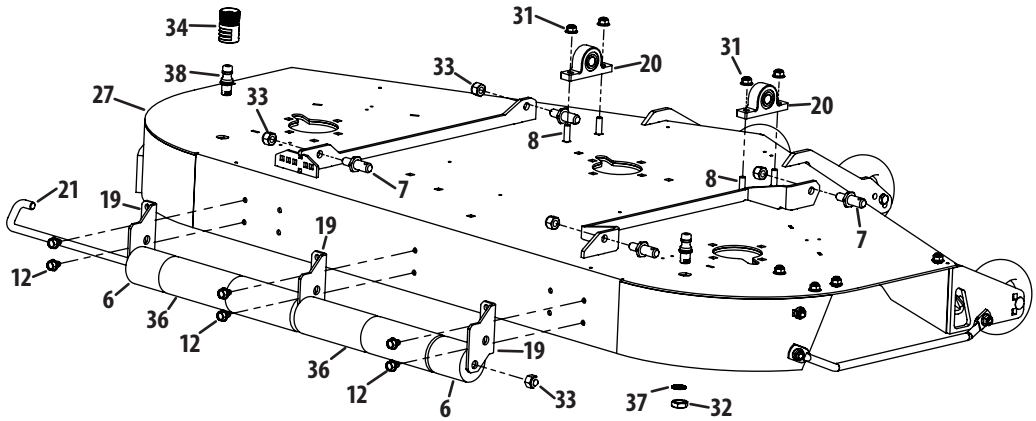
34
31
20
31
20
38
33
33
27
8
8
7
7
21
19
19
12
6
36
12
36
12
6
19
33
37
32

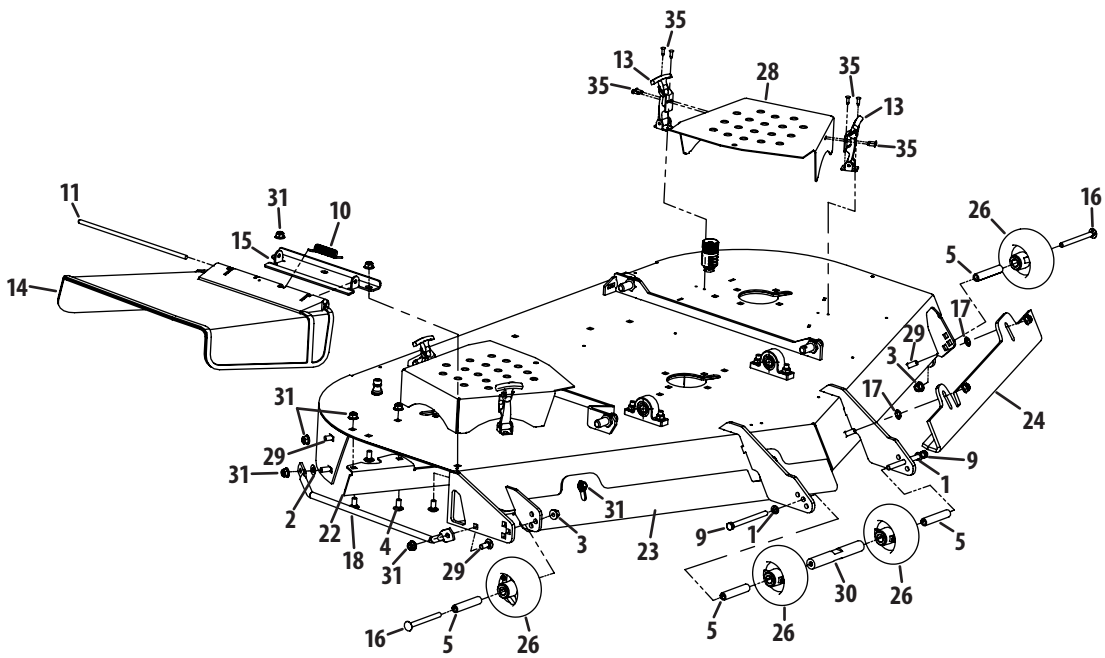
35
13
28
35
35
13
35
11
31
10
15
14
26
16
5
17
29
3
17
24
31
29
31
2
22
18
4
31
29
3
31
23
9
1
9
1
5
30
26
5
26
16
5
26

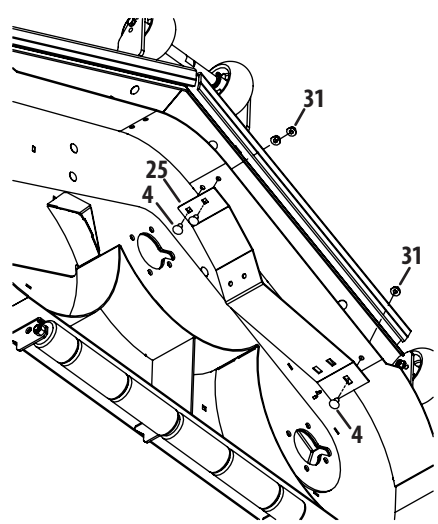
31
25
4
31
4

Ref.	Part Number	Description
1	936-0169	Lock Washer, ⅜
2	00012158	Washer, ⅜
3	00022560	Flange Lock Hex Nut, ⅜-16
4	710-3178	Carriage Bolt, ⅜-16 x .75
5	750-3193	Wheel Spacer
6	01001169	Grass Catcher Roller
7	01001745	Pin, ⅝ Dia. x 1.2
8	710-3034	Carriage Bolt, ⅜-16 x 1
9	710-0944	Hex Cap Screw, ⅜-16 x 4.50
10	732-04797	Torsion Spring
11	747-3384	Chute Deflector Rod
12	01004304	Hex Washer Screw, ⅜-16, .5
13	01005869P	T-Handle Latch Draw
14	01006693	Chute Deflector
15	01006748-0637	Chute Deflector Bracket
16	01008049	Carriage Bolt, ⅜-16 x 4.00
17	01008225	Push Retainer
18	01008644	Finger Guard
19	01008790-0637	Grass Catcher Roller Bracket
20	02000109	Pillow Block
21	02002800	J-Hook w/ Threaded Roller
22	02005195-0637	Chute Baffle
23	02005200-4021	Right Hand Front Adjustment Skirt
24	02005201-4021	Left Hand Front Adjustment Skirt
25	02005694-0637	Baffle, 60" Adjustment
26	634-3159	Complete Wheel, 5.00 Dia.
27	680-00117-0637	60" Deck Assembly
28	703-06871-4021	Deck Belt Cover
29	710-3168	Carriage Bolt, ⅜-16 x 1.00
30	711-05159	Ball Wheel Mounting Shaft
31	712-04065	Lock Nut, Nylon Insert, ⅜-16
32	912-0641	Hex Nut, M16-1.5
33	712-3083	Lock Nut, Nylon Insert, ½-13
34	921-04041	Water Nozzle Adaptor
35	728-04033	Pop Rivet, 3⁄16
36	731-3005	Front Roller
37	936-0760	Lock Washer, 17 x 23.8 x 1.95
38	737-04003D	Deck Water Nozzle

72" Deck

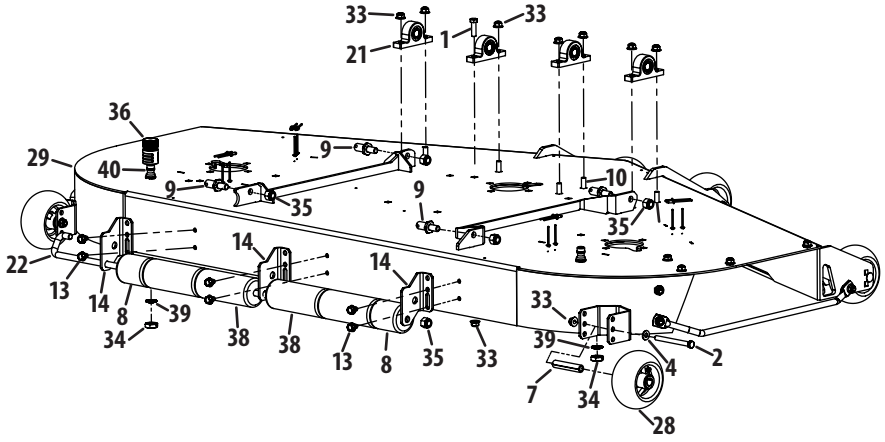
33
21
1
33
36
29
40
9
9
9
10
35
35
22
14
14
13
14
8
39
34
38
38
13
8
35
33
33
39
4
2
7
34
28

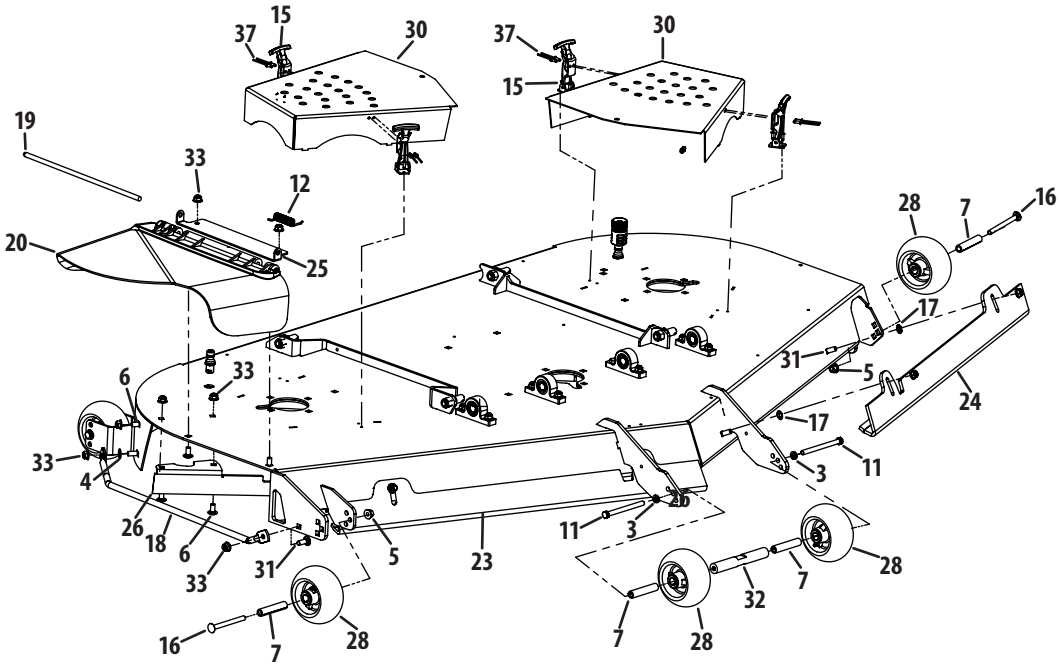
37
15
30
37
30
15
19
33
12
20
25
28
7
16
17
31
5
24
6
33
17
33
4
3
11
26
18
6
33
31
5
23
11
3
28
7
32
7
28
16
7
28

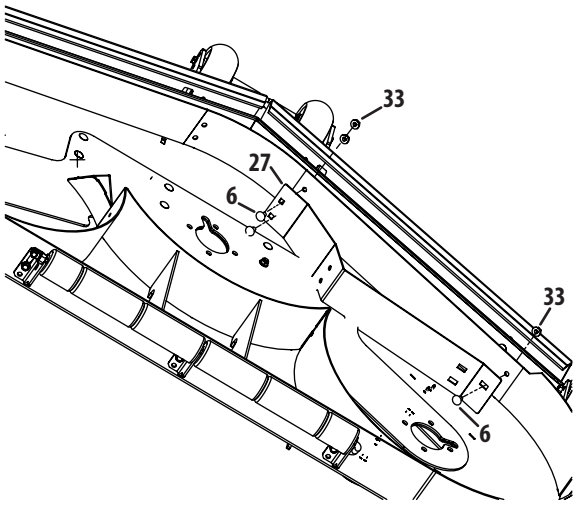
33
27
6
33
6

Ref.	Part Number	Description
1	00011444	Hex Cap Screw, 3/8-16, 1.25
2	00011925	Hex Cap Screw, 3/8-16, 4.00
3	936-0169	Lock Washer, 3/8
4	00012158	Flat Washer, 3/8
5	00022560	Flange Lock Hex Nut, 3/8-16
6	710-3178	Carriage Bolt, 3/8-16 x .75
7	750-3193	Wheel Spacer
8	01001169	Grass Catcher Roller
9	01001745	Pin, 5/8 Dia. x 1.2
10	710-3034	Carriage Screw, 3/8-16 x 1.25
11	710-0944	Hex Cap Screw, 3/8-16 x 4.50
12	732-04797	Torsion Spring
13	01004304	Hex Washer Screw, 3/8-16, .5
14	01004707	Deck Roller Mount Bracket
15	01005869P	T-Handle Latch Draw
16	01008049	Carriage Bolt, 3/8-16 x 4.00
17	01008225	Push Retainer
18	01008526	Finger Guard
19	01009102	Pin, .375 x 14.06
20	01009705P	Chute Deflector
21	02000109	Pillow Block, Steel
22	02002800	J-Hook w/ Threaded Roller
23	02004868-4021	Right Hand Front Adjustment Skirt
24	02004869-4021	Left Hand Front Adjustment Skirt
25	02004874	Chute Deflector Bracket
26	02005195-0637	Chute Baffle
27	02005696-0637	Baffle, 72" Adjustment
28	634-3159	Complete Wheel, 5.00 Dia.
29	680-00112-0637	72" Deck Assembly
30	703-07635-4021	Deck Belt Cover
31	710-3168	Carriage Bolt, 3/8-16 x 1
32	711-05159	Ball Wheel Mounting Shaft
33	712-04065	Flange Lock Hex Nut, 3/8-16
34	912-0641	Hex Nut, M16-1.5
35	712-3083	Lock Nut, Nylon Insert, 1/2-13
36	921-04041	Water Nozzle Adaptor
37	728-04033	Pop Rivet, 3/16
38	731-3005	Front Roller
39	936-0760	Lock Washer, 17 x 23.8 x 1.95
40	737-04003D	Deck Water Nozzle

60" Spindle Assembly

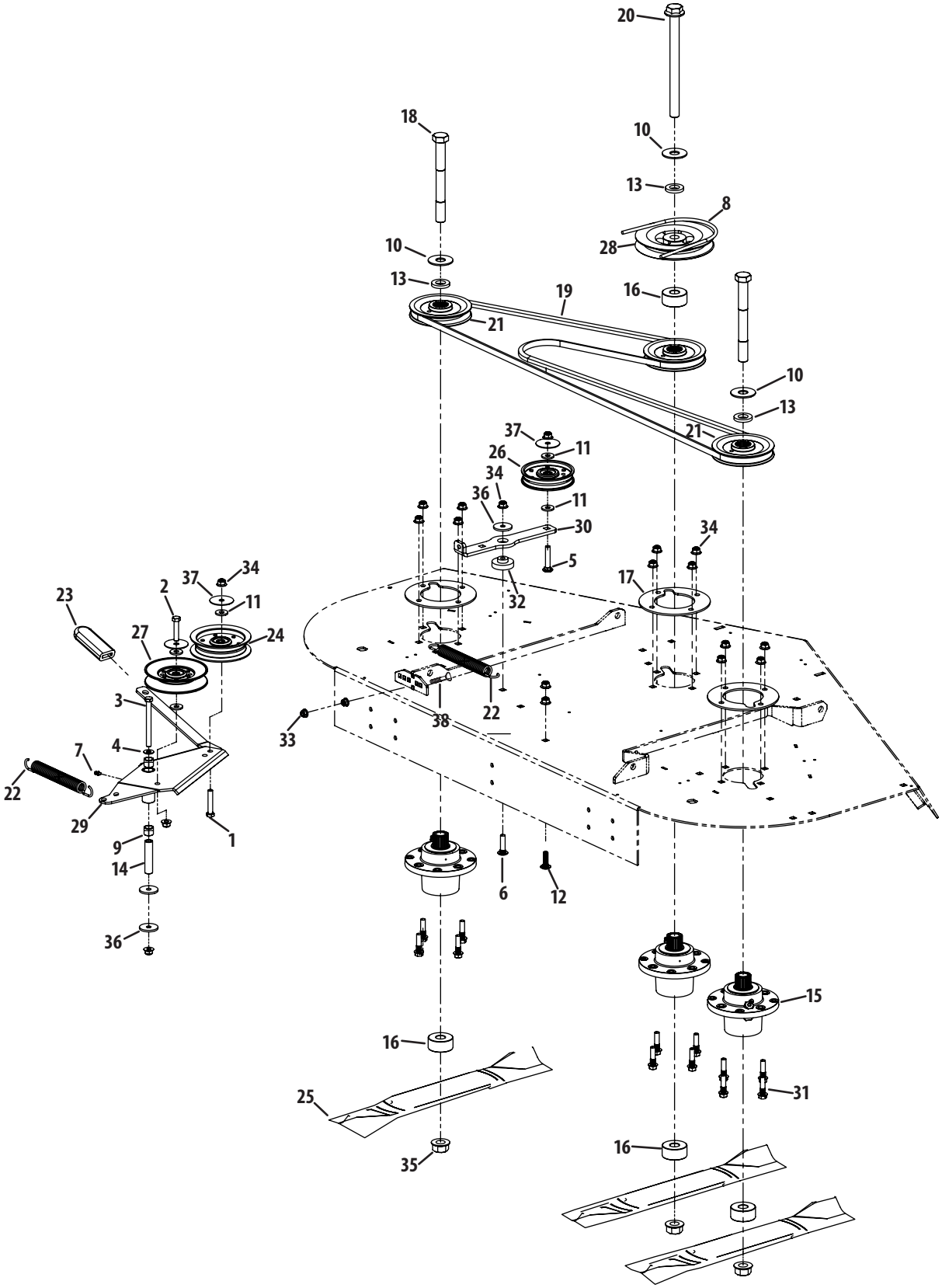

Ref.	Part Number	Description
1	00002528	Hex Screw, 3/8-16 x 2.00
2	00008495	Hex Screw, 3/8-16 x 1.75
3	00011925	Hex Screw, 3/8-16 x 4.00
4	00012158	Washer, .406 x .813 x .063
5	00014270	Carriage Bolt, 3/8-16 x 2.00
6	00030276	Carriage Bolt, 3/8-16 x 1.50
7	00060078	Grease Fitting, 1/4-28
8	00068079	V-Belt
9	01000308	Sleeve Bearing, .628 x .753 x .625
10	736-3014	Washer, .781 x 2.00 x .105
11	736-3052	Washer, .406 x 1.00 x .105
12	710-3034	Carriage Bolt, 3/8-16 x 1.25
13	01003123	Spacer, .812 x 1.47 x .218
14	01003245	Spacer, .390 x .635 x 2.75
15	01003532AP	Spindle Assembly
16	01004415	Spacer, .760 x 2.00 x .925
17	01004478-0637	Spindle Support Plate
18	01005213	Hex Screw, 3/4-16 x 7.00
19	01005376	V-Belt
20	01005388	Hex Screw, 3/4-16 x 9.00
21	01005616	Pulley
22	02003712	Extension Spring, .94x 7.57 x .14
23	02003740	Flat Grip, 1.0 x 3.2 x .25
24	02004447	Idler Pulley
25	02005019	Hi-Lift Blade, 21.0
26	02005077	Idler Pulley
27	02005079	Idler Pulley
28	02005097	Pulley
29	02005509	Double Idler Weldment w/ Handle
30	703-07010	Deck Idler Arm
31	710-04829	Hex Flg. Bolt, 3/8-16 x 1.5
32	738-04376	Shoulder Spacer, .854 x .280
33	712-04063	Flange Lock Nut, 5/16-18
34	712-04065	Flange Lock Nut, 3/8-16
35	712-3078	Flange Lock Nut, 3/4-16
36	936-0227	Flat Washer, .390 x 1.500 x .134
37	736-3040	Flat Washer, .406 x 1.92 x .060
38	710-0262	Carriage Bolt, 5/16-18 x 1.50

72" Spindle Assembly

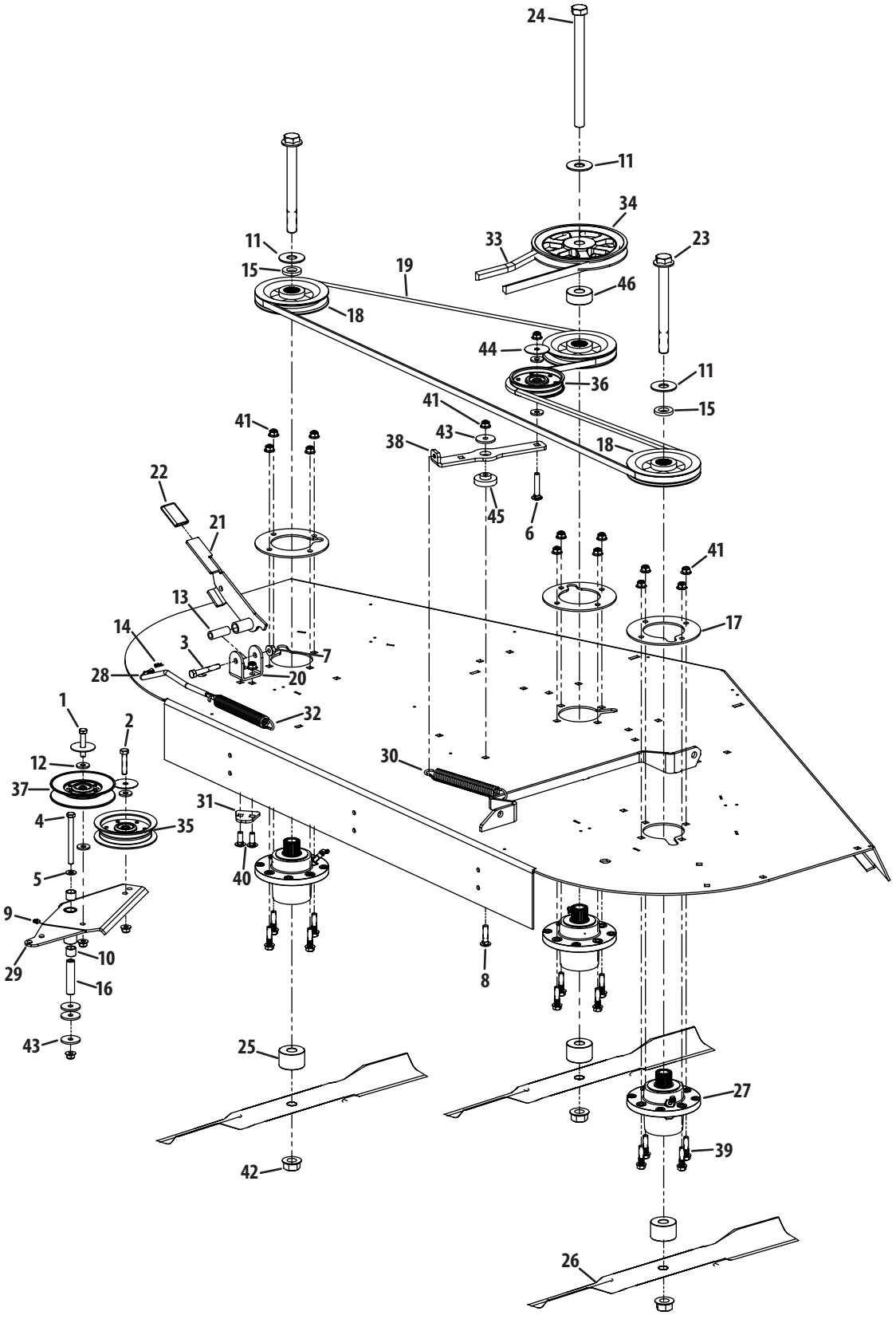

Ref.	Part Number	Description
1	00002528	Hex Screw, ⅜-16 x 2.00
2	00008495	Hex Screw, ⅜-16 x 1.75
3	00011861	Hex Screw, ⅜-16 x 2.50
4	00011925	Hex Screw, ⅜-16 x 4.00
5	00012158	Washer, .406 x .813 x .063
6	00014270	Carriage Bolt, ⅜-16 x 2.00
7	00022560	Flange Counter Lock Nut, ⅜-16
8	00030276	Carriage Bolt. ⅜-16 x 1.50
9	00060078	Grease Fitting, ¼-28
10	01000308	Sleeve Bearing, .628 x.753 x.625
11	736-3014	Washer, .781 x 2.00 x .105
12	736-3052	Washer, .406 x 1.00 x .105
13	01002751	Spacer, .390 x .630 x 1.75
14	914-0104	Hair Pin, ⅛ x 1.125 x .072
15	01003123	Spacer, .812 x 1.47 x .218
16	01003245	Spacer, .390 x .635 x 2.75
17	01004478-0637	Spindle Support Plate
18	01007499	Pulley
19	01007937	V-Belt
20	01008222-0637	Idler Tension Bracket
21	01008247-0637	Tension Handle Weldment
22	01008270	Idler Tension Handle Grip
23	01008542	Hex Screw, ¾-16 x 7.50

Ref.	Part Number	Description
24	01008543	Hex Screw, ¾-16 x 9.50
25	02000454	Spacer, .760 x 2.00 x 1.28
26	02000568	Blade, 25"
27	02000920P	Spindle Assembly
28	02001574	Tensioner Spring Rod
29	02003489	Idler Double Weldment
30	02003712	Extension Spring, .94 x 7.57 x .14
31	02004063	Idler Spring Bracket Adapter Plate
32	02004069	Extension Spring, .94 x 7.74 x .14
33	02004377	V-Belt
34	02004379	Pulley
35	02004447	Idler Pulley
36	02005077	Idler Pulley
37	02005079	Idler Pulley
38	703-07010	Deck Idler Arm
39	710-04829	Flange Bolt, ⅜-16 x 1.5
40	710-3168	Carriage Bolt, ⅜-16 x 1.00
41	712-04065	Flange Lock Nut, ⅜-16
42	712-3078	Flange Lock Nut, ¾-16
43	936-0227	Flat Washer, .390 x 1.500 x .134
44	736-3040	Flat Washer, .406 x 1.92 x .060
45	738-04376	Shoulder Spacer, .854 x .280
46	750-05184	Spacer, .760 x 2.000 x .790

Propane Tank & Engine Accessories

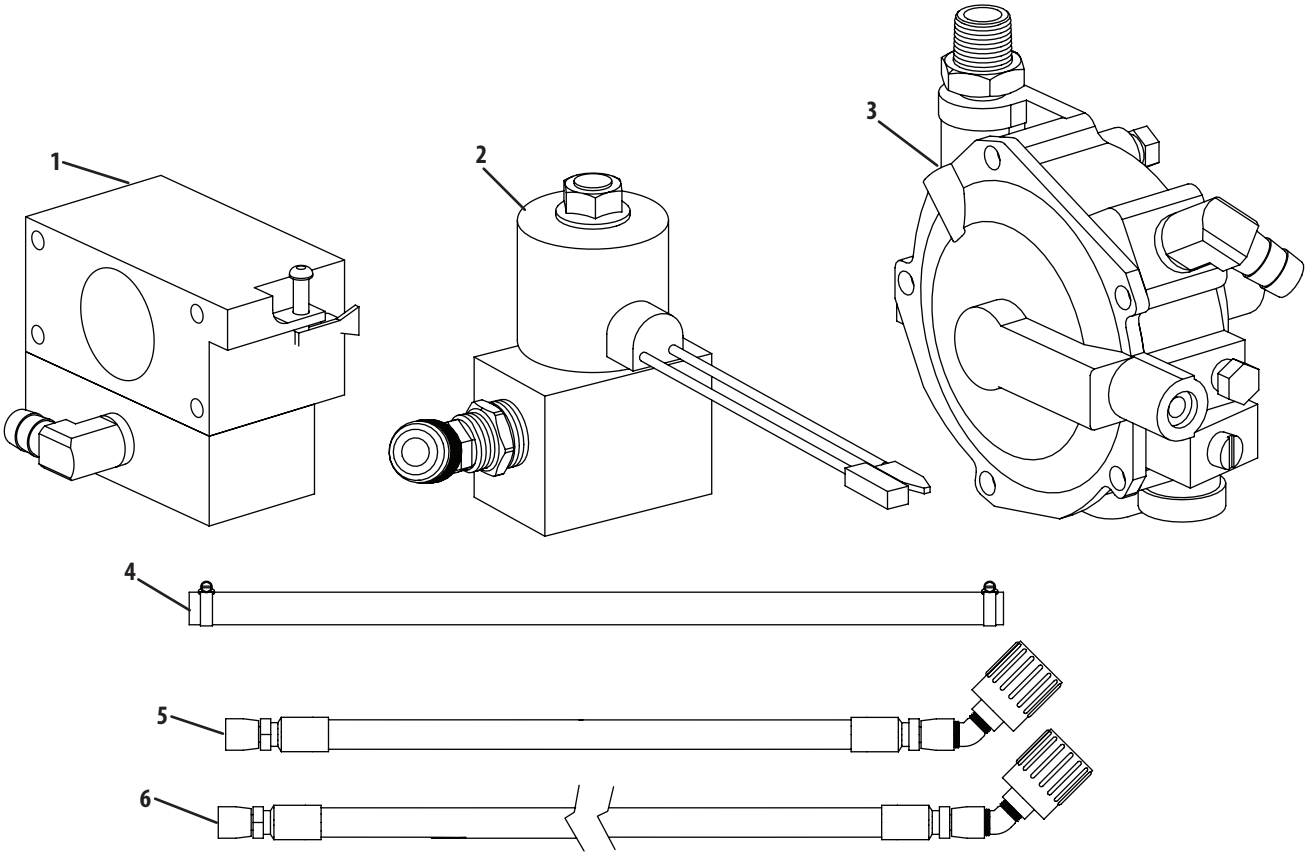

Ref	Part Number	Description
1	751-11836	Carburetor Kit (FX850-AS00-S)
—	751-11837	Carburetor Kit (FXT00V-BS04-R)
2	751-11838	Lockoff Engine Kit
3	751-11839	Regulator Engine Kit
4	751-11857	Hose Kit, ½ x 21 (FX850-AS00-S)
—	751-11858	Hose Kit, ⅝ x 18.5 (FXT00V-BS04-R)
5	751-11855	Regulator Hose Kit, 19″
6	751-11833	Regulator Hose Kit, 51″

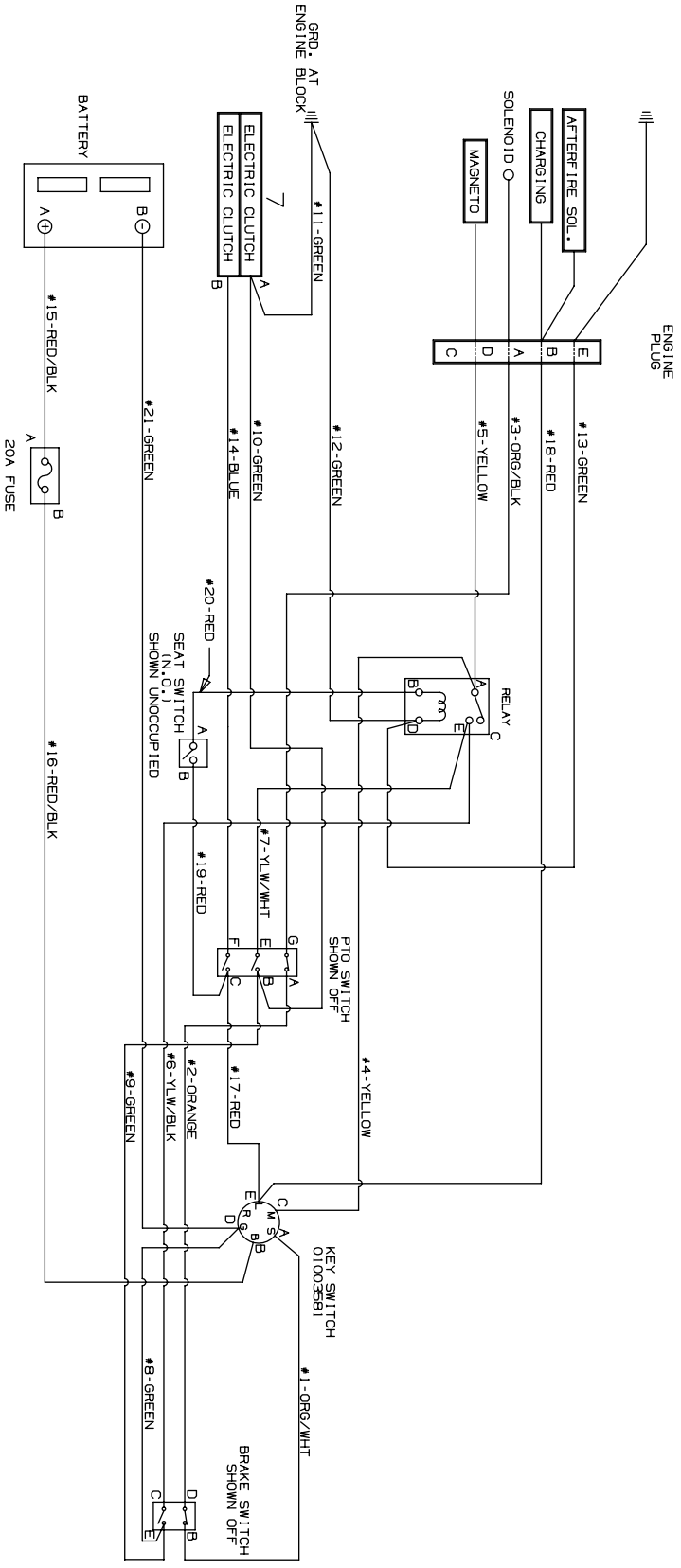
ENGINE PLUG
AFTERFIRE SOL.
CHARGING
SOLENOID
MAGNETO
#13-GREEN
#18-RED
#3-ORG/BLK
#5-YELLOW
GRD. AT ENGINE BLOCK
ELECTRIC CLUTCH
ELECTRIC CLUTCH
#11-GREEN
#12-GREEN
#10-GREEN
#14-BLUE
RELAY
BATTERY
#15-RED/BLK
20A FUSE
#21-GREEN
#16-RED/BLK
#20-RED
SEAT SWITCH (N.O.) SHOWN UNOCCUPIED
#19-RED
#7-YLW/WHT
PTO SWITCH SHOWN OFF
#4-YELLOW
#2-ORANGE
#6-YLW/BLK
#17-RED
#9-GREEN
KEY SWITCH 0100358I
#1-ORG/WHT
#8-GREEN
BRAKE SWITCH SHOWN OFF

TANK S LPG Labels



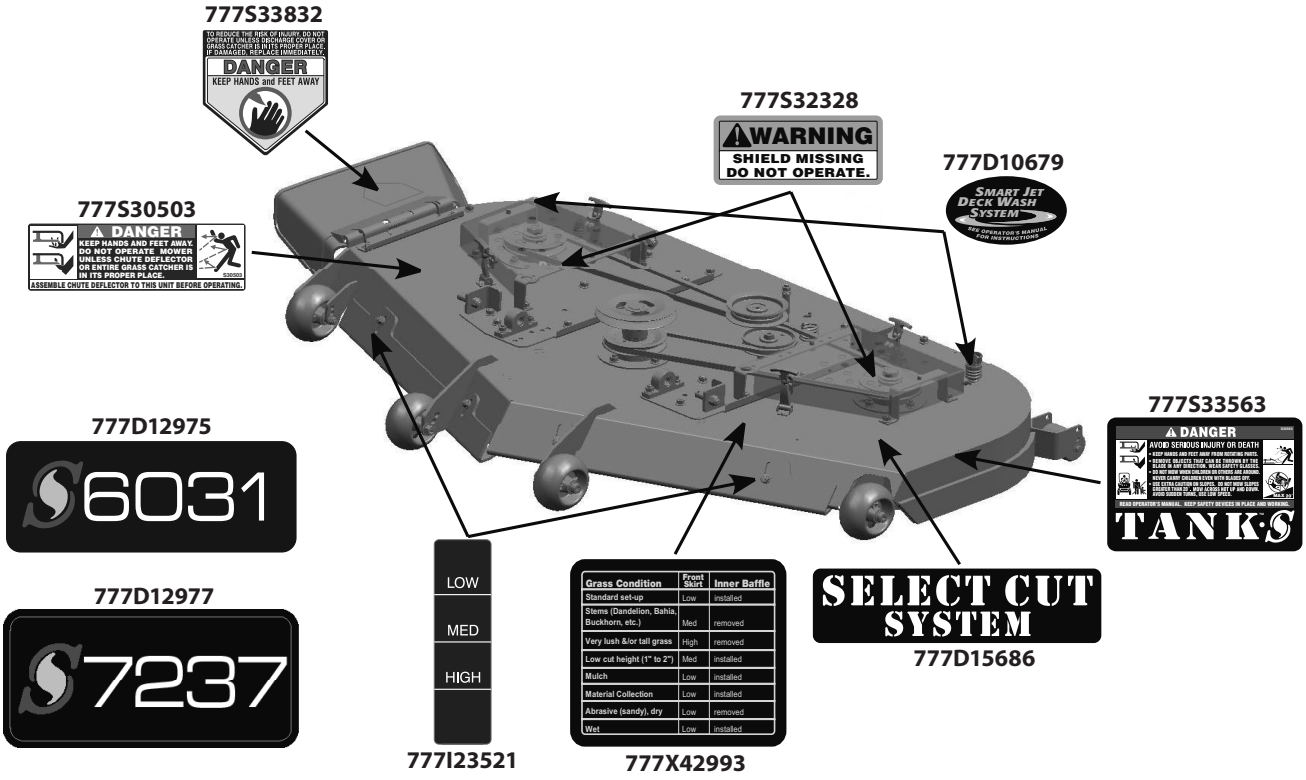
777S33832
DANGER
KEEP HANDS and FEET AWAY
777S32328
WARNING
SHIELD MISSING
DO NOT OPERATE.
777D10679
SMART JET DECK WASH SYSTEM
777S30503
DANGER
KEEP HANDS AND FEET AWAY.
DO NOT OPERATE MOWER UNLESS CHUTE DEFLECTOR OR ENTIRE GRASS CATCHER IS IN ITS PROPER PLACE.
ASSEMBLE CHUTE DEFLECTOR TO THIS UNIT BEFORE OPERATING.
777S33563
DANGER
AVOID SERIOUS INJURY OR DEATH
TANK·S
777D12975
S6031
777D12977
S7237
LOW
MED
HIGH
777I23521
Grass Condition | Front Skirt | Inner Baffle
Standard set-up | Low | installed
Stems (Dandelion, Bahia, Buckhorn, etc.) | Med | removed
Very lush &/or tall grass | High | removed
Low cut height (1" to 2") | Med | installed
Mulch | Low | installed
Material Collection | Low | installed
Abrasive (sandy), dry | Low | removed
Wet | Low | installed
777X42993
SELECT CUT SYSTEM
777D15686

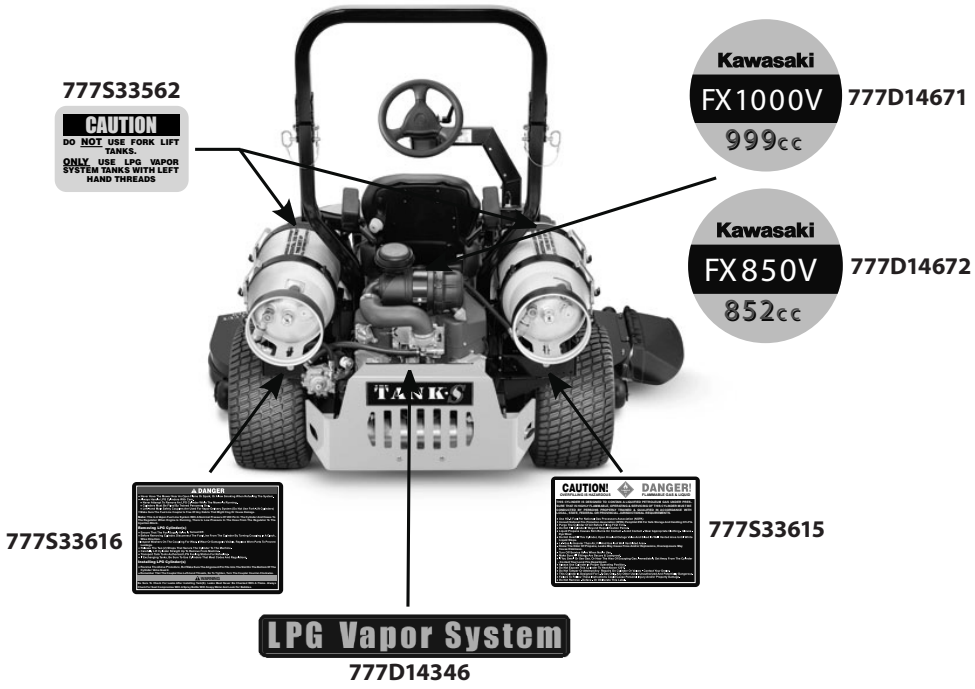
777S33562
CAUTION
DO NOT USE FORK LIFT TANKS.
ONLY USE LPG VAPOR SYSTEM TANKS WITH LEFT HAND THREADS
Kawasaki
FX1000V
999cc
777D14671
Kawasaki
FX850V
852cc
777D14672
TANK·S
777S33616
DANGER
CAUTION!
DANGER!
777S33615
LPG Vapor System
777D14346

Kawasaki FX850V Cylinder/Crankcase

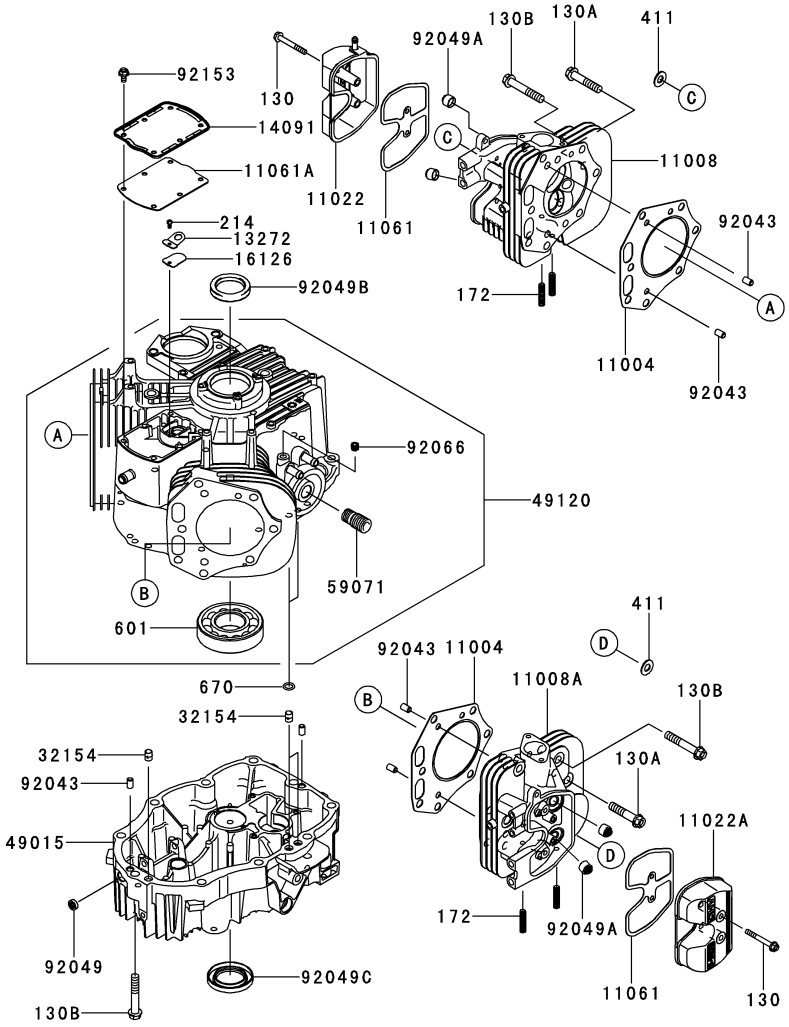

Ref.	Part Number	Description
11004	KM-11004-7025	Gasket-Head
11008	KM-11008-7036	Head-Comp-Cylinder
11008A	KM-11008-7037	Head-Comp-Cylinder
11022	KM-11022-6008	Case-Rocker
11022A	KM-11022-7025	Case Rocker
11061	KM-11061-7080	Gasket, Case Rocker
11061A	KM-11061-7081	Gasket, Breather
13272	KM-13272-7004	Plate, Breather
14091	KM-14091-7060	Cover, Breather
16126	KM-16262-7020	Valve, Breather
32154	KM-32154-7019	Pipe
49015	KM-49015-7088	Cover-Crankcase
49120	KM-49120-7117	Crankcase-Comp
59071	KM-59071-2079	Joint
92043	KM-92043-7024	Pin

Ref.	Part Number	Description
92049	KM-92049-7005	Seal-Oil,So 8x14x5 HS
92049A	KM-92049-7020	Seal, Oil, 7x15x13
92049B	KM-92049-7024	Seal-Oil,SD 40x54x9 R HS
92049C	KM-92049-7026	Seal-Oil,SD 40x62x8 L VS
92066	KM-92066-7026	Plug
92153	KM-92153-7043	Bolt, 6x12
130	KM-130BA0650	Bolt-Flanged, 6x50
130A	KM-130CA1050	Bolt-Flanged, 10x50
130B	KM-130CA1060	Bolt-Flanged, 10x60
172	KM-172BA0818	Bolt-Stud, 8x18
214	KM-214AA0408	Screw-Pan+-,4x8
411	KM-411AA1000	Washer, 10MM
601	KM-601A6308	Bearing-Ball
670	KM-670B2011	O Ring, 11MM

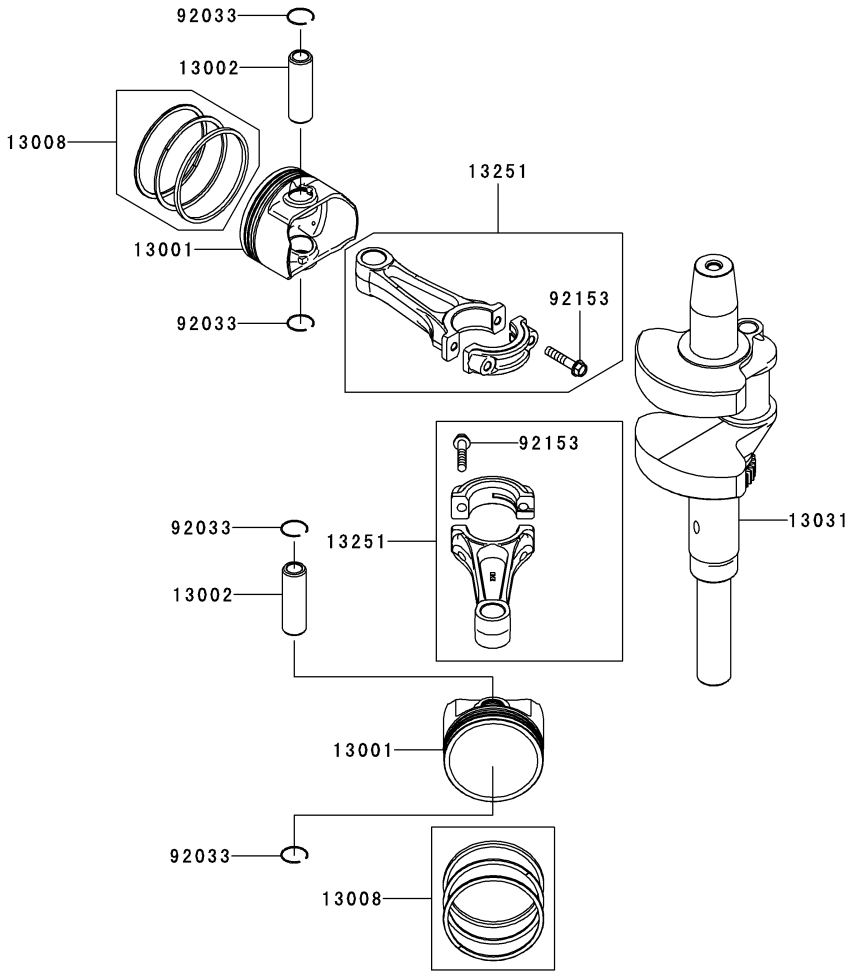

Ref.	Part Number	Description
13001	KM-13001-7025	Piston-Engine
13002	KM-13002-7005	Pin-Piston
13008	KM-13008-6069	Ring-Set-Piston
13031	KM-13031-7079	Crankshaft-Comp
13251	KM-13251-7031	Rod-Assy-Connecting
92033	KM-92033-7017	Ring-Snap
92153	KM-92153-2054	Bolt,7x35.2

Kawasaki FX850V Valve/Camshaft

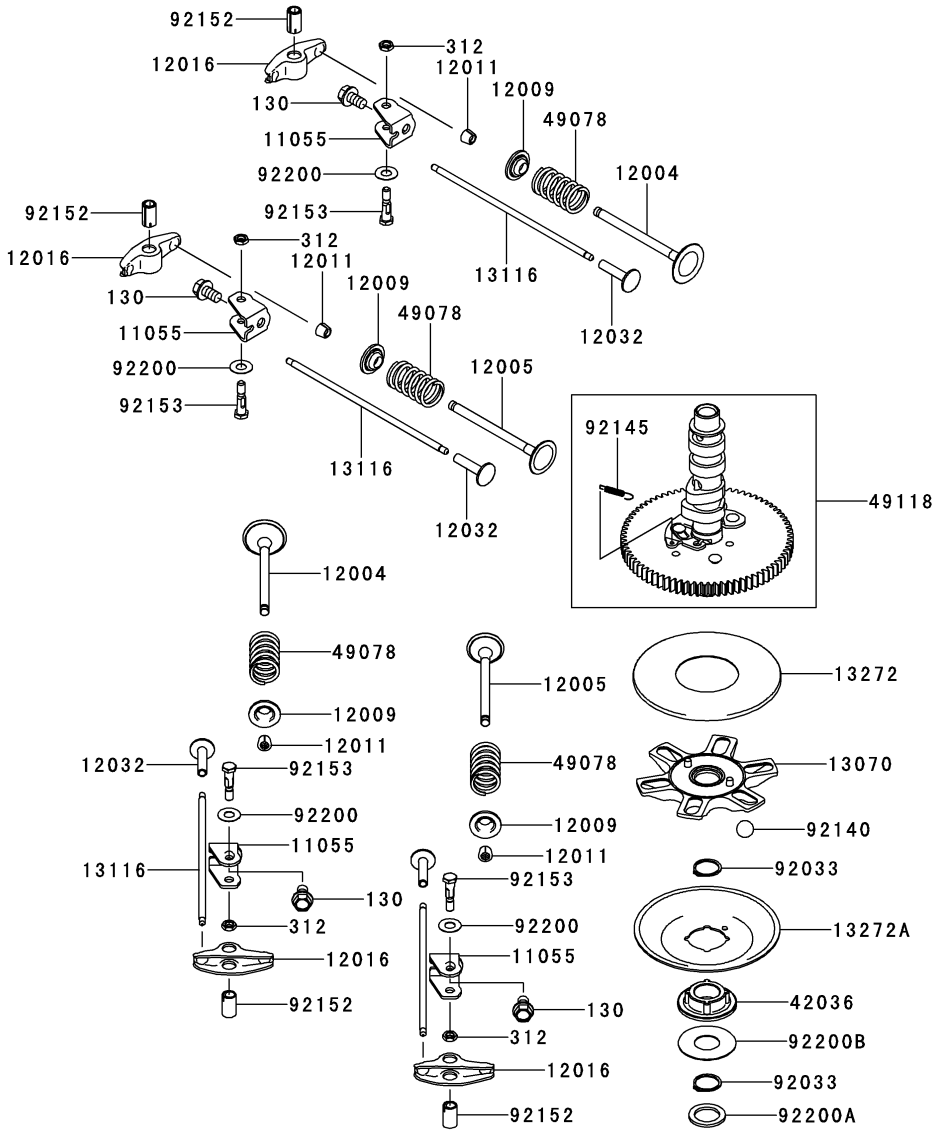

Ref.	Part Number	Description
11055	KM-11054-7009	Bracket
12004	KM-12004-7010	Vavle-Intake
12005	KM-12005-0711	Valve-Exhaust
12009	KM-12009-7004	Retainer-Valve Spring
12011	KM-12011-2052	Collet
12016	KM-12016-7016	Arm-Rocker
12032	KM-12032-7001	Tappet
13070	KM-13070-7016	Guide
13116	KM-13116-7006	Rod-Push
13272	KM-13272-7002	Plate
13272A	KM-13272-7003	Plate,Governor
42036	KM-42036-7019	Sleeve

Ref.	Part Number	Description
49078	KM-49078-7008	Spring-Engine Valve
49118	KM-49118-7026	Camshaft-Comp
92033	KM-92033-7012	Ring-Snap
92140	KM-92140-7005	Ball
92145	KM-92145-7001	Spring
92152	KM-92152-7020	Collar
92153	KM-92153-7100	Bolt, 6x29.5
92200	KM-92200-2151	Washer, 8.1x18x0.5
92200A	KM-92200-7044	Washer, 20.3x29x2.28
92200B	KM-92200-7045	Washer, 20x46x0.91
130	KM-130AA0814	Bolt-Flanged, 8x14
312	KM-312AA0600	Nut-Hex, 6MM

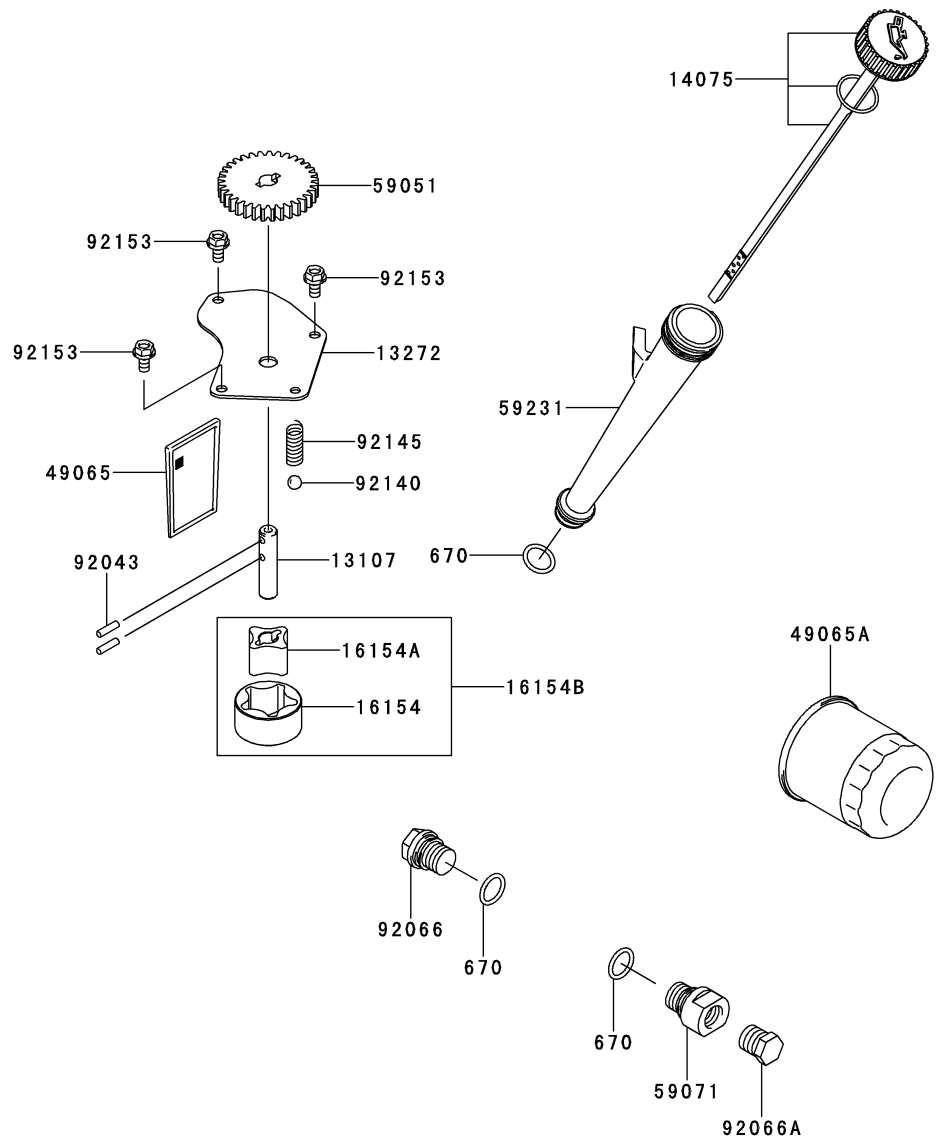

Ref.	Part Number	Description
13107	KM-13107-7009	Shaft
13272	KM-13272-7005	Plate
14075	KM-14075-7012	Cap-Assy
16154	KM-16154-1075	Rotor-Pump,Outer
16154A	KM-16154-1076	Rotor-Pump,Inner
16154B	KM-16154-1079	Rotor-Pump
49065	KM-49065-7004	Filter Oil
49065A	KM-49065-7010	Filter Oil
59051	KM-59051-7011	Gear-Spur

Ref.	Part Number	Description
59071	KM-59071-7023	Joint
59231	KM-59231-7014	Filler
92043	KM-92043-7003	Pin
92066	KM-92066-7003	Plug
92066A	KM-92066-7006	Plug
92140	KM-92140-7003	Ball
92145	KM-92145-7002	Spring
92153	KM-92153-7043	Bolt, 6x12
670	KM-670D2016	O-Ring, 16MM

Kawasaki FX850V Cooling Equipment

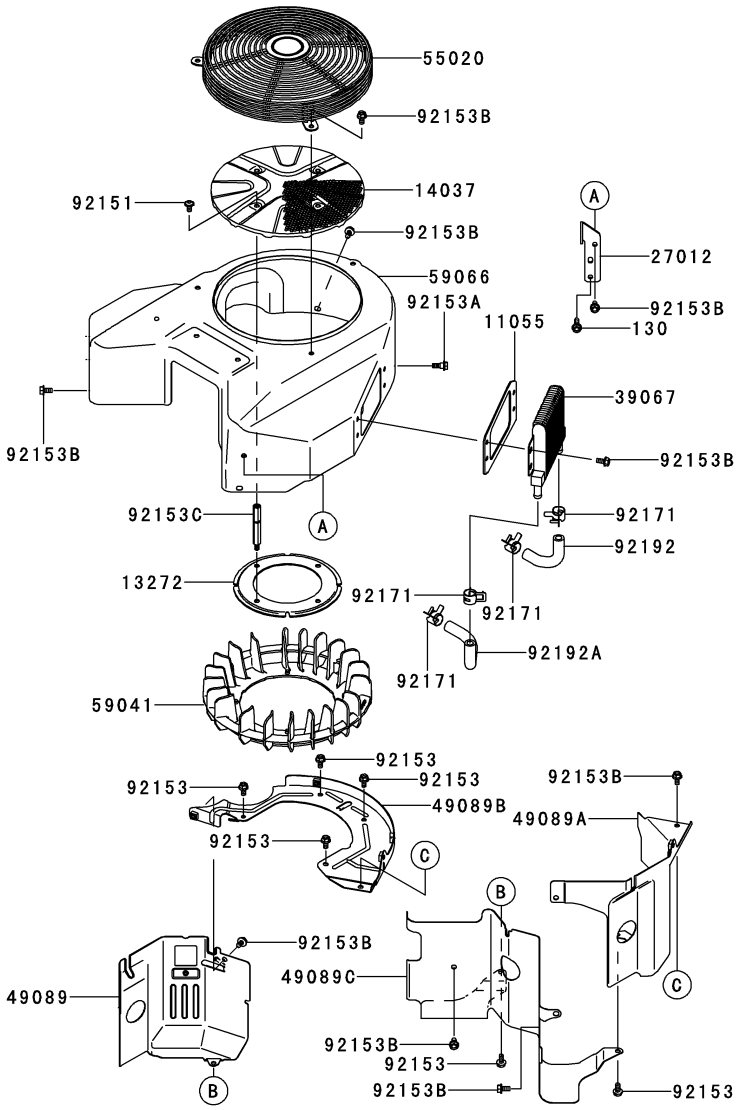

Ref.	Part Number	Description
11055	KM-11055-7005	Bracket
13272	KM-13272-7006	Plate, Fan
14037	KM-14037-70299H	Screen
27012	KM-27012-7009	Hook, Lift
39067	KM-39067-7007	Cooler-Oil
49089	KM-490897064753	Shroud-Engine
49089A	KM-490897065753	Shroud-Engine
49089B	KM-49089-7066	Shroud-Engine, Rear
49089C	KM-490897067753	Shroud-Engine, V-Bank
55020	KM-55020-70169H	Guard
59041	KM-59041-7019	Fan

Ref.	Part Number	Description
59066	KM-590667042753	Housing-Fan
92151	KM-92151-7012	Bolt, 6x12
92153	KM-92153-0010	Bolt
92153A	KM-92153-7007	Bolt
92153B	KM-92153-7043	Bolt, 6x12
92153C	KM-92153-7101	Bolt
92171	KM-92171-7015	Clamp
92192	KM-92192-7089	Tube
92192A	KM-92192-7090	Tube
130	KM-130AA0620	Bolt-Flanged, 6x20

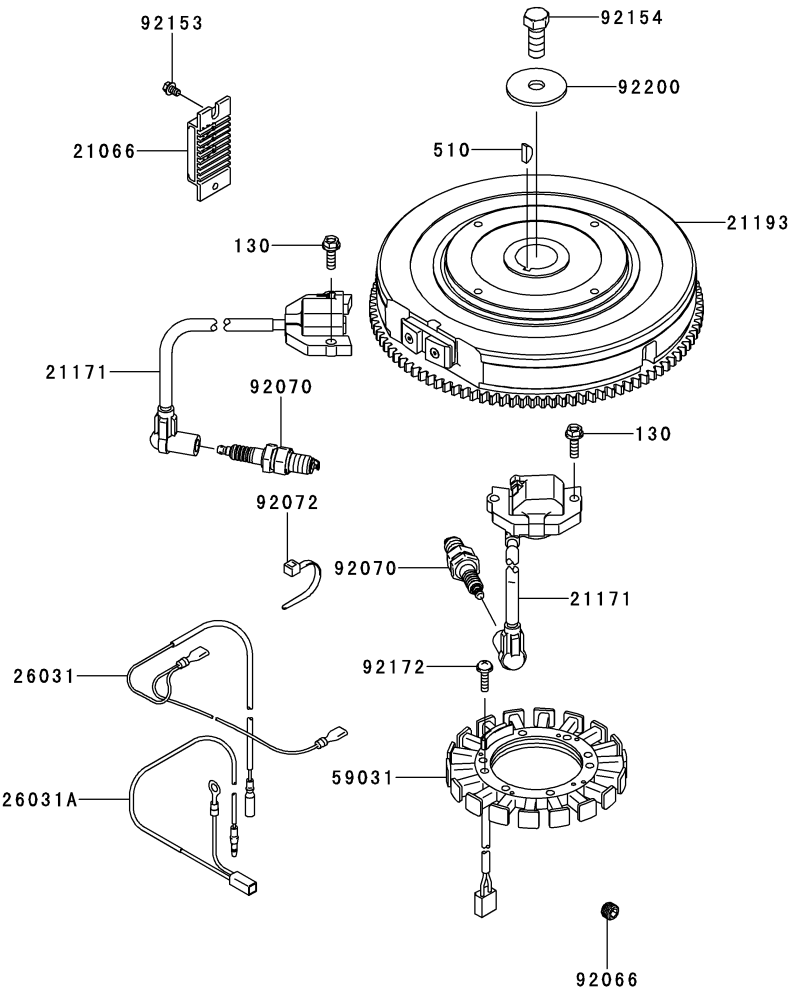

Ref.	Part Number	Description
21066	KM-21066-7011	Regulator-Voltage
21171	KM-21171-7047	Coil-Assy-Ignition
21193	KM-21193-7049	Flywheel-Assy
26031	KM-26031-7033	Harness
26031A	KM-26031-7034	Harness
59031	KM-59031-7015	Coil-Charging
92066	KM-92066-7026	Plug
92070	KM-BPR4ES	Plug-Spark,RCJ8Y,Solid

Ref.	Part Number	Description
92072	KM-92072-7003	Band
92153	KM-92153-7029	Bolt
92154	KM-92154-7003	Bolt, 12x30
92172	KM-92172-7018	Screw, 5x20
92200	KM-92200-7040	Washer, 12.2x46x3
130	KM-130AA0620	Bolt-Flanged, 6x20
510	KM-510A5100	Key-Woodruff

Kawasaki FX850V Carburetor

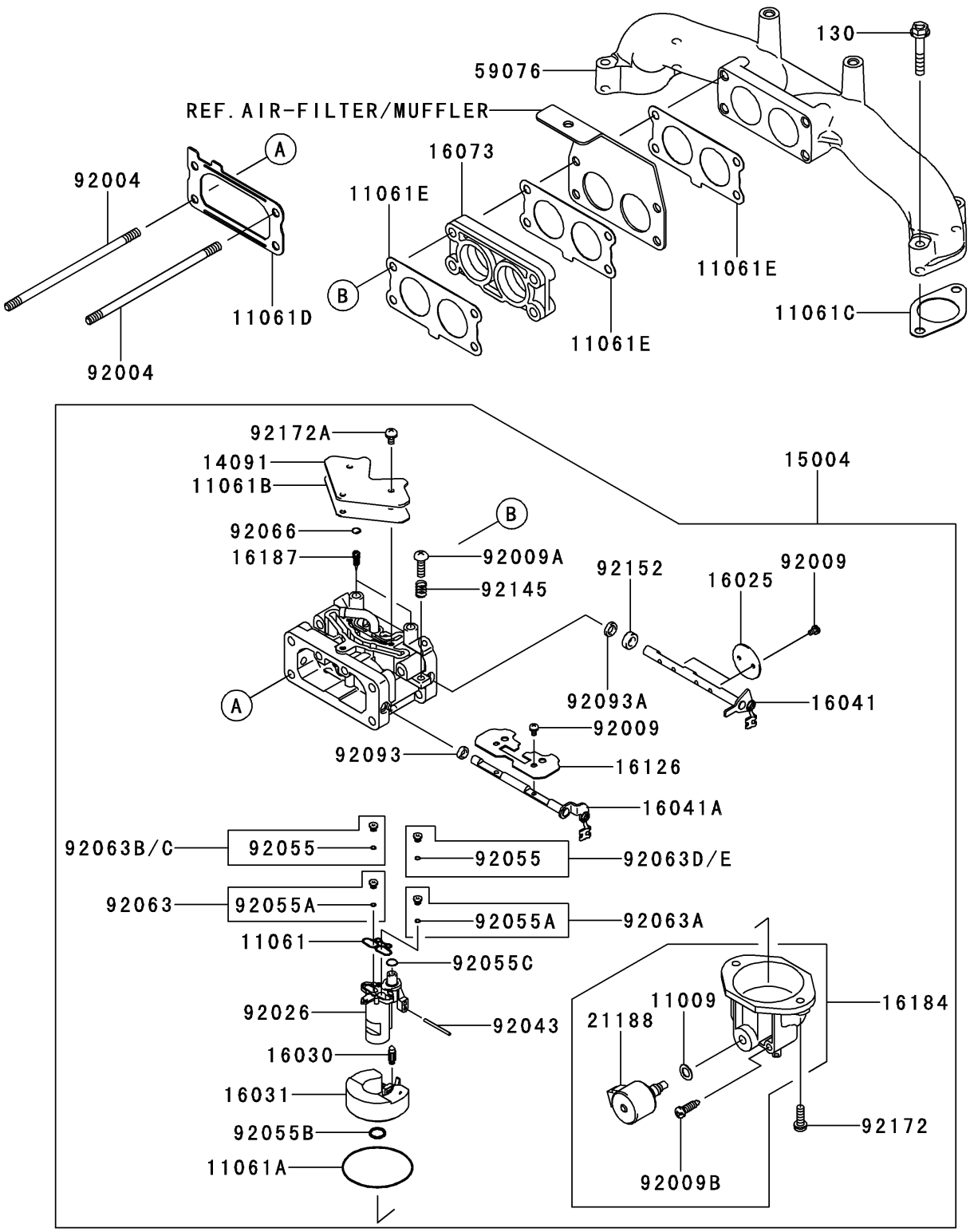

Ref.	Part Number	Description
11009	KM-11009-2056	Gasket
11061	KM-11061-7037	Gasket
11061A	KM-11061-7038	Gasket
11061B	KM-11061-7039	Gasket
11061C	KM-11061-7070	Gasket, Head/Manifold
11061D	KM-11061-7091	Gasket, Carburetor/Pipe
11061E	KM-11061-7092	Gasket, Carburetor/Manifold
14091	KM-14091-7031	Cover
15004	KM-15004-7043	Carburetor - Assy
16025	KM-16025-7010	Valve-Throttle
16030	KM-16030-7004	Valve-Float
16031	KM-16031-7003	Float
16041	KM-16041-7025	Shaft-Carburetor
16041A	KM-16041-7039	Shaft-Carburetor
16073	KM-16073-7011	Insulator
16126	KM-16126-7021	Valve
16184	KM-16184-7023	Chamber - Assy - Float
16187	KM-16187-7005	Needle-Jet
21188	KM-21188-7003	Solenoid
59076	KM-59076-7013	Manifold-Intake
92004	KM-92004-7028	Stud, 6x120
92009	KM-92009-7003	Screw
92009A	KM-92009-7004	Screw

Ref.	Part Number	Description
92009B	KM-92009-7006	Screw, Drain
92026	KM-92026-7024	Spacer
92043	KM-92043-7014	Pin
92055	KM-92055-7013	Ring-O
92055A	KM-92055-7013	Ring-O
92055B	KM-92055-7016	Ring-O
92055C	KM-92055-7024	Ring-O
92063	KM-92063-7110	Jet-Main,#118
92063A	KM-92063-7111	Jet-Main, #120
92063B	KM-92063-7135	Jet-Main, #115
92063C	KM-92063-7136	Jet-Main, #112
92063D	KM-92063-7137	Jet-Main, #117
92063E	KM-92063-7138	Jet-Main, #114
92066	KM-92066-7009	Plug, Expansion
92093	KM-92093-7001	Seal
92093A	KM-92093-7002	Seal
92145	KM-92145-7010	Spring
92145A	KM-92145-7011	Spring
92152	KM-92152-7005	Collar
92172	KM-92172-7005	Screw
92172A	KM-92172-7006	Screw
130	KM-130AA0635	Bolt-Flanged, 6x35

Kawasaki FX850V Control Equipment

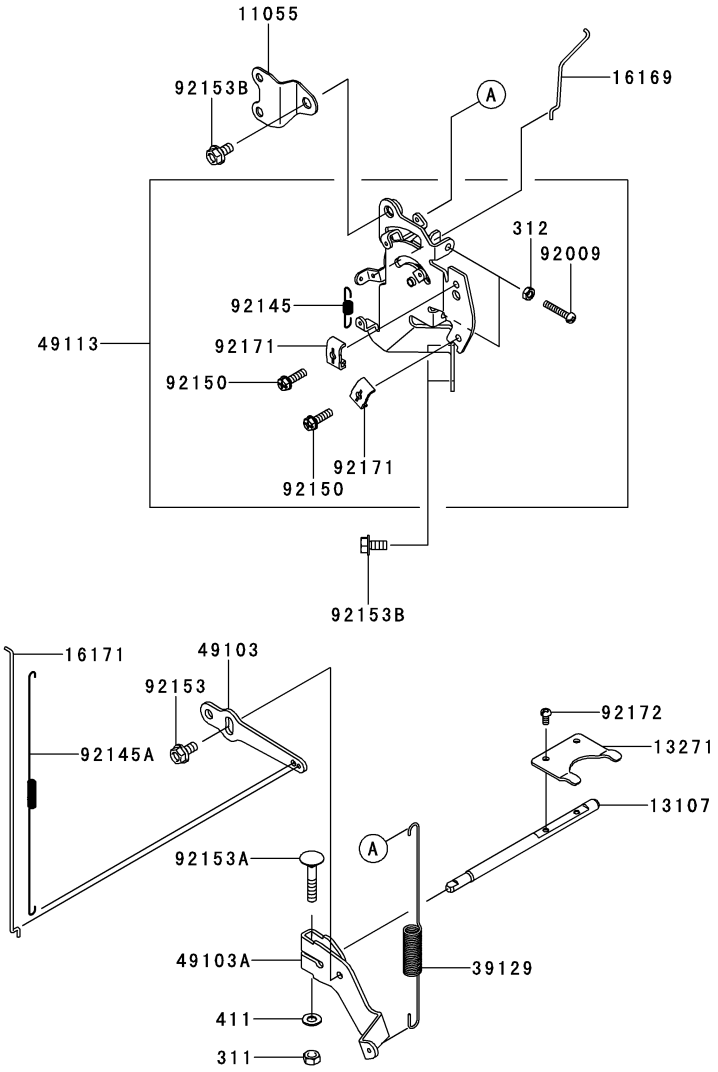

Ref.	Part Number	Description
11055	KM-11055-7001	Bracket
13107	KM-13107-7047	Shaft, Governor
13271	KM-13271-7038	Plate
16169	KM-16169-7020	Link-Choke
16171	KM-16171-7020	Link
39129	KM-39129-7020	Spring-Governor
49103	KM-49103-7012	Arm-Governor
49103A	KM-49103-7018	Arm-Governor
49113	KM-49113-7060	Panel-Comp-Control
92009	KM-92009-2381	Screw,5x30
92145	KM-92145-7044	Spring

Ref.	Part Number	Description
92145A	KM-92145-7055	Spring
92150	KM-92150-2182	Bolt,5x18
92153	KM-92153-0009	Bolt,6x12
92153A	KM-92153-7033	Bolt,6x35
92153B	KM-92153-7043	Bolt,6x12
92171	KM-92171-7018	Clamp
92172	KM-92172-7033	Screw, 4x8
311	KM-311AA0600	Nut-Hex, 6MM
312	KM-312AA0500	Nut-Hex, 5MM
411	KM-411AA0600	Washer-Plain

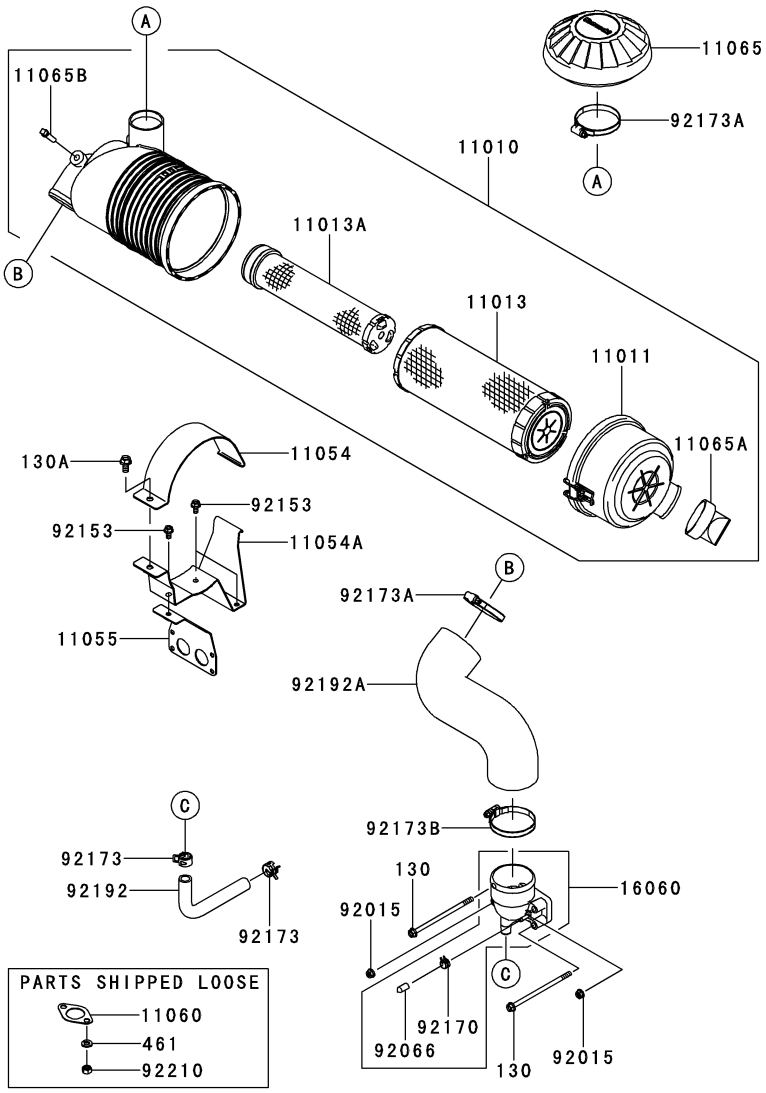

Ref.	Part Number	Description
11010	KM-11010-7028	Filter-Assy-Air
11011	KM-11011-7056	Case-Air Filter
11013	KM-11013-7044	Element-Air Filter
11013A	KM-11013-7045	Element-Air Filter
11054	KM-11054-70139X	Bracket
11054A	KM-11054-70169X	Bracket
11055	KM-11055-70079X	Bracket
11060	KM-11060-7016	Gasket-Muffler
11065	KM-11065-7025	Cap
11065A	KM-11065-7031	Cap
11065B	KM-11065-7032	Cap
16060	KM-16060-0723	Pipe-Intake
92015	KM-92015-1367	Nut

Ref.	Part Number	Description
92066	KM-92066-0095	Plug
92153	KM-92153-7043	Bolt, 6x12
92170	KM-92170-2042	Clamp
92173	KM-92173-7003	Clamp
92173A	KM-92173-7010	Clamp
92173B	KM-92173-7011	Clamp
92192	KM-92192-7086	Tube
92192A	KM-92192-7166	Tube
92210	KM-92210-7027	Nut, M8
130	KM-130AA06120	Bolt, Flanged, 6x120
130A	KM-130AA0816	Bolt, Flanged, 8x16
461	KM-461DA0800	Washer-Spring, 8MM

Kawasaki FX850V Fuel Tank/Valve

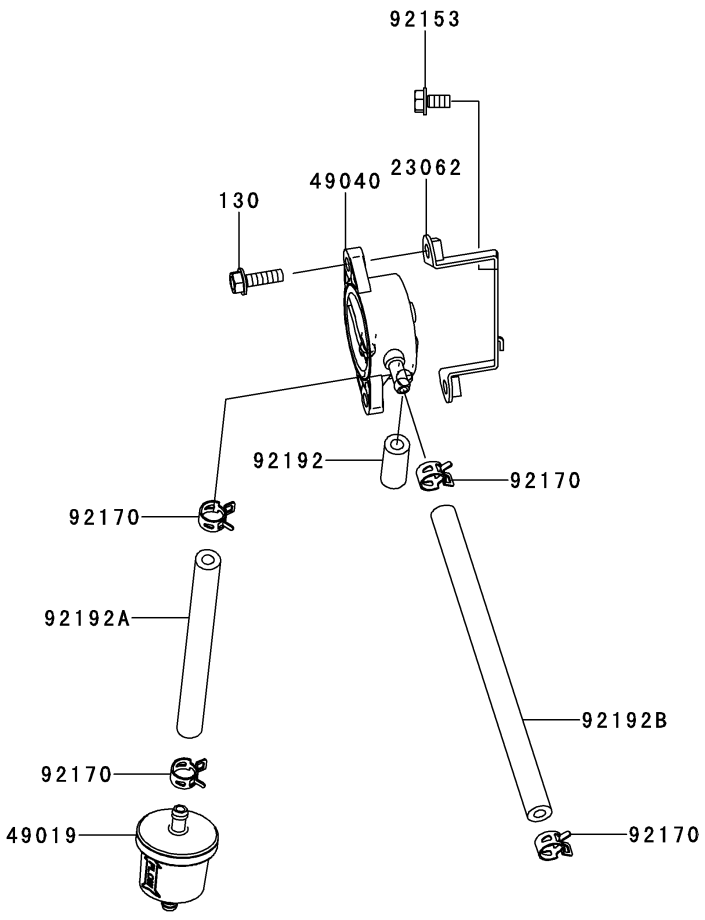

Ref.	Part Number	Description
23062	KM-23062-7018	Bracket-Comp
49019	KM-49019-7005	Filter-Fuel
49040	KM-49040-7001	Pump-Fuel
92153	KM-92153-7043	Bolt, 6x12
92170	KM-92170-2009	Clamp
92192	KM-92192-7088	Tube, 6.4 x 12.7x28.5
92192A	KM-92192-7169	Tube, 6.35x12.7x140
92192B	KM-92192-7173	Tube, 6.35x12.7x195
130	KM-130AA0620	Bolt-Flanged, 6x20

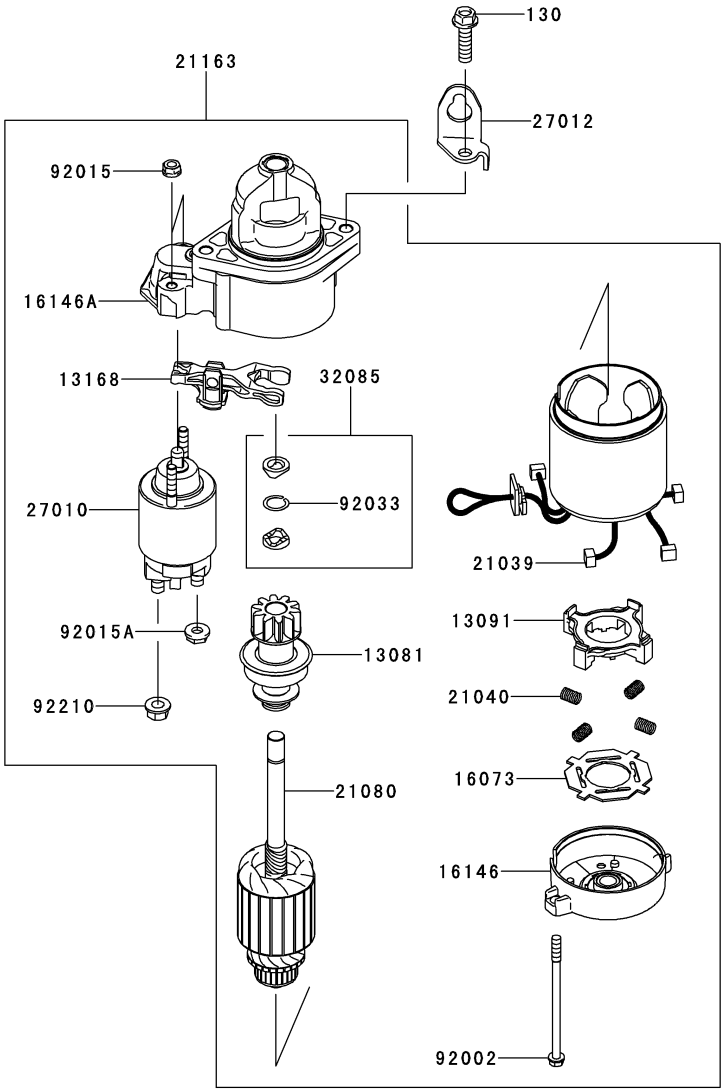

Ref.	Part Number	Description
13081	KM-13081-7001	Clutch-Assy
13091	KM-13091-2068	Holder, Brush
13168	KM-13168-2148	Lever, Shift
16073	KM-16073-2098	Insulator
16146	KM-16146-2077	Coaver-Assy
16146A	KM-16146-7029	Cover-Assy
21039	KM-21039-2059	Brush
21040	KM-21040-2052	Spring-Brush
21080	KM-21080-2058	Armature
21163	KM-21163-7025	Starter-Electric

Ref.	Part Number	Description
27010	KM-27010-7005	Switch
27012	KM-27012-7005	Hook, Lift
32085	KM-32085-2097	Stopper
92002	KM-92002-2277	Bolt
92015	KM-92015-2146	Nut
92015A	KM-92015-2147	Nut
92033	KM-92033-2081	Ring-Snap
92210	KM-92210-2085	Nut
130	KM-130AA0830	Bolt-Flanged, 8x30

Kawasaki FX850V Labels

56014



56033



56070



Ref.	Part Number	Description
56014	KM-56014-7003	Emblem
56033	KM-56033-7001	Label-Manual
56070	KM-56070-7001	Label-Warning

FX1000 Kawasaki Cylinder/Crankcase

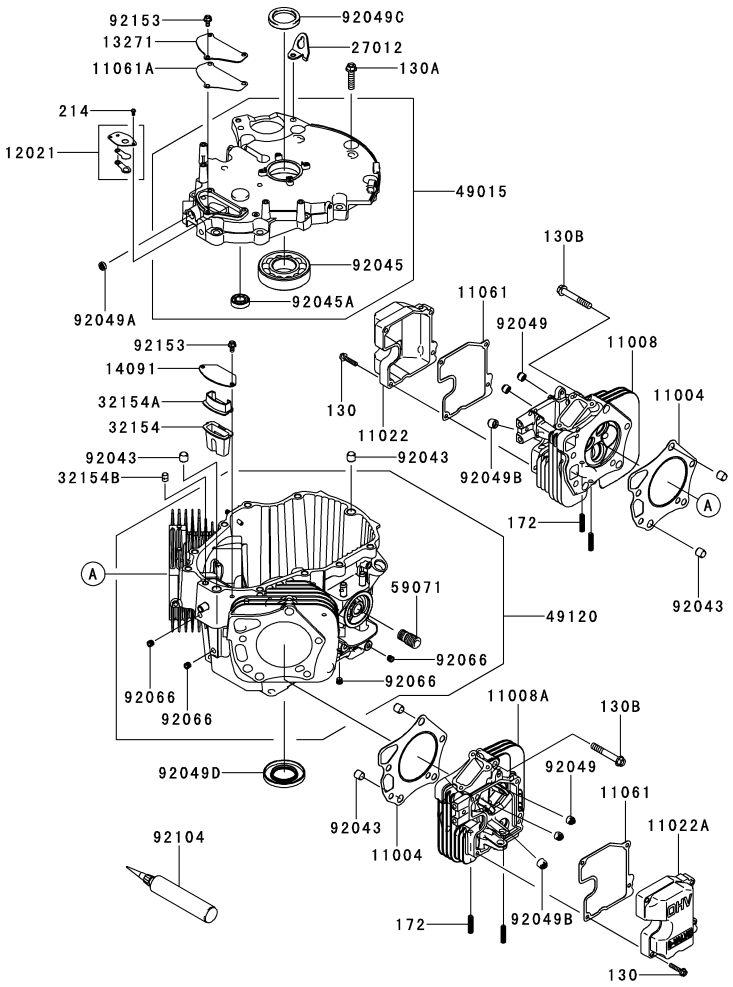

Ref.	Part Number	Description
11004	KM-11004-7023	Gasket-Head
11008	KM-11008-7034	Head-Comp-Cylinder
11008A	KM-11008-0739	Head-Comp-Cylinder
11022	KM-11022-0707	Case-Rocker
11022A	KM-11022-0708	Case Rocker
11061	KM-11061-7055	Gasket, Case Rocker
11061A	KM-11061-7065	Gasket, Breather-Cover
12021	KM-12021-7003	Valve-Assy-Reed,Breather
13271	KM-13271-7037	Plate, Breather-Cover
14091	KM-14091-7052	Cover, Breather
27012	KM-27012-7008	Hook
32154	KM-32154-7014	Pipe,Breather
32154A	KM-32154-7015	Pipe,Breather
32154B	KM-32154-7019	Pipe
49015	KM-49015-7093	Cover-Crankcase
49120	KM-49120-7125	Crankcase-Comp
59071	KM-59071-2079	Joint

Ref.	Part Number	Description
92043	KM-92043-1266	Pin
92045	KM-92045-0712	Bearing-Ball, 6308
92045A	KM-92045-7002	Bearing-Ball, 15x32x9
92049	KM-92049-7001	Seal-Oil,RVC2 6x11x10.2
92049A	KM-92049-7005	Seal, Oil,SO 8x14x5 HS
92049B	KM-92049-7020	Seal-Oil, 7x15x13
92049C	KM-92049-7024	Seal-Oil,SD 40x54x9 R HS
92049D	KM-92049-7025	Seal-Oil,SD 40x72x8 L VS
92066	KM-92066-7026	Plug
92104	KM-92104-7001	Gasket
92153	KM-92153-7043	Bolt, 6x12
130	KM-130AA0630	Bolt-Flanged, 6x30
130A	KM-130CA1040	Bolt-Flanged, 10x40
130B	KM-130CA1065	Bolt-Flanged, 10x65
172	KM-172BA0818	Bolt-Stud, 8x18
214	KM-214AA0408	Screw-Pan+-,4x8

FX1000 Kawasaki Piston/Crankcase

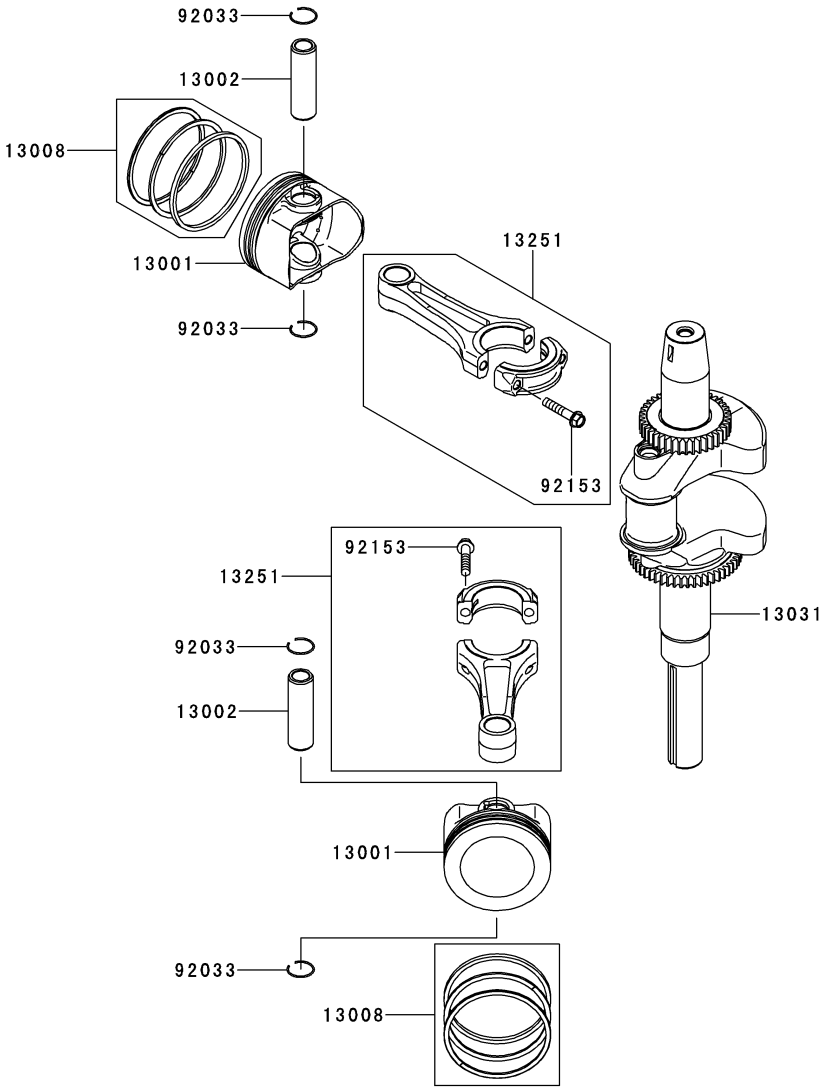

Ref.	Part Number	Description
13001	KM-13001-7032	Piston-Engine
13002	KM-13002-7004	Pin-Piston
13008	KM-13008-7007	Ring-Set-Piston
13031	KM-13031-7074	Crankshaft-Comp
13251	KM-13251-7030	Rod-Assy-Connecting
92033	KM-92033-2176	Ring-Snap
92153	KM-92153-2054	Bolt,7x35.2

FX1000 Kawasaki Valve/Camshaft

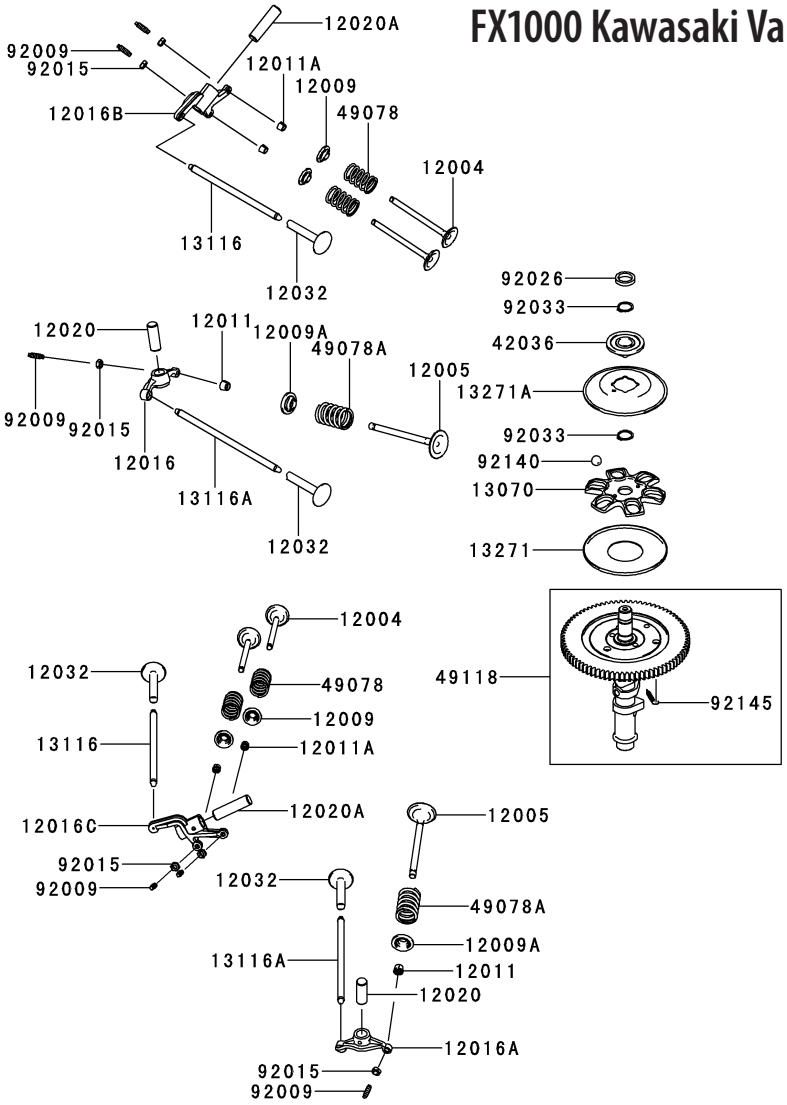

Ref.	Part Number	Description
12004	KM-12004-7006	Vavle-Intake
12005	KM-12005-0714	Valve-Exhaust
12009	KM-12009-7001	Retainer-Vavle Spring
12009A	KM-12009-7004	Retainer-Vavle Spring
12011	KM-12011-2052	Collet
12011A	KM-12011-2056	Collet
12016	KM-12016-0713	Arm-Rocker, #1, EX
12016A	KM-12016-0714	Arm-Rocker, #2, EX
12016B	KM-12016-7014	Arm-Rocker, #1, IN
12016C	KM-12016-7015	Arm-Rocker, #2, IN
12020	KM-12020-0707	Shaft-Rocker,EX
12020A	KM-12020-0708	Shaft-Rocker,IN
12032	KM-12032-7002	Tappet
13070	KM-13070-7004	Guide

Ref.	Part Number	Description
13116	KM-13116-2054	Rod-Push
13116A	KM-13116-7005	Rod-Push
13271	KM-13271-7007	Plate
13271A	KM-13271-7021	Plate,Governor
42036	KM-42036-7010	Sleeve
49078	KM-49078-7006	Spring-Engine Valve, IN
49078A	KM-49078-7007	Spring-Engine Valve, EX
49118	KM-49118-7018	Camshaft-Comp
92009	KM-92009-1109	Screw
92015	KM-92015-1137	Nut
92026	KM-92026-7019	Spacer
92033	KM-92033-7001	Ring-Snap
92140	KM-92140-7005	Ball
92145	KM-92145-7001	Spring

FX1000 Kawasaki Lubrication-Equipment

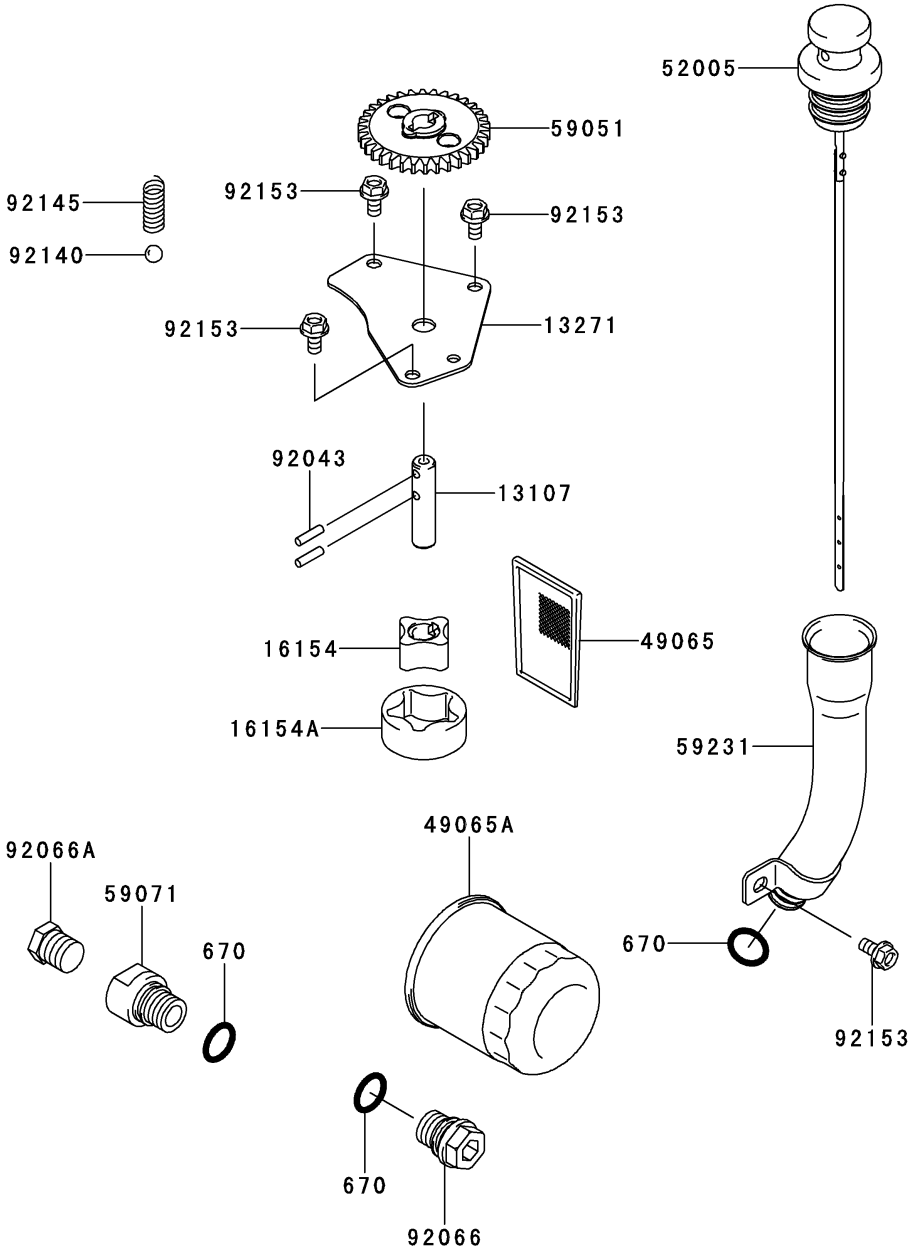

Ref.	Part Number	Description
13107	KM-13107-7009	Shaft
13271	KM-13271-7034	Plate,Rotor-Pump
16154	KM-16154-7007	Rotor-Pump,In
16154A	KM-16154-7008	Rotor-Pump,Out
49065	KM-49065-7004	Filter Oil
49065A	KM-49065-7010	Filter Oil
52005	KM-52005-7023	Gauge
59051	KM-59051-7026	Gear-Spur,Oil-Pump
59071	KM-59071-7023	Joint

Ref.	Part Number	Description
59231	KM-59231-7012	Filler
92043	KM-92043-7003	Pin
92066	KM-92066-7003	Plug
92066A	KM-92066-7006	Plug
92140	KM-92140-7003	Ball
92145	KM-92145-7046	Spring
92153	KM-92153-7043	Bolt, 6x12
670	KM-670D2016	O-Ring, 16MM

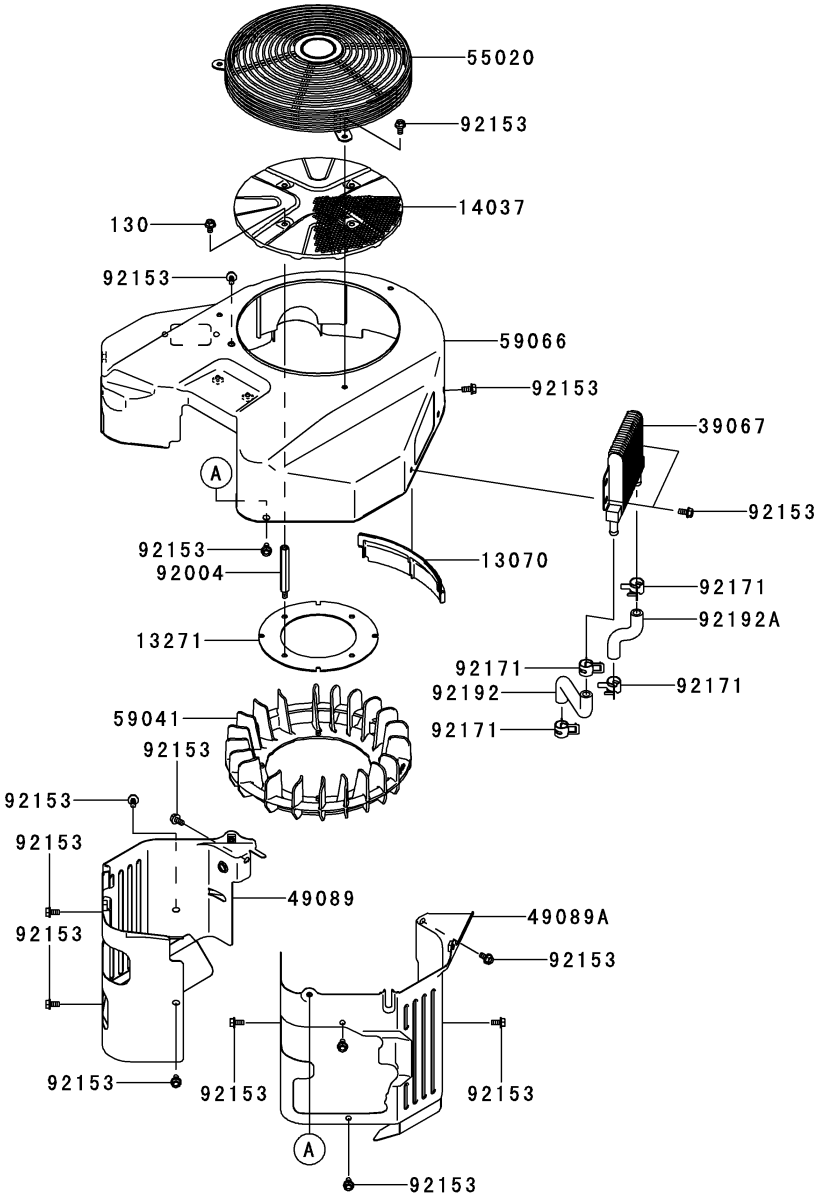

Ref.	Part Number	Description
13070	KM-13070-7013	Guide
13271	KM-13271-7035	PLate,Fan
14037	KM-14037-70299H	Screen
39067	KM-39067-7007	Cooler-Oil
49089	KM-490897087753	Shroud-Engine
49089A	KM-490897088753	Shroud-Engine
55020	KM-55020-70169H	Guard
59041	KM-59041-7019	Fan

Ref.	Part Number	Description
59066	KM-590667064753	Housing-Fan
92004	KM-92004-7021	Stud, Screen
92153	KM-92153-7043	Bolt, 6x12
92171	KM-92171-7015	Clamp
92192	KM-92192-7078	Tube
92192A	KM-92192-7079	Tube
130	KM-130AA0610	Bolt-Flanged, 6x10

FX1000 Kawasaki Electric Equipment

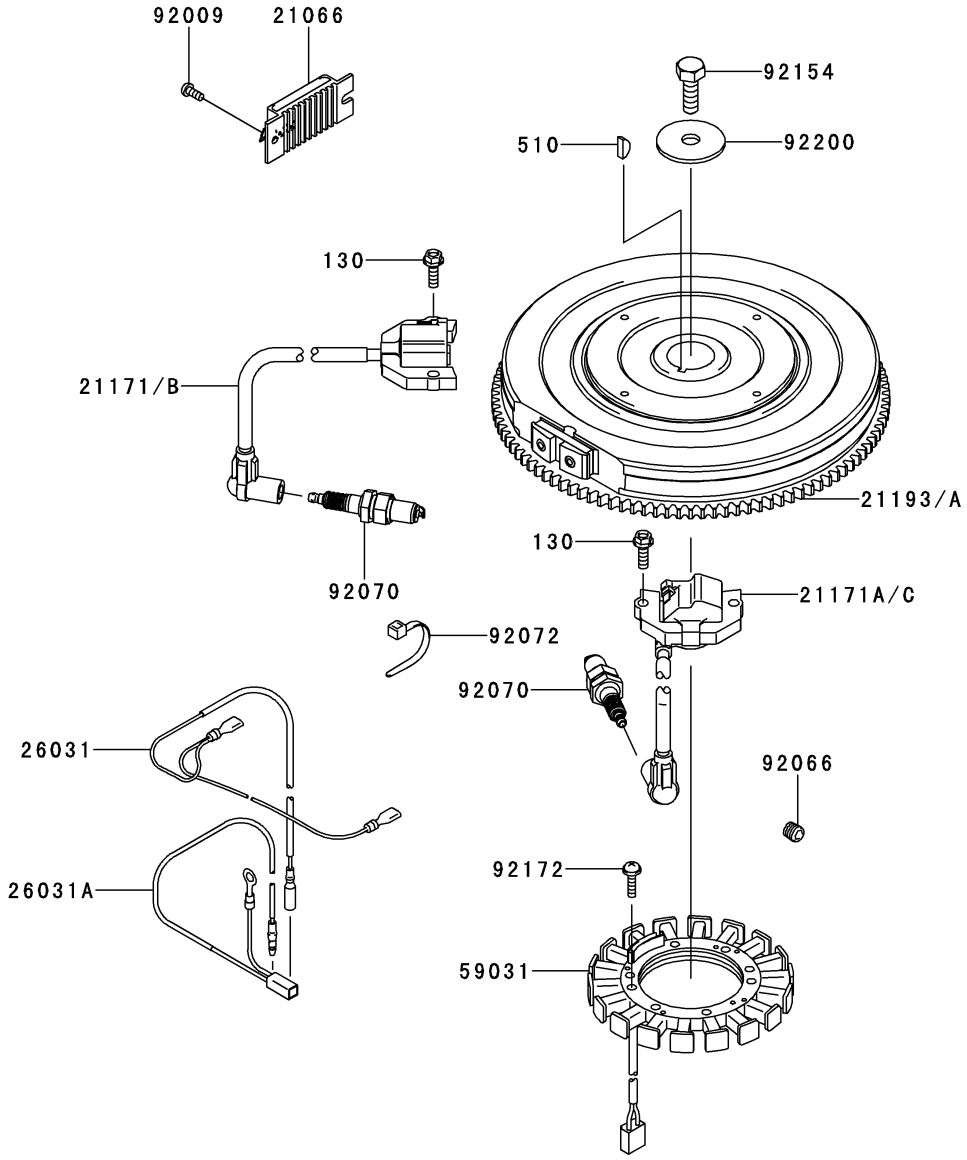

Ref.	Part Number	Description
21066	KM-21066-7011	Regulator-Voltage
21171	KM-21171-0711	Coil-Assy-Ignition
21171A	KM-21171-0712	Coil-Assy-Ignition
21193	KM-21193-0707	Flywheel-Assy
26031	KM-26031-7033	Harness
26031A	KM-26031-7034	Harness
59031	KM-59031-7015	Coil-Charging
92009	KM-92009-2308	Screw

Ref.	Part Number	Description
92066	KM-92066-7026	Plug
92070	KM-BPR5ES	Plug-Spark,BPR5ES,Solid
92072	KM-92072-7003	Band
92154	KM-92154-7003	Bolt,12x30
92172	KM-92172-7018	Screw, 5x20
92200	KM-92200-7040	Washer, 12.2x46x3
130	KM-130AA0620	Bolt-Flanged, 6x20
510	KM-510A5100	Key-Woodruff

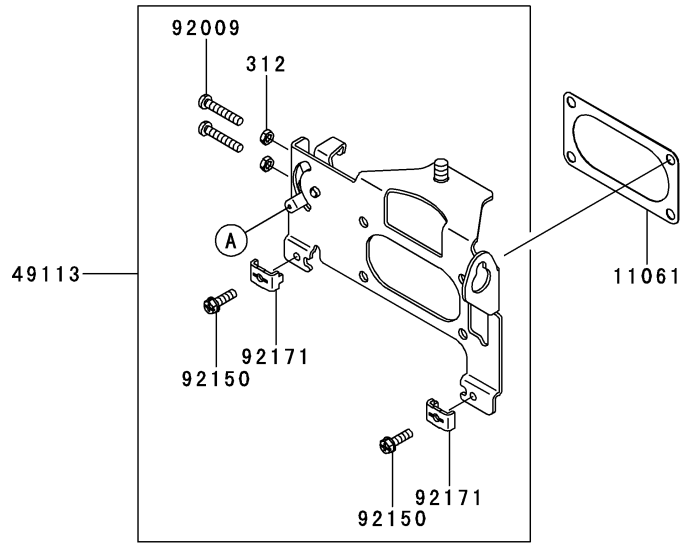

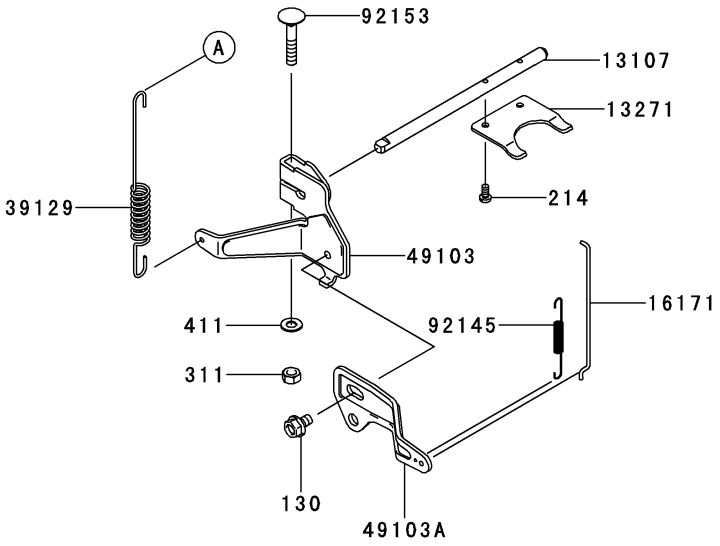

Ref.	Part Number	Description
11061	KM-11061-7056	Gasket,Pipe-Intake
13107	KM-13107-7050	Shaft
13271	KM-13271-7038	Plate
16171	KM-16171-7018	Link
39129	KM-39129-7027	Spring-Governor
49103	KM-49103-7009	Arm-Governor
49103A	KM-49103-7010	Arm-Governor
49113	KM-49113-7048	Panel-Comp-Control
92009	KM-92009-2381	Screw,5x30

Ref.	Part Number	Description
92145	KM-92145-7050	Spring
92150	KM-92150-2182	Bolt,5x18
92153	KM-92153-7033	Bolt,6x35
92171	KM-92171-7018	Clamp
130	KM-130BA0610	Bolt-Flanged, 6x10
214	KM-214AA0408	Screw-pan
311	KM-311AA0600	Nut-Hex, 6MM
312	KM-312AA0500	Nut-Hex, 5MM
411	KM-411AA0600	Washer-Plain, 6MM

FX1000 Kawasaki Carburetor

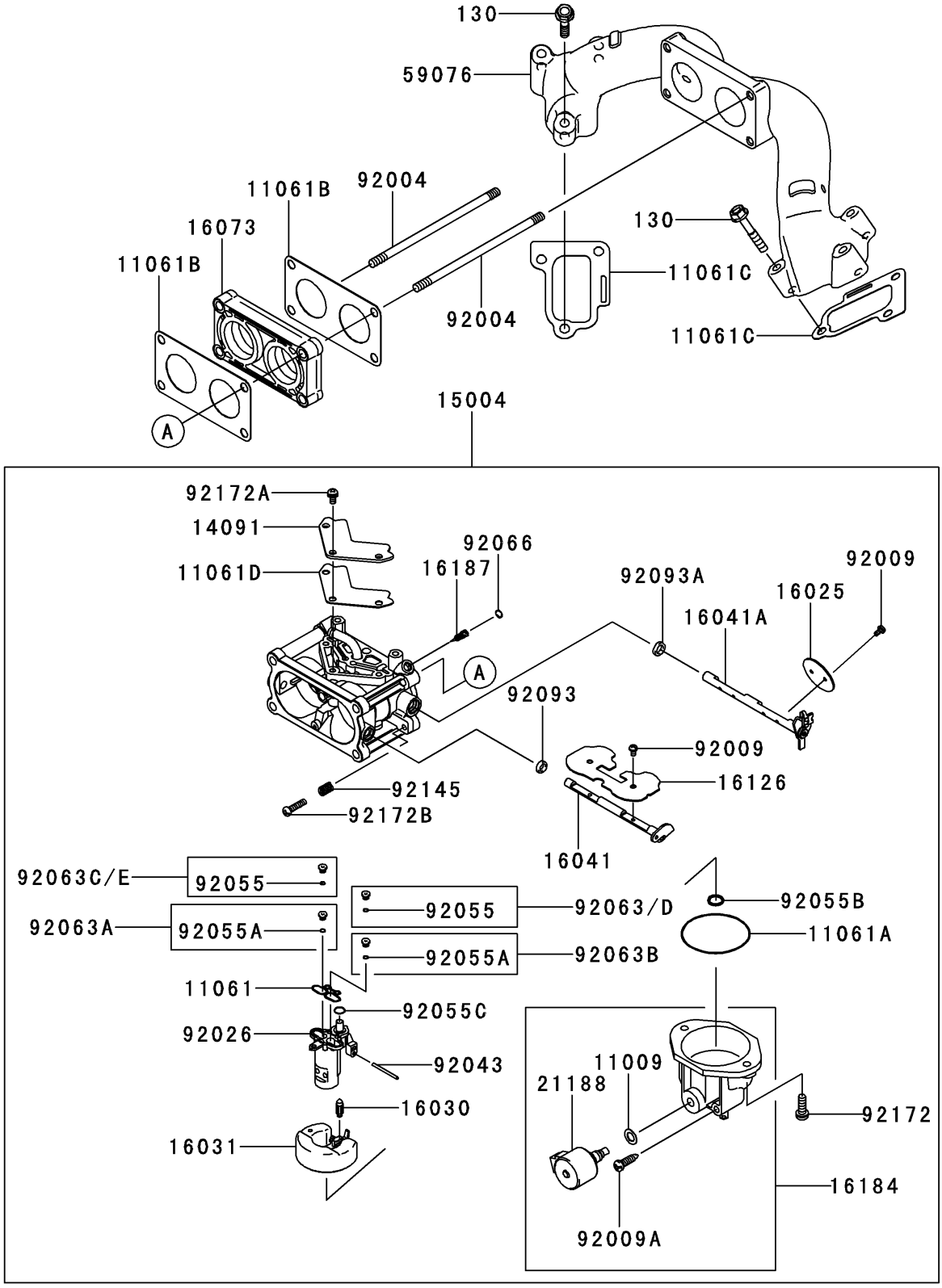

Ref.	Part Number	Description
11009	KM-11009-2056	Gasket
11061	KM-11061-7037	Gasket
11061A	KM-11061-7038	Gasket
11061B	KM-11061-7057	Gasket, Insulator
11061C	KM-11061-7062	Gasket, Manifoldr
11061D	KM-11061-7067	Gasket
14091	KM-14091-7059	Cover
15004	KM-15004-7037	Carburetor-Assy
16025	KM-16025-7012	Valve-Throttle
16030	KM-16030-7004	Valve-Float
16031	KM-16031-7003	Float
16041	KM-16041-7035	Shaft-Carburetor, Chock
16041A	KM-16041-7036	Shaft-Carburetor, Throttle
16073	KM-16073-7010	Insulator
16126	KM-16126-7019	Valve, Chock
16184	KM-16184-7023	Chamber-Assy-Float
16187	KM-16187-7005	Needle-Jet
21188	KM-21188-7003	Solenoid
59076	KM-59076-7012	Manifold-Intake
92004	KM-92004-7028	Stud, 6 x 120
92009	KM-92009-7003	Screw
92009A	KM-92009-7006	Screw, Drain
92026	KM-92026-7022	Spacer
92043	KM-92043-7014	Pin
92055	KM-92055-7013	Ring-O
92055A	KM-92055-7013	Ring-O
92055B	KM-92055-7016	Ring-O
92055C	KM-92055-7024	Ring-O
92063	KM-92063-7099	Jet-Main,#134
92063A	KM-92063-7099	Jet-Main, #134
92063B	KM-92063-7100	Jet-Main, #140
92063C	KM-92063-7101	Jet-Main, #131
92063D	KM-92063-7102	Jet-Main, #137
92063E	KM-92063-7103	Jet-Main, #128
92066	KM-92066-7009	Plug, Expansion
92093	KM-92093-7001	Seal, D=5.9
92093A	KM-92093-7002	Seal, D=6.9
92145	KM-92145-7039	Spring
92172	KM-92172-7005	Screw
92172A	KM-92172-7006	Screw
92172B	KM-92172-7031	Screw, Throttle Adjust
130	KM-130AA0635	Bolt-Flanged, 6x35

FX1000 Kawasaki Air-Filter/Muffler

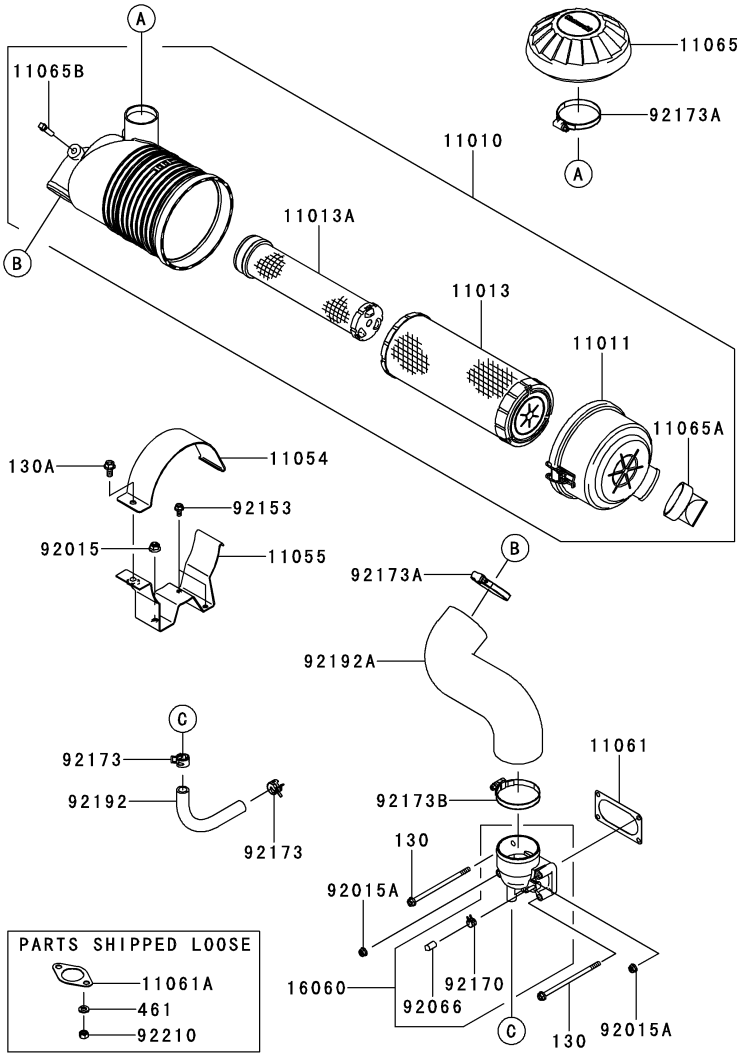

Ref.	Part Number	Description
11010	KM-11010-7028	Filter-Assy-Air
11011	KM-11011-7056	Case-Air Filter
11013	KM-11013-7044	Element-Air Filter
11013A	KM-11013-7045	Element-Air Filter
11054	KM-11054-70139X	Bracket
11055	KM-11055-70109H	Bracket
11061	KM-11061-7056	Gasket, Pipe-Intake
11061A	KM-11061-7061	Gasket, Muffler
11065	KM-11065-7025	Cap
11065A	KM-11065-7031	Cap
11065B	KM-11065-7032	Cap
16060	KM-16060-0727	Pipe-Intake
92015	KM-92015-1143	Nut

Ref.	Part Number	Description
92015A	KM-92015-1367	Nut
92066	KM-92066-0095	Plug
92153	KM-92153-7043	Bolt, 6 x 12
92170	KM-92170-2042	Clamp
92173	KM-92173-7003	Clamp
92173A	KM-92173-7010	Clamp
92173B	KM-92173-7011	Clamp
92192	KM-92192-7075	Tube
92192A	KM-92192-7166	Tube
92210	KM-92210-7027	Nut, M8
130	KM-130AA06120	Bolt, Flanged, 6x120
130A	KM-130AA0816	Bolt, Flanged, 8x16
461	KM-461DA0800	Washer-Spring, 8MM

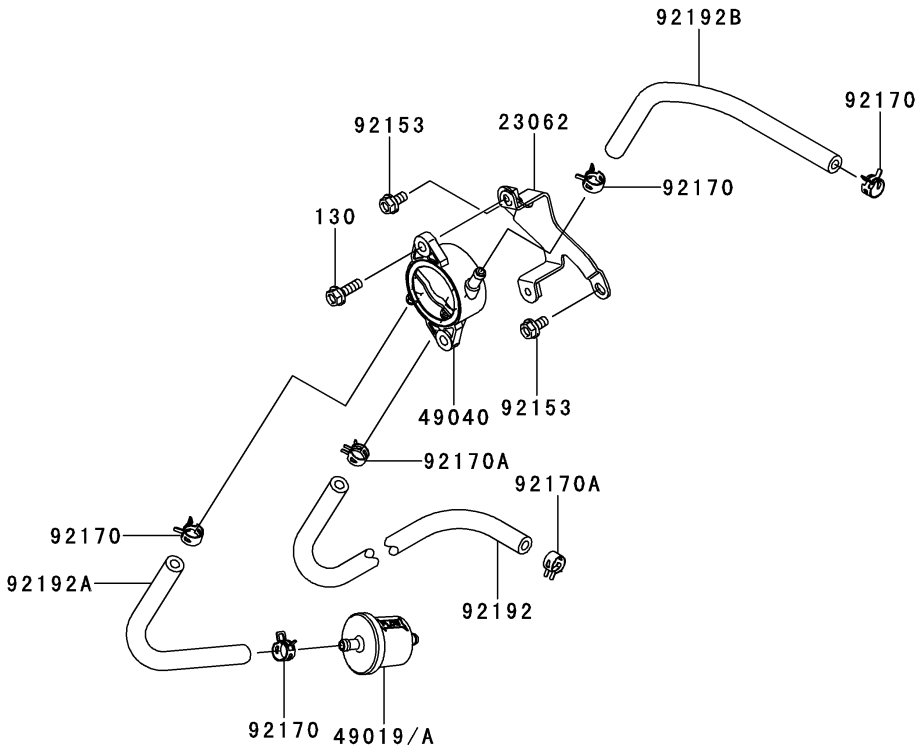

Ref.	Part Number	Description
23062	KM-23062-7020	Bracket-Comp
49019	KM-49019-0707	Filter-Fuel
49040	KM-49040-7006	Pump-Fuel
92153	KM-92153-7043	Bolt, 6 x 12
92170	KM-92170-2088	Clamp
92170A	KM-92170-2088	Clamp
92192	KM-92192-7077	Tube, 6.4 x 12.7x318
92192A	KM-92192-7172	Tube, 6.35x12.7x185
92192B	KM-92192-7177	Tube, 6.35x12.7x230
130	KM-130AA0620	Bolt-Flanged, 6x20

FX1000 Kawasaki Starter

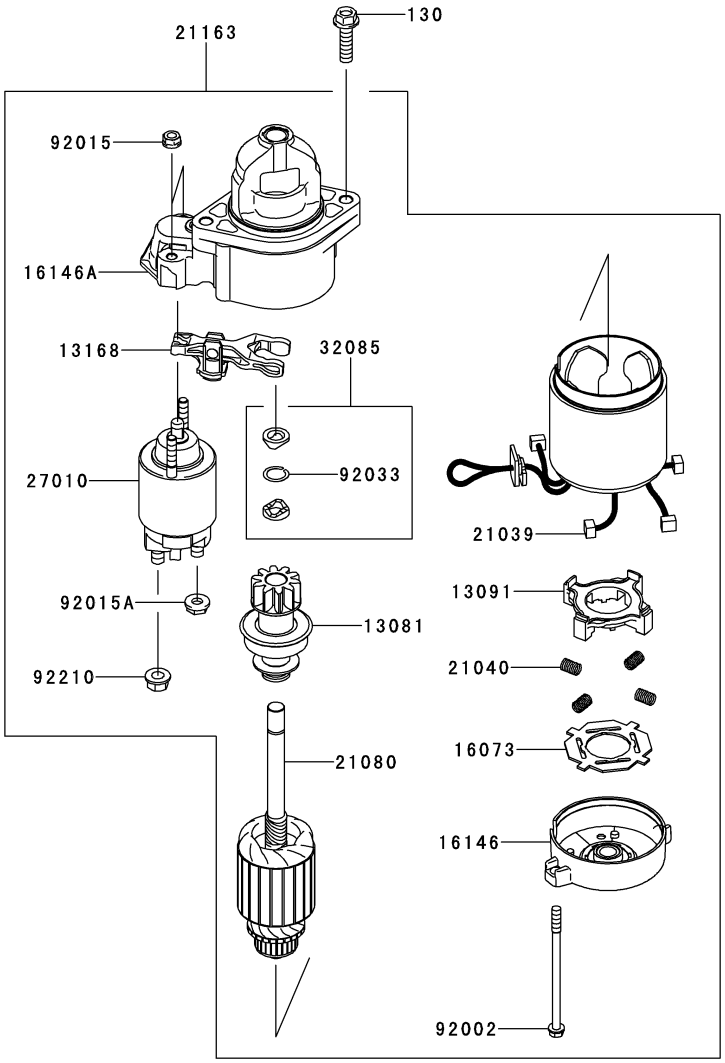

Ref.	Part Number	Description
13081	KM-13081-7002	Clutch-Assy
13091	KM-13091-2068	Holder, Brush
13168	KM-13168-2148	Lever, Shift
16073	KM-16073-2098	Insulator
16146	KM-16146-2077	Cover-Assy
16146A	KM-16146-7029	Cover-Assy
21039	KM-21039-2059	Brush
21040	KM-21040-2052	Spring-Brush
21080	KM-21080-2058	Armature

Ref.	Part Number	Description
21163	KM-21163-7025	Starter-Electric
27010	KM-27010-7005	Switch
32085	KM-32085-2097	Stopper
92002	KM-92002-2277	Bolt
92015	KM-92015-2146	Nut
92015A	KM-92015-2147	Nut
92033	KM-92033-2081	Ring-Snap
92210	KM-92210-2085	Nut
130	KM-130AA0830	Bolt-Flanged, 8x30

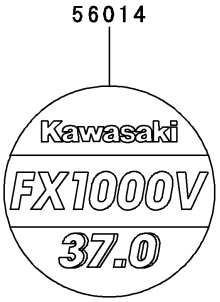

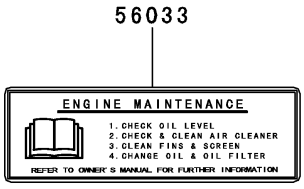



Ref.	Part Number	Description
56014	KM-56014-7001	Emblem
56033	KM-56033-7001	Label-Manual
56070	KM-56070-7001	Label-Warning



To order replacement parts, call a Customer Support Representative at (800) 965-4CUB.
Locate your nearest Cub Cadet dealer at (877) 282-8684
or visit www.cubcadet.com to find the nearest Cub Cadet dealer in your area.

CUB CADET LLC, P.O. BOX 361131 CLEVELAND, OHIO 44136-0019