Cub Cadet®

Illustrated Parts Manual

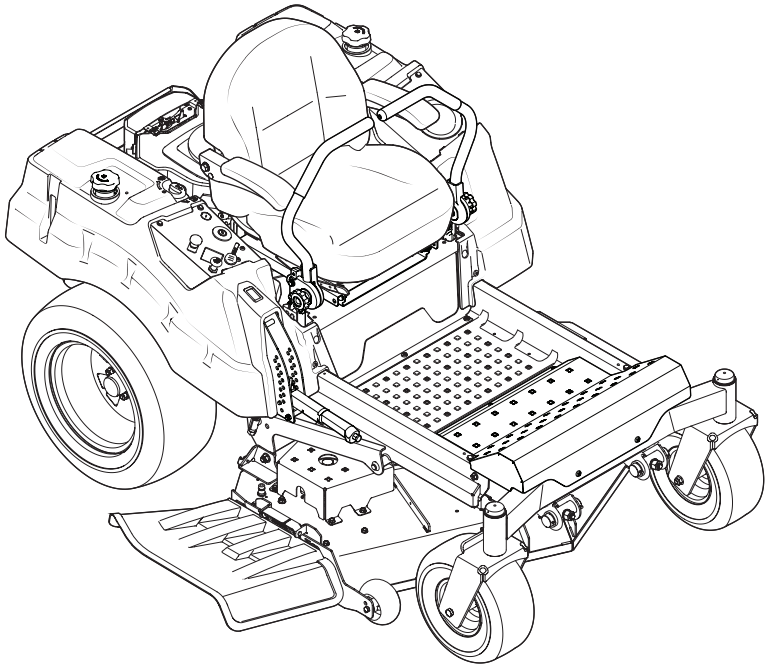

Z-Force LZ 48/60 Commercial

CUB CADET LLC, P.O. BOX 361131 CLEVELAND, OHIO 44136-0019

Printed In USA

Form No. 769-09644
January 13, 2014

To The Owner

Thank You

Thank you for purchasing a Cub Cadet Zero-Turn Tractor. It was carefully engineered to provide excellent performance when properly operated and maintained.

All information in this manual is relative to the most recent product information available at the time of printing. Please be aware that this Illustrated Part's Manual may cover a range of product specifications for various models.

Components listed and/or illustrated in this manual may not be applicable to all models. We reserve the right to change product specifications, designs and equipment without notice and without incurring obligation.

Throughout this manual, all references to *right* (RH) and *left* (LH) are observed from the operating position.

Table of Contents

Frame 3
Drive System 4
Deck Lift 6
Engine Accessories (Kohler Confidant)..... 8
Engine Accessories (Kohler Command)..... 10
Operator's Platform..... 12
Front Axle..... 14
Seat Adjustment..... 15
Fuel Tank..... 16
Electrical..... 17
Controls..... 18
48" Deck..... 20
60" Deck..... 22
Wiring Harness Schematic - 725-06171..... 24
Labels 25
LH Transmission 618-06015B 26
RH Transmission 618-06016B..... 28
Kohler ZT730-3011 Crankcase..... 30
Kohler CV732-3015 Crankcase 46

Record Product Information

To ease in ordering replacement parts, please locate the model plate on the equipment and record the information in the provided area to the right. You can locate the model plate by looking beneath the seat.

Model Number

Serial Number

Painted Parts

When ordering painted service parts, a four digit color suffix must be added to the part number (e.g. 783-XXXXX-0637). Please refer to the table below for current color codes:

0637	Black
4021	Yellow (Cub Cadet)
0499	Beige (Cub Cadet)
0685	Blue (Cub Cadet)
0691	Black Jack (Cub Cadet Commercial)

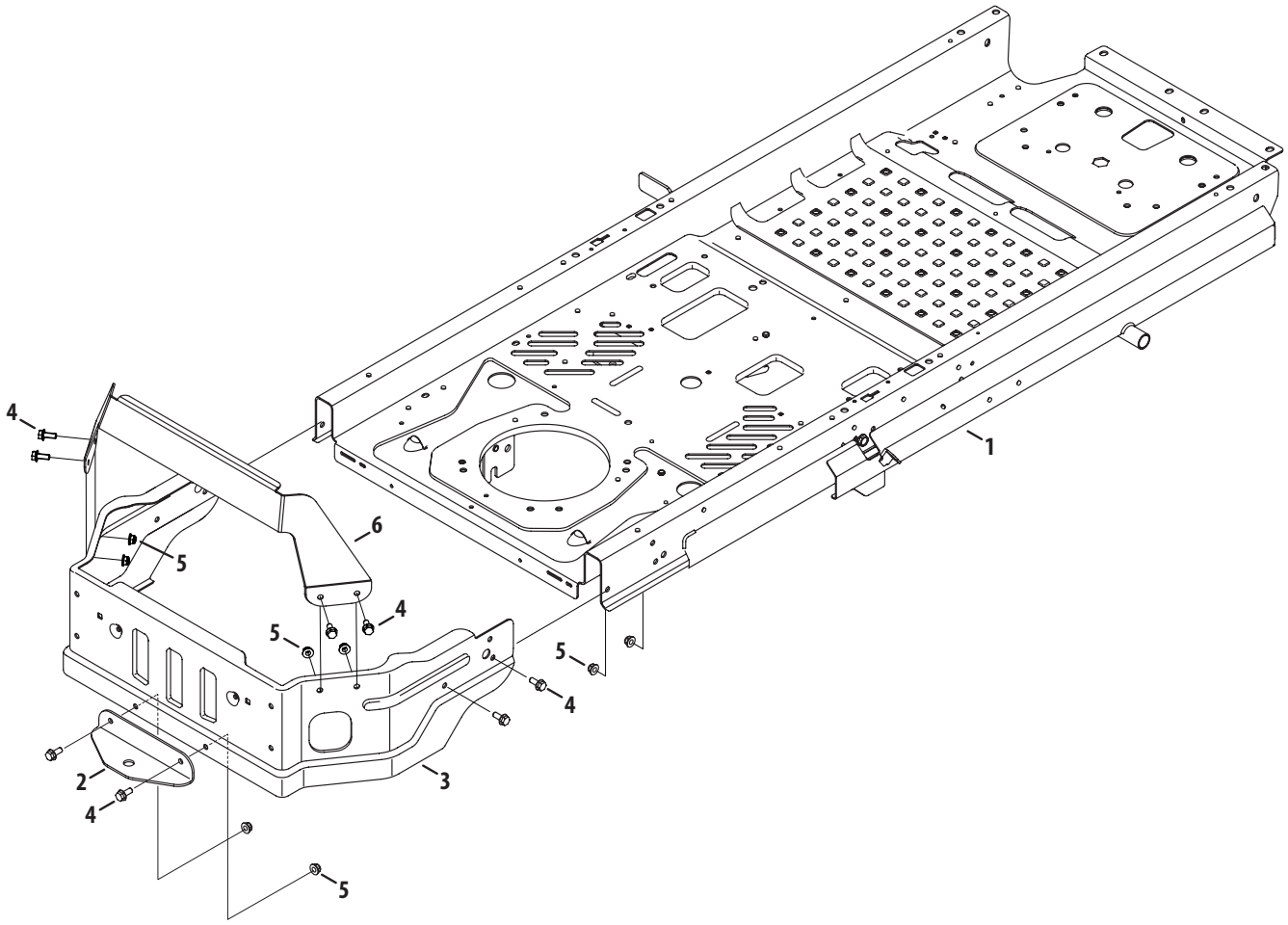

Ref	Part Number	Description
1	603-04982	Frame Assembly
2	703-07543C	Hitch Bracket
3	703-09302A	Rear Bumper
4	710-04043	Screw, 5/16-18, Hexflange
5	712-04063	Flange Lock Nut, 5/16-18
6	703-09584	Upper Bumper Bracket

Drive System

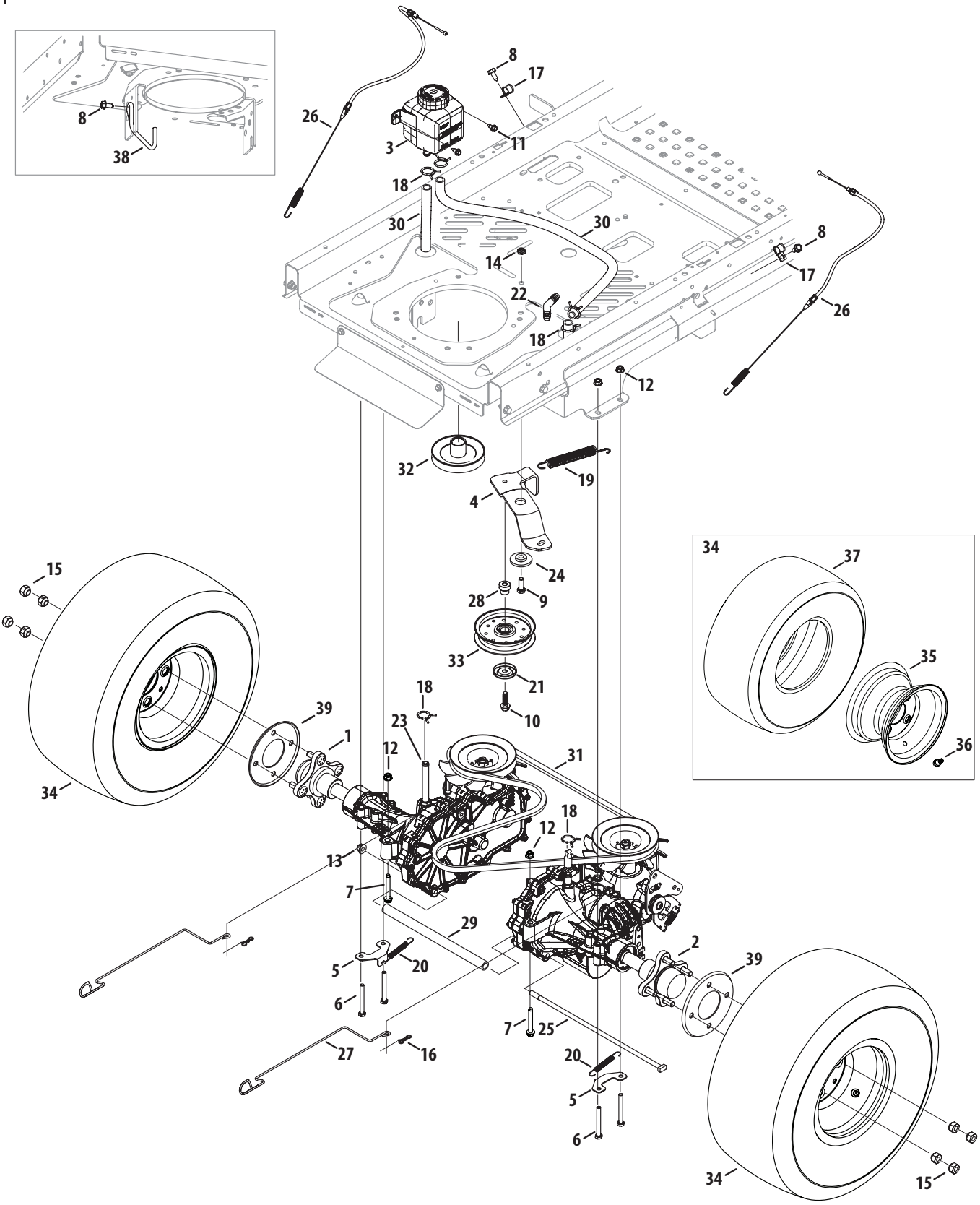

Ref.	Part Number	Description
1	918-06015B	Transmission Assembly, LH
2	918-06016B	Transmission Assembly, RH
3	631-04286	Expansion Tank Assembly
4	703-08605	Idler Bracket
5	703-09323	Brake Mounting Bracket
6	710-0176	Hex Screw, 5/16-18 x 2.75
7	710-04389	Screw, TT, 5/16-18 x 2.25
8	710-04484	Hex Washer Screw, 5/16-18 x .750
9	710-0514	Hex Screw, 3/8-16 x 1.00
10	710-1315	Hex Washer Screw, 3/8-16 x 1.250
11	710-1652	Hex Washer Screw, 1/4-20 x .625
12	712-04063	Flange Lock Nut, 5/16-18
13	712-04065	Flange Lock Nut, 3/8-16
14	912-3020	Jam Lock Nut, 3/8-16
15	712-3050	Lug Nut, 7/16-14
16	714-04040	Bow-Tie Cotter Pin
17	726-0272	Clamp 9/16 Dia.
18	726-04118	Hose Clamp, .875
19	732-04229	Extension Spring, .75 Dia. x 6.02
20	732-04488	Extension Spring, .38 OD x 3.25 LG
21	783-08389	Pulley Cap
22	737-04342	Elbow, 90
23	737-05023	Fitting, 9/16, Barb
24	738-04162C	Shoulder Spacer, .884 x .190
25	738-04251A	Rod, .337 Dia. x 14.75 LG
26	946-05068	Park Brake Cable
27	747-05657A	Bypass Rod
28	748-05029	Shoulder Spacer
29	750-06147A	Spacer, .75 OD x 11.31 LG
30	751-14485-32	Fuel Hose, 1/2 ID
31	954-04317A	Belt, A-Type x 67.0
32	756-05001	Engine Pulley
33	756-05042	Idler Pulley, 4.25 Dia.
34	634-05114	Complete Wheel, 22 x 13-6.5
35	634-05112-0499	Rim Only
36	934-0255	Valve Tubeless
37	734-04580	Tire Only
38	747-06070	Engine Keeper Rod
39	703-06936	Reinforcement Plate

Deck Lift

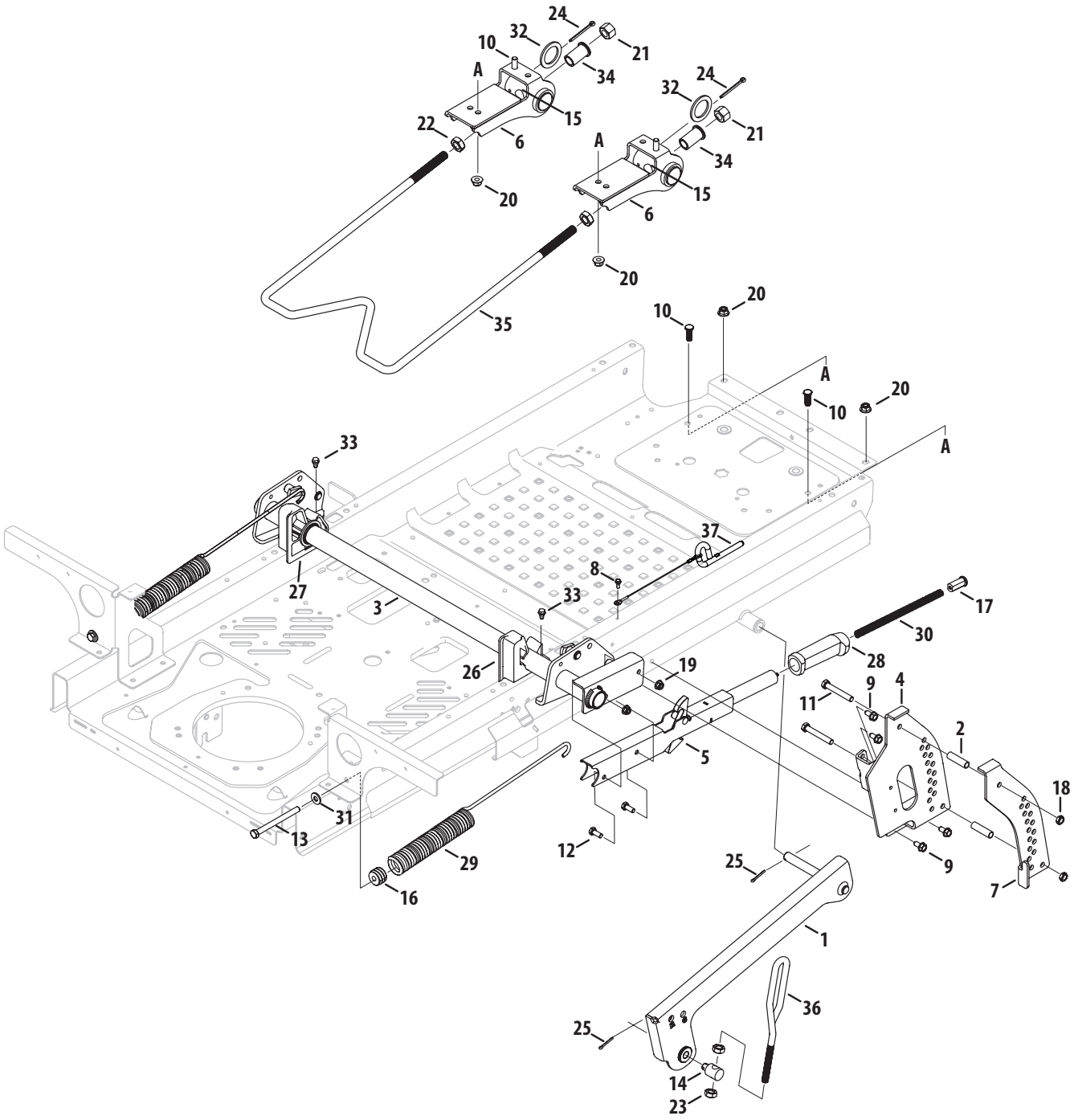

24
32
10
21
34
A
15
22
6
20
24
32
21
34
A
15
6
20
35
10
20
A
10
20
A
33
37
8
27
3
33
17
30
28
26
19
9
4
11
2
5
18
31
13
12
29
25
9
7
16
1
36
25
14
23

Ref	Part Number	Description
1	603-05086	Lift Arm, RH
	603-05087	Lift Arm, LH
2	750-06031	Spacer, .386 x .63 x 1.75
3	603-05088	Deck Lift Shift Assembly
4	603-05092	Index Bracket Assembly
5	903-05143	Latch Handle Assembly
6	703-09306	Deck Hanger Bracket
7	703-09309A	Outer Index Bracket
8	910-0224	Screw, #10-16, .50
9	710-04484	Hex Washer Screw, 5/16-18 x .750
10	710-0514	Hex Screw, 3/8-16 x 1.00
11	710-0859	Hex Head Screw, 3/8-16 x 2.50
12	710-3008	Hex Cap Screw, 5/16-18 x .75
13	710-3279	Hex Screw, 3/8-16 x 4.25
14	711-06284	Ferrule, .496 x .528
15	711-06216A	Pivot Pin, 1.25
16	711-0635	Spring Insert
17	711-0642A	Handle Button
18	712-0266A	Jam Lock Nut, 3/8-16

Ref	Part Number	Description
19	712-04063	Flange Lock Nut, 5/16-18
20	712-04217	Flange Lock Nut, 3/8-16
21	712-05045A	Nylock Nut, 5/8-11
22	912-3015	Jam Nut, 5/8-11
23	912-3048	Nut, Jam, 1/2-13
24	714-0211	Cotter Pin, 3/16 x 2.0
25	914-0470	Cotter Pin 1/8 x 1.25
26	731-09683	Deck Lift Bracket
27	731-09707	Deck Lift Bracket, LH
28	731-3158	Grip, Deck Lift Handle
29	732-05096	Extension Spring, 1.485 OD x 17.58
30	732-3097	Spring, Compression, .4 x 8.52
31	736-0262	Flat Washer, .385 x .870 x .092
32	736-05070	Flat Washer, 1.875 x 1.38 x .097
33	738-04278	Shoulder Screw, .500 x 1/4-20
34	741-05075A	Flange Bearing, .875 x .702 x 1.10
35	747-05725A	Deck hanger Rod, 5/8
36	747-06259A	Lift Adjust Link
37	747-06355	Lock Rod, .375

Engine Accessories (Kohler Confidant)

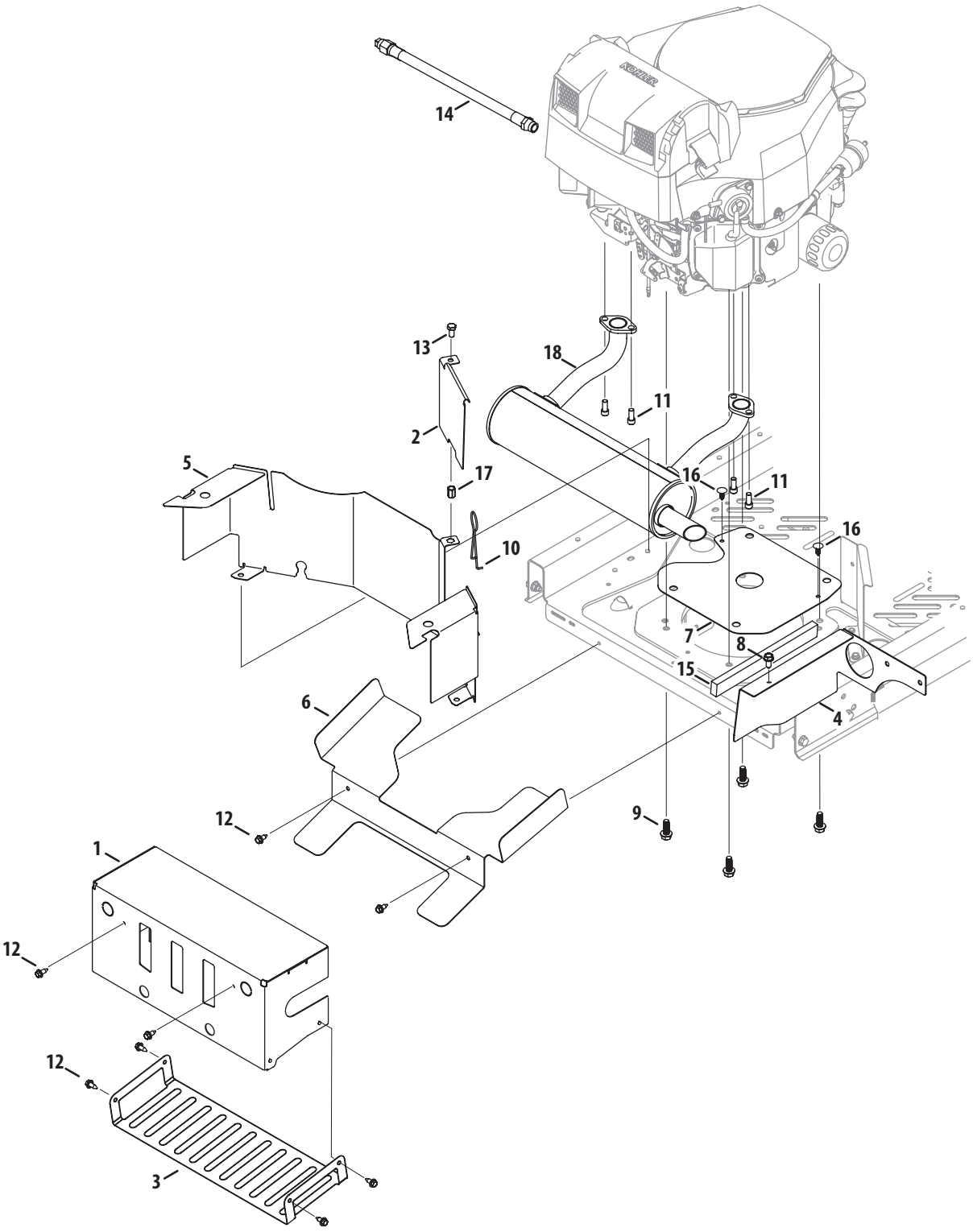

Ref.	Part Number	Description
1	603-05169	Muffler Shield Bracket
2	703-09693	Engine Shield Bracket
3	703-09700	Lower Muffler Shield Bracket
4	703-09706	Pod Shield Bracket, RH
5	703-09718	Engine Shield Bracket
6	703-09752	Muffler Mounting Bracket
7	703-09796	Engine Shield Plate
8	710-04484	Hex Washer Screw, 5/16-18 x .750
9	710-04683A	Screw, 3/8-16 x 1.00
10	747-06306	Tank Support Rod
11	710-1314A	Socket Head Screw, 5/16-18 x .750
12	710-1652	Hex Washer Screw, 1/4-20 x .625
13	710-3025	Hex Cap Screw, 5/16-18 x .625
14	751-10291A	Oil Drain Hose
15	721-04713	Foam Tape, 1.00 x .500 x 9.375
16	726-3046	Ratchet Clip, .250
17	728-05012	Nut, 5/16-18
18	751-11879B	Twin Muffler

Engine Accessories (Kohler Command)

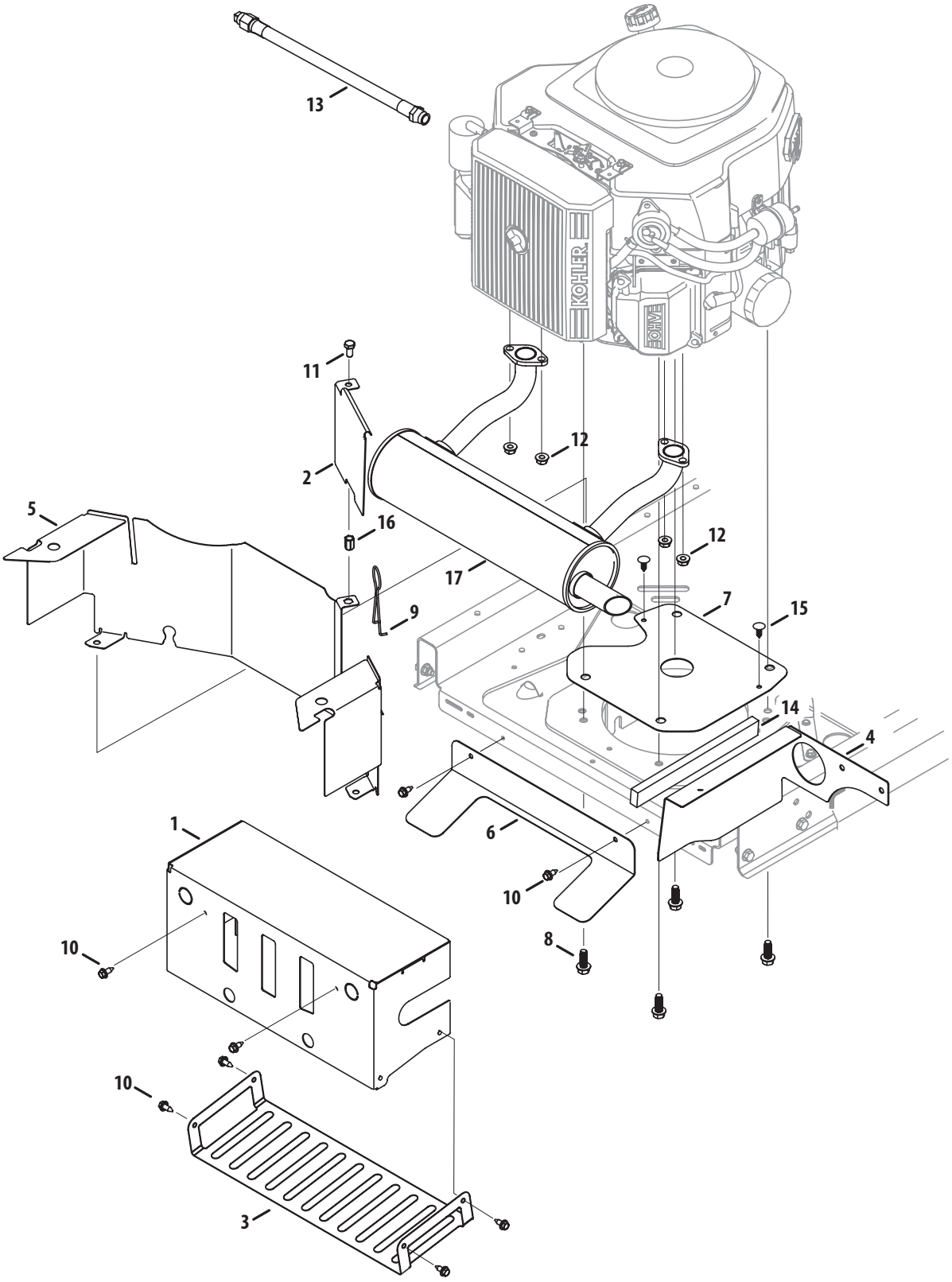

Ref.	Part Number	Description
1	603-05169	Muffler Shield Bracket
2	703-09693	Engine Shield Bracket
3	703-09700	Lower Muffler Shield Bracket
4	703-09706	Pod Shield Bracket, RH
5	703-09718	Engine Shield Bracket
6	703-09768	Muffler Shield Bracket
7	703-09796	Engine Shield Plate
8	710-04683A	Screw, 3/8-16 x 1.00
9	747-06306	Tank Support Rod
10	710-1652	Hex Washer Screw, 1/4-20 x .625
11	710-3025	Hex Cap Screw, 5/16-18 x .625
12	712-04312	Nut, M8-1.25, Hex Flange
13	751-10291A	Oil Drain Hose
14	721-04713	Foam Tape, 1.00 x .500 x 9.375
15	726-3046	Ratchet Clip, .250
16	728-05012	Nut, 5/16-18
17	751-11879B	Twin Muffler

Operator's Platform

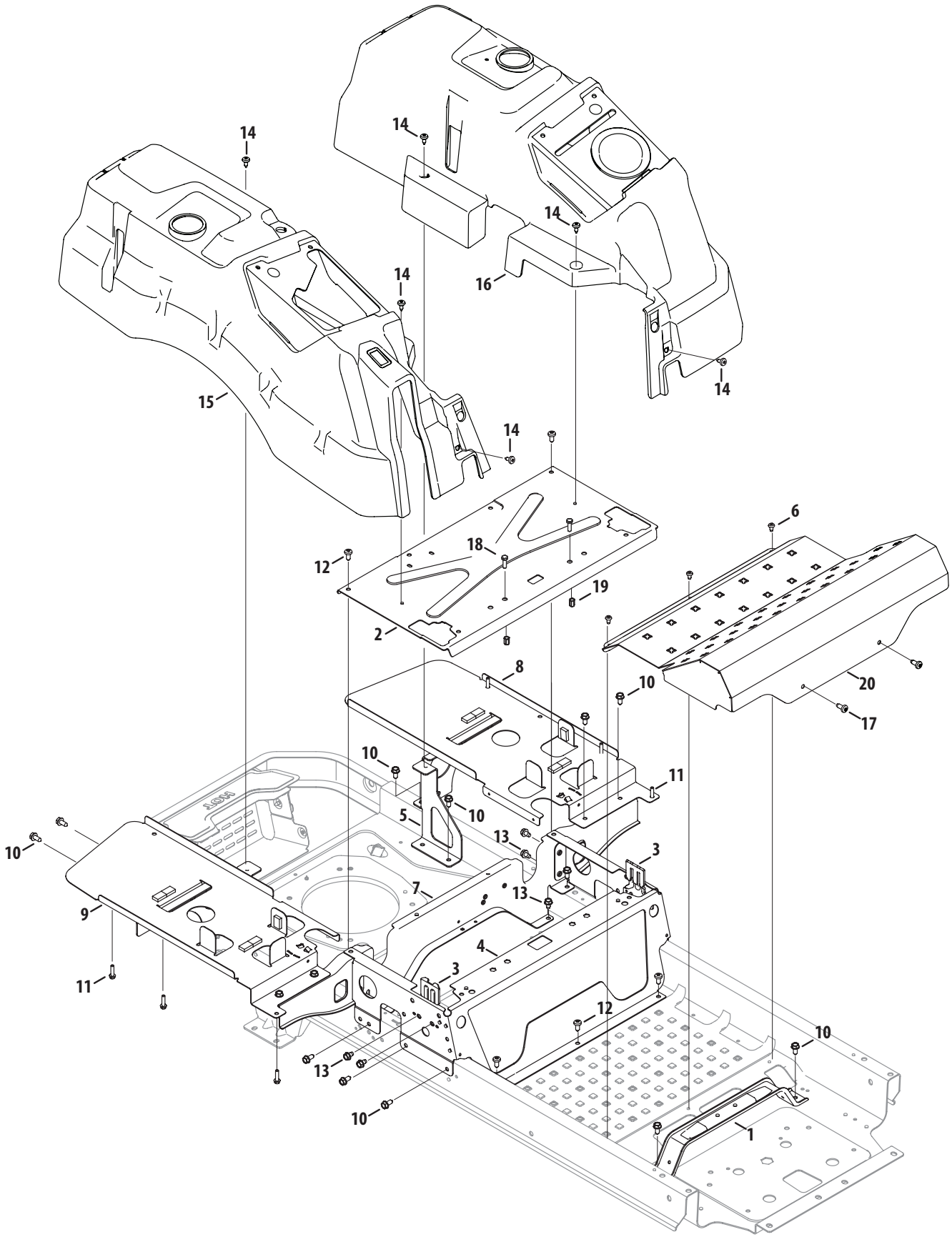

Ref.	Part Number	Description
1	703-08620A	Steering Support Bracket
2	703-09045B	Seatbox Plate
3	703-09211A	Lapbar Brace Bracket
4	703-09320	Seat Frame
5	703-09326	Rear Support Bracket, LH
	703-09330	Rear Support Bracket, RH
6	710-04483	Screw, 1/4-20 x .50
7	703-09332A	Rear Seatbox Brace
8	703-09404A	Tank Support Plate, LH
9	703-09775	Tank Support Plate, RH
10	710-04484	Hex Washer Screw, 5/16-18 x .750
11	710-05109	Hex Washer Screw, 5/16-14 x 1.00
12	710-05424	Self Tapping Screw, 5/16-18 x .750
13	710-0607	Hex Washer Screw, 5/16-18 x .50
14	738-04549A	Shoulder Screw, 1/4-20
15	931-09529	RH Console
16	931-09543	LH Console
17	710-1611B	Screw, 5/16-18 x .75
18	710-0643	Hex Cap Screw, 5/16-18 x 1.00
19	728-04068	Nut, 5/16-18
20	603-05094	Floor Board, Fab

Front Axle

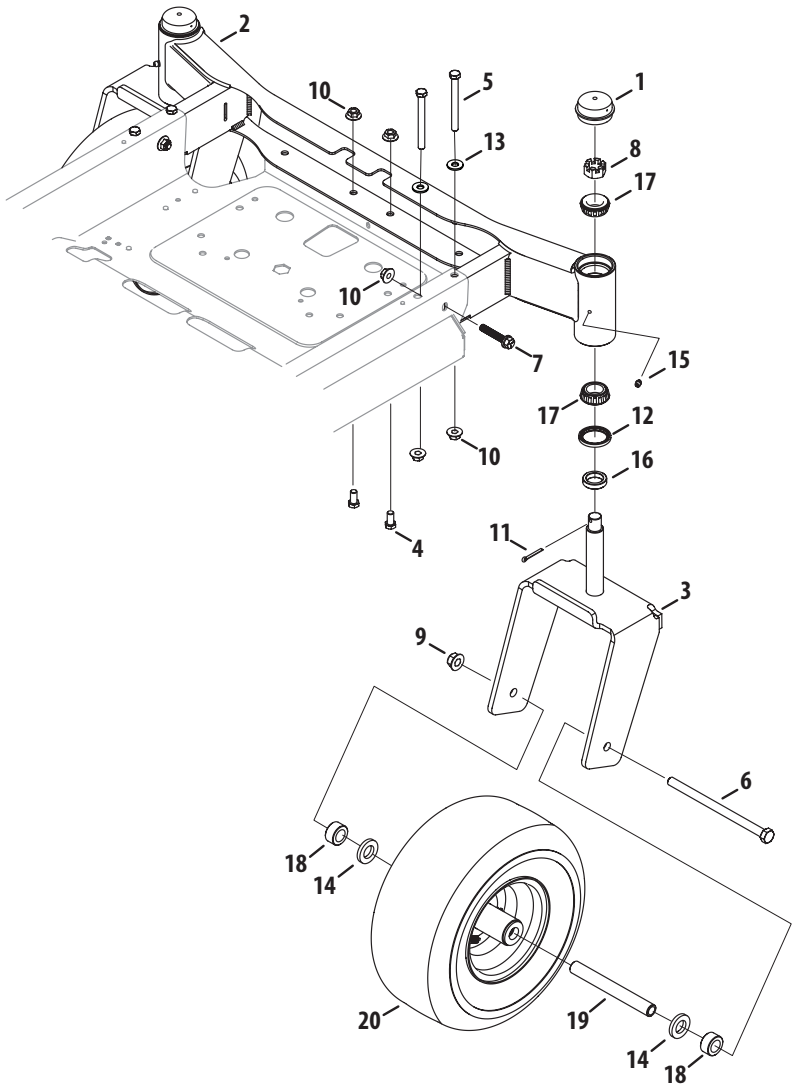

Ref.	Part Number	Description
1	01006347	Cap
2	603-05136	Front Axle
3	603-05148	Caster Wheel Bracket
4	710-0216	Hex Cap Screw, 3/8-16 x .75
5	710-04576	Hex Cap Screw, 3/8-16 x 3.75
6	710-04999	Hex Cap Screw, 1/2-13 x 8.50
7	710-06093	Hex Flange Screw, 3/8-16 x 2.00
8	712-0359	Slotted Nut, 3/4-16
9	712-04150	Flange Lock Nut, 1/2-13
10	712-04217	Flange Lock Nut, 3/8-16

Ref.	Part Number	Description
11	714-0162	Cotter Pin, 5.32 x 1.25
12	721-04656	Seal, 35 x 47 x 5
13	736-0262	Flat Washer, .385 x .870 x .092
14	936-0445	Thrust Washer, .760 x 1.50 x .060
15	937-3000	Grease Fitting, 3/16
16	750-06085	Seal, 1.378 x .984 x .329
17	741-05055	Bearing, 47mm x 25mm x 15mm
18	748-04068	Spacer, .77 ID x 1.13 OD x .56
19	750-05351	Spacer, .51 ID x .75 OD x 7.10
20	634-04750	Wheel Assembly, 13 x 6.5 x 6

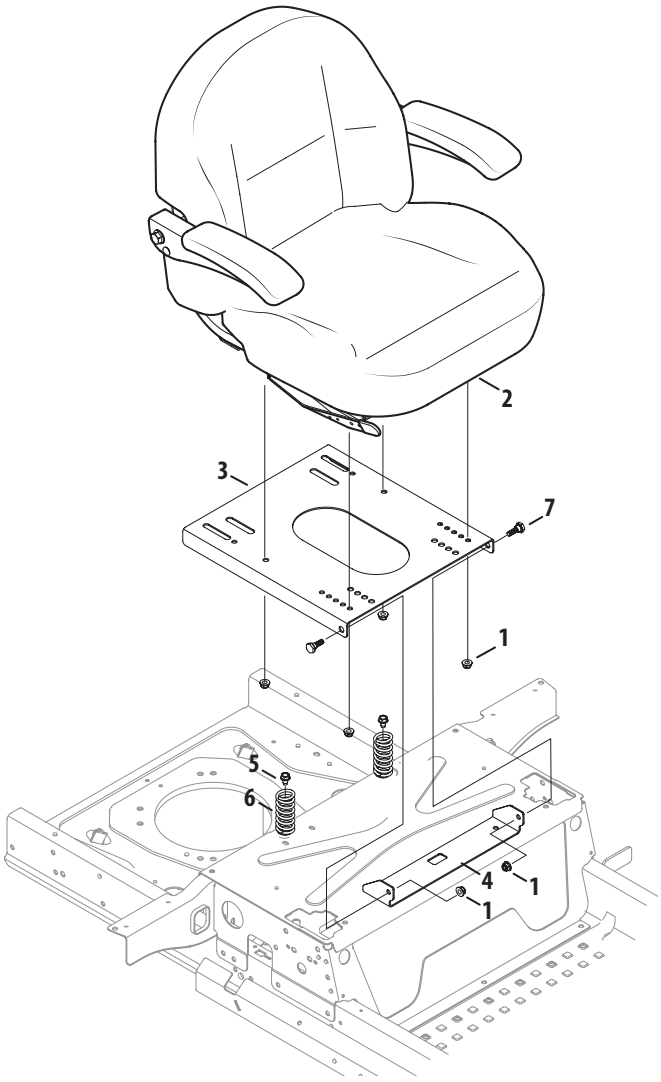

Ref.	Part Number	Description
1	712-04063	Flange Lock Nut, 5/16-18
2	757-05005A	Seat
3	703-09603	Seat Plate
4	703-09633	Seat Bracket
5	710-1260A	Hex Washer Screw, 5/16-18 x .750
6	732-04035	Compression Spring, 1.28 x 3.125
7	938-0296	Shoulder Screw, 5/16-18 x .437 x .268

Fuel Tank

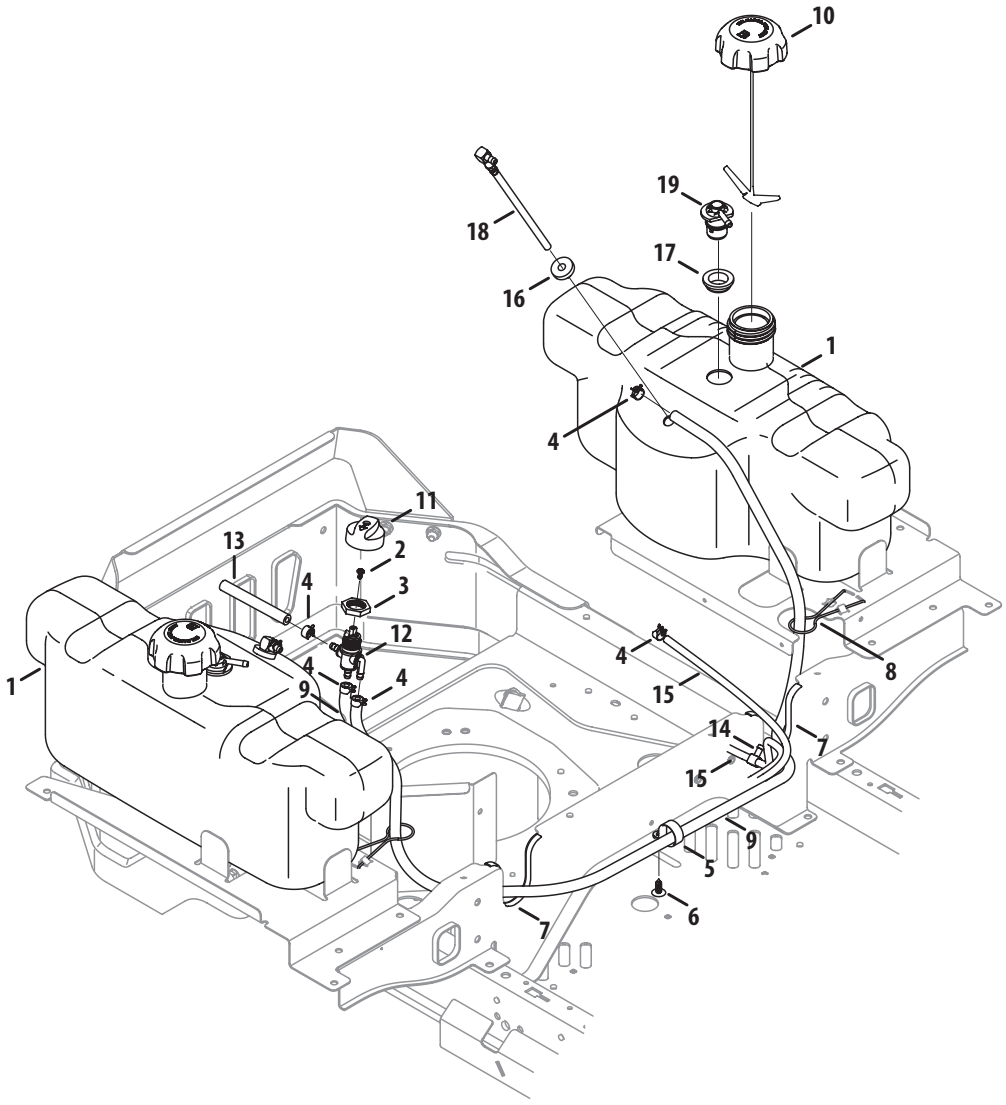

Ref.	Part Number	Description
1	951-05137	Fuel Tank
2	710-06152	Screw, M4-0.7 x 8mm
3	712-05048	Nut, 3 Way Select
4	726-0205	Hose Clamp, .490 Dia.
5	726-04119	Hose Clamp, 1.0
6	726-3046	Ratchet Clip, .250
7	731-0511	Trim Strip
8	747-06306	Tank Support Rod
9	751-10349-54	Fuel Hose, Low Permeation, 1/4
10	951-12179B	Fuel Cap

Ref.	Part Number	Description
11	951-14488	Fuel Cap, 3 Way
12	751-14526	Fuel Switch
13	751-10349-6	Fuel Hose, Low Permeation, 1/4
14	737-04341	Tee Fitting
15	751-12089-65	Vent Hose
16	935-0149	Fuel Tank Bushing
17	735-04081	Rubber Grommet
18	751-10442	Fuel Pickup Fitting
19	751-12118	Rollover Valve

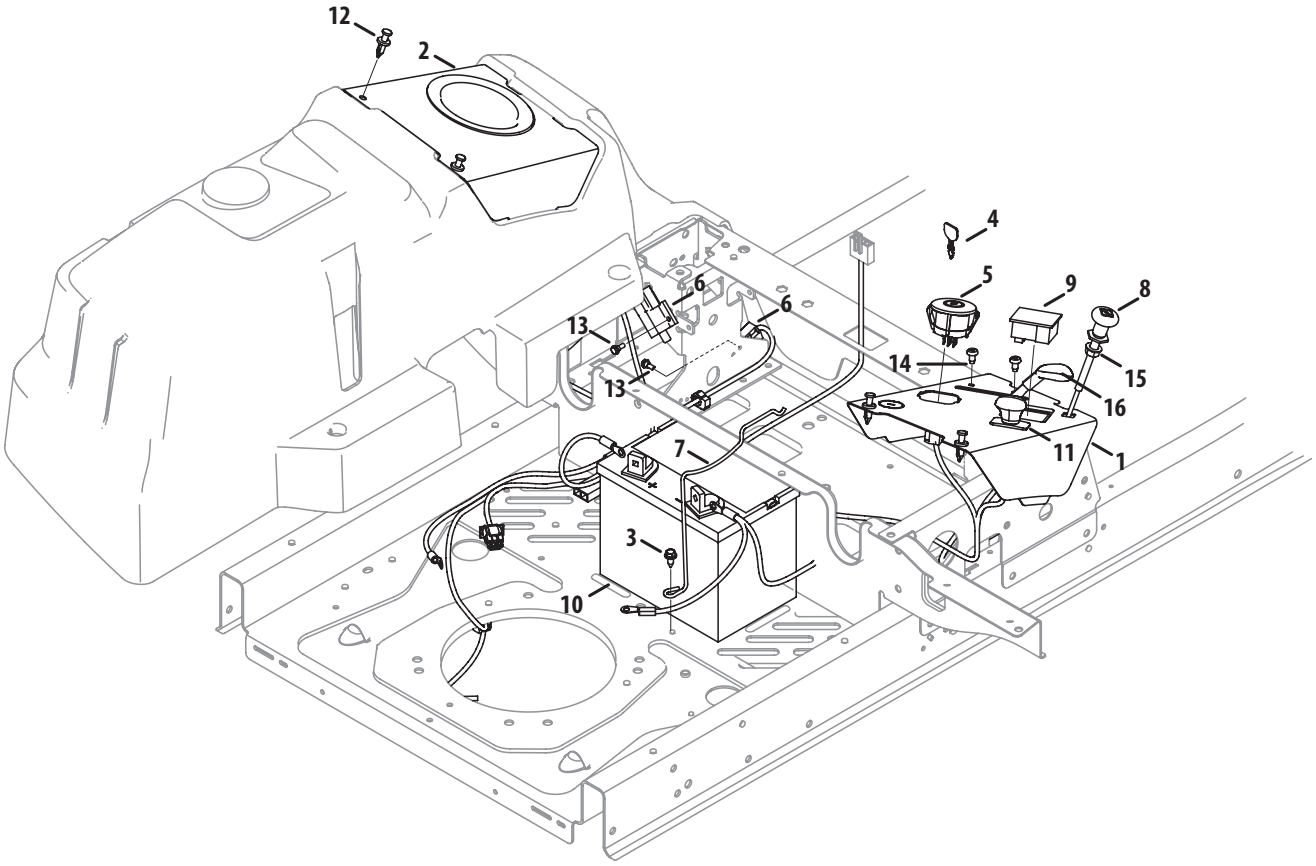

Ref.	Part Number	Description
1	703-09337A	Console Cover, RH
2	703-09338A	Console Cover, LH
3	710-1652	Hex Washer Screw, 1/4-20 x .625
4	625-05000	Key, Assembly
5	925-04228	Key Switch
6	725-04363	Interlock Switch
7	747-05685	Battery Rod
8	946-04214	Choke Cable
9	925-06154	Hour Meter/Service Minder

Ref.	Part Number	Description
10	925-1707D	Battery
11	925-3233	Electric PTO Switch
12	728-0199	Plastic Rivet
13	738-04237A	Shoulder Screw, #10-32 x .500
14	710-05070	Screw, 1/4-20 x .50
15	912-3005	Flange Lock Nut, 3/8-16
16	946-05133	Throttle Cable, Confidant
	946-05101	Throttle Cable, Command
—	925-06171	Harness Assembly

Controls

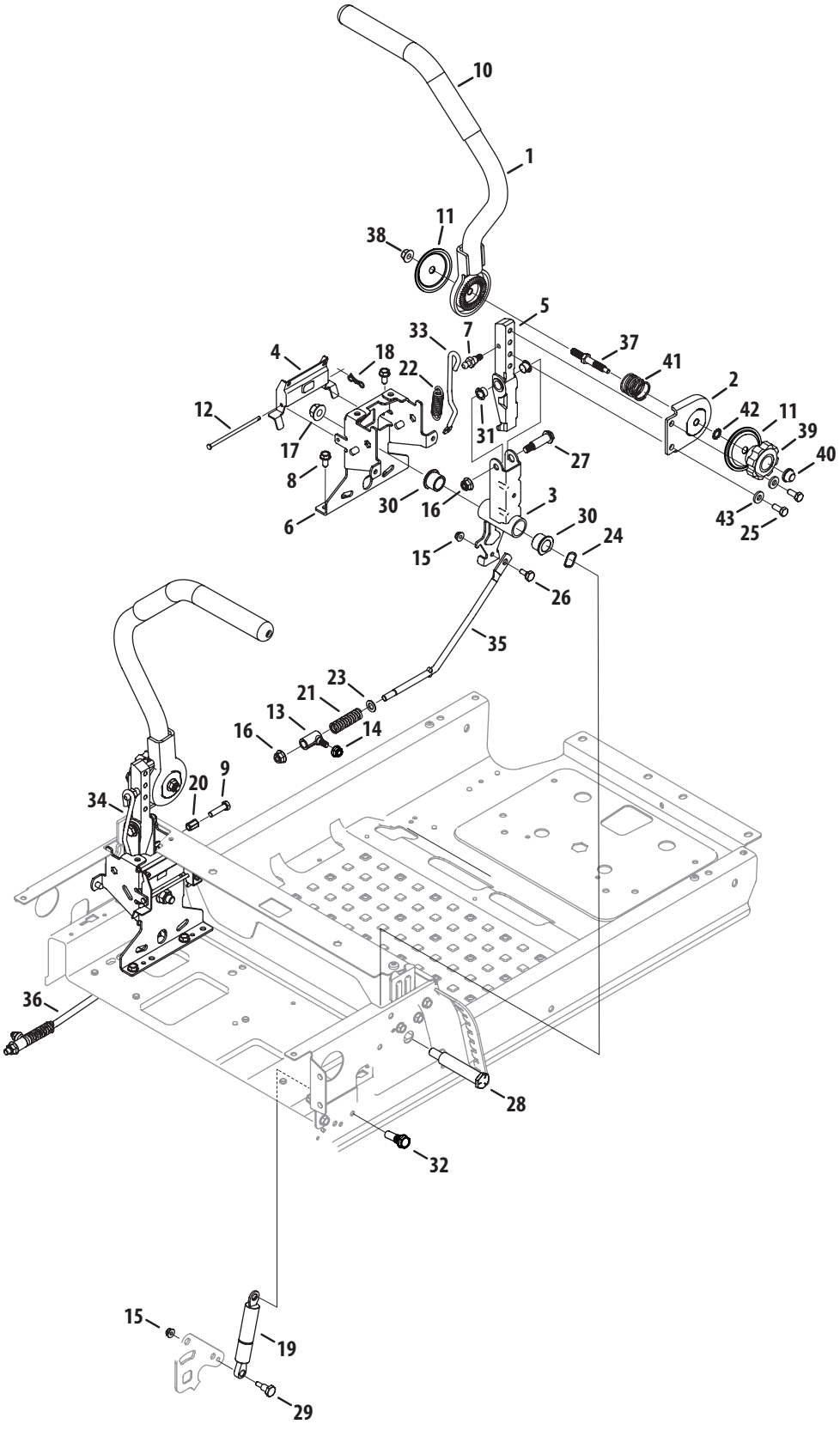
10
1
11
38
5
33
7
37
4
18
22
41
2
12
42
11
17
31
39
40
8
27
30
16
3
43
25
6
30
24
15
26
35
23
21
13
16
14
9
20
34
36
28
32
15
19
29

Ref.	Part Number	Description
1	603-05111	Lapbar Lever Assembly, Otr
2	603-05113	Lapbar lever Assembly, Inr
3	603-05033A	Lapbar Pivot Bracket
4	703-09069	Brake Lever Actuator
5	941-00022	Lower Arm
6	703-09325A	Lapbar Pivot Support Bracket
7	710-04471	Screw, Shoulder Ball, 5/16-18 x .48
8	710-04484	Hex Washer Screw, 5/16-18 x .750
9	710-0528	Hex Cap Screw, 5/16-18 x 1.25
10	720-05008	Lapbar Grip
11	703-09831	Cup Adjustment Bracket
12	711-06068	Pin, .188 x 4.1
13	711-06094A	Ferrule, 3/8 ID x .420 Shldr
14	712-04063	Flange Lock Nut, 5/16-18
15	712-04064	Flange Lock Nut, 1/4-20
16	712-04065	Flange Lock Nut, 3/8-16
17	712-04150	Flange Lock Nut, 1/2-13
18	714-04040	Bow-Tie Cotter Pin
19	727-04400A	Dampener, .87 OD x 7.06 Lg
20	728-05012	Nut, 5/16-18
21	732-05075	Compression Spring, .45 x 3.215
22	732-1162	Extension Spring, .56 x 2.31 x .105

Ref.	Part Number	Description
23	936-0140	Flat Washer, .385 x .62 x .063
24	736-0621	Washer, Wave, .785 x 1.0 x .012
25	710-1880	Hex Head Screw, 5/16-18 x .75 Patch
26	938-0255	Shoulder Screw, .375 Dia. x .181
27	738-05025	Shoulder Screw, .498 Dia. x 1.296
28	738-05033	Shoulder Screw, .75 x 3.25 x 1/2-13
29	738-05034	Shoulder Screw, .395 Dia. x .56
30	741-04050	Bearing, .75 x 1.00 x .73
31	741-0748	Flange Bearing, .500 x .627
32	738-05074	Shoulder Screw, .395 Dia. x .83
33	747-06295	Lapbar Detent Rod, RH
34	747-06294	Lapbar Detent Rod, LH
35	747-06149A	Hydro Control Rod, RH
36	747-06160A	Hydro Control Rod, LH
37	711-06208	Adjustment Stud
38	912-3020	Jam Lock Nut, 3/8-16
39	720-05049	Fluted Knob, 3/8-16
40	726-05029	Push Cap, .250
41	732-04630	Compression Spring, 1.245 x 1.275
42	736-0148	Lock Washer, 3/8
43	936-3008	Flat Washer, .344 x .750 x .120

48" Deck

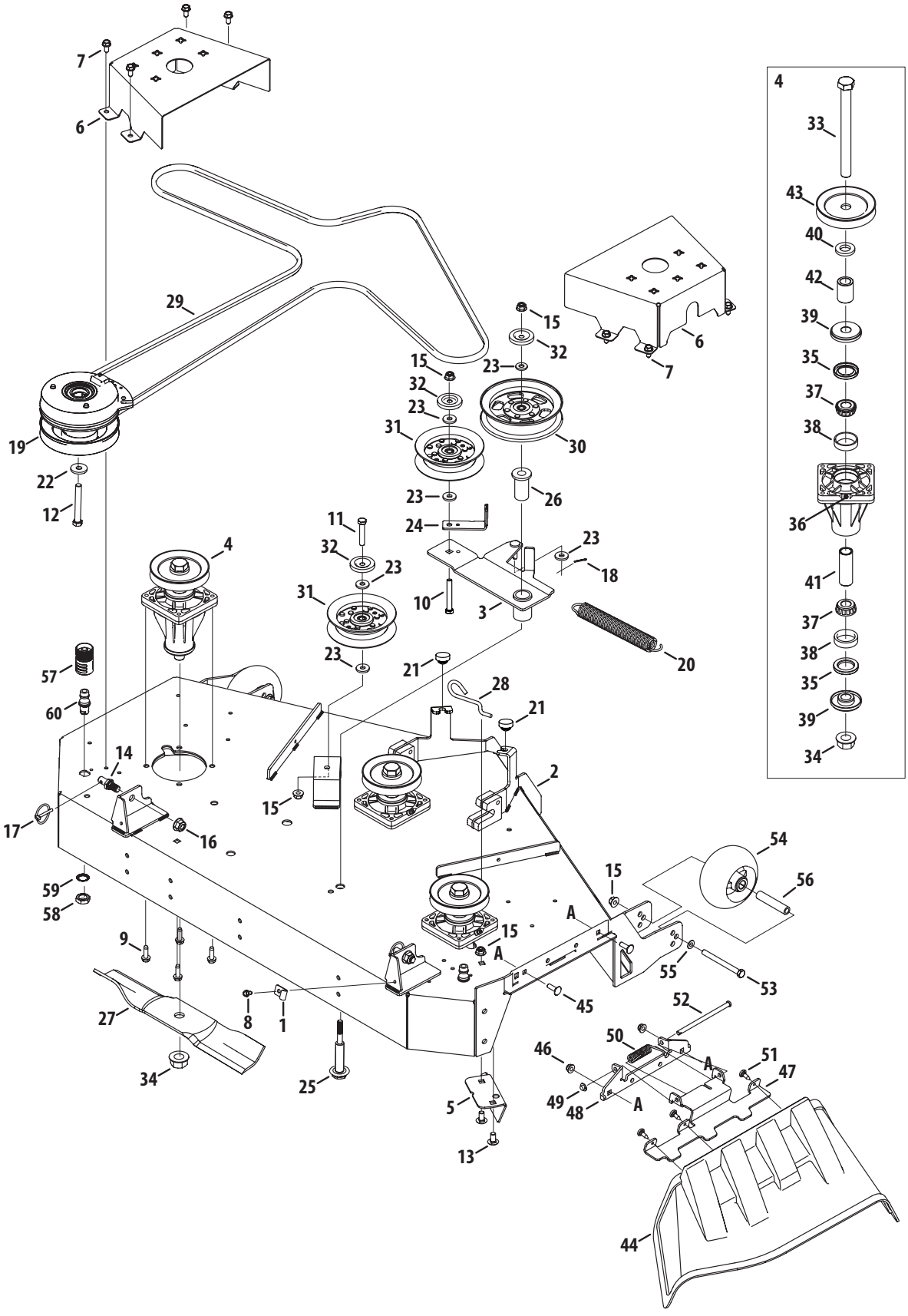

7
6
29
19
22
12
15
32
23
31
30
26
24
11
4
18
10
3
20
57
60
21
28
14
2
17
16
15
54
56
59
58
9
A
55
53
45
27
8
1
52
50
46
51
47
49
48
34
25
5
13
44
33
43
40
42
39
35
37
38
36
41

Ref.	Part Number	Description
1	96606	Bracket, Hook Retainer
2	603-05097	48" Deck Assembly
3	603-05102A	Deck Idler Assembly
4	918-06994	Spindle Assembly
5	703-09435	Chute Baffle
6	703-09492	Belt Cover
7	710-04484	Hex Washer Screw, 5/16-18 x .750
8	710-0599	Hex Washer Screw, 1/4-20 x .500
9	710-0817	Hex Washer Screw, 5/16-18 x 1.250
10	710-0859	Hex Cap Screw, 3/8-16 x 2.50
11	710-3144	Hex Cap Screw, 3/8-16 x 2.00
12	710-3157A	Screw, 7/16-20 x 3.25
13	710-3178	Carriage Screw, 3/8-16 x .75
14	711-06200	Pin, Shoulder Lock, .500
15	712-04065	Flange Lock Nut, 3/8-16
16	712-04150	Flange Lock Nut, 1/2-13
17	753-04070	Pin, Lynch x .1875
18	914-0507	Cotter Pin 3/32" Dia. x .75 Lg.
19	917-05188	Electric PTO Clutch
20	732-04927	Extension Spring, 1.25 OD x 1.751
21	735-05058	Rubber Bumper, 1.00 x .313
22	736-0322	Flat Washer, .450 x 1.25 x .164
23	936-3004	Flat Washer, .406 x .875 x .105
24	783-08027	Belt Guard Bracket
25	738-05049A	Shoulder Boult, .625 x 2.12, 3/8-16
26	741-05056	Shoulder Spacer, 1.055 x .627 x 2.292
27	942-04417	Blade, 17.00
28	747-05608	Deck Spring Rod
29	954-05012	V-Belt
30	756-05053	Idler Pulley, 5.00 Dia.

Ref.	Part Number	Description
31	756-05062	Idler Pulley, 4.00 Dia
32	783-08389	Pulley Cap
33	710-06120	Hex Cap Screw, 3/4-16 x 8.25
34	712-3078	Nut, 3/4-16, Flangelock
35	921-3018A	Oil Seal
36	937-3000	Grease Fitting
37	941-04089	Cone Bearing
38	941-04091	Cup Bearing
39	748-3065A	Spindle Spacer
40	750-05553	Spacer, .812 ID x .218 LG
41	750-06139	Spacer, .78 x 1.00 x 2.895
42	750-06145	Spacer, .792 x 1.20 x 1.628
43	756-3089	V-Type Pulley
44	631-05176	Discharge Chute Assembly
45	710-0276	Carriage Bolt, 5/16-18 x 1.00
46	712-04063	Flange Lock Nut, 5/16-18
47	703-09625	Chute Bracket
48	703-09626	Chute Bracket
49	726-04009	Push Cap
50	732-05128	Torsion Spring
51	738-04549A	Shoulder Screw, 1/4-20
52	747-06318	Chute Rod
53	710-0411	Hex Cap Screw, 3/8-16 x 4.0
54	634-3159	Deck Ball Wheel, 5.0
55	936-0300	Flat Washer, .406 x .875 x .059
56	750-3193	Wheel Spacer
57	921-04041	Water Nozzle Adapter
58	912-0641	Hex Nut, M-16 x 1.5
59	936-0760	Lock Washer, 17 x 23.8 x 1.95
60	737-04003D	Deck Water Nozzle

60" Deck

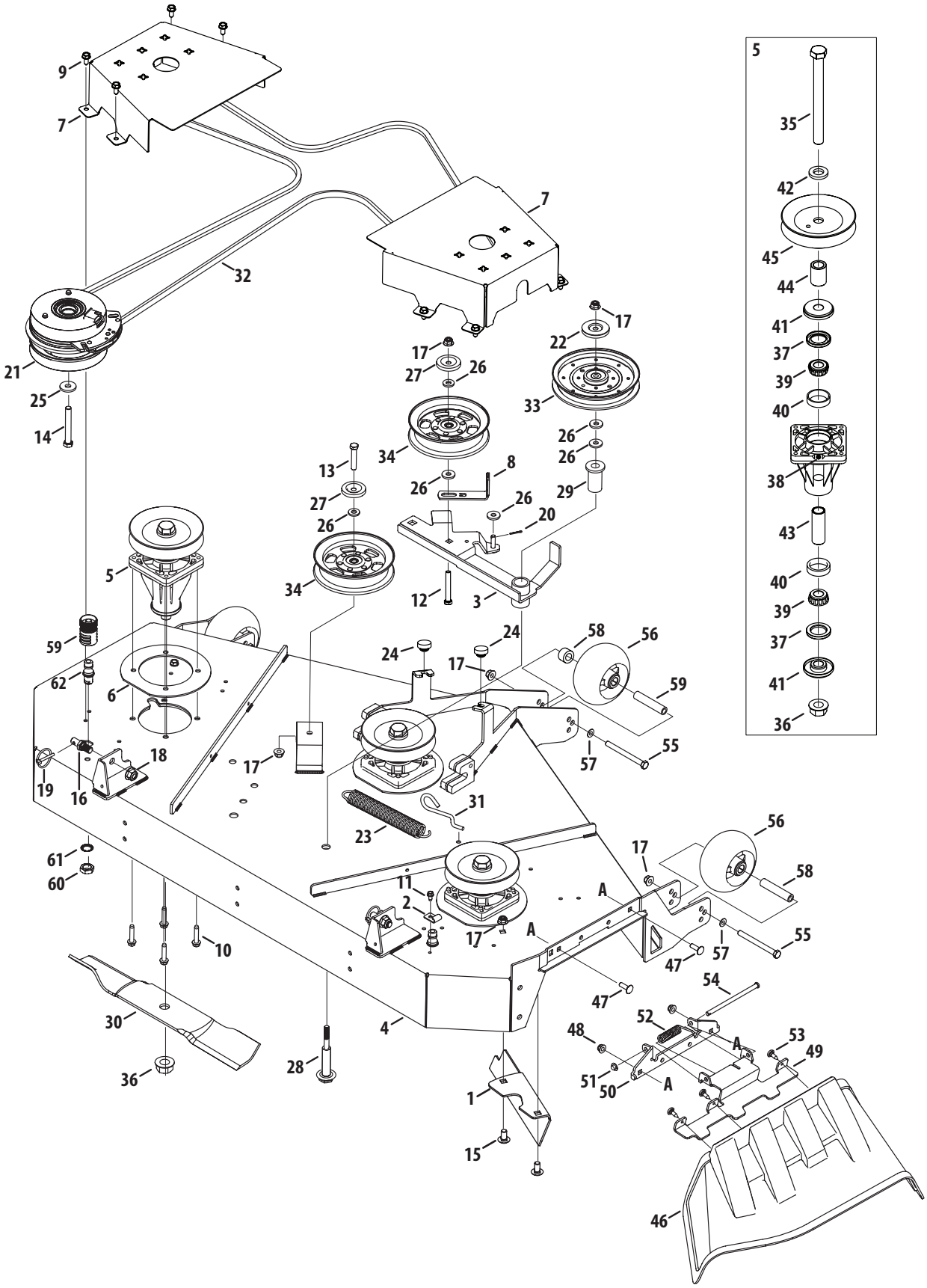

9
7
7
32
21
25
14
17
22
17
27
26
33
34
26
26
13
8
26
29
27
26
26
20
5
34
12
3
59
24
24
58
56
62
6
17
59
18
17
57
55
19
16
31
23
56
61
60
17
58
11
2
A
A
17
55
10
47
57
54
47
30
4
52
48
53
A
49
36
28
51
50
A
1
15
46
5
35
42
45
44
41
37
39
40
38
43
40
39
37
41
36

Ref.	Part Number	Description
1	02005195	Chute Baffle
2	96606	Bracket, Hook Retainer
3	903-05081A	Deck Idler Assembly
4	903-05095	60" Deck Assembly
5	918-06076	Spindle Assembly
6	703-07787	Spindle Reinforcement Plate
7	703-09352	Belt Cover
8	703-09583	Bracket, Deck Keeper
9	710-04484	Hex Washer Screw, 5/16-18 x .750
10	710-04605	Hex Washer Screw, 5/16-18 x 1.50
11	710-0599	Hex Washer Screw, 1/4-20 x .500
12	710-0859	Hex Cap Screw, 3/8-16 x 2.50
13	710-3144	Hex Cap Screw, 3/8-16 x 2.00
14	710-3157A	Screw, 7/16-20 x 3.25
15	710-3178	Carriage Screw, 3/8-16 x .75
16	711-06200	Pin, Shoulder Lock, .500
17	712-04065	Flange Lock Nut, 3/8-16
18	712-04150	Flange Lock Nut, 1/2-13
19	753-04070	Pin, Lynch x .1875
20	914-0507	Cotter Pin 3/32" Dia. x .75 Lg.
21	917-05192	Electric PTO Clutch
22	721-04516	Pulley Cap
23	732-04927	Extension Spring, 1.25 OD x 1.751
24	735-05058	Rubber Bumper, 1.00 x .313
25	736-0322	Flat Washer, .450 x 1.25 x .164
26	936-3004	Flat Washer, .406 x .875 x .105
27	783-08389	Pulley Cap
28	738-05049A	Shoulder Boult, .625 x 2.12, 3/8-16
29	741-05056	Shoulder Spacer, 1.055 x .627 x 2.292
30	942-04415	Blade, 21.00
31	747-05608	Deck Spring Rod

Ref.	Part Number	Description
32	954-05015	V-Belt
33	756-04487	Idler Pulley, 6.00 Dia
34	756-05053	Idler Pulley, 5.00 Dia.
35	710-06120	Hex Cap Screw, 3/4-16 x 8.25
36	712-3078	Nut, 3/4-16, Flangelock
37	921-3018A	Oil Seal
38	937-3000	Grease Fitting
39	941-04089	Cone Bearing
40	941-04091	Cup Bearing
41	748-3065A	Spindle Spacer
42	750-05553	Spacer, .812 ID x .218 LG
43	750-06139	Spacer, .78 x 1.00 x 2.895
44	750-06145	Spacer, .792 x 1.20 x 1.628
45	756-04458A	V-Type Pulley
46	631-05176	Discharge Chute Assembly
47	710-0276	Carriage Bolt, 5/16-18 x 1.00
48	712-04063	Flange Lock Nut, 5/16-18
49	703-09625	Chute Bracket
50	703-09626	Chute Bracket
51	726-04009	Push Cap
52	732-05128	Torsion Spring
53	738-04549A	Shoulder Screw, 1/4-20
54	747-06318	Chute Rod
55	710-0411	Hex Cap Screw, 3/8-16 x 4.0
56	634-3159	Deck Ball Wheel, 5.0
57	936-0300	Flat Washer, .406 x .875 x .059
58	750-3193	Wheel Spacer
59	921-04041	Water Nozzle Adapter
60	912-0641	Hex Nut, M-16 x 1.5
61	936-0760	Lock Washer, 17 x 23.8 x 1.95
62	737-04003D	Deck Water Nozzle

Wiring Harness Schematic - 725-06171

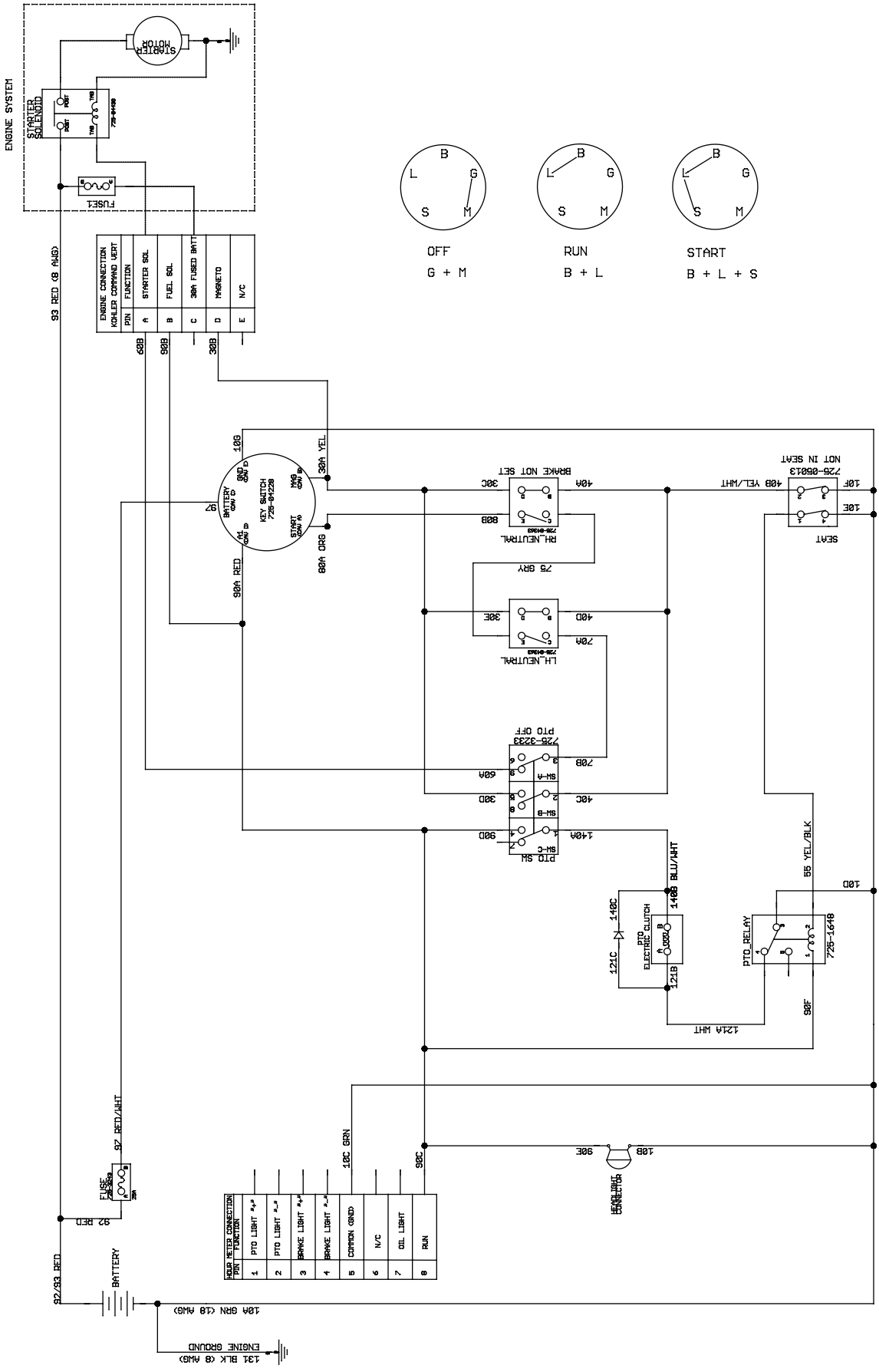

777S35312

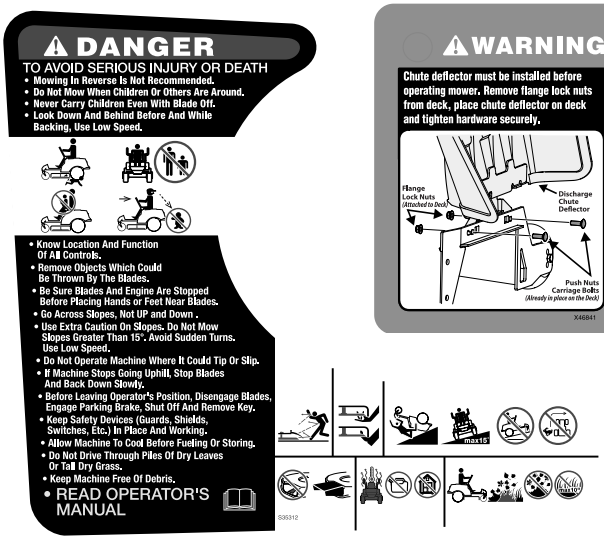

777X46841

777S35298



777I25013

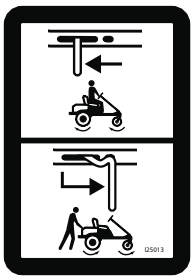

777I25177



777S33568



777I25162



777S35375

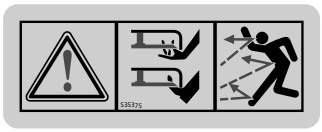

777S35376



777D19181

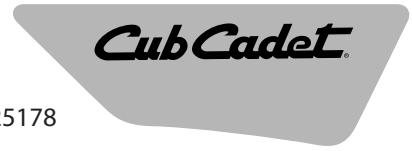

777D19174



777I25178



777I25203



777D19180

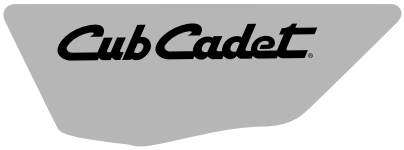

777S35301

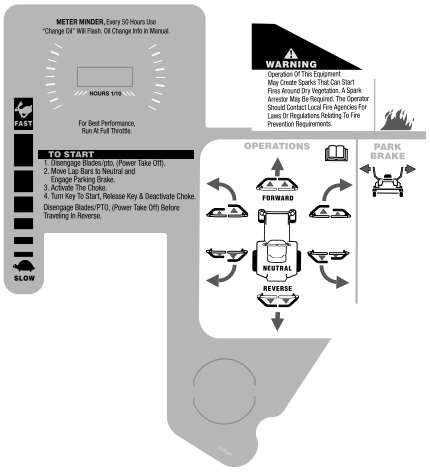

777D19110



777D19177



777D19179



777S33782



LH Transmission 618-06015B

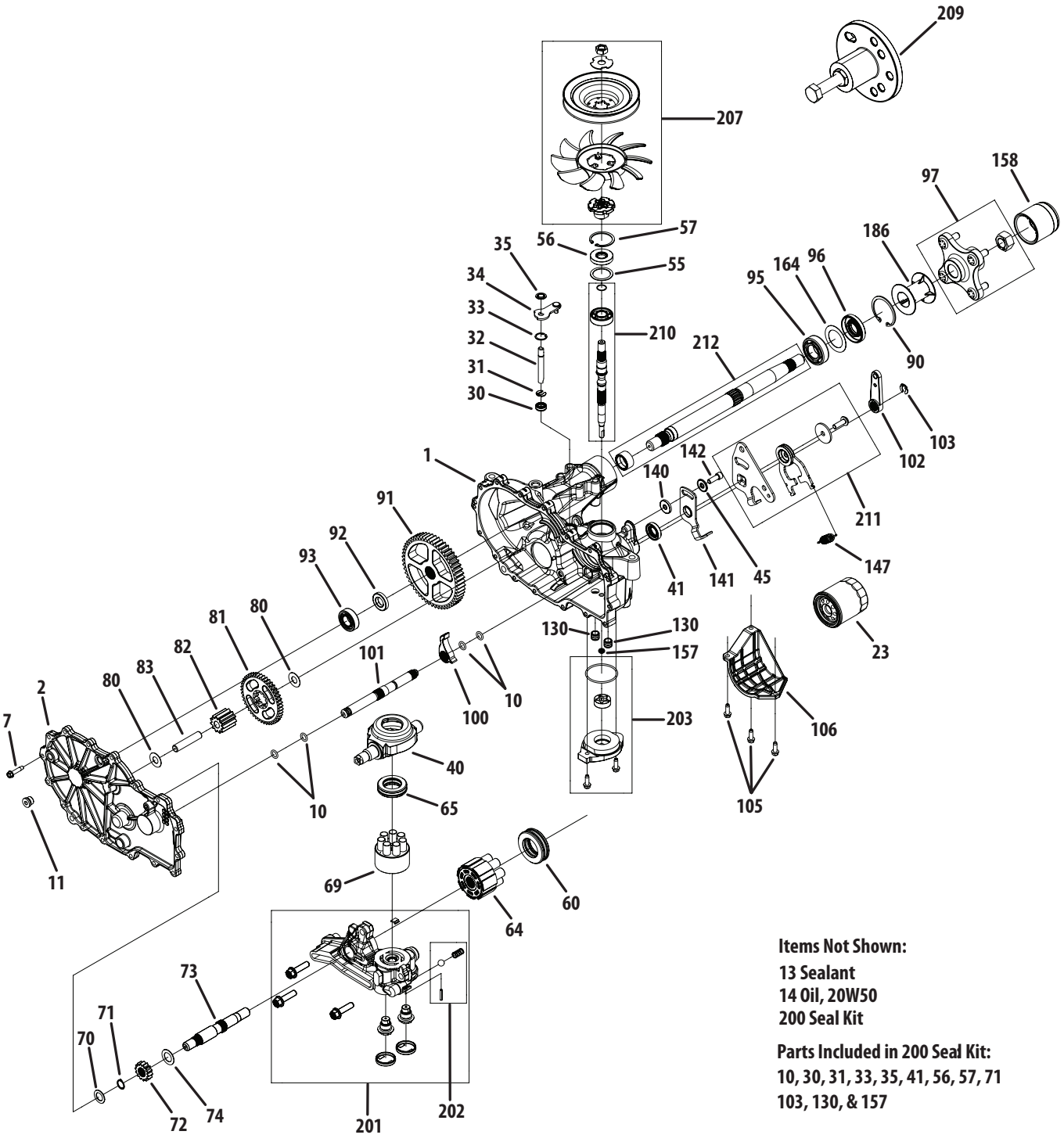

Items Not Shown:

13 Sealant
14 Oil, 20W50
200 Seal Kit

Parts Included in 200 Seal Kit:
10, 30, 31, 33, 35, 41, 56, 57, 71
103, 130, & 157

Ref.	Part Number	Description
1	HG-71421	Kit, Main Housing, LH Charge
2	HG-71574	Kit, Side Cover LH
7	HG-53246	Screw, Hex Washer
10	HG-51804	O-Ring
11	HG-9005110-5600	Plug, 9/16-18
23	HG-52114P	Filter, Spin-On 2.6 x 3.0
30	HG-51626	Seal, Lip, .375 x .75 x .25
31	HG-51628	Ring, Retaining .375 External
32	HG-52136	Rod, Bypass
33	HG-51627	Ring Retaining .750 Internal
34	HG-51910	Arm, Bypass
35	HG-51630	Ring, Ret .375 External
40	HG-51048	Trunnion, Swashplate
41	HG-51140	Seal, Lip 18 x 32 x 7
45	736-0371	Washer, .34 x .88 x .06
55	HG-50951	Washer, 1.23 x 1.57 x .04
56	HG-51161	Seal, Lip 17 x 40 x 7
57	HG-50329	Ring Retaining Internal
60	HG-51462	Bearing, Thrust 35 x 62 x 18
64	HG-71579	Kit, 16cc Cylinder Block Assembly
65	HG-50551P	Thrust Bearing, 30 x 52 x 13
69	HG-70723	Kit, Block, 7 Piston
70	HG-44371	Washer, .63 x 1.00 x .05
71	HG-44145	Ring, Reatining, Motor Shaft
72	HG-52341	Gear, 14T (Steel)
73	HG-52150	Shaft, Motor
74	HG-51069	Washer, .71 x 1.16 x .04
80	HG-50132	Washer
81	HG-52110	Gear, 45T
82	HG-52586	Gear, 11T (Steel)
83	HG-51083	Pin, Jackshaft
90	HG-50859	Ring, Retaining 2.25 Internal
91	HG-52108	Gear, 54T
92	HG-53336	Spacer, .750 x 1.00 x .257

Ref.	Part Number	Description
93	HG-53071	Bearing, Ball 3/4 x 40mm x 12mm
95	HG-53656	Bearing, Ball 25.4 x 52 x 15
96	HG-53699	Seal, Lip, 1.0 x 2.06 x .38
97	HG-71445	Kit, Hub 4-Bolt
100	HG-52766	Pawl, Brake
101	HG-72046	Kit, brake Shaft
102	HG-53973	Handle, Actuating
103	HG-53019	Ring, Retaining, External .438
105	HG-50752	Screw, Hex Washer 1/4-20 x .75
106	HG-53644	Guard, Filter, LH
111	HG-71393	Kit, Fitting 1/2 Beaded 9/16 SAE
130	HG-54501	Tube, Charge Triple O-Ring
140	HG-52527	Spacer, .320 x 1.005 x .150
141	HG-51946	Arm, Return Left
142	HG-71341	SHCS, 5/16-24 x 7/8 (W/Patch)
147	732-04448	Spring, Extension
157	HG-53696	Seal, Gerotor .281 x .420 x .160
158	HG-53501	Cap, Axle
164	HG-53514	Spacer, 1.355 x 2.035 x .021
186	HG-53496	Tube, Axle 2.03
200	HG-71410	Kit. Seal, ZT-2800
201	HG-72567	Kit, Center Section LH Charge
202	HG-71436	Kit, Charge Relief
203	HG-72274	Kit, Charge
207	HG-72135	Kit, Fan Pulley
	HG-53994	Fan Only
	HG-53812	Pulley Hub
	HG-51523	Washer
	HG-44133	Nut
209	HG-72320	Kit, Hub Puller
210	HG-71442	Kit, Input Shaft
211	HG-71592	Kit, RTN Bidirectional
212	HG-71570	Kit, Shaft Axle

RH Transmission 618-06016B

Items Not Shown:
13 Sealant
14 Oil, 20W50
200 Seal Kit

Parts Included in 200 Seal Kit:
10, 30, 31, 33, 35, 41, 56, 57, 71
103, 130, & 157

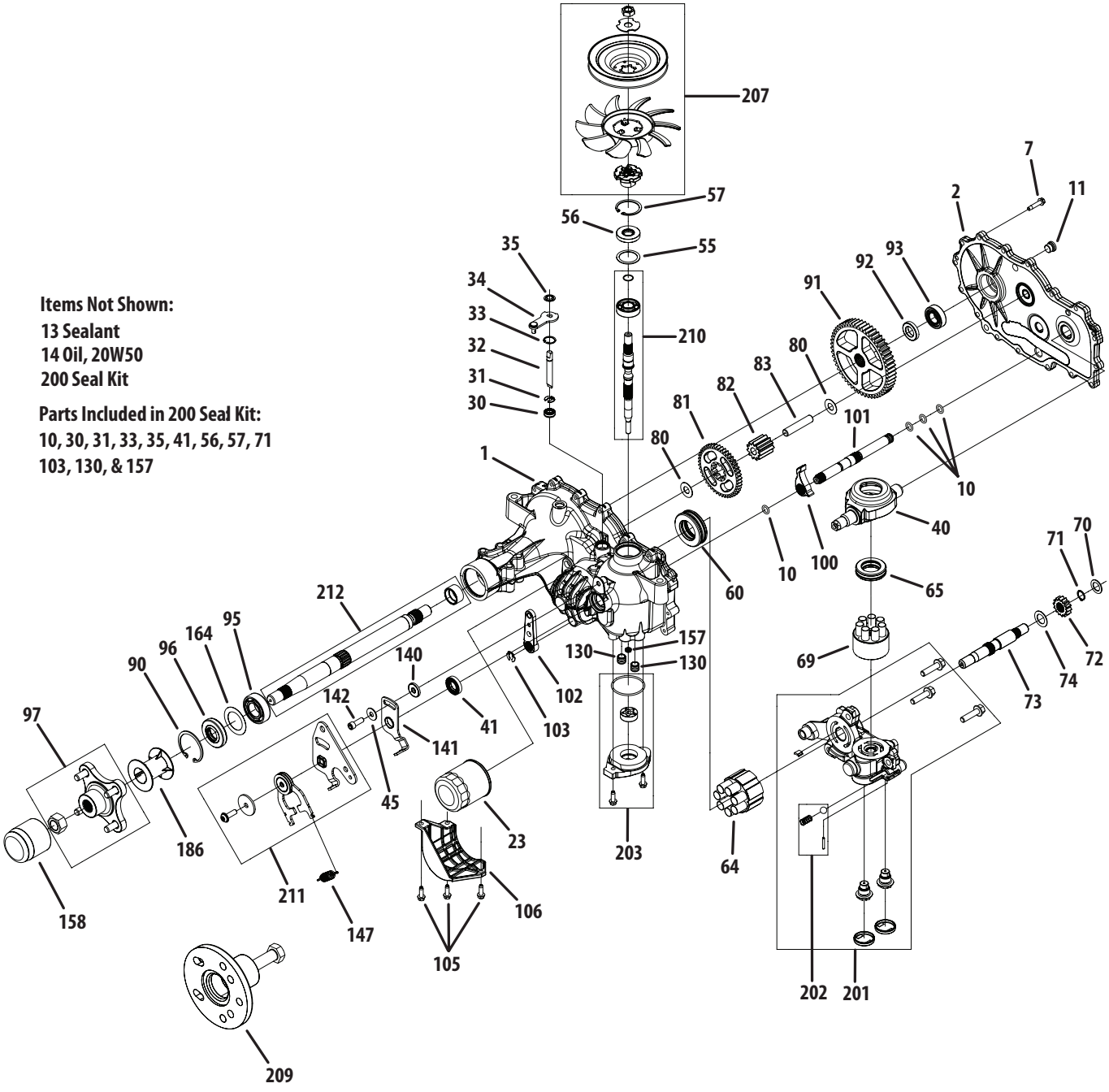

Ref.	Part Number	Description
1	HG-71413	Kit, Main Housing, RH Charge
2	HG-71572	Kit, Side Cover RH
7	HG-53246	Screw, Hex Washer
10	HG-51804	O-Ring
11	HG-9005110-5600	Plug, 9/16-18
23	HG-52114P	Filter, Spin-On 2.6 x 3.0
30	HG-51626	Seal, Lip, .375 x .75 x .25
31	HG-51628	Ring, Retaining .375 External
32	HG-52136	Rod, Bypass
33	HG-51627	Ring Retaining .750 Internal
34	HG-52370	Arm, Bypass
35	HG-51630	Ring, Ret .375 External
40	HG-51048	Trunnion, Swashplate
41	HG-51140	Seal, Lip 18 x 32 x 7
45	736-0371	Washer, .34 x .88 x .06
55	HG-50951	Washer, 1.23 x 1.57 x .04
56	HG-51161	Seal, Lip 17 x 40 x 7
57	HG-50329	Ring Retaining Internal
60	HG-51462	Bearing, Thrust 35 x 62 x 18
64	HG-71579	Kit, 16cc Cylinder Block Assembly
65	HG-50551P	Thrust Bearing, 30 x 52 x 13
69	HG-70723	Kit, Block, 7 Piston
70	HG-44371	Washer, .63 x 1.00 x .05
71	HG-44145	Ring, Reatining, Motor Shaft
72	HG-52341	Gear, 14T (Steel)
73	HG-52150	Shaft, Motor
74	HG-51069	Washer, .71 x 1.16 x .04
80	HG-50132	Washer
81	HG-52110	Gear, 45T
82	HG-52586	Gear, 11T (Steel)
83	HG-51083	Pin, Jackshaft
90	HG-50859	Ring, Retaining 2.25 Internal
91	HG-52108	Gear, 54T
92	HG-53336	Spacer, .750 x 1.00 x .257

Ref.	Part Number	Description
93	HG-53071	Bearing, Ball 3/4 x 40mm x 12mm
95	HG-53656	Bearing, Ball 25.4 x 52 x 15
96	HG-53699	Seal, Lip, 1.0 x 2.06 x .38
97	HG-71445	Kit, Hub 4-Bolt
100	HG-52766	Pawl, Brake
101	HG-72046	Kit, brake Shaft
102	HG-53973	Handle, Actuating
103	HG-53019	Ring, Retaining, External .438
105	HG-50752	Screw, Hex Washer 1/4-20 x .75
106	HG-53655	Guard, Filter, RH
111	HG-71393	Kit, Fitting 1/2 Beaded 9/16 SAE
130	HG-54501	Tube, Charge Triple O-Ring
140	HG-52527	Spacer, .320 x 1.005 x .150
141	HG-51945	Arm, Neutral Right
142	HG-71341	SHCS, 5/16-24 x 7/8 (W/Patch)
147	732-04448	Spring, Extension
157	HG-53696	Seal, Gerotor .281 x .420 x .160
158	HG-53501	Cap, Axle
164	HG-53514	Spacer, 1.355 x 2.035 x .021
186	HG-53496	Tube, Axle 2.03
200	HG-71410	Kit. Seal, ZT-2800
201	HG-72568	Kit, Center Section RH Charge
202	HG-71436	Kit, Charge Relief
203	HG-72274	Kit, Charge
207	HG-72135	Kit, Fan Pulley
	HG-53994	Fan Only
	HG-53812	Pulley Hub
	HG-51523	Washer
	HG-44133	Nut
209	HG-72320	Kit, Hub Puller
210	HG-71442	Kit, Input Shaft
211	HG-71588	Kit, RTN Bidirectional
212	HG-71570	Kit, Shaft Axle

Kohler ZT730-3011 Crankcase

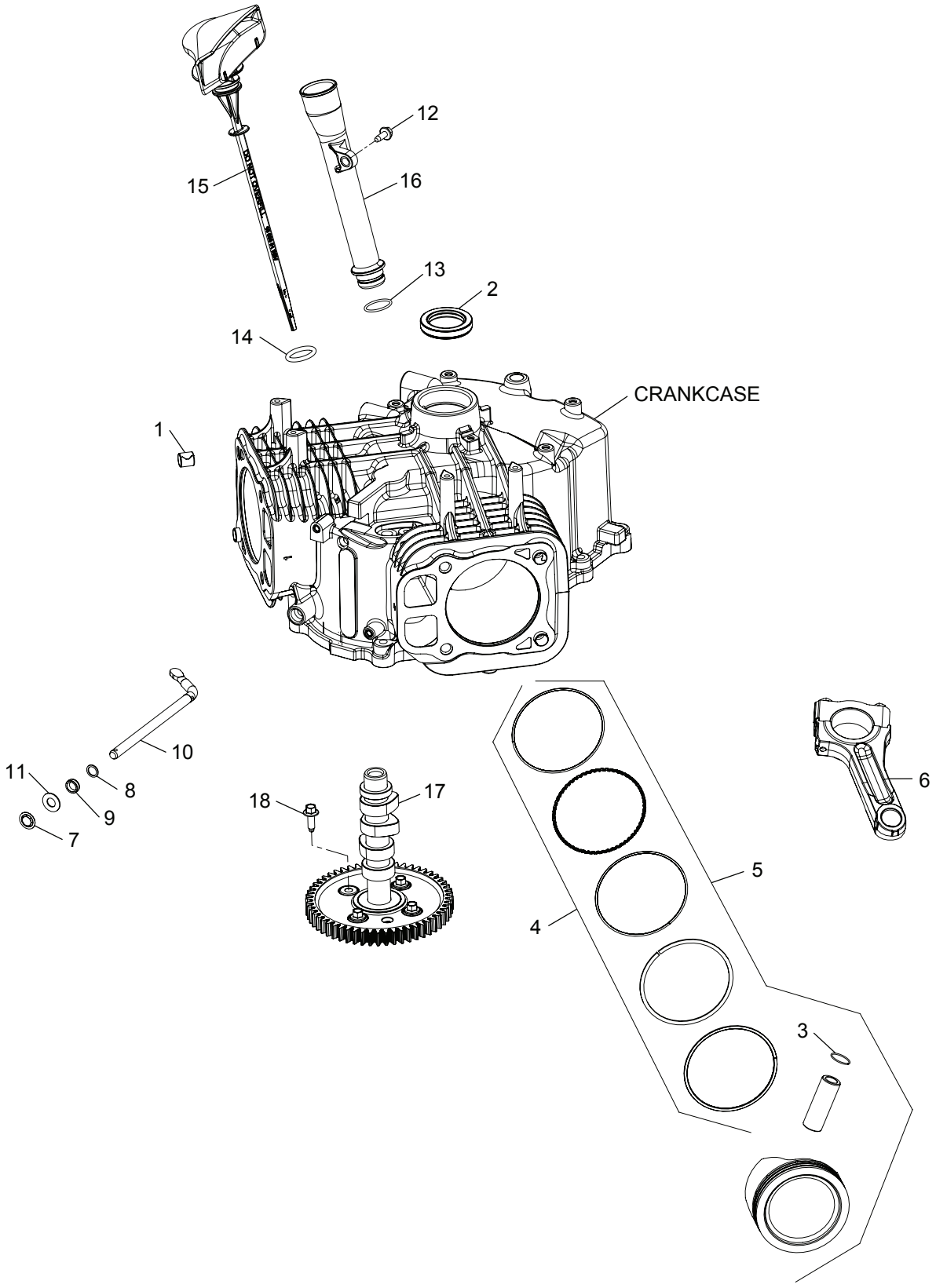

Ref.	Part Number	Description
1	KH-24-380-16-S	Locating Pin
2	KH-24-032-19-S	Oil Seal
3	KH-24-018-01-S	Piston Pin Retainer
4	KH-25-108-01-S	Piston Ring Set (STD)
—	KH-25-108-02-S	Piston Ring Set (.08)
—	KH-25-108-03-S	Piston Ring Set (.25)
—	KH-25-108-04-S	Piston Ring Set (.50)
5	KH-25-874-14-S	Piston Kit w/ Ring (STD) (Inc. 9 & 10)
—	KH-25-874-18-S	Piston Kit w/ Ring (.08)
—	KH-25-874-19-S	Piston Kit w/ Ring (.25)
—	KH-25-874-20-S	Piston Kit w/ Ring (.50)
6	KH-24-067-30-S	Connecting Rod Assembly (STD)
—	KH-24-067-31-S	Connecting Rod Assembly (.010") (25mm)
7	KH-24-018-09-S	Ring Retainer
8	KH-24-468-15-S	Flat Washer, 11/32"
9	KH-28-032-09-S	Governor Cross Shaft Seal
10	KH-24-144-38-S	Governor Cross Shaft
11	KH-M-931010-S	Flat Washer, 9 mm
12	KH-25-086-398-S	Thread Forming Screw
13	KH-12-153-07	O-Ring
14	KH-25-153-09-S	O-Ring
15	KH-16-038-02-S	Dipstick Assembly
16	KH-32-123-14-S	Oil Fill Assembly Tube
17	KH-16-010-01-S	Camshaft Assembly
18	KH-25-086-542-S	Hex Flange Screw

Kohler ZT730-3011 Crankshaft

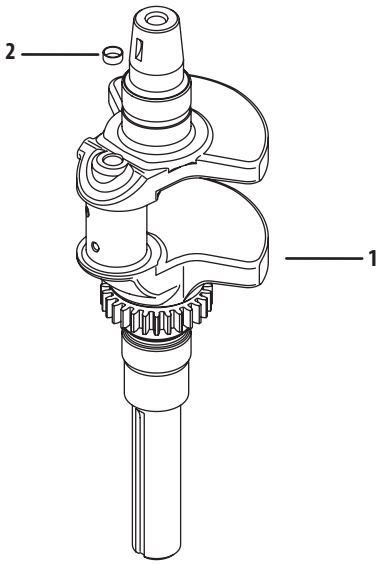

Ref.	Part Number	Description
1	KH-16-014-12-S	Crankshaft
2	KH-52-139-09-S	Cup Plug

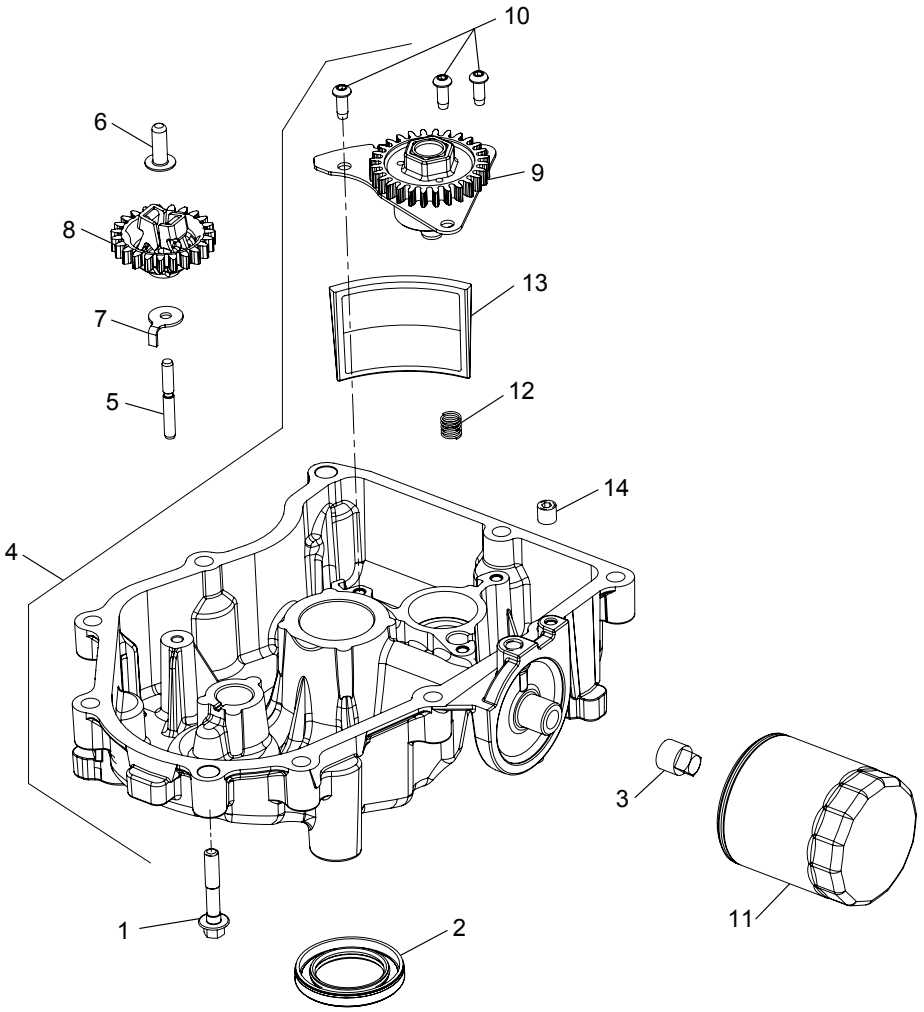

Ref.	Part Number	Description
1	KH-24-086-17-S	Flange Screw, M8 x 1.25 x .45
2	KH-25-032-06-S	Oil Seal
3	KH-25-139-57-S	Pipe Plug, 3/8
4	KH-32-199-17-S	Oil Pan Assembly
5	KH-12-144-02	Governor Gear Shaft
6	KH-12-380-01	Governor Regulating Pin
7	KH-24-448-02-S	Locking Tab
8	KH-32-310-02-S	Governor Gear Kit
9	KH-32-393-18-S	Oil Pump Assembly
10	KH-25-086-414-S	Button Head Screw
11	KH-52-050-02-S	Oil Filter
12	KH-32-089-06-S	Compression Spring
13	KH-32-162-06-S	Oil Screen
14	KH-25-139-60-S	Pipe Plug, 1/8

Kohler ZT730-3011 Head/Valve/Breather

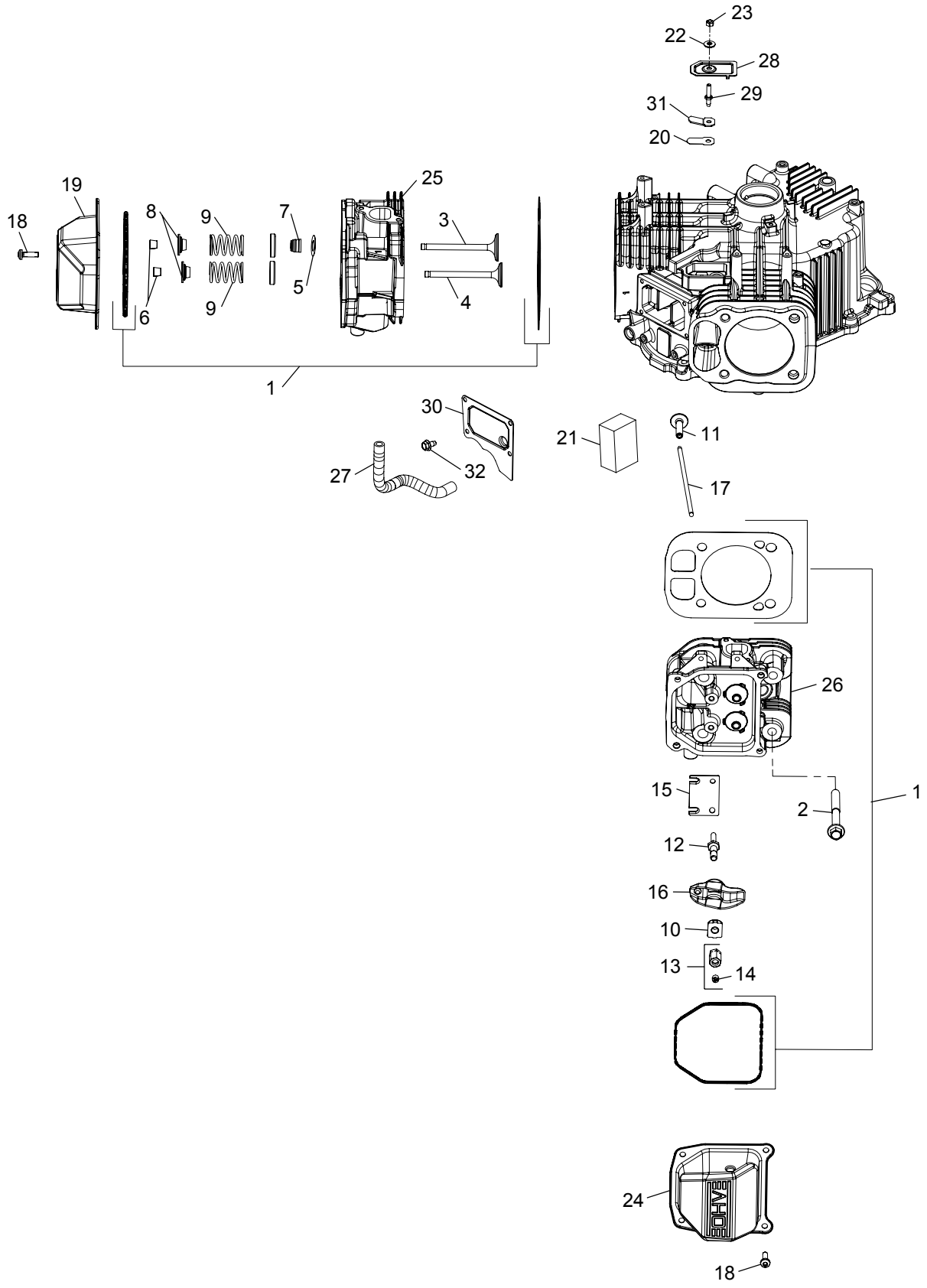

Ref.	Part Number	Description
1	KH-24-841-04-S	Cylinder Head Gasket Kit (Inc. Head Mounting Hardware)
2	KH-62-086-08-S	Flange Screw, M10 x 1.5 x 90
3	KH-32-017-01-S	Intake Valve
4	KH-32-016-01-S	Exhaust Valve
5	KH-275067	Spacer (.010")
6	KH-12-755-03	Retainer Kit
7	KH-25-032-14-S	Valve Band Seal
8	KH-25-173-28-S	Valve Spring Cap
9	KH-32-089-05-S	Valve Spring
10	KH-25-599-01-S	Rocker Arm Pivot
11	KH-32-019-02-S	Tappet
12	KH-32-072-04-S	Rocker Stud
13	KH-32-100-05-S	Hex Nut Assembly (Inc. #14)
14	KH-25-086-168-S	Set Screw
15	KH-32-146-09-S	Guide Plate
16	KH-32-186-03-S	Rocker Arm
17	KH-32-411-04-S	Push Rod
18	KH-25-086-374-S	Pan Head Screw
19	KH-25-096-09-S	Rocker Cover
20	KH-12-402-02	Breather Reed
21	KH-32-050-06-S	Breather Filter
22	KH-32-468-01-S	Sealing Washer
23	KH-M-547050-S	Lock Nut, M5 x 8
24	KH-25-096-11-S	Rocker Cover
25	KH-16-318-01-S	Cylinder Head Assembly Kit, #1 (Inc. Exhaust Mounting Hardware)
26	KH-16-318-02-S	Cylinder Head Assembly Kit, #2 (Inc. Exhaust Mounting Hardware)
27	KH-25-326-62-S	Breather Hose
28	KH-32-096-16-S	Breather Cover
29	KH-32-072-05-S	Stud
30	KH-16-096-02-S	Breather Media Cover
31	KH-66-018-04-S	Reed Retainer
32	KH-25-086-400-S	Thread Forming Screw

Kohler ZT730-3011 Ignition/Electrical

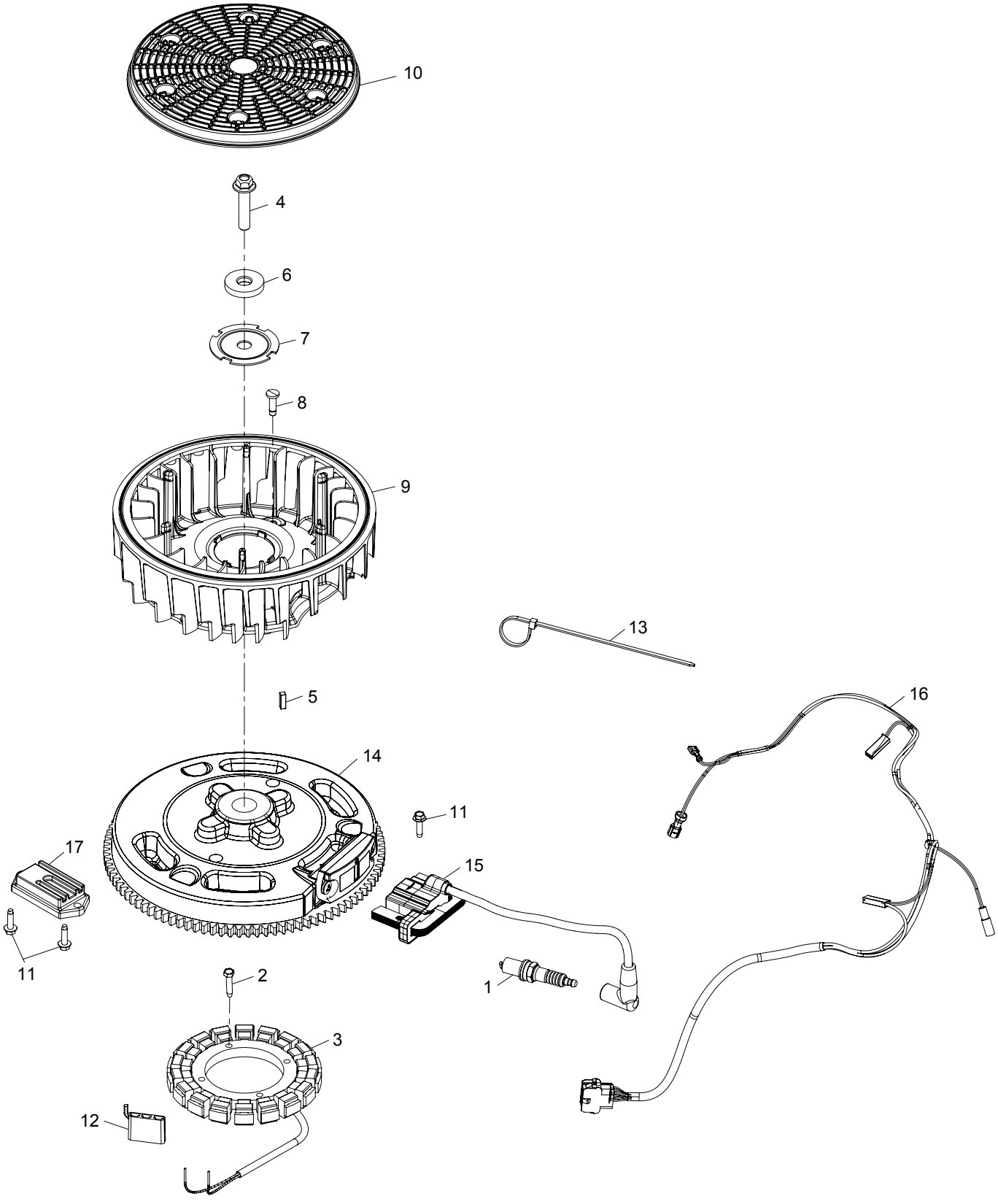

Ref.	Part Number	Description
1	KH-12-132-02-S	Spark Plug
2	KH-25-086-402-S	Thread Forming Screw
3	KH-237878	15 Amp Stator Kit
4	KH-25-086-361-S	Hex Flange Screw
5	KH-25-340-04-S	Square Key
6	KH-25-468-09-S	Flat Washer
7	KH-20-146-05-S	Fan Mounting Plate
8	KH-32-018-03-S	Flywheel Fan Retainer
9	KH-32-157-04-S	Fan
10	KH-32-162-03-S	Grass Screen
11	KH-25-086-473-S	Thread Forming Screw
12	KH-25-155-41-S	Connector
13	KH-25-454-03-S	Wire Tie
14	KH-32-025-25-S	Flywheel Assembly
15	KH-32-584-06-S	Ignition Module
16	KH-32-176-35-S	Wiring Harness
17	KH-41-403-10-S	Rectifier Regulator

Kohler ZT730-3011 Blower Housing & Baffles

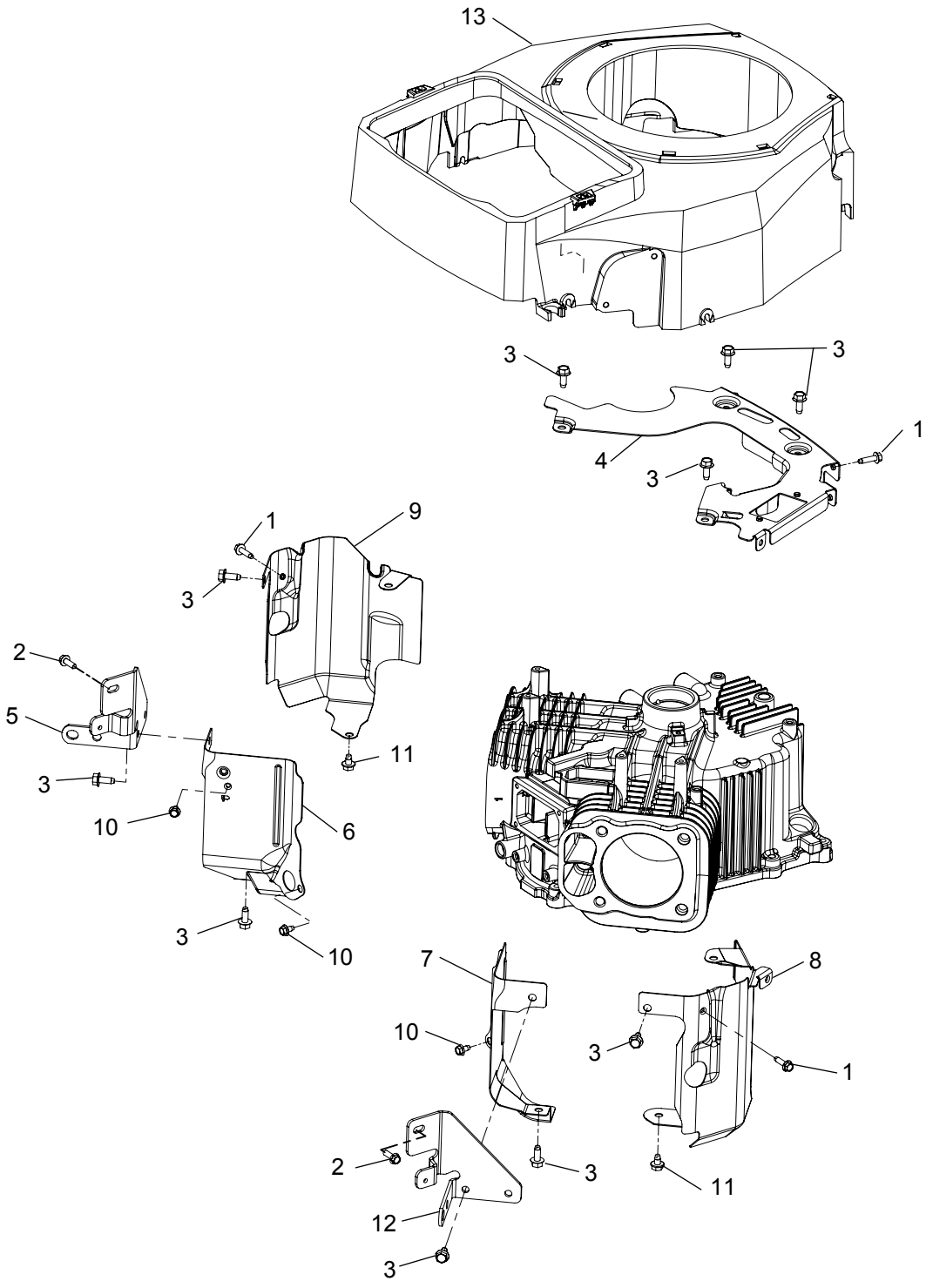

Kohler ZT730-3011 Blower Housing & Baffles

Ref.	Part Number	Description
1	KH-25-086-473-S	Thread Forming Screw
2	KH-25-086-450-S	Hi-Low Screw
3	KH-25-086-397-S	Thread Forming Screw
4	KH-32-146-15-S	Backing Plate
5	KH-16-126-01-S	Air Cleaner Base Bracket (#1)
6	KH-32-063-19-S	Valley Baffle, #1 Cylinder
7	KH-32-063-20-S	Valley Baffle, #2 Cylinder
8	KH-16-063-01-S	Left Barrel Baffle
9	KH-16-063-02-S	Right Barrel Baffle
10	KH-25-086-400-S	Thread Forming Screw
11	KH-25-086-406-S	Thread Forming Screw
12	KH-16-126-02-S	Air Cleaner Base Bracket (#2)
13	KH-16-027-01-S	Blower Housing Kit

Kohler ZT730-3011 Starting System

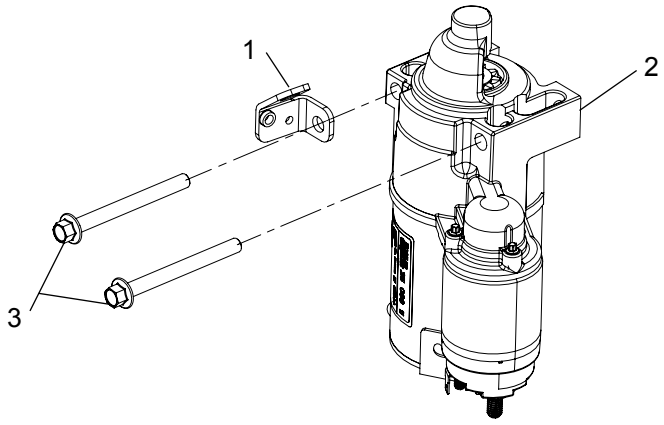

Ref.	Part Number	Description
1	KH-24-126-243-S	Lifting Strap
2	KH-25-098-11-S	Solenoid Shift Starter Assembly
3	KH-M-851080-S	Flange Screw, M8 x 1.25 x 80

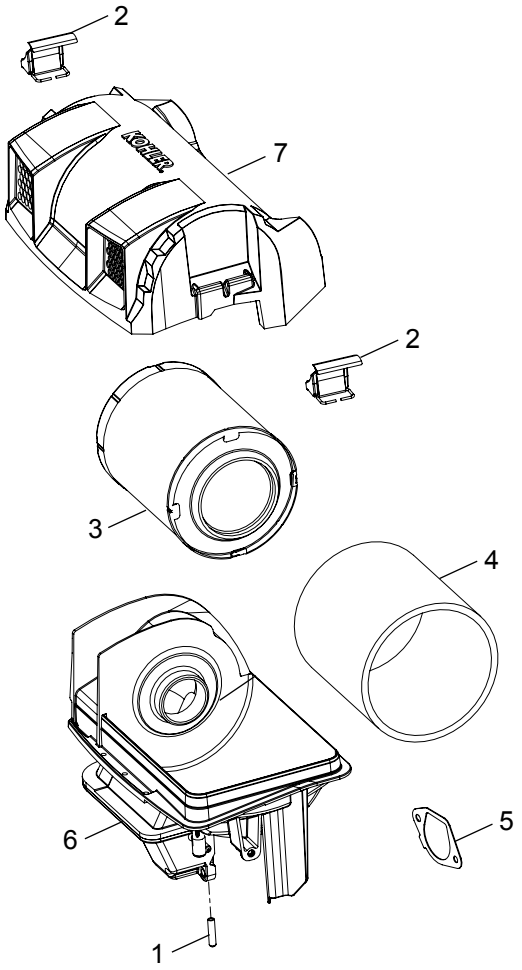

Ref.	Part Number	Description
1	KH-25-173-09-S	Masking Cap
—	KH-25-173-37-S	Masking Cap
2	KH-16-344-01-S	Air Cleaner Cover Latch Assembly
3	KH-16-083-01-S	Air Filter Element
4	KH-16-083-02-S	Pre-Cleaner Element
5	KH-32-041-04-S	Air Cleaner Base Gasket
6	KH-16-094-03-S	Air Cleaner Base Assembly
7	KH-16-096-03-S	Air Cleaner Cover

Kohler ZT730-3011 Engine Controls

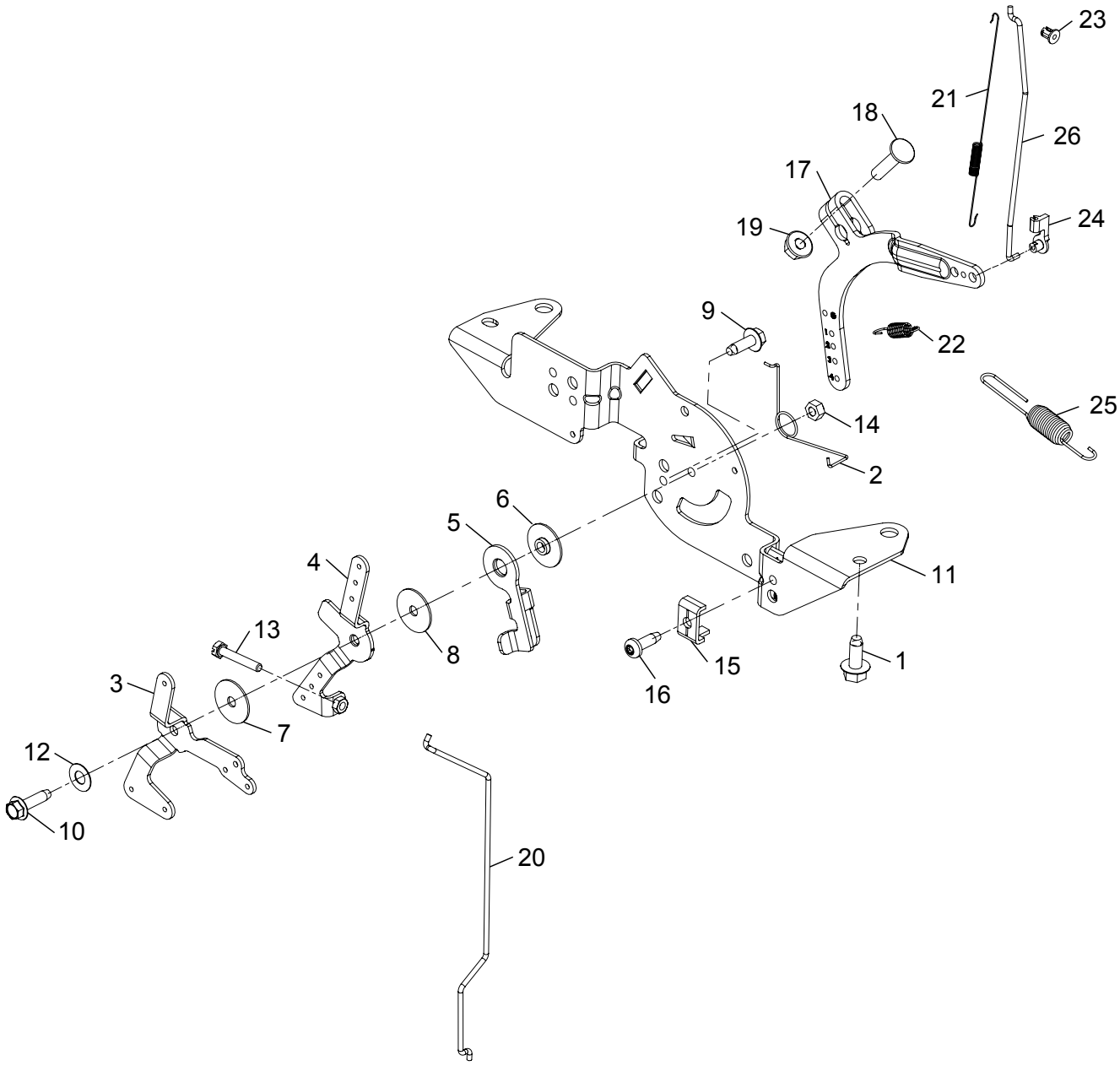

Ref.	Part Number	Description
1	KH-25-086-397-S	Thread Forming Screw
2	KH-24-089-03	Choke Return Spring
3	KH-24-090-05	Choke Lever
4	KH-24-090-13	Throttle Control Lever
5	KH-24-090-47-S	Throttle Actuator Lever
6	KH-24-112-27-S	Control Assembly Spacer
7	KH-24-468-01	Flat Washer, 5.5mm
8	KH-24-468-20-S	Flat Washer, 5mm
9	KH-25-086-398-S	Thread Forming Screw
10	KH-25-086-473-S	Thread Forming Screw
11	KH-32-126-04-S	Control Bracket
12	KH-41-468-03	Spring Washer, 1/4
13	KH-M-403025	Screw, M4 x 0.7 x 25
14	KH-M-547050-S	Lock Nut, M5 x .8
15	KH-12-237-01	Cable Clamp
16	KH-25-086-405-S	Thread Forming Screw
17	KH-24-090-69-S	Governor Lever
18	KH-24-211-03-S	Bolt, M6 x 1.0 x 25
19	KH-M-641060-S	Flange Nut, M6 x 1.0
20	KH-24-079-22-S	Choke Linkage
21	KH-32-089-07-S	Linkage Spring
22	KH-24-089-55-S	Governor Spring
23	KH-25-158-08	Linkage Retaining Bushing
24	KH-25-158-11	Throttle Linkage Bushing
25	KH-24-089-18	Governor Spring
26	KH-32-079-01-S	Throttle Linkage

Kohler ZT730-3011 Fuel System

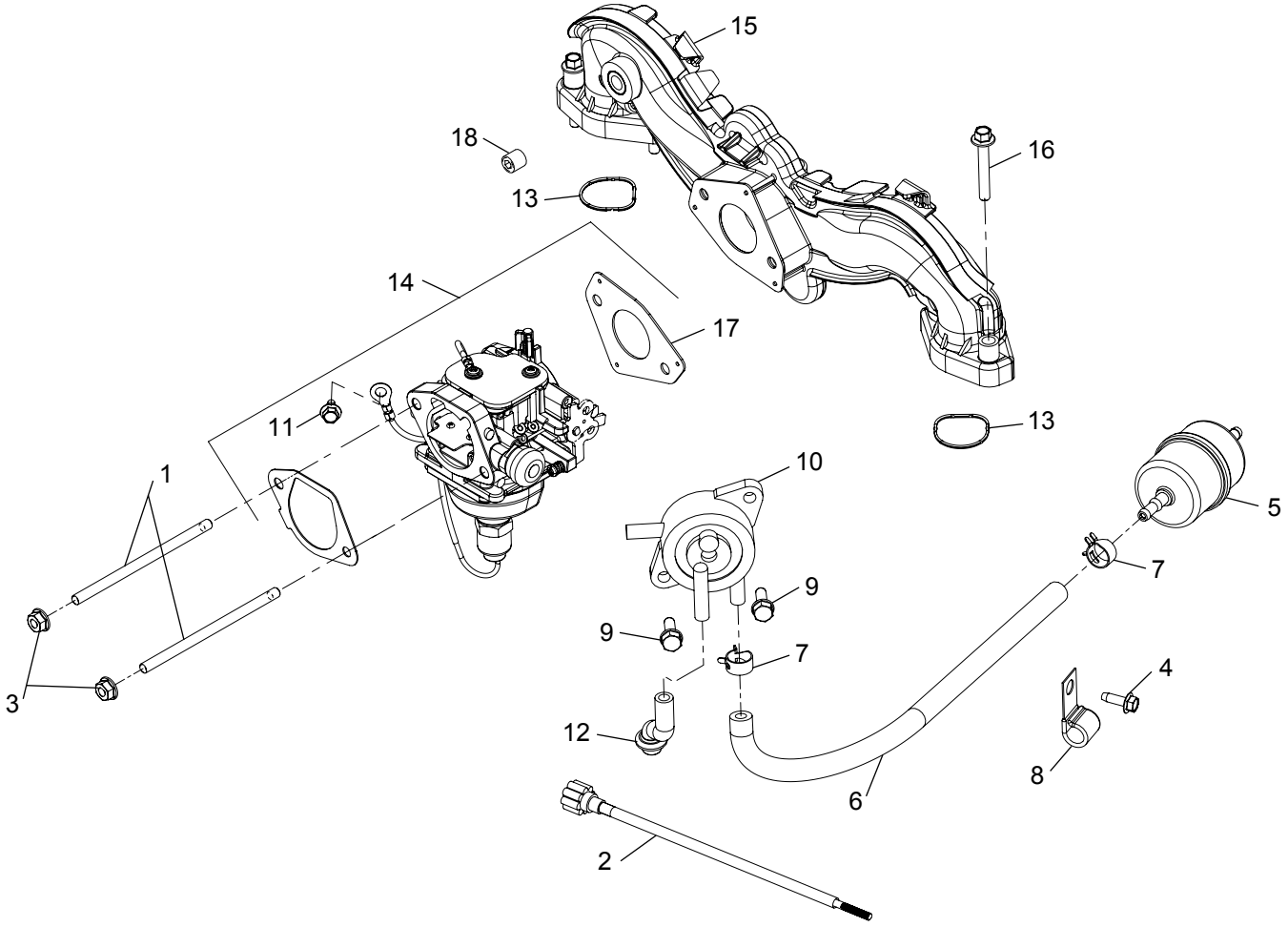

Ref.	Part Number	Description
1	KH-25-072-25-S	Stud
2	KH-66-159-01-S	Carburetor Adjuster Cable
3	KH-M-641060-S	Flange Nut, M6 x 1.0
4	KH-25-086-398-S	Thread Forming Screw
5	KH-24-050-13-S	Fuel Filter
6	KH-25-111-81-S	Fuel Line, 24"
7	KH-25-237-37-S	Spring Hose Clamp
8	KH-47-154-01-S	Cable Clip
9	KH-24-086-12	Tap Screw, M6 x 1.7 x 18
10	KH-24-393-16	Fuel Pump

Ref.	Part Number	Description
11	KH-25-086-400-S	Thread Forming Screw
12	KH-32-326-08-S	Pulse Pump Hose
13	KH-24-153-27-S	Intake Port O-Ring
14	KH-16-853-01-S	Carburator Kit
—	KH-32-853-40-S	Carburator Kit
15	KH-24-164-91-S	Intake Manifold Kit
16	KH-M-651040-S	Flange Screw, M6 x 1.0 x 40
17	KH-24-041-52-S	Carburetor Gasket
18	KH-25-139-60-S	Pipe Plug, 1/8

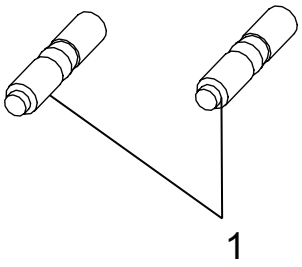

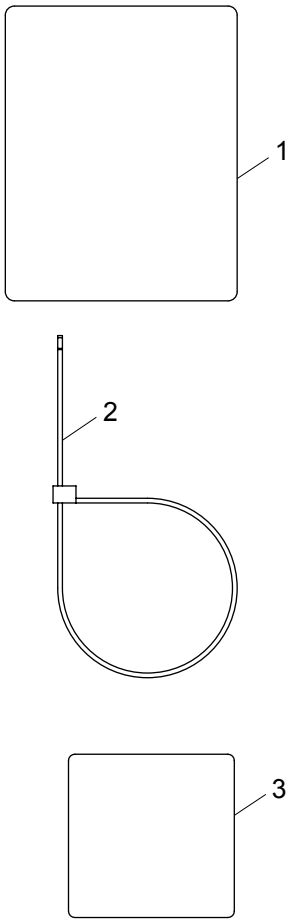

Ref.	Part Number	Description
1	KH-25-072-27-S	Exhaust Stud

Ref.	Part Number	Description
1	KH-25-113-70-S	Clear Laminate Decal
2	KH-25-454-05-S	Tie
3	KH-16-113-07-S	Label, Confidant (23HP, HPAC)

Kohler CV732-3015 Crankcase

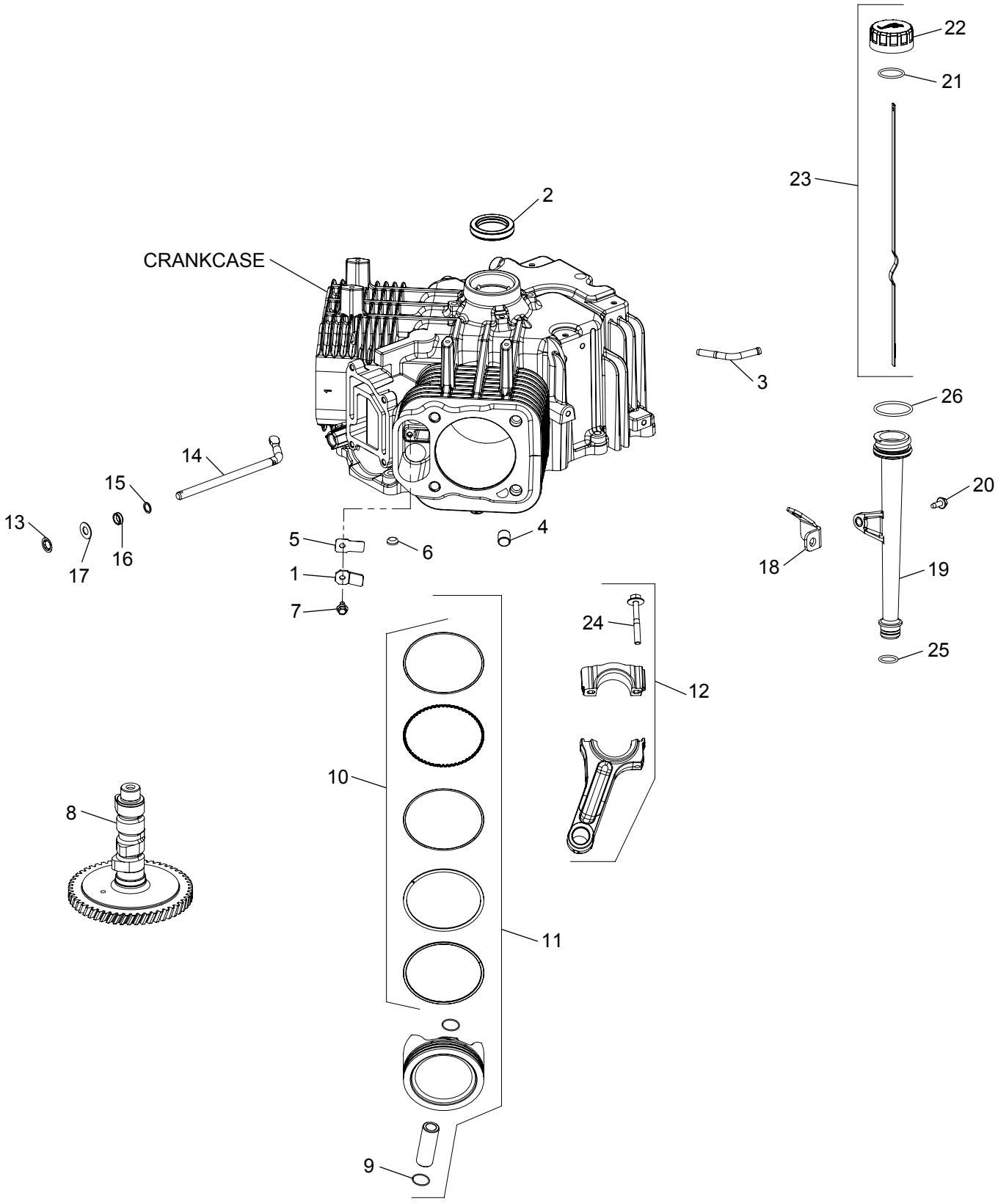

Ref.	Part Number	Description
1	KH-24-018-04-S	Breather Reed Retainer
2	KH-24-032-19-S	Oil Seal
3	KH-24-294-13	Fitting
4	KH-24-380-16-S	Locating Pin
5	KH-24-402-05-S	Breather Reed
6	KH-52-139-09-S	Cup Plug
7	KH-M-0545010	Flange Screw, M5 x 0.8 x 10
8	KH-24-012-29-S	Camshaft Kit
9	KH-24-018-01-S	Piston Pin Retainer
10	KH-25-108-01-S	Piston Ring Set (STD)
—	KH-25-108-02-S	Piston Ring Set (.08)
—	KH-25-108-03-S	Piston Ring Set (.25)
—	KH-25-108-04-S	Piston Ring Set (.50)
11	KH-25-874-14-S	Piston Kit w/ Ring (STD) (Inc. 9 & 10)
—	KH-25-874-18-S	Piston Kit w/ Ring (.08)
—	KH-25-874-19-S	Piston Kit w/ Ring (.25)
—	KH-25-874-20-S	Piston Kit w/ Ring (.50)
12	KH-24-067-34-S	Connecting Rod Kit (Inc. 24)
13	KH-24-018-09-S	Ring Retainer
14	KH-24-144-38-S	Governor Cross Shaft
15	KH-24-468-15-S	Flat Washer, 11/32”
16	KH-28-032-09-S	Governor Cross Shaft Seal
17	KH-M-931010-S	Flat Washer, 9 mm
18	KH-24-126-243-S	Oil Fill Tube Bracket
19	KH-32-755-04-S	Oil Fill Assembly Tube
20	KH-M-545013-S	Flange Screw, M5 x 0.8 x 13
21	KH-25-153-02-S	Dipstick O-Ring
22	KH-24-755-46	Oil Fill Cap Kit (Yellow)
23	KH-24-038-04-S	Dipstick, Assembly (Inc. 21 & 22)
24	KH-25-086-452-S	Connecting Rod Bolts Kit
25	KH-12-153-01-S	Lower Oil Fill Tube O-Ring
26	KH-12-153-02-S	Upper Oil Fill Tube O-Ring

Kohler CV732-3015 Crankshaft

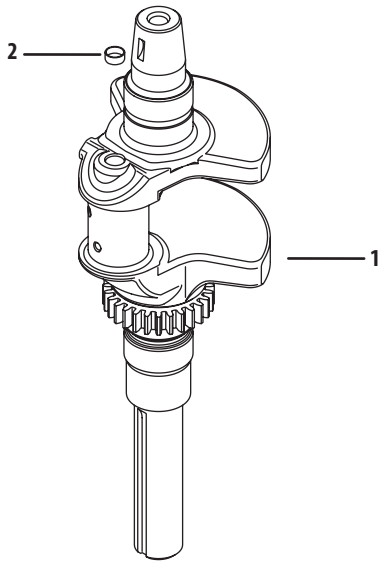

Ref.	Part Number	Description
1	KH-24-014-532-S	Crankshaft
2	KH-52-139-09-S	Cup Plug

Kohler CV732-3015 Oil Pan/Lubrication

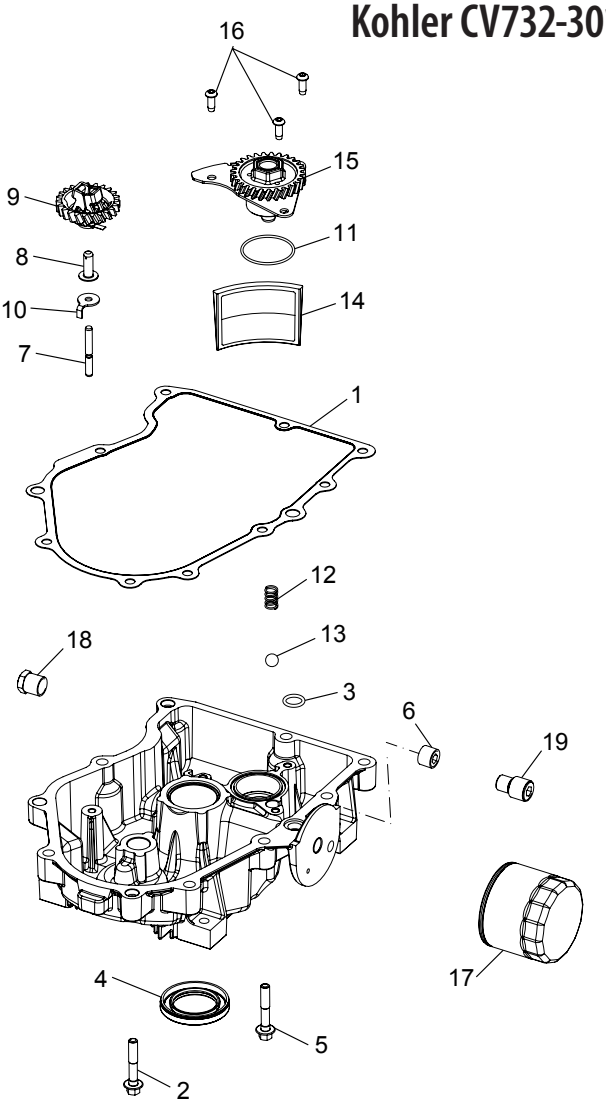

Ref.	Part Number	Description
1	KH-24-041-66-S	Oil Pan Gasket
2	KH-24-086-17-S	Flange Screw, M8 x 1.25 x .45
3	KH-24-153-08	O-Ring
4	KH-25-032-06-S	Oil Seal
5	KH-25-086-17-S	Screw
6	KH-25-139-62-S	Pipe Plug, 3/8
7	KH-12-144-02	Governor Gear Shaft
8	KH-12-380-01	Governor Regulating Pin
9	KH-24-043-12	Governor Gear Kit w/Pin
10	KH-24-448-02-S	Locking Tab

Ref.	Part Number	Description
11	KH-12-153-05	O-Ring (1.78" Dia.)
12	KH-24-089-74-S	Compression Spring
13	KH-25-194-03-S	Pressure Relief Ball
14	KH-32-162-06-S	Oil Screen
15	KH-24-393-71-S	Oil Pump Assembly
16	KH-25-086-414-S	Button Head Screw
17	KH-12-050-01-S	Oil Filter
18	KH-52-139-02	Pipe Plug, 3/8
19	KH-24-136-01	Oil Filter Nipple
N/A	KH-24-199-35-S	Oil Pan Assembly Kit (Not Shown)

Kohler CV732-3015 Head/Valve/Breather

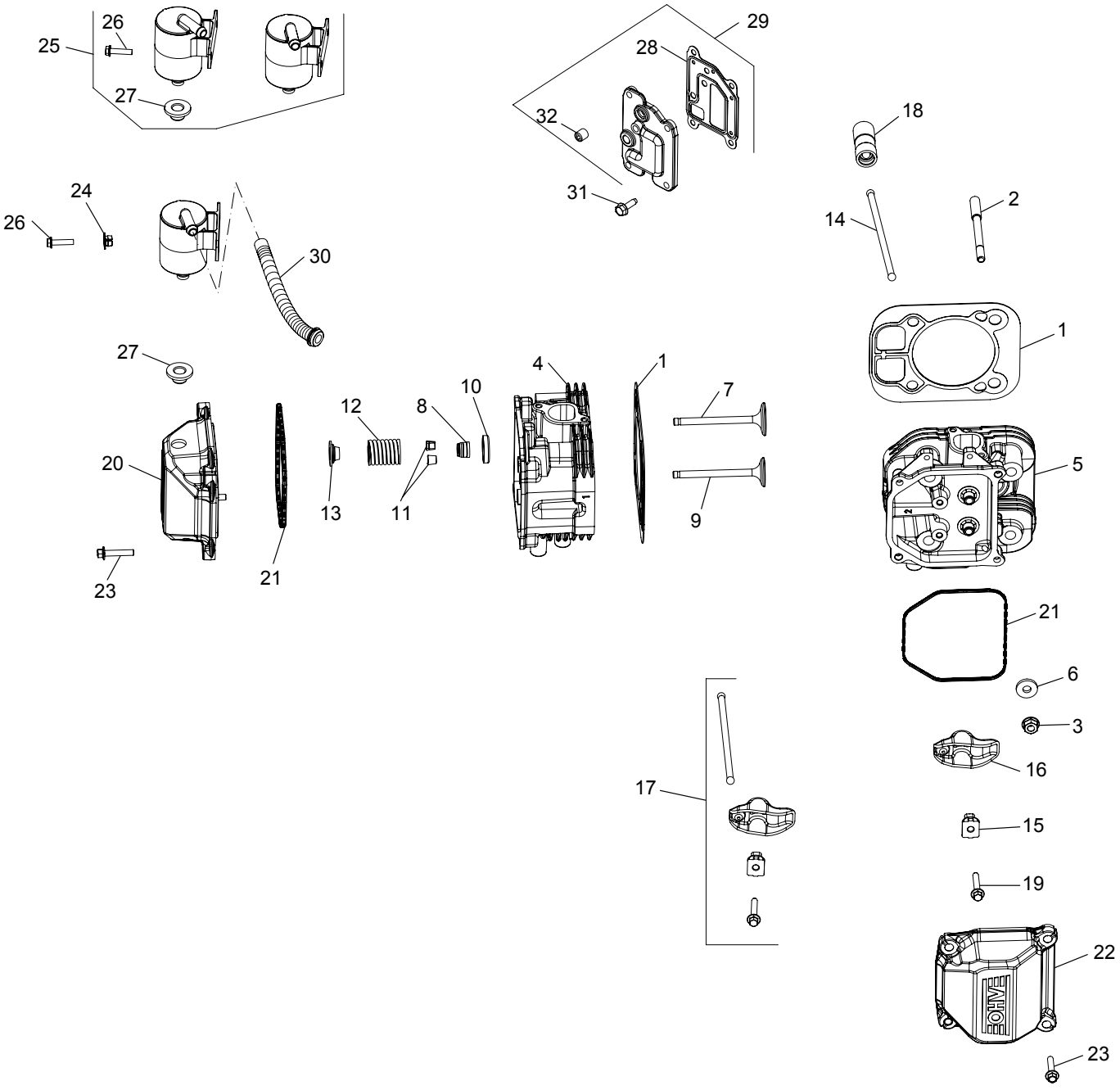

Ref.	Part Number	Description
1	KH-24-841-04-S	Cylinder Head Gasket Kit (Inc. Head Mounting Hardware)
2	KH-24-072-09-S	Stud, M8 x 1.25
3	KH-24-100-10-S	Flange Nut, M8 x 1.25
4	KH-24-318-155-S	#1 Cylinder Head Assembly Kit
5	KH-24-318-156-S	#2 Cylinder Head Assembly Kit
6	KH-24-468-16-S	Flat Washer, 8.6 mm
7	KH-24-017-01	Intake Valve (STD)
—	KH-24-017-02	Intake Valve (.25)
8	KH-25-032-14-S	Valve Band Seal
9	KH-24-016-01	Exhaust Valve (STD)
—	KH-24-016-02	Exhaust Valve (.25)
10	KH-235011-S	Spring Retainer
11	KH-12-755-03	Retainer Kit
12	KH-24-089-02	Valve Spring
13	KH-25-173-28-S	Valve Spring Cap
14	KH-24-411-05	Push Rod
15	KH-24-599-02-S	Rocker Arm Pivot
16	KH-25-186-01	Rocker Arm
17	KH-24-755-66	Valve Train Kit
18	KH-25-351-11-S	Hydraulic Valve Lifter Kit
19	KH-M-640034-S	Flange Screw, M6 x 1.0 x 34
20	KH-24-755-142-S	Valve Cover Kit
21	KH-24-153-30-S	Valve Cover O-Ring
22	KH-24-755-141-S	Plain Rocker Cover Kit
23	KH-M-651030-S	Flange Screw, M6 x 1.0 x 30
24	KH-24-100-02-S	Plastic Nut
25	KH-24-755-241-S	Breather Separator Kit (Inc. 26-27)
26	KH-25-086-157-S	Hi-Lo Hex Flange Screw
27	KH-25-313-05-S	Rubber Grommet
28	KH-24-041-67-S	Breather Gasket
29	KH-24-096-125-S	Breather Cover Kit w/ Gskt. (Inc. 28 & 32)
30	KH-24-326-124-S	Breather Hose
31	KH-25-086-396-S	Flange Screw, M6 x 1.0 x 20
32	KH-25-139-60-S	Pipe Plug, 1/8

Kohler CV732-3015 Ignition/Electrical

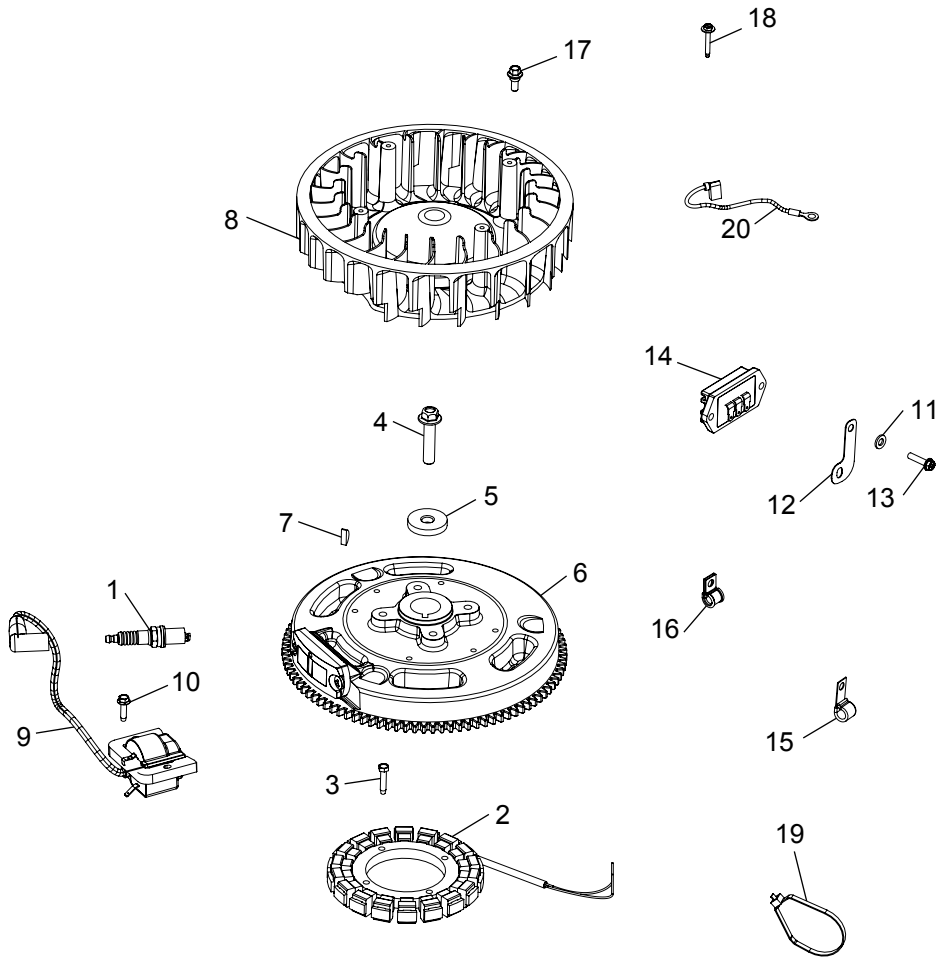

Ref.	Part Number	Description
1	KH-12-132-02-S	Spark Plug
2	KH-237878	15 Amp Stator Kit
3	KH-25-086-402-S	Thread Forming Screw
4	KH-25-086-361-S	Flange Screw, M10 x 1.5 x 45
5	KH-12-468-03	Flat Washer, 13/32"
6	KH-24-025-68-S	Flywheel
7	KH-X-42-15	Key, 3/16 x 5/8
8	KH-24-157-12-S	Fan
9	KH-24-584-45-S	Ignition Module Kit
10	KH-25-086-473-S	Thread Forming Screw
11	KH-X-25-63	Flat Washer, 1/4
12	KH-24-126-137-S	Ground Strap Bracket
13	KH-25-086-157-S	Hi-Lo Hex Flange Screw
14	KH-41-403-10-S	Rectifier Regulator
15	KH-235173	Cable Clip
16	KH-210281-S	Clip
17	KH-25-086-47	Shoulder Bolt
18	KH-25-086-117-S	Flange Screw, M4 x .7 x 25
19	KH-25-454-07-S	Tie
20	KH-25-518-34-S	Lead
N/A	KH-24-162-44-S	Grass Screen (Not Shown)
N/A	KH-54-755-15	Grass Screen Kit (Not Shown)
N/A	KH-24-176-201-S	Wiring Harness Assembly (Not Shown)

Kohler CV732-3015 Blower Housing & Baffles

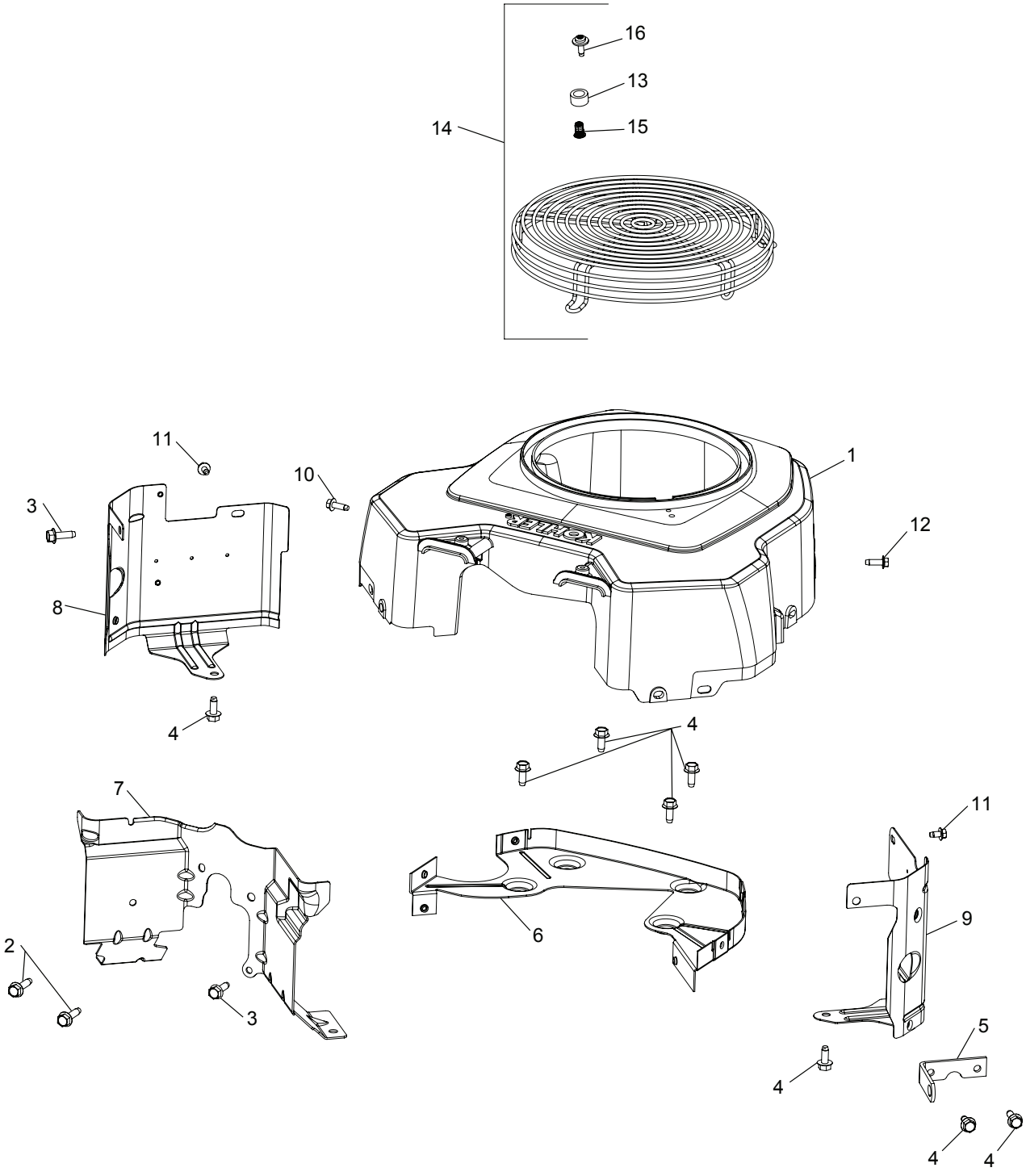

Ref.	Part Number	Description
1	KH-24-027-426-S	Blower Housing
2	KH-25-086-395-S	Thread Forming Screw
3	KH-25-086-396-S	Thread Forming Screw
4	KH-25-086-397-S	Thread Forming Screw
5	KH-25-445-03-S	Lift Strap
6	KH-24-146-59-S	Backing Plate Kit
7	KH-24-063-108-S	Baffle
8	KH-24-063-85-S	Cylinder Barrel Kit, #1 Side
9	KH-24-063-88-S	Cylinder Baffle Kit, #2 Side
10	KH-25-086-398-S	Thread Forming Screw
11	KH-25-086-400-S	Thread Forming Screw
12	KH-25-086-426-S	Thread Forming Screw
15	KH-24-332-01-S	Threaded Insert
16	KH-25-086-160-S	Sems Screw
N/A	KH-24-755-81-S	Fixed Guard Kit (Not Shown)

Kohler CV732-3015 Starting System

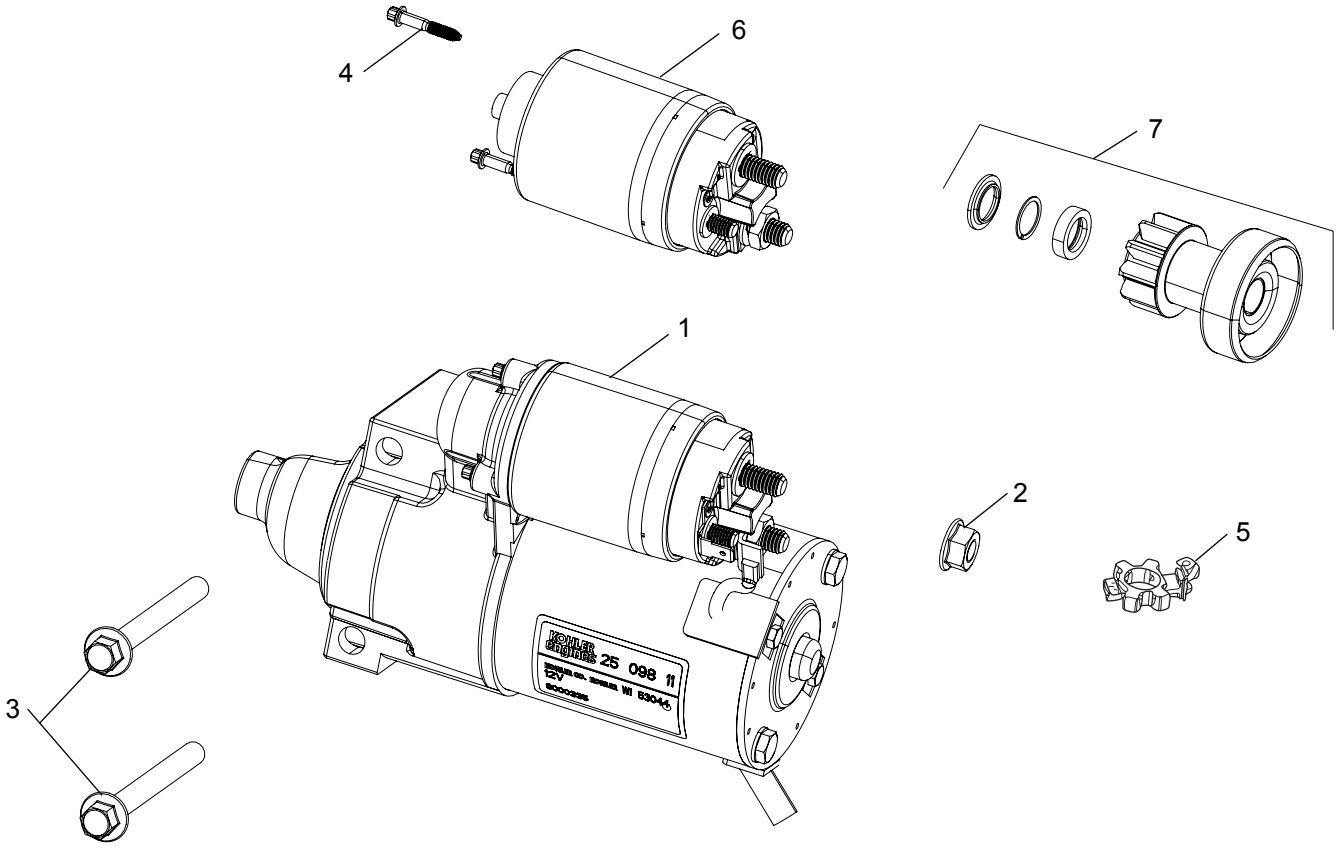

Ref.	Part Number	Description
1	KH-25-098-11-S	Solenoid Shift Starter Assembly
2	712-3086	Flange Nut, M8x1.25
3	KH-M-851080-S	Flange Screw, M8 x 1.25 x 80
4	KH-25-086-113-S	Torx Head Screw
5	KH-25-221-01-S	Brush Holder Kit
6	KH-25-435-06-S	Solenoid Kit (Inc. 4)
7	KH-25-755-33-S	Starter Pinion Kit

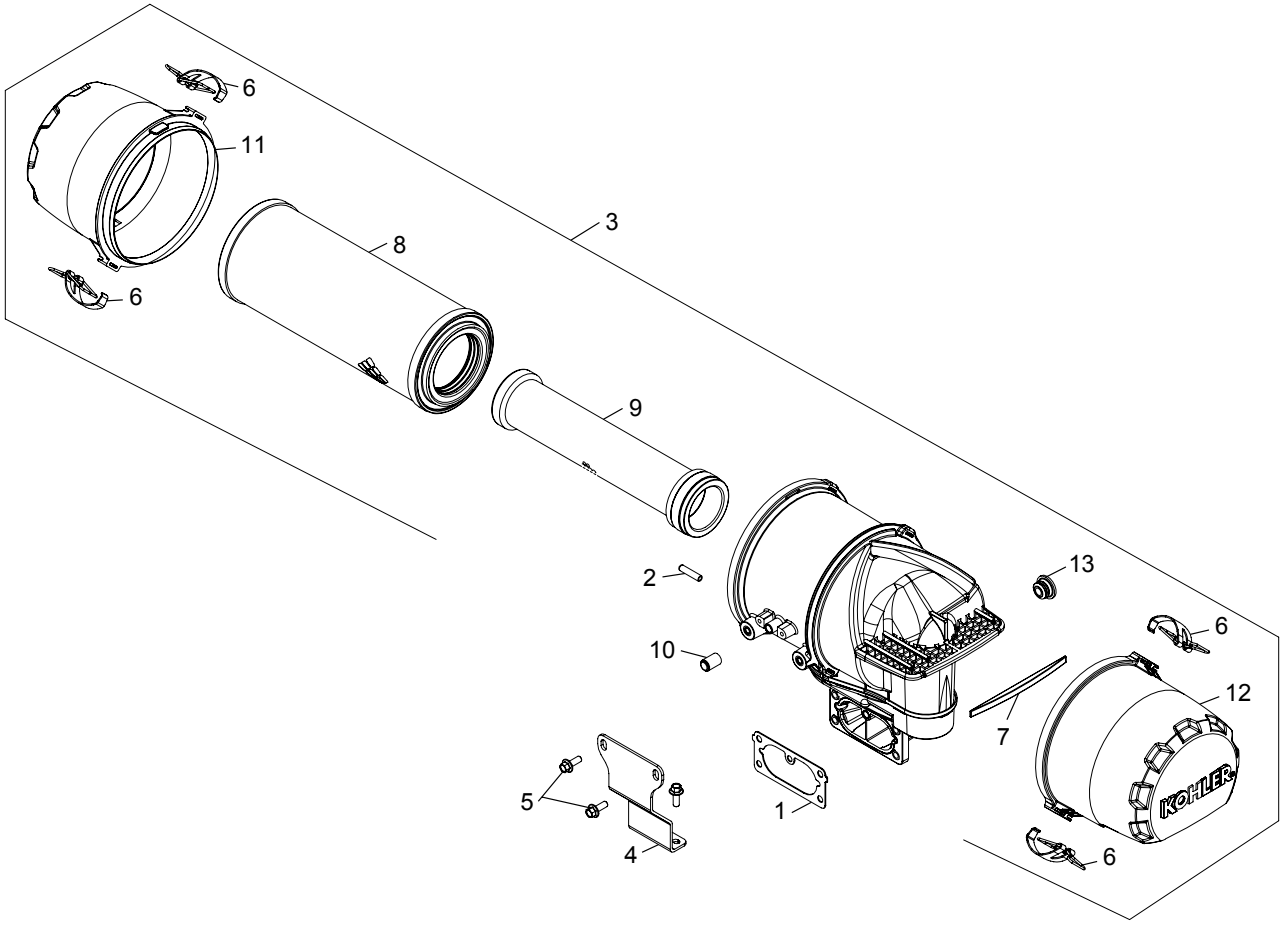

Ref.	Part Number	Description
1	KH-24-041-70-S	Air Cleaner Gasket
2	KH-25-173-34-S	Masking Cap
3	KH-24-048-51-S	Air Cleaner Kit
4	KH-24-126-218-S	Support Bracket
5	KH-M-639016-S	Flange Screw, M6 x 1.0 x 16
6	KH-62-154-07-S	Assembly Clip
7	KH-62-263-03-S	Foam Insert Damper
8	KH-25-083-01-S	Element, Air Filter - PRIMARY
9	KH-25-083-04-S	Element, Air Filter - SAFETY
10	KH-25-173-37-S	Masking Cap
11	KH-62-096-22-S	Air Filter Cover
12	KH-62-096-25-S	Rain Cap Cover
13	KH-62-139-02-S	Hole Plug

Kohler CV732-3015 Engine Controls

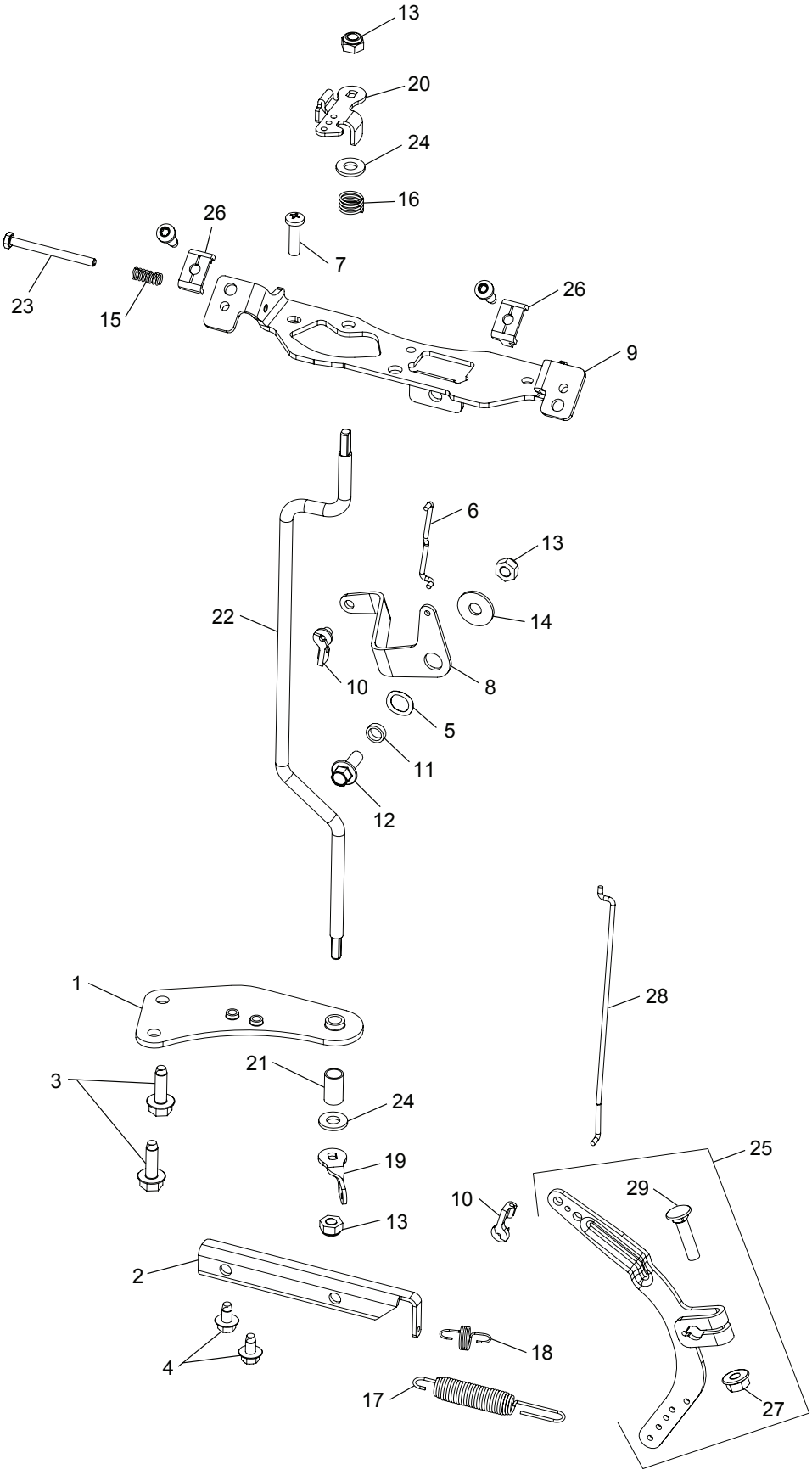

Ref.	Part Number	Description
1	KH-24-126-162-S	Throttle Shaft Bracket
2	KH-24-126-163-S	Governed Idle Bracket
3	KH-25-086-396-S	Thread Forming Screw
4	KH-25-086-400-S	Thread Forming Screw
5	KH-277341	Spring Washer, 3/8
6	KH-24-079-53-S	Choke Linkage
7	KH-24-086-06	Screw, 11-16 x 3/4
8	KH-24-090-50-S	Choke Lever
9	KH-24-126-231-S	Control Bracket
10	KH-25-158-11	Throttle Linkage Bushing
11	KH-25-431-01-S	Spacer
12	KH-M-639016-S	Flange Screw, M6 x 1.0 x 16
13	N/A	Lock Nut, M6 x 1.0
14	736-0173	Flat Washer, 1/4
15	KH-25-086-297-S	Speed Control Spring
16	KH-24-089-20	Throttle Shaft Spring
17	KH-24-089-50-S	Governor Spring
18	KH-24-089-68-S	Governed Idle Spring
19	KH-24-090-12	Throttle Control Lever
20	KH-24-090-71-S	Throttle Control Lever
21	KH-24-112-10	Spacer
22	KH-24-144-37-S	Control Shaft
23	KH-25-086-428-S	Hex Head Screw
24	KH-X-25-72	Flat Washer, 1/4
25	KH-24-090-69-S	Governor Lever
26	KH-25-237-41-S	Cable Clamp
27	KH-M-641060-S	Flange Nut, M6 x 1.0
28	KH-24-079-42-S	Throttle Linkage
29	KH-24-211-03-S	Bolt, M6 x 1.0 x 25
N/A	KH-25-086-398-S	Thread Forming Screw

Kohler CV732-3015 Fuel System

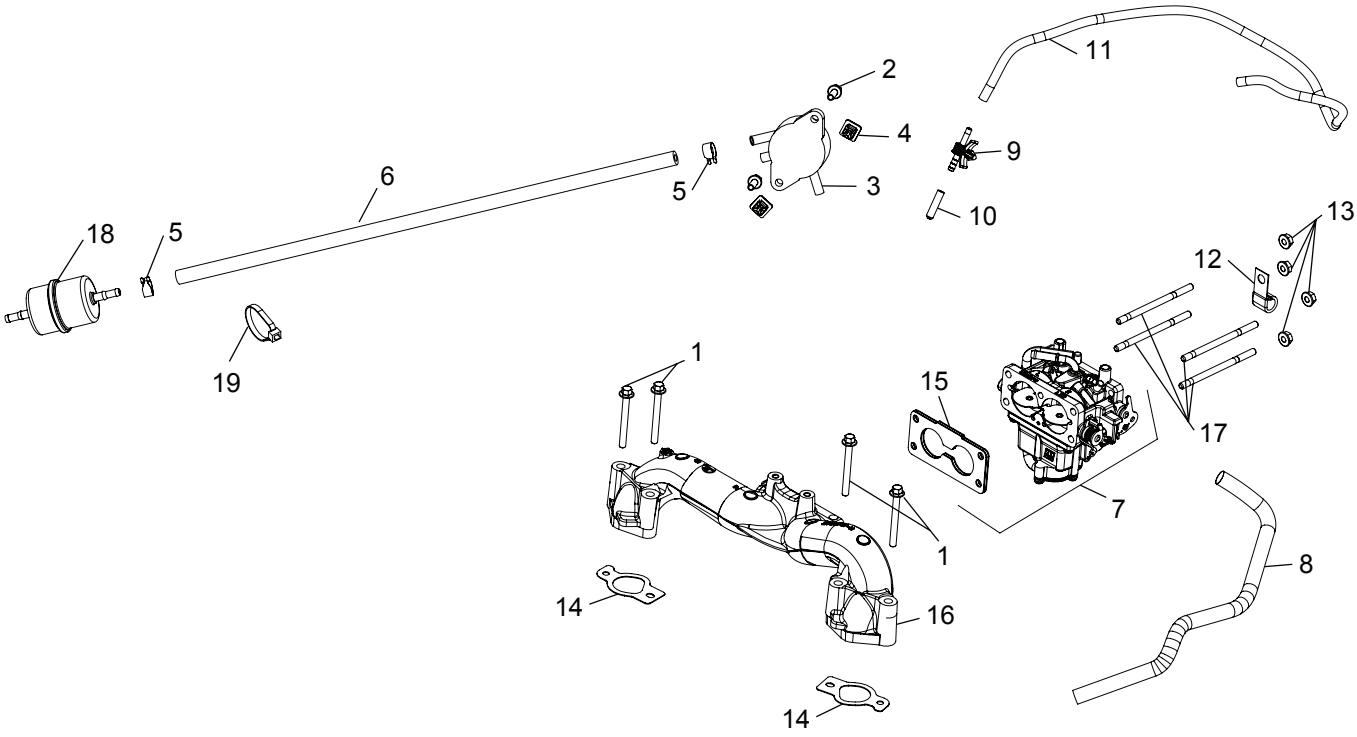

Ref.	Part Number	Description
1	KH-25-086-84-S	Flange Screw, M6 x 1.0 x 55
2	KH-24-086-12	Tap Screw, M6 x 1.7 x 18
3	KH-24-393-16	Fuel Pump
4	KH-25-100-37-S	Plastic Nut
5	KH-25-237-31-S	Hose Clamp
—	KH-25-237-37-S	Spring Hose Clamp
6	KH-25-111-81-S	Fuel Line, 24"
7	KH-24-853-227-S	Carburator Kit
8	KH-24-431-02-S	Insulating Sleeve 14”
—	KH-25-431-22-S	Anti-Abrasion Sleeve
9	KH-25-155-51-S	Evaporative Connector

Ref.	Part Number	Description
10	KH-25-173-33-S	Masking Cap
11	KH-25-326-28-S	Evaporative Hose
12	KH-47-154-01-S	Cable Clip
13	KH-M-641060-S	Flange Nut, M6 x 1.0
14	KH-24-041-79-S	Intake Manifold Gasket
15	KH-24-041-83-S	Carburetor Gasket
16	KH-24-164-138-S	Intake Manifold
17	KH-M-629095-S	Stud, M6 x 1.0 x 96
18	KH-24-050-13-S	Fuel Filter
19	KH-25-454-05-S	Wire Tie

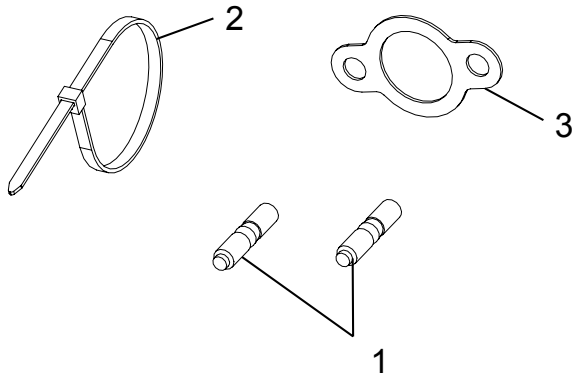

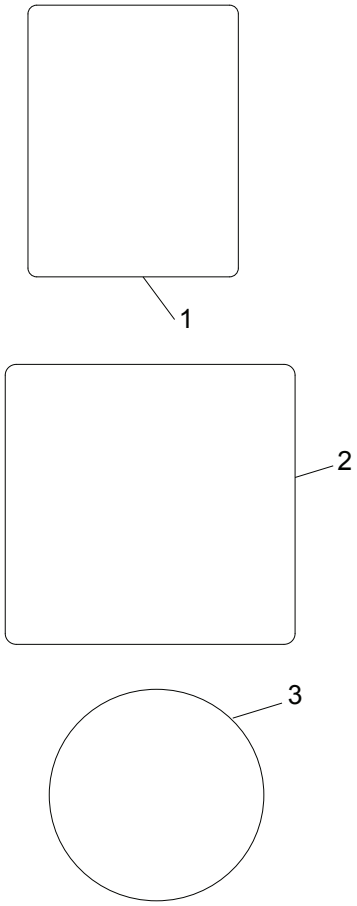

Ref.	Part Number	Description
1	KH-25-072-24-S	Stud, M8 X 1.25 X 33
2	KH-25-454-05-S	Tie
3	KH-24-041-49-S	Exhaust Gasket

Ref.	Part Number	Description
1	KH-25-113-70-S	Clear Laminate Decal
2	KH-24-113-357-S	HDAC 747cc/CV-CH732 Decal
3	KH-24-113-18-S	Grass Screen Decal

Notes



To order replacement parts, call a Customer Support Representative at (800) 965-4CUB.
Locate your nearest Cub Cadet dealer at (877) 282-8684
or visit www.cubcadet.com to find the nearest Cub Cadet dealer in your area.

CUB CADET LLC, P.O. BOX 361131 CLEVELAND, OHIO 44136-0019