Cub Cadet COMMERCIAL

Hydrostatic Zero-Turn Commercial Riding Mower

Professional Turf Equipment

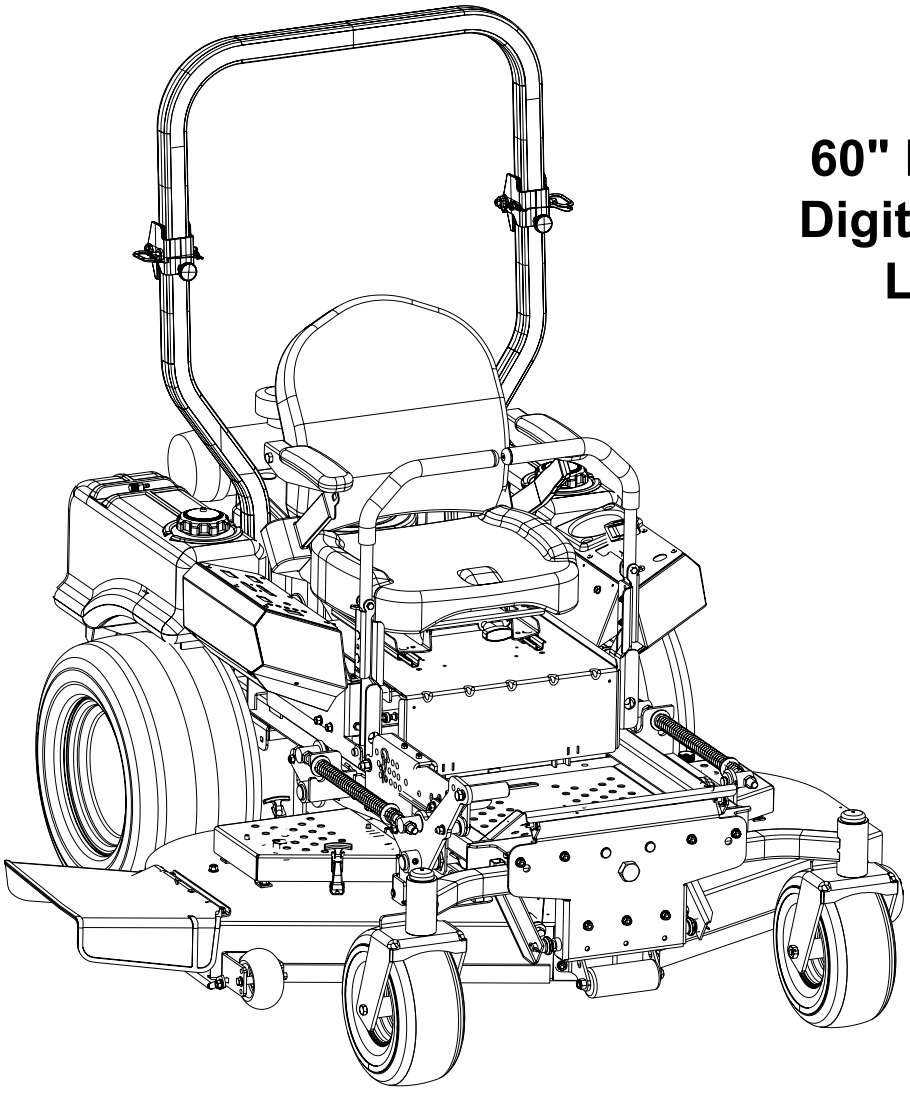

60" Fabricated Deck
Digital Fuel Injection,
Liquid Cooled

ILLUSTRATED PARTS LIST

TABLE OF CONTENTS

Frame Assembly 3
Brake Assembly . . . . . 4 and 5
60" Fabricated Cutter Deck . . . . . 6 and 7
60" Spindle Assembly . . . . . 8 and 9
Fuel Tank Assembly 10
Wheel Assembly 11
Front Caster Assembly 12
Seat/Floor Panel Assembly 13
Hydro Hose and Pump Assembly . . . . . 14 and 15
Control Assembly . . . . . 16 and 17
29 HP Kawasaki Engine Assembly 18
29 HP Electrical Assembly Kawasaki 19
Lift Assembly . . . . . 20 and 21

MODELS LISTED IN THIS MANUAL

29HP Tank,
53AJ8CTX750

Frame Assembly- Figure 1 and Parts List

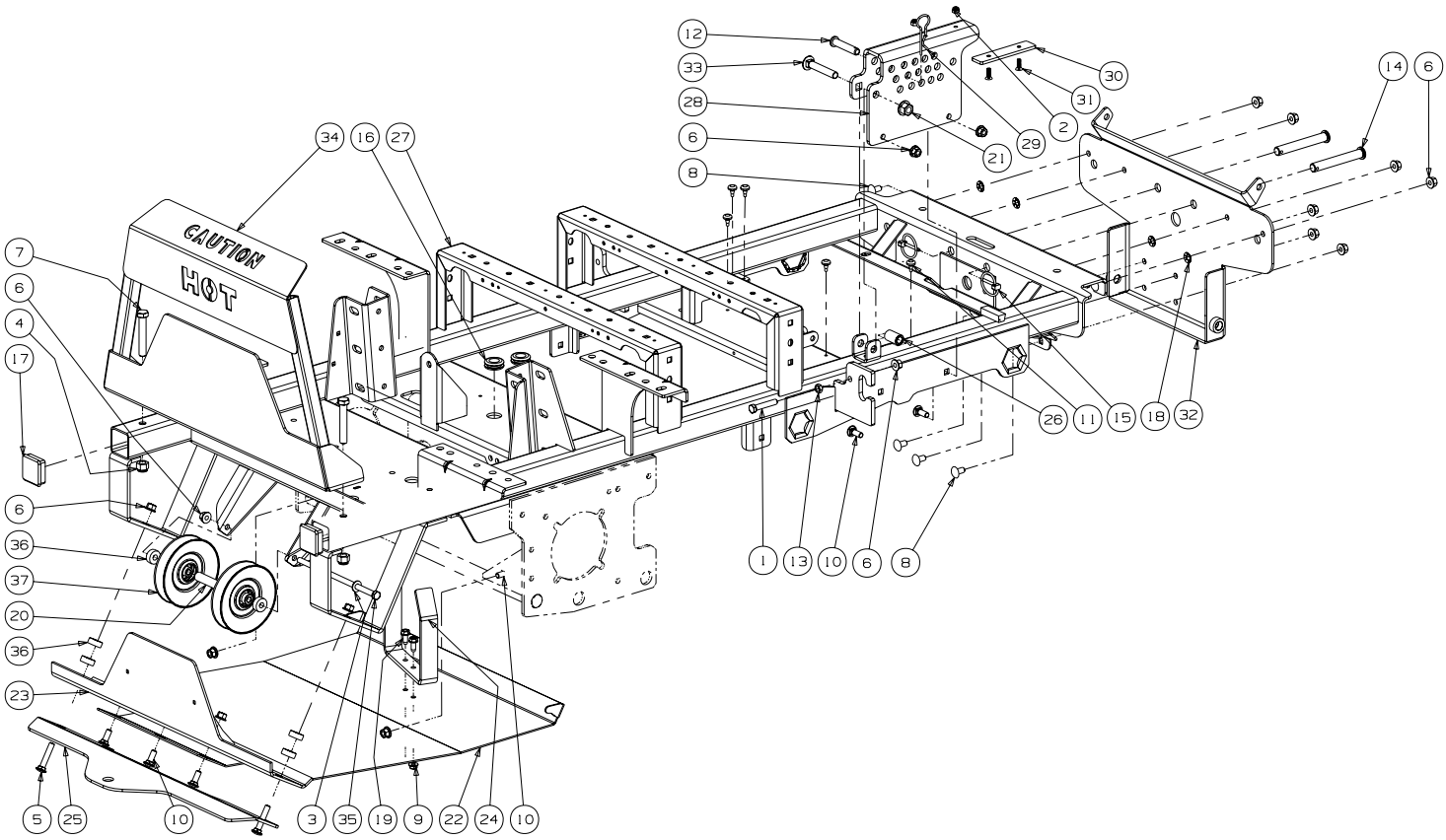

GD: 02003080-03/29/07

Ref. No.	Part No.	Description	Qty.	Ref. No.	Part No.	Description	Qty.
1	01005810	Hex Cap Screw 3/8-16 x 2.00	1	20	01009604	Spacer, .385 ID x .625 OD x 4.89	1
2	00012152	Lock Nut w/Nylon Insert	2	21	01010119	Nut, 1/2-13, Flangelock	1
3	00012158	Flat Washer, 3/8	1	22	02004037	Skid Plate	1
4	00012428	Lock Nut, Nylon Insert, 1/2-13	2	23	02002281	Guard Bracket	1
5	00014270	Carriage Bolt, 3/8-16 x 2.00	2	24	02004023	Belt Guide	1
6	00022560	Hex Nut, 3/8-16 Flange Lock	18	25	02002536	Hitch	1
7	00030046	Hex Head Cap Screw, 1/2-13 x 3.00	2	26	02002655	Spacer, .51 ID x .75 OD x 1.40	1
8	01000372	Carriage Bolt, 3/8-16 x .75 Long	7	27	02002949	Frame Assembly	1
9	01000635	Nut, 5/16-18, Hex Flange Lock	2	28	02003055	Lift Index Bracket	1
10	01000643	Carriage Bolt, 3/8-16 x 1.0	7	29	02003074	HitchPin, .120 Dia. x 3.0	1
11	01001170	Rubber Bumper, .62 OD x .22 Thick	6	30	02003749	Wear Plate, 1.125 x 5.00	1
12	01001776	Clevis Pin, .500 Dia. x 2.50 Lg.	1	31	02003505	Flat Head Cap Screw, 1/4-20 x .75	2
13	01002511	Nut, 3/8-16, Jam	1	32	02003524	Bracket Assembly, Frame, Front	1
14	01003282	Clevis Pin, .625 Dia x 4.375 Long	2	33	02003563	Carriage Bolt, 1/2-13 x 3.00	1
15	01003993	Linch Pin, 3/16 Dia.	2	34	02003663	Muffler Guard Assembly	1
16	01004040	Grommet, .75 ID	2	35	710-3248	Hex Head Cap Screw, 3/8-16 x 8.50	1
17	01005160	Plug, Square Tube	2	36	750-3119	Spacer, .406 ID x 1.00 OD x .380	6
18	01008225	Push Retainer, 3/8	4	37	756-3045	Idler Pulley, 5.06 Dia.	2
19	01008620	Self Tapping Screw 5/16-18 x .750	2				

Brake Assembly - Figure 2

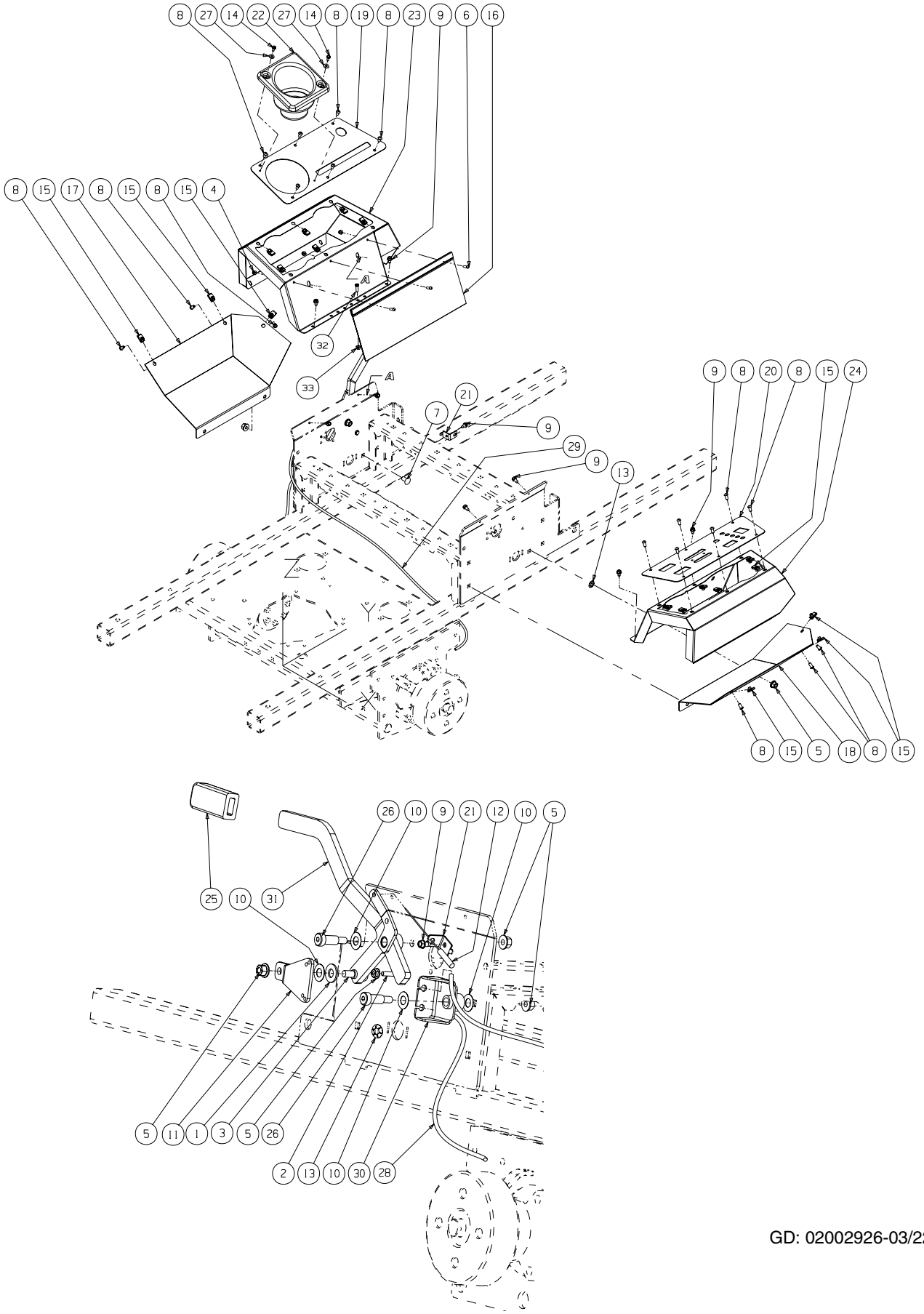

GD: 02002926-03/22/07

Brake Assembly - Parts List for Figure 2

Ref. No.	Part No.	Description	Qty.
1	00012577	Washer, 1/2 Zinc	1
2	01000643	Carriage Bolt, 3/8-16, 1.00	1
3	00011450	Shoulder Bolt, 1/2 x 1/2	1
4	00014608	Lock Nut, Nylon Insert, 10-32	3
5	00022560	Flange Lock Hex Nut, 3/8-16	6
6	00030906	Phillips Head Machine Screw, 10-32 x 5/8	3
7	01000372	Carriage Bolt, 3/8-16 x .75	2
8	01000443	Screw Button Head, 1/4-20 x .5	18
9	01000628	Screw, TT, 1/4-20, 0.5, Hex Index Washer	10
10	01000930	Washer, .508 ID x 1.0 OD x .020	4
11	02003841	Centering Bracket	1
12	01008198	Left Hand Brake Cable	1
13	01008225	Push Retainer, 3/8	2
14	01008531	Screw, #10-32 x 0.500	2
15	01008539	U-Nut, 1/4-20	18
16	02000362	Bag, Debris Storage	1
17	02002797	Lower Panel, LH	1
18	02002796	Lower Panel, RH	1
19	02002823	Control Panel Cover, LH	1
20	02002889	Control Panel Cover, RH	1
21	02002864	Brake Cable Mounting Bracket	2
22	02002874	Cup Holder	1
23	02002971	Control Panel, LH	1
24	02002972	Control Panel, RH	1
25	02003010	Parking Brake Grip	1
26	02003603	Shoulder Bolt, 1/2 x 1.00, 3/8-16	2
27	02003725	Washer, 3/16	2
28	02003770	Brake Cable, LH	1
29	02003774	Brake Cable, RH	1
30	02003776	Brake Cable Bracket	1
31	02003782	Brake Lever	1
32	00013131	Screw, Hex, Cap, 1/4-20 x .75	1
33	01002766	Lock Nut, 1/4-20	1

60" Fabricated Cutter Deck - Figure 3

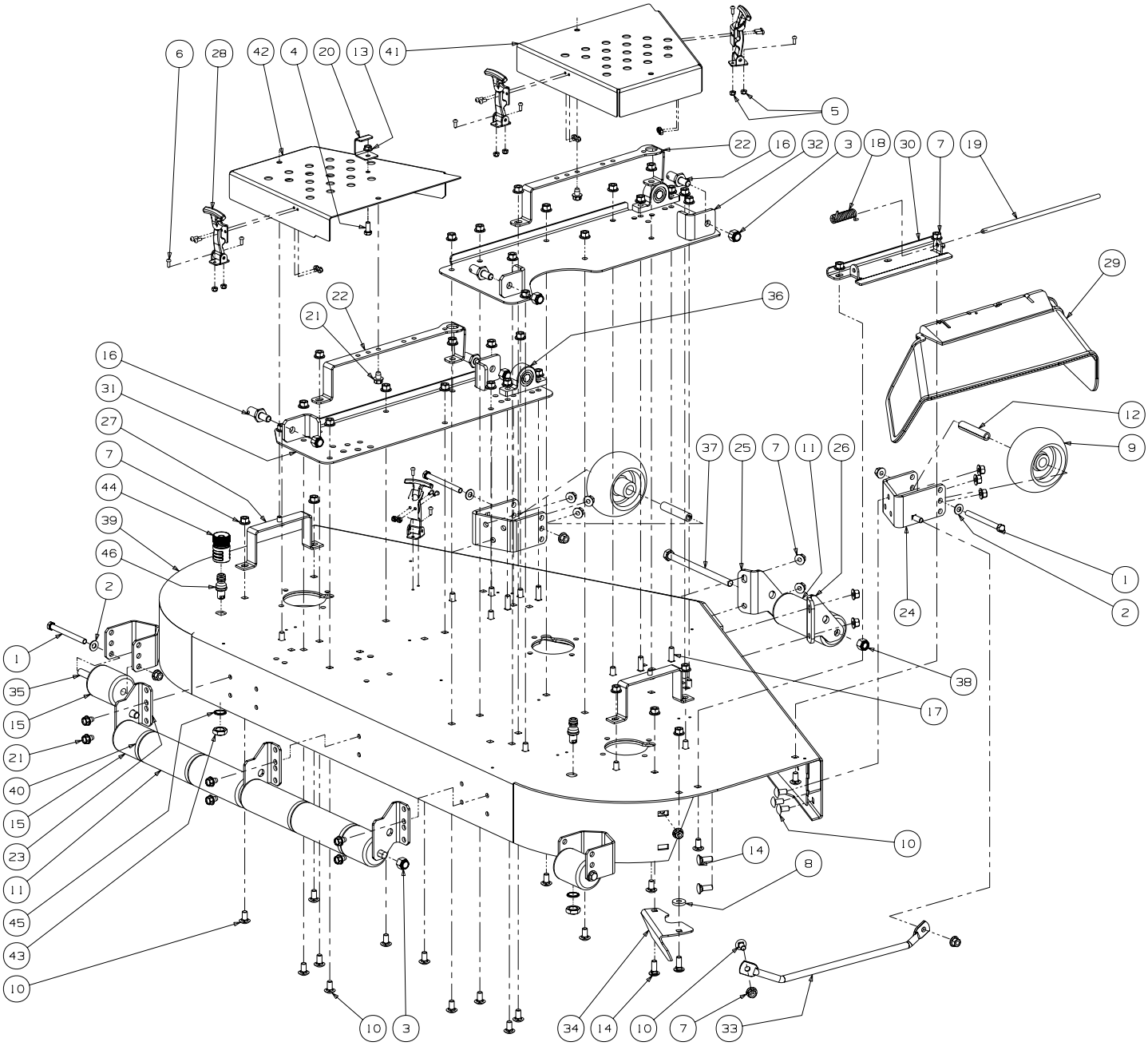

GD: 02002835-03/15/07

60" Fabricated Cutter Deck - Parts List for Figure 3

Ref. No.	Part No.	Description	Qty.
1	00011925	Hex Cap Screw, 3/8-16, 3.75	4
2	00012158	Flat Washer, 3/8	4
3	00012428	Lock Nut, Nylon Insert, 1/2-13	5
4	00013406	Hex Cap Screw, 5/16-18 x .75	1
5	00014608	Lock Nut, Nylon Insert, 10-32	16
6	00017778	Phillips Head Screw, 10-32	16
7	00022560	Flange Lock Hex Nut, 3/8-16	50
8	00083192	Idler Washer	1
9	01000343	Complete Wheel, 5.00 Dia.	2
10	01000372	Carriage Bolt, 3/8-16 x .75 Lg.	35
11	01000385	Front Roller	5
12	01000398	Wheel Spacer	2
13	01000635	Nut, 5/16-18, Hex Flange Lock	1
14	01000643	Carriage Bolt, 3/8-16 x 1	7
15	01001169	Grass Catcher Roller	4
16	01001745	Pin, 5/8 Dia. x 1.2 Lg.	4
17	01002010	Carriage Screw, 3/8-16 x 1.25	4
18	01003253	Torsion Spring, 0.4ID x 2.16Lg	1
19	01003254	Chute Deflector Rod	1
20	01004109	Stop Bracket	1
21	01004304	Hex Index Washer Screw, 3/8-16, .5	8
22	01004685	Belt Cover Support	2
23	01005364	Deck Roller Mount Bracket	3
24	01005260	Anti-Scalp Wheel Front Mount Bracket	2
25	01005256	Left Hand Front Roller Mount Bracket	1
26	01005258	Right Hand Front Roller Mount Bracket	1
27	01005437	Outer Belt Cover Support Assembly	2
28	01005869	T-Handle Latch Draw	4
29	01006693	Chute Deflector	1
30	01008226	Chute Deflector Bracket	2
31	01008633	Left Hand Mount Deck Bracket Assembly	1
32	01008635	Right Hand Deck Bracket Assembly	1
33	01008644	Finger Guard	1
34	01009300	Chute Bracket	1
35	01009808	Spacer, .385 x .50 x 3.045	2
36	02000109	Pillow Block	2
37	01006961	Hex Cap Screw, 1/2-20 x 7.50	1
38	02002299	Lock Nut, Nylon Insert, 1/2-20	1
39	02002531	60 Deck Assembly	1
40	02002800	J-Hook w/ Threaded Roller	1
41	02002831	Right Hand Deck Belt Cover	1
42	02002832	Left Hand Deck Belt Cover	1
43	712-0641	Hex Nut, M16-1.5	2
44	721-04041	Water Nozzle Adaptor	1
45	736-0760	Lock Washer, 17 x 23.8 x 1.95	2
46	737-04003B	Deck Water Nozzle	2

60" Fabricated Deck Spindle Assembly - Figure 4

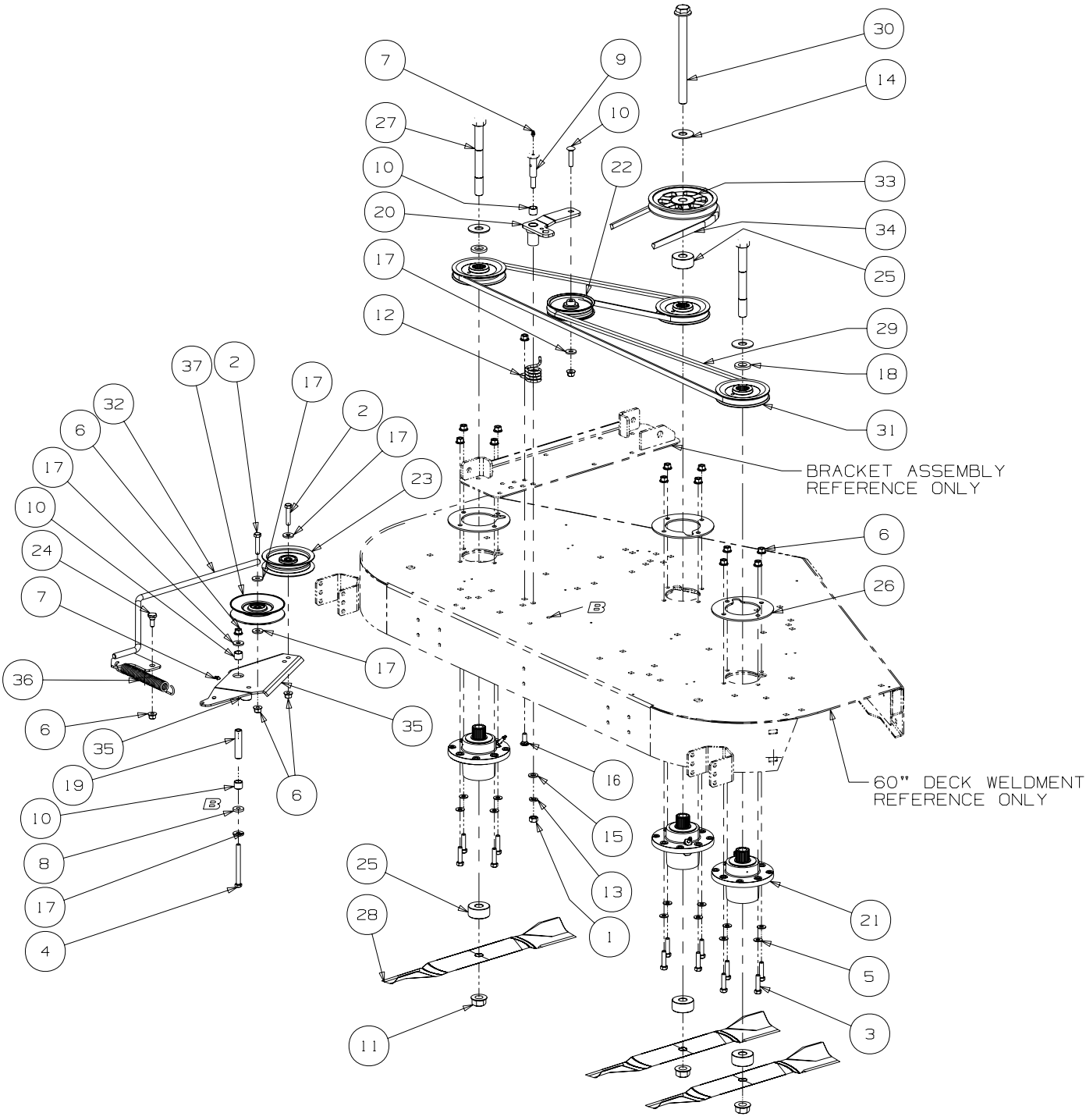

GD: 02003627-10/30/06

60" Fabricated Deck Spindle Assembly - Parts List for Figure 4

Ref. No.	Part No.	Description	Qty.
1	00005763	Hex Nut, 7/16-14	1
2	00008495	Hex Cap Screw, 3/8-16 x 1-3/4	2
3	00011438	Hex Cap Screw, 3/8-16 x 1-1/2	12
4	00011925	Hex Cap Screw, 3/8-16, 4.00	1
5	00012158	Flat Washer, 3/8	12
6	00022560	Flange Lock Hex Nut, 3/8-16	18
7	00060078	Grease Fitting, 1/4-28 x 3/16	2
8	00083192	Idler Washer	1
9	01000302	Shoulder Screw, 7/16-14	1
10	01000364	Hex Carriage Screw, 3/8-16, 1.75	1
11	01000380	Flange Hex Nut, 3/4-16	3
12	01000387	Torsion Idler Spring	1
13	01000389	Lock Washer, 7/16	1
14	01000392	Flat Washer, .781 ID 2.00 OD, .105	3
15	01000393	Flat Washer, .469 ID, .875 OD, .105	1
16	01000643	Carriage Bolt, 3/8-16 x 1	1
17	01000723	Flat Washer, .406 ID, 1.0 OD, .105	6
18	01003123	Spacer .812 ID x .268 LG	2
19	01003245	Spacer, .39 ID x .625 OD x 2.75	1
20	01005737	Idler Arm Assembly, Deck Spindle includes:	1
	01000308	Bearing	2
21	01003532	Aluminum Spindle Assembly	3
22	01004081	Flat Pulley	1
23	01004101	Idler Pulley, 4.06 OD	1
24	01004118	Shoulder Screw, .50 x .27 Lg., 3/8-16	1
25	01004415	Spacer, .760 ID x 2.00 OD x 1.1	4
26	01005434	Aluminum Spindle Support Plate	3
27	01005213	Hex Cap Screw, 3/4-16, 7.00	2
28	01005338	Hi-Lift Blade, 21.0, 0.756 ID	3
29	01005376	V-Belt, A Section x 122.3	1
30	01005388	Hex Cap Screw, 3/4-16, 9.00	1
31	01005616	V-Pulley, 5.00 OD	3
32	01005690	Spring Tension Rod Assembly	1
33	01008081	V-Pulley, Cast, 6.360 OD	1
34	01009583	V-Belt, B Section x 147.4	1
35	02003489	Idler Arm Assembly includes:	1
	01000308	Bearing	2
36	02003712	Extension Spring, .94 x OD x 7.57	1
37	756-3045	Idler Pulley, 5.06 Dia.	1

Fuel Tank Assembly - Figure 5 and Parts List

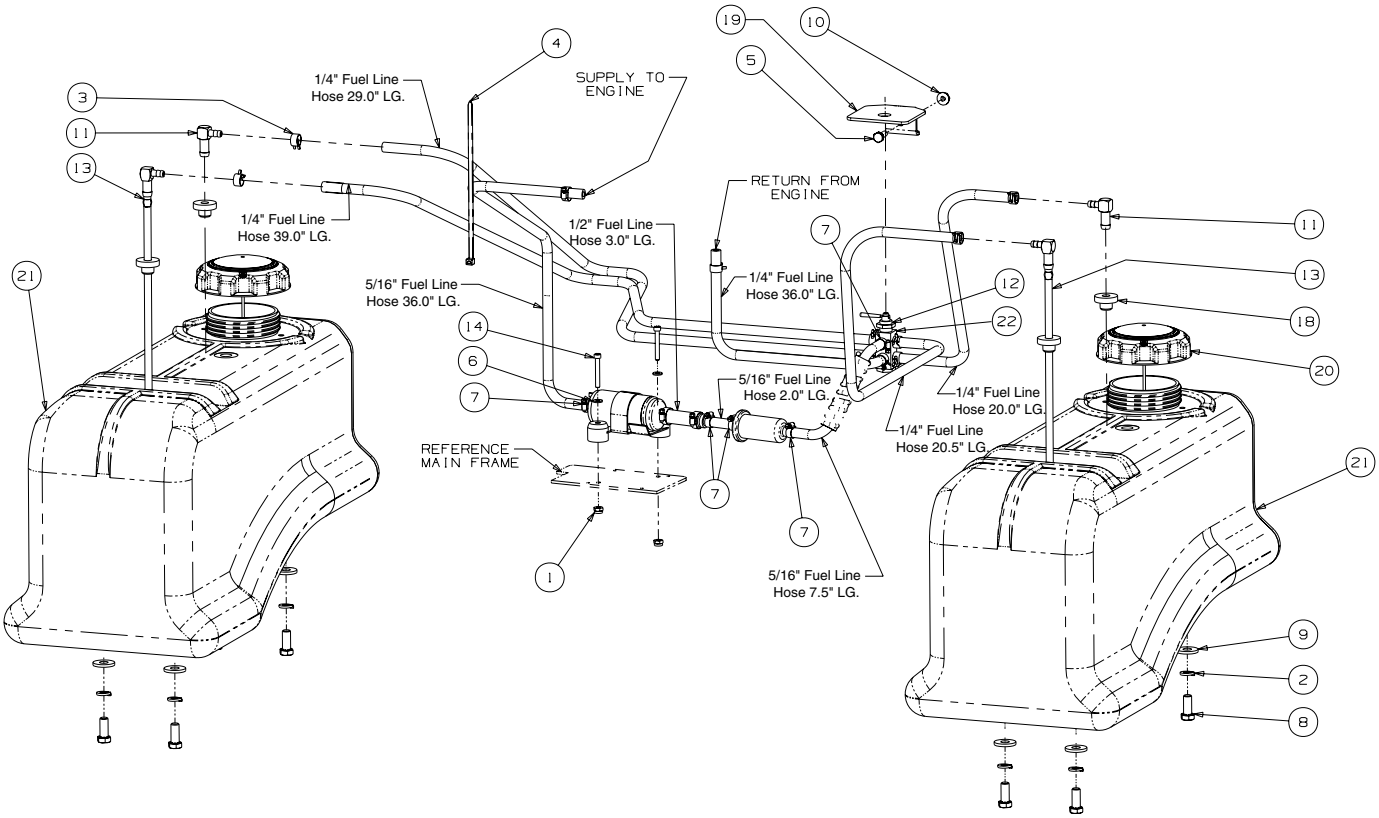

GD: 02003650-04/05/07

Ref. No.	Part No.	Description	Qty.	Ref. No.	Part No.	Description	Qty.
1	00006194	Nut, 10-24, Nylon Insert	2	12	01009812	Shut Off Fuel Valve	1
2	00012157	Lock Washer, 3/8	8	13	01009821	Fuel Fitting, Pickup	2
3	00012235	Clamp, Union	10	14	01009831	Socket Head Screw, 10-24 x 1.25	2
4	00012470	Cable Tie	6	15	--	Hose, 1/4" Fuel Line (in inches)	144.5
5	00013131	Hex Cap Screw, 1/4-20 x 3/4	1	16	--	Hose, .31 ID x .56 OD Fuel Line (in inches)	45.5
6	00016771	Washer, 3/16	2	17	--	Fuel Hose, .50 ID x .75 OD (in inches)	3
7	01000215	Hose Clamp	8	18	02002253	Fuel Tank Grommet	4
8	01000368	Hex, Cap Screw, 3/8-16, .88	8	19	02003034	Fuel Valve Mounting Bracket	1
9	01000723	Flat Washer, .406 ID, 1.0 OD, .105	8	20	02003809	Fuel Cap 3.5, Tethered	2
10	01002766	Hex Flange Lock Nut, 1/4-20	1	21	02003843	Fuel Tank	2
11	01009809	Fuel Fitting, Return	2	22	01004340	Lock Washer	1

Wheel Assembly - Figure 6 and Parts List

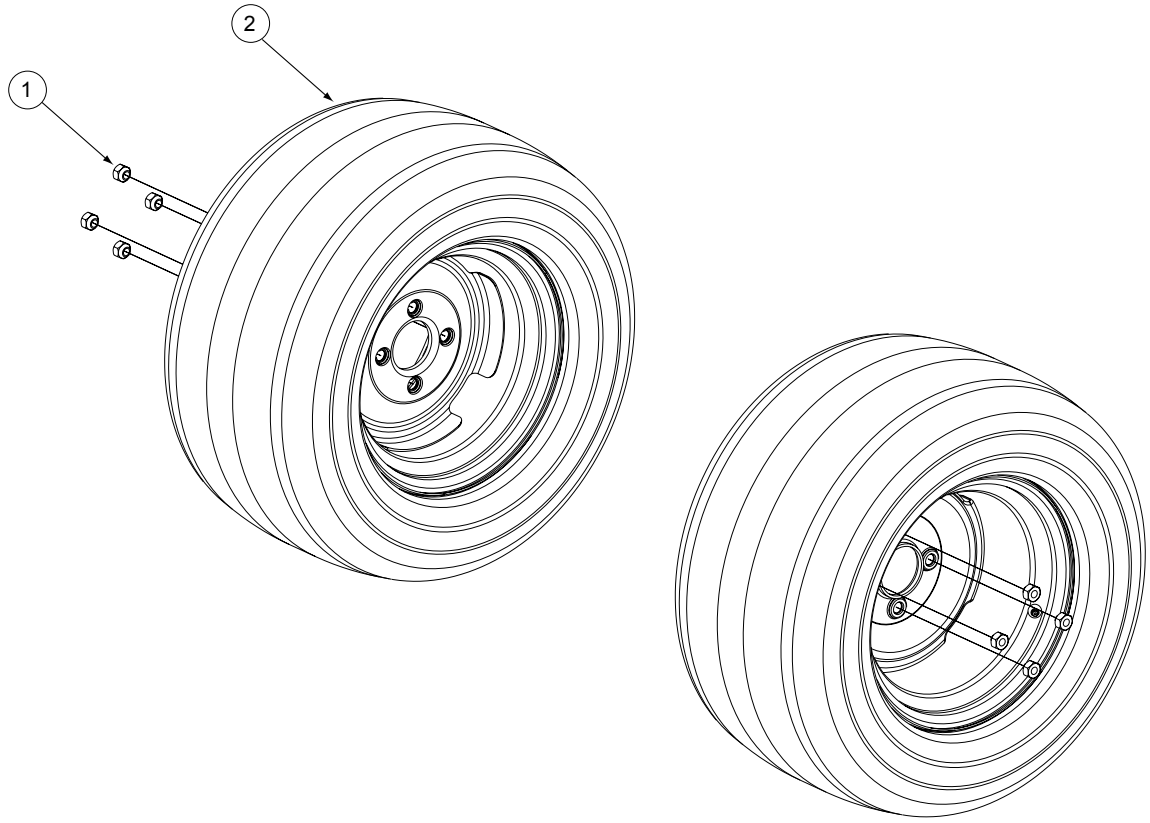

GD: 02002669-10/04/06

Ref. No.	Part No.	Description	Qty.
1	00012187	Lug Nut, 1/2-20	8
2	02002668	Wheel Assembly, 24 x 12.00-12, Beige	2
		Includes:	
	00073975	Tire, 24 x 12.00-12,Turf Master	
		Rim, 12 Dia x 8.50 width	
OPTIONAL TIRES			
	01002182	Wheel Assembly, 24 x 12.00-12, Turf Saver	
	01004473	Tire, 24 x 12.00-12, Turf Saver	

Front Caster Assembly - Figure 7 and Parts List

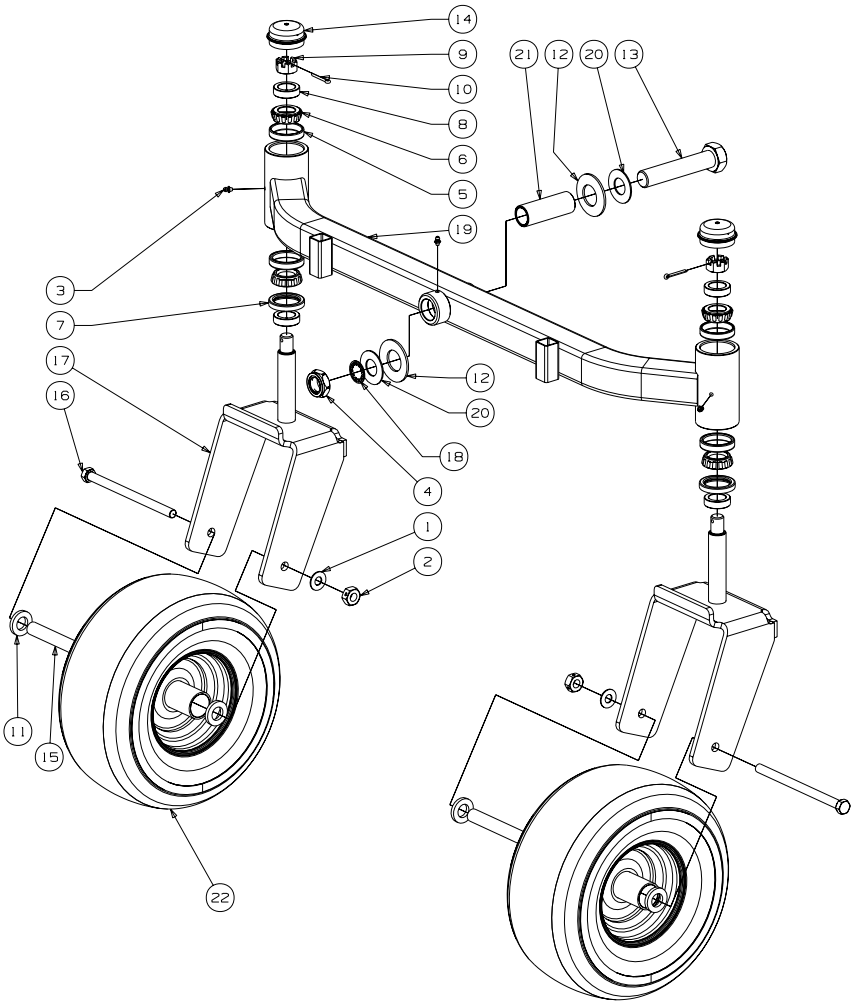

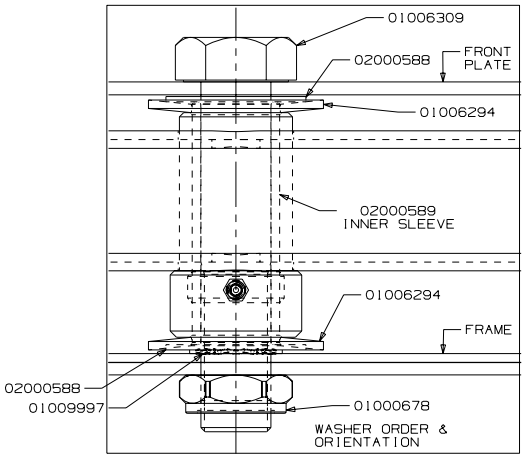

GD: 02002820-10/04/06

Ref. No.	Part No.	Description	Qty.	Ref. No.	Part No.	Description	Qty.
1	00012577	Washer, 1/2 x 1 Shim	2	14	01006347	Grease Cap, 1.986 OD	2
2	00023287	Nut, 1/2-20, Center Lock	2	15	01006912	Wheel Spacer	2
3	00060078	Grease Fitting, 1/4-28 x 3/16	3	16	01006961	HHCS, 1/2-20, 7.50	2
4	01000678	Nut, Jam, 1.0-14, Insert Lock	1	17	01007407	Yoke, Caster Wheel	2
5	01002620	Cup Bearing	4	18	01009997	Retainer Extension, Self Locking	1
6	01002621	Bearing Cone	4	19	02000439	Front Axle Assembly	1
7	01002622	Seal	2	20	02000588	Flat Washer, 1.00 ID	2
8	01002624	Ring Seal	4	21	02000589	Spacer, 1.005 ID x 1.25 OD x 3.6	1
9	01002626	Slotted Nut, 3/4-16	2	22	02002821	Wheel, 13 x 6.50 x 6.0, Beige, includes	2
10	01002627	Cotter Pin, 5/32, 1.25	2		02002108	Tire	1
11	01003123	Spacer, .812 ID x .218LG	4		02002106	Roller Bearings	2
12	01006294	Bell Washer, 1.25 ID x 2.5 x .157	2		02002107	Retainer Bushings	2
13	01006309	Hex Cap Screw, 1-14 x 5.0	1				

Seat/Floor Panel Assembly- Figure 8 and Parts List

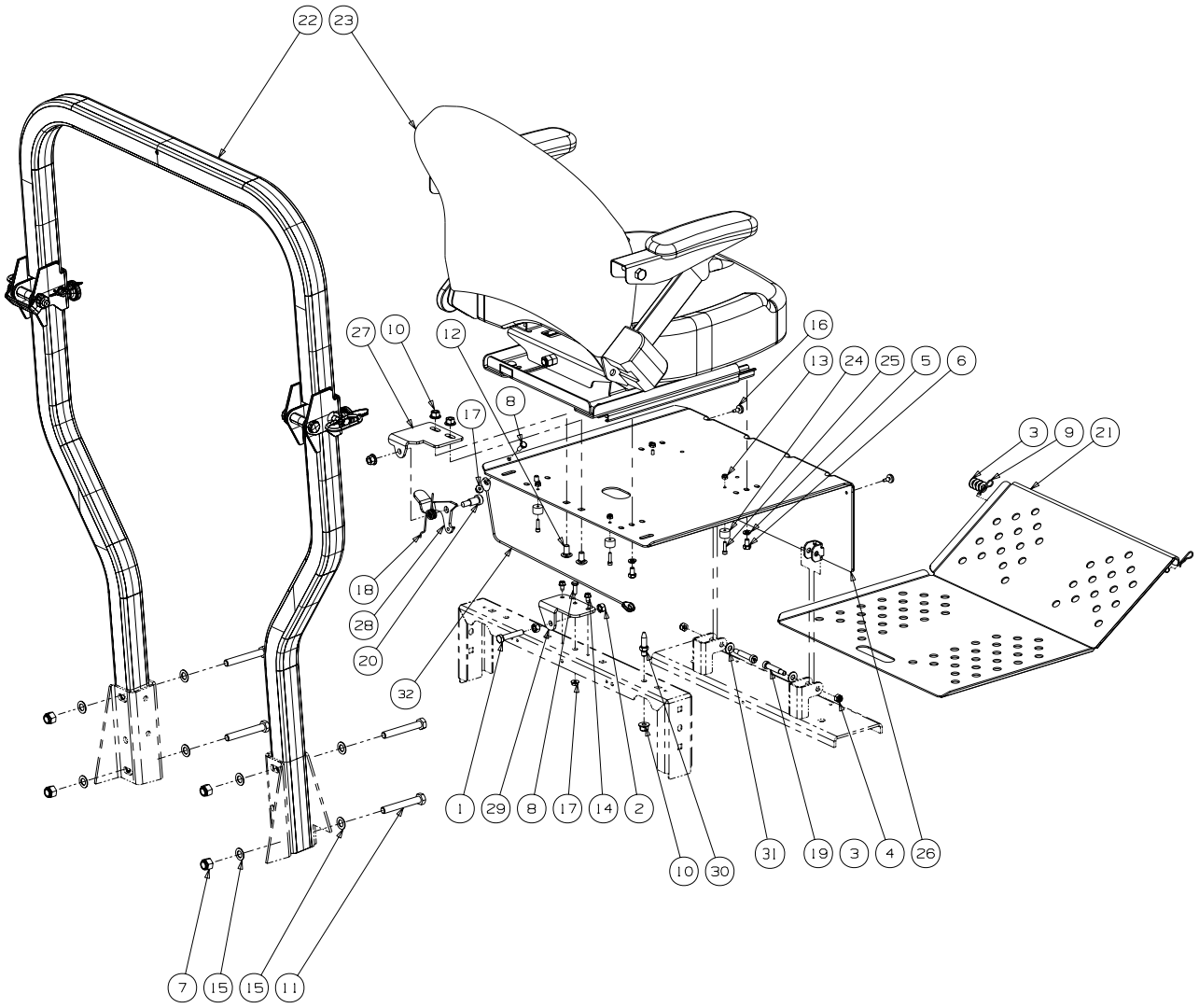

GD: 02002559-03/22/07

Ref. No.	Part No.	Description	Qty.	Ref. No.	Part No.	Description	Qty.
1	00002528	Hex Cap Screw 3/8-16 x 2.00	1	17	01002766	Lock Nut, 1/4-20	2
2	00006131	Hex Nut, 3/8-16	2	18	01008140	Deck Lift Spring, Left Hand	1
3	00012158	Washer	AR	19	01009459	Shoulder Bolt, .375 x 1.50	2
4	712-04063	Flange Lock Nut, 5/16-18	2	20	02002091	Shoulder Bolt, 1/2 x 3/4, 3/8-16	1
5	00012168	Lock Washer, 5/16	4	21	02002335	Floor Panel Assembly	1
6	00012178	Hex Cap Screw, 5/16-18 x 1/2	4	22	02002714	Foldable Rops Assembly	1
7	00012428	Nut, 1/2-13, Nylon Insert	4	23	02002942	Seat w/ Seat Belt & Suspension	1
8	00013131	Screw, Hex, Cap, 1/4-20 x .75	2	24	02002963	Rubber Stop with Washer	4
9	00021956	Hair Pin, 3/8-1/2	2	25	02002964	Standard Cap Screw, #10-24 x .75	4
10	00022560	Flange Lock, Hex Nut, 3/8-16	4	26	02002344	Seat Plate Assembly	1
11	01000226	Hex Cap Screw, 1/2-13 x 3.50	4	27	02003748	Seat Latch Bracket	1
12	01000372	Carriage Bolt, 3/8-16 x .75 Long	2	28	02003732	Latch Lever Bracket	1
13	01000523	Nut, #10-24, Nylon Lock	4	29	02003739	Latch Bracket	1
14	01000628	Screw, TT, 1/4-20, 0.5, Hex Index Washer	2	30	02003745	Adjustable Stud	1
15	01000873	Washer, .536 ID x .930 OD x .05	8	31	01000723	Flat Washer, .406 ID, 1.0 OD, .105	2
16	01001170	Rubber Bumper, .62 OD x .22 Thick	2	32	02004062	Cable Support	1

Hydro Hose and Pump Assembly- Figure 9

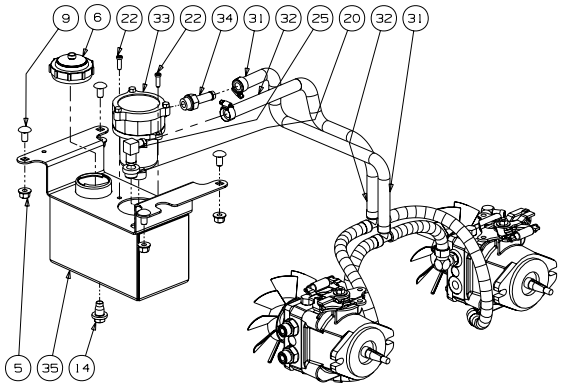

Pilot System

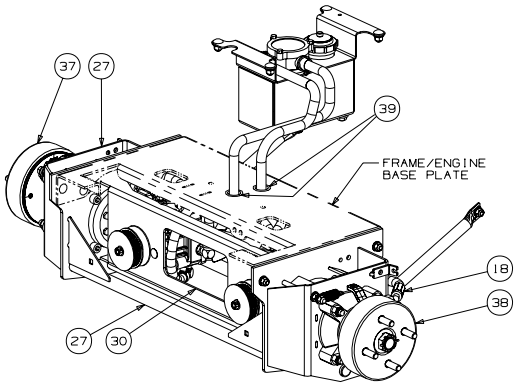

Hydraulic Drive System

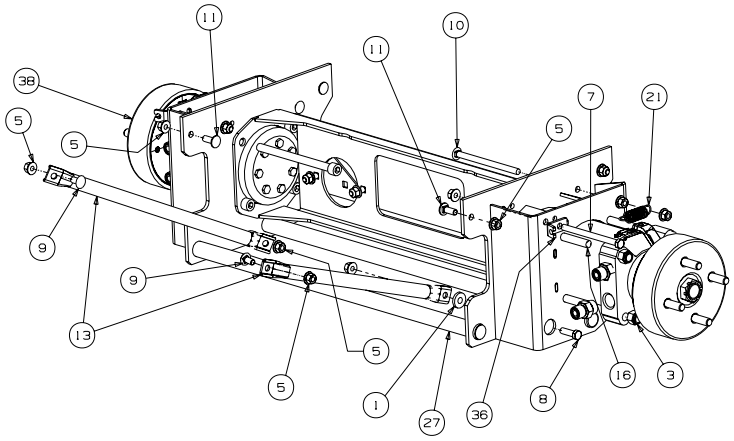

Motor Installation

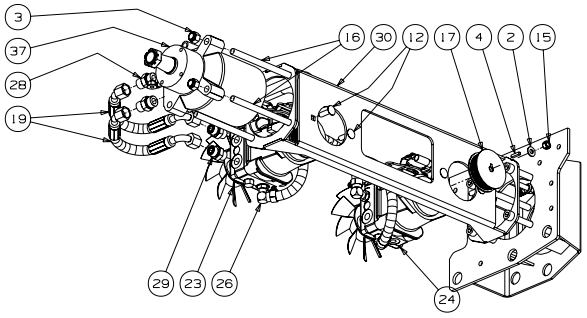

Pump & Motors

GD: 02002945-04/03/07

Hydro Hose and Pump Assembly - Parts List for Figure 9

Ref. No.	Part No.	Description	Qty.
1	00083192	Idler Washer	2
2	00012158	Flat Washer, 3/8	2
3	00012428	Washer lock 3/8 zinc	8
4	00020628	Key, 3/16" x 7/8"	2
5	00022560	Flange Lock Hex Nut, 3/8-16	22
6	00030261	Cap, Hydro Oil Tank	1
7	00034167	Hex Cap Screw, 3/8-16 x 5.00	2
8	01000369	Hex Cap Screw, 3/8 -16 x 1.25	2
9	01000372	Carriage Bolt, 3/8-16 x .75 LG.	6
10	01000642	Carriage Bolt, 3/8-16 x 5.50	2
11	01000643	Carriage Bolt, 3/8-16 x 1	4
12	01002010	Carriage Screw, 3/8-16 x 1.25	4
13	01001618	Strut Frame	2
14	01004192	Oil Pan Drain Plug w/ Seal	1
15	01007309	Hex Nut, 3/8-24	2
16	01008449	Socket Head Capscrew, 1/2-13; 6-1/2	8
17	01009593	Hydro Pulley Pump	2
18	02000066	Hose Assembly, RH	2
19	02000067	Hose Assembly, LH	2
20	02000296	Grommet Fitting, .54 ID x .78 OD	1
21	02000401	Spring Extension, .740 OD x 2.656	2
22	02000841	Socket Low Head Cap Screw, 1/4-20 x 0.75	2
23	02001100	Hydro Pump, BDP-12, LH	1
	01009631	Kit, Fan	1
24	02001101	Hydro Pump, BDP-12, RH	1
	01009631	Kit, Fan	1
25	02001151	Fitting Elbow Spur, 5/8 x 1/2	1
26	02001160	Fitting Elbow, 9/16 x 1/2	4
27	02001492	Hydro Motor Frame Assembly	1
28	02001715	Adaptor Fitting, 8 x 10	4
29	02001975	Adaptor Fitting, 8 x 8	4
30	02002068	Hydro Pump Mounting Bracket	1
31	02002069	Hose Assembly, Pilot includes:	1
	02001175	Tee Fitting	
	02001111	Hose Clamp	
	02002295	Hose Clamp	
	--	Hose, .50 ID x .75 OD	
32	02001107	Hose Assembly, Drain includes:	1
	02001175	Tee Fitting	
	02001111	Hose Clamp	
	02002295	Hose Clamp	
	--	Hose, .50 ID x .75 OD	
33	02002257	Hydraulic In-Tank Filter includes:	1
	02002258	Filter Element	1
34	02002557	Fitting, 3/4 ORB x 1/2 Tube	1
35	02002703	Hydraulic Tank Assembly	1
36	02002899	Rear Cable Mounting Bracket	2
37	02002967	Hydro Motor, Left Hand Assembly w/ Brake & Drum	1
38	02002968	Hydro Motor, Right Hand Assembly w/ Brake & Drum	1
39	01004040	Gromment, .75 ID	2

NOTE: Lubricant, 02002058 Quarts 2.00

Control Assembly- Figure 10

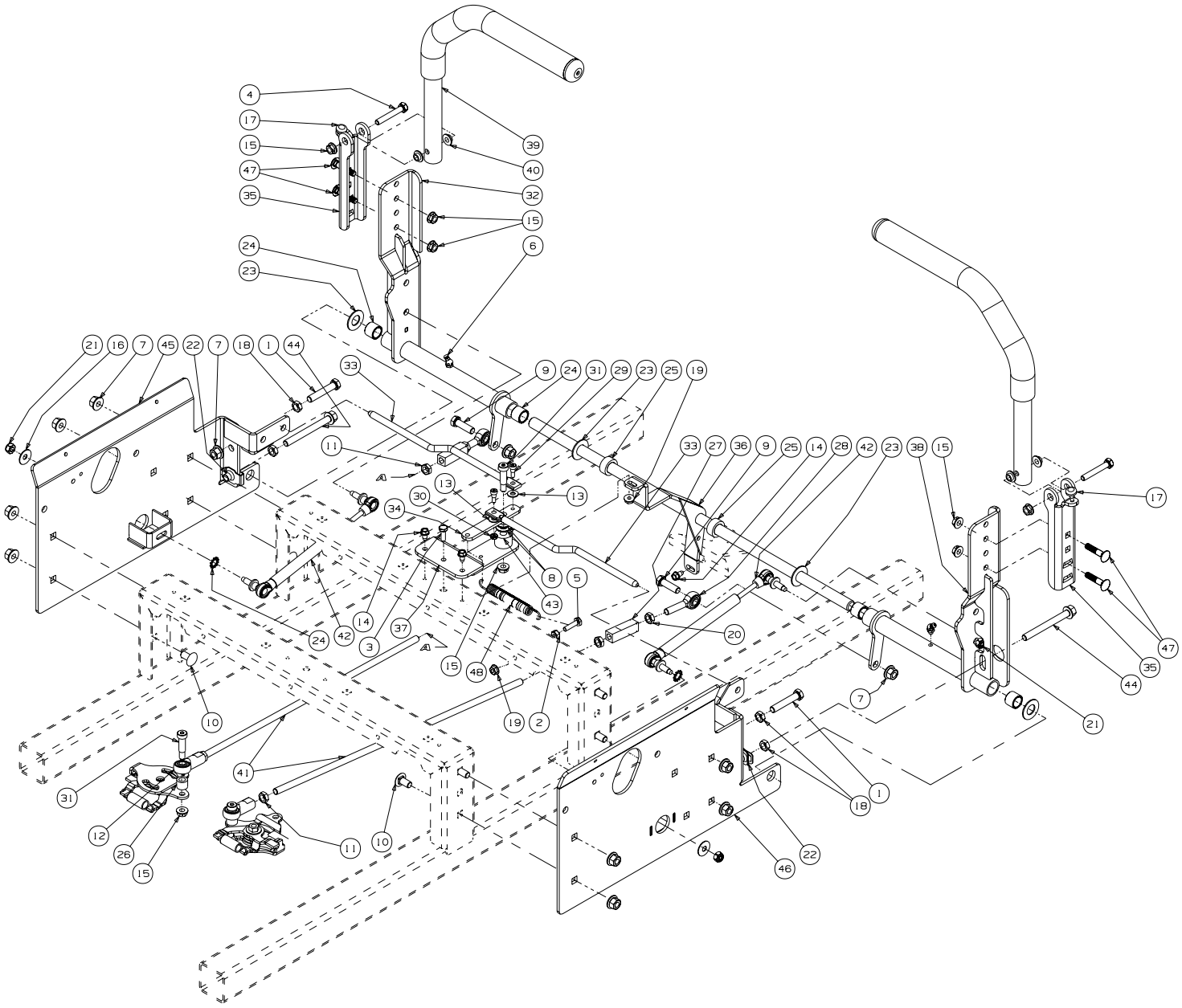

GD: 02003530-02/20/07

Control Assembly - Parts List for Figure 10

Ref. No.	Part No.	Description	Qty.	Ref. No.	Part No.	Description	Qty.
1	00002528	Hex Cap Screw 3/8-16 x 2.00	2	27	01007734	Turnbuckle	2
2	00012186	Hex Nut, 1/4-20	1	28	01008367	B/Joint, 3/8-24, Left Hand Female	2
3	00013131	Screw, Hex, Cap, 1/4-20 x .75	1	29	01009322	Shoulder Bolt, 1/4 x 1/4	2
4	00013198	Hex Cap Screw, 5/16-18 x 2.00	2	30	01009377	Nut w/ Star Washer, 10-24	2
5	00013416	HHCS, 1/4-20 x 1.00	1	31	02000069	Screw, Shoulder Control Rod	3
6	00021958	Grease Fitting, 1/4-28, 45 degree	2	32	02002931	Lapbar Control Assembly, LH	1
7	00022560	Hex Nut, 3/8-16, Lock Flange	12		01004265	Bearing	2
8	00061053	Washer, 3/8, SS	2	33	02002542	Brake/Control Rod	2
9	01000369	Hex Cap Screw, 3/8-16 x 1.25	2	34	02002543	Lapbar Control Arm	1
10	01000372	Carriage Bolt, 3/8-16 x .75	8	35	02002545	Lapbar Pivot Bracket	2
11	01000450	Hex Jam Nut, 3/8-24	4	36	02002555	Lapbar Control Shaft Assembly	1
12	01000451	B/Joint, 3/8-24, Right Hand Female	2	37	02002657	Lapbar/Brake Control Mounting Bracket	1
13	01000600	Flat Washer, 1.4 x .630 x .0515	2	38	02002932	Lapbar Control Assembly, RH	1
14	01000628	Screw, TT, 1/4-20, 0.5, Hex Index Washer	3		01004265	Bearing	2
15	01000635	Nut, Lock, HexFlange, 5/16-18	9	39	02003024	Lapbar Assembly includes:	2
16	01000960	Belle Washer, .325 x .930 x .045	2		02002549	Control Handle Pivot Tube	2
17	01001170	Rubber Bumper, .62 OD x .22 Thick	2		02002662	Grip, 1.0	2
18	01002511	Nut, 3/8-16, Jam	4	40	02003419	Bushing, .310 x .172 x .688 x .06	4
19	01002766	Hex Flange Lock Nut, 1/4-20	2	41	02003532	Control Rod, 3/8-24 x 19.50	2
20	01002986	Nut, 3/8-24, Jam, LH Third	2	42	02003653	Cylinder Return to Neutral	2
21	01003561	Nut, Hex, Center Lock, M8	4	43	02003664	Spacer, .405 ID x 1.0 OD x .72	1
22	01003947	U-Nut, 3/8-16, .75	2	44	02003666	Hex Cap Screw, 3/8-16 x 3.50	2
23	01004003	Flat Washer, 5/8 Nylon	4	45	02003885	Side Panel, Control, Left	1
24	01005851	External Washer, 3/8	2	46	02003880	Side Panel, Control, Right	1
25	01006350	Shaft Collar	2	47	710-0262	Carriage Bolt, 5/16-18 x 1.50	4
26	01007312	Spacer, .625 OD x .385 ID x 1/2	2	48	732-0470A	Extension Spring, .53 OD x 4.75	1

29HP Kawasaki Engine Assembly- Figure 11 and Parts List

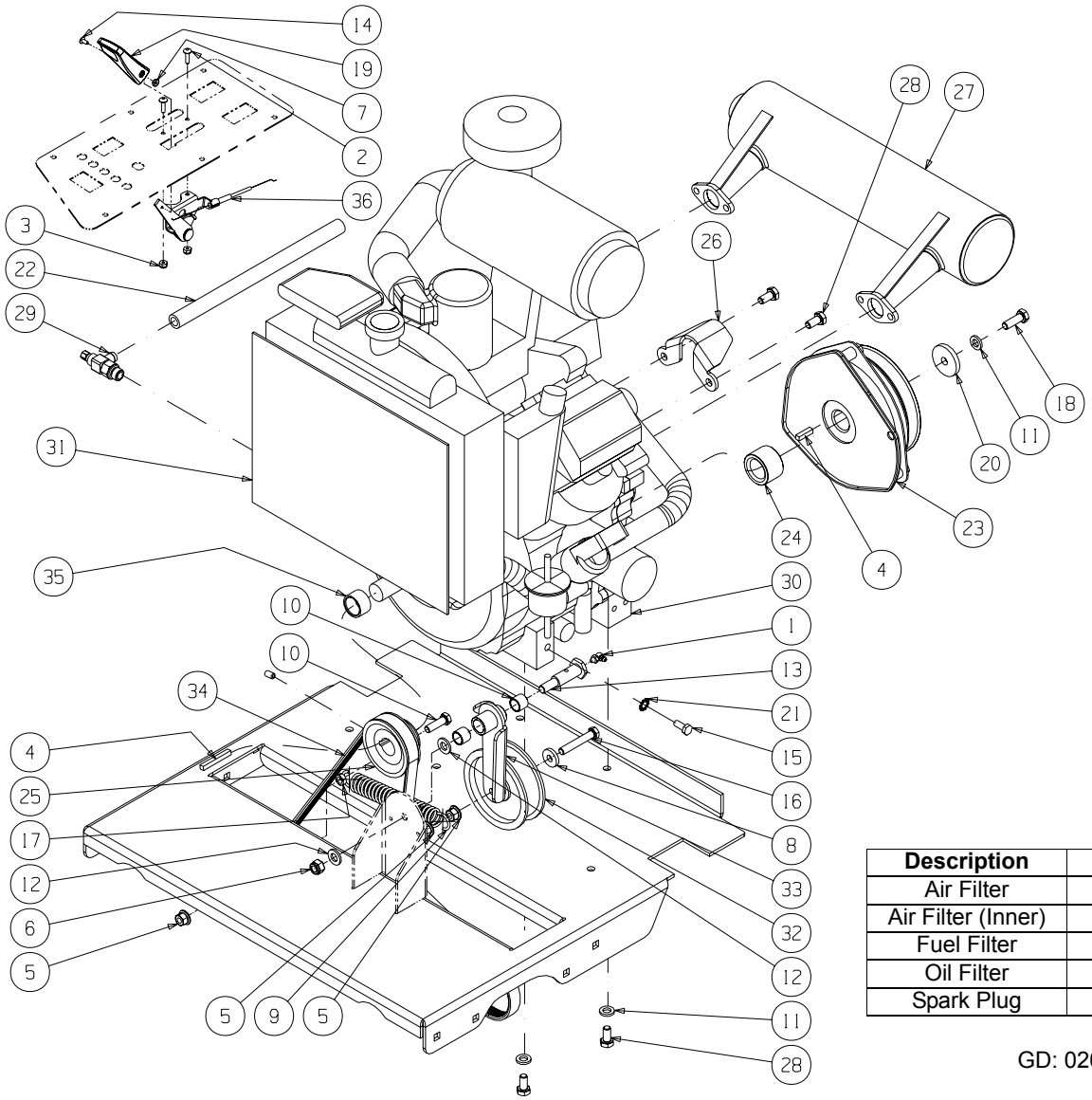

Description	Part Number
Air Filter	KM-11013-7020
Air Filter (Inner)	KM-11013-7019
Fuel Filter	KM-49019-1055
Oil Filter	KM-49065-2078
Spark Plug	KM-BPR4ES

GD: 02003529-11/08/06

Ref. No.	Part No.	Description	Qty.	Ref. No.	Part No.	Description	Qty.
1	00012226	Grease Fitting, 1/4-28 90 Degree	1	20	01005314	Flat Washer, 7/16 ID x 1.75 OD x .25	1
2	00014602	Round Hd. Machine Screw, 10-32 x 3/4	2	21	01005851	Washer, 3/8 ID, External Tooth	2
3	00014608	Lock Nut, Nylon Insert, 10-32	2	22	01006223	Oil Drain Extension Hose	1
4	00021517	Key Stock, 1/4 x 1/4 x 2.00	2	23	01009590	Clutch Brake	1
5	00022560	Nut, 3/8-16, Hex Flange Lock	3	24	01009591	Spacer, 1.75 OD x 1.135 ID x 1.125	1
6	00027279	Nut, 7/16-14, Nylock	1	25	01009594	Pulley, 3.05 OD x 1.0 Bore	1
7	00060056	Nut Washer, W/Star, 8-32	1	26	01009596	Clutch Retainer Bracket	1
8	00083192	Washer, 3/8	1	27	01009614	Muffler, 29HP Horizontal, Kawasaki	1
9	01000199	Extension Spring, 1.0 OD x 5.00	1	28	01009616	Hex Head Cap Screw, M10 x 1.5, 20mm	6
10	01000369	Hex Cap Screw, 3/8-16 x 1.25	1	29	01009621	Oil Valve	1
11	01000389	Lock Washer, 7/16	5	30	01009625	29HP Digital Fuel Injection Engine, Kawasaki	1
12	01000393	Washer, .469 ID x .875 OD x .105	2	31	01009634	Screen, Kawasaki 29HP Radiator	1
13	01000505	Shoulder Screw, 7/16-14	1	32	02000302	Idler Pulley, 3.5 OD	1
14	01000721	Machine Screw, 8-32, .375	1	33	02000305	Idler Arm Assembly	1
15	01000981	HHCS, M10 x 1.25, 20mm	2		01000308	Bearing	2
16	01001366	HHCS, 3/8-16 x 2.25	1	34	02000408	V Belt	1
17	01002511	Jam Nut, 3/8-16	1	35	02002259	Spacer, 1.25 OD x 1.01 ID x .731	1
18	01002885	HHCS, M10 x 1.5, 30mm	1	36	02003001	Throttle Cable, 42.0	1
19	01004004	Control Throttle Knob	1				

29HP Electrical Assembly Kawasaki- Figure 12 and Parts List

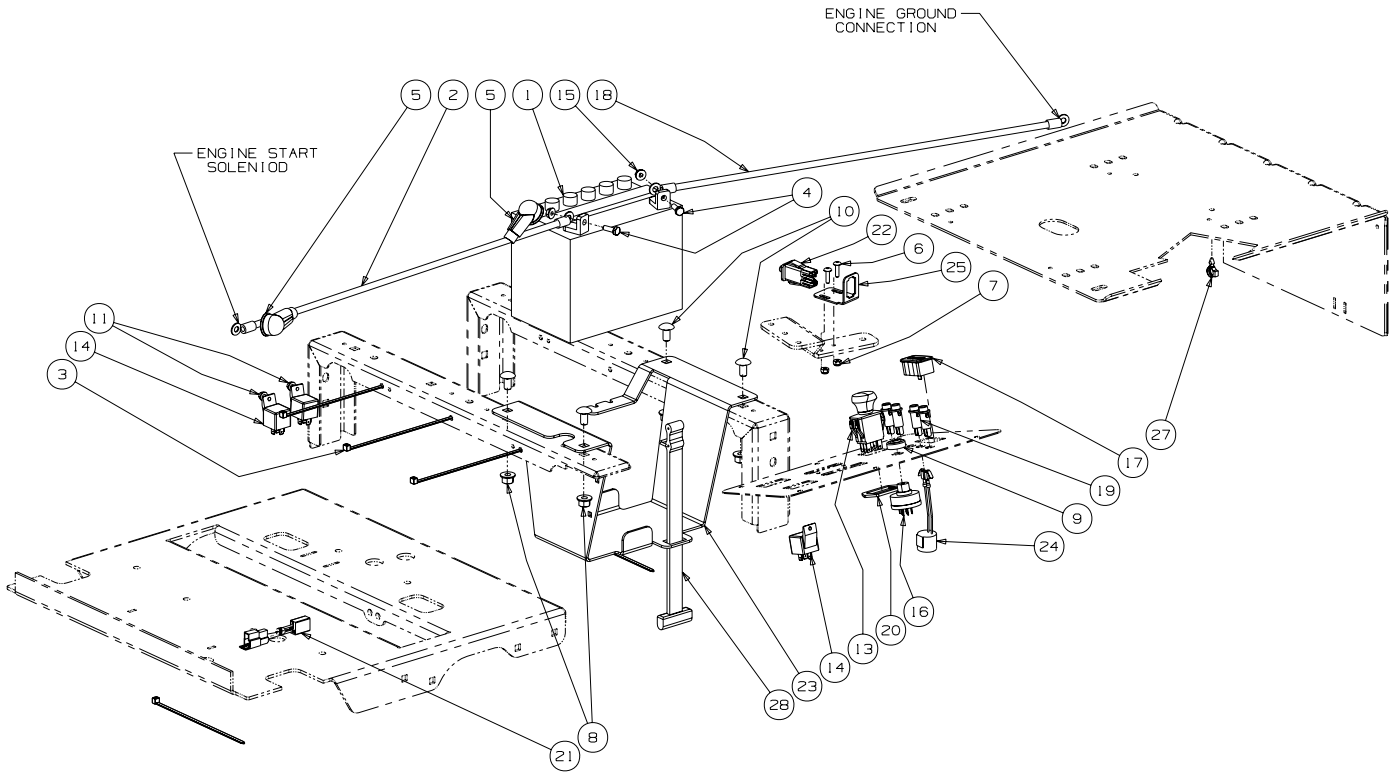

GD: 02002950-02/20/07

Fasten relay (01002251) with self-tapping screw (01000443) on LH control panel shown in Fig. 2.

Ref. No.	Part No.	Description	Qty.	Ref. No.	Part No.	Description	Qty.
1	00012032	Battery, 12V 225CCA 30 Min	1	15	01002766	Hex Flange Lock Nut, 1/4-20	2
2	00012289	Cable, Battery, Red, 36"	1	16	01003581	Switch, Ignition, 6 Pin	1
3	00012470	Tie, Cable, 3/16 x .05 x 7.4"	5	17	01005389	Meter, Hour	1
4	00013131	Screw, Hex, Cap, 1/4-20 x .75	2	18	01009623	Cable, Battery Black, 34"	1
5	00013258	Boot, 1" OD Rubber Battery-PST, Red	2	19	01009816	Light Indicator, 12V	4
6	00014602	Round Hd. Machine Screw, 10-32 x 3/4	2	20	01009905	Bracket, PTO Switch Retainer	1
7	00014608	Nut, Lock, Nylon Insert, #10-32	2	21	01009921	Adaptor	1
8	00022560	Flange Lock, Hex Nut, 3/8-16	4	22	02000024	Neutral Switch	1
9	00032097	Nut, W/Cap, 5/8-32 Ignition	1	23	02002552	Battery Bracket	1
10	01000372	Carriage Bolt, 3/8-16 x .75 Long	4	24	02002588	Alarm, High Temp	1
11	01000628	Self Tapping Screw, 1/4-20 x .50	2	25	02002592	Control/Brake Panel Switch	1
12	01001811	Hourmeter, Harness (not shown)	1	26	02002951	Harness Assembly (not shown)	1
13	01002111	Switch, Electric, PTO	1	27	02003038	Electrical Conduit Clip, 3/8	1
14	01002251	Relay, 12V 40A	3	28	723-3064	Strap, Battery	1

Lift Assembly - Figure 13

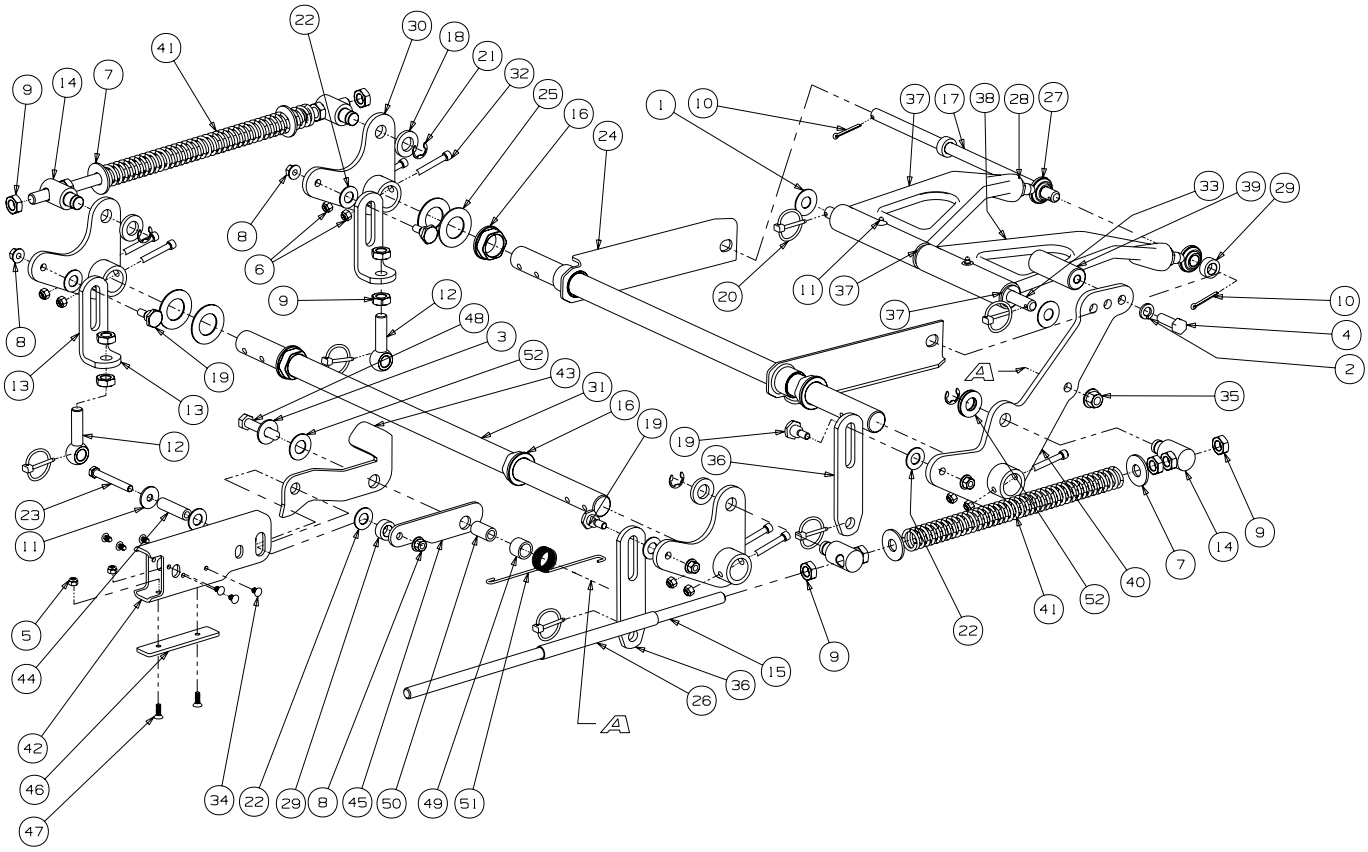

GD: 02002660-03/16/07

Lift Assembly - Parts List for Figure 13

Ref. No.	Part No.	Description	Qty.
1	00002766	Washer, 1.5 x .655 x .055	2
2	00010734	Lock Washer, 1/2	1
3	00011459	Flat Washer, 1/2	1
4	00011951	Hex Cap Screw, 1/2-13 x 1.50	1
5	00012152	Lock Nut w/Nylon Insert	2
6	00012165	Nut, 5/16-18, Nylock	8
7	00013432	Flat Washer, 5/8	4
8	00022560	Hex Nut, Flange Lock, 3/8-16	5
9	00035632	Jam Nut, 5/8-11	14
10	00060018	Cotter Pin, 3/16 x 1-1	2
11	01000872	Flat Washer, 1.25 x .411 x .100	1
12	01001744	Eye Bolt, 5/8ID	2
13	01007255	Eye Bolt Mount Link, 5/8 ID	2
14	01001855	Ferule Lift	4
15	01001857	Lift Connector Rod	2
16	01001930	Hex Flange Bearing, 1.25 ID	4
17	01002586	Front Lift Link, Rod Mount	1
18	01003123	Spacer, .812 ID x .268 Lg.	3
19	01003535	Shoulder Screw, 0.625 OD x .437 Lg.	4
20	01003993	Linch Pin, 3/16 Dia.	6
21	01003994	E Clip, 3/4 Dia.	4
22	01004003	Nylon Flat Washer, 5/8	6
23	01004127	HHCS, 3/8-16, 3.00	1
24	01005569	Front Frame Strut Assembly	2
25	01006408	Flat Washer, 1.25 ID	4
26	01006823	Hose, 5/8 ID 13/16 OD, 8" LG	2
27	01007487	Rod End, Male	2
28	01007526	Jam Nut, 5/8-18	2
29	01007527	Spacer, .630 ID x 1.06 OD x .440	3
30	01008206	Bellecrank Weldment Assembly	3
31	01007681	Deck Lift Shaft	2
32	01007962	Socket Head CapScrew, 5/16-18 x 2	8
33	01008453	Lift Link Rod	1
34	01008801	Rivet, 1/4 x 5/8	6
35	01010119	Nut, 1/2-13, FlangeLock	1
36	02003566	Deck Link	2
37	02002708	Bearing Lift Brace Assembly, Left Hand includes:	1
	00060078	Grease Fitting	1
	02002384	Bearing	2
38	02002709	Bearing Lift Brace Assembly, Right Hand includes:	1
	00060078	Grease Fitting	1
	02002384	Bearing	2
39	02002596	Deck Lift Foot Pedal	1
40	02002595	Deck Lift Foot Pedal Weldment	1
41	02002959	Lift Compression Spring	2
42	02003050	Lift Tube, 3.0 x 1.5	1
43	02003042	Lift Link Bracket	1
44	02003043	Spacer, .375 ID x .625 OD x 1.53	1
45	02003511	Yoke Plate	1
46	02003749	Lift Wear Plate	1
47	02003505	Flat Head Cap Screw, 1/4-20 x .75	2
48	02003585	HHCS, 1/2-13 x 2.50	1
49	02003586	Spacer, .76 ID x 1.0 OD x .75	1
50	02003587	Spacer, .50 ID x .75 OD x 1.313	1
51	02003588	Torsion Spring, .120 Wire x 1.32 OD	1
52	736-0188	Washer, .76 x 1.49 x .06	3

Decal Map

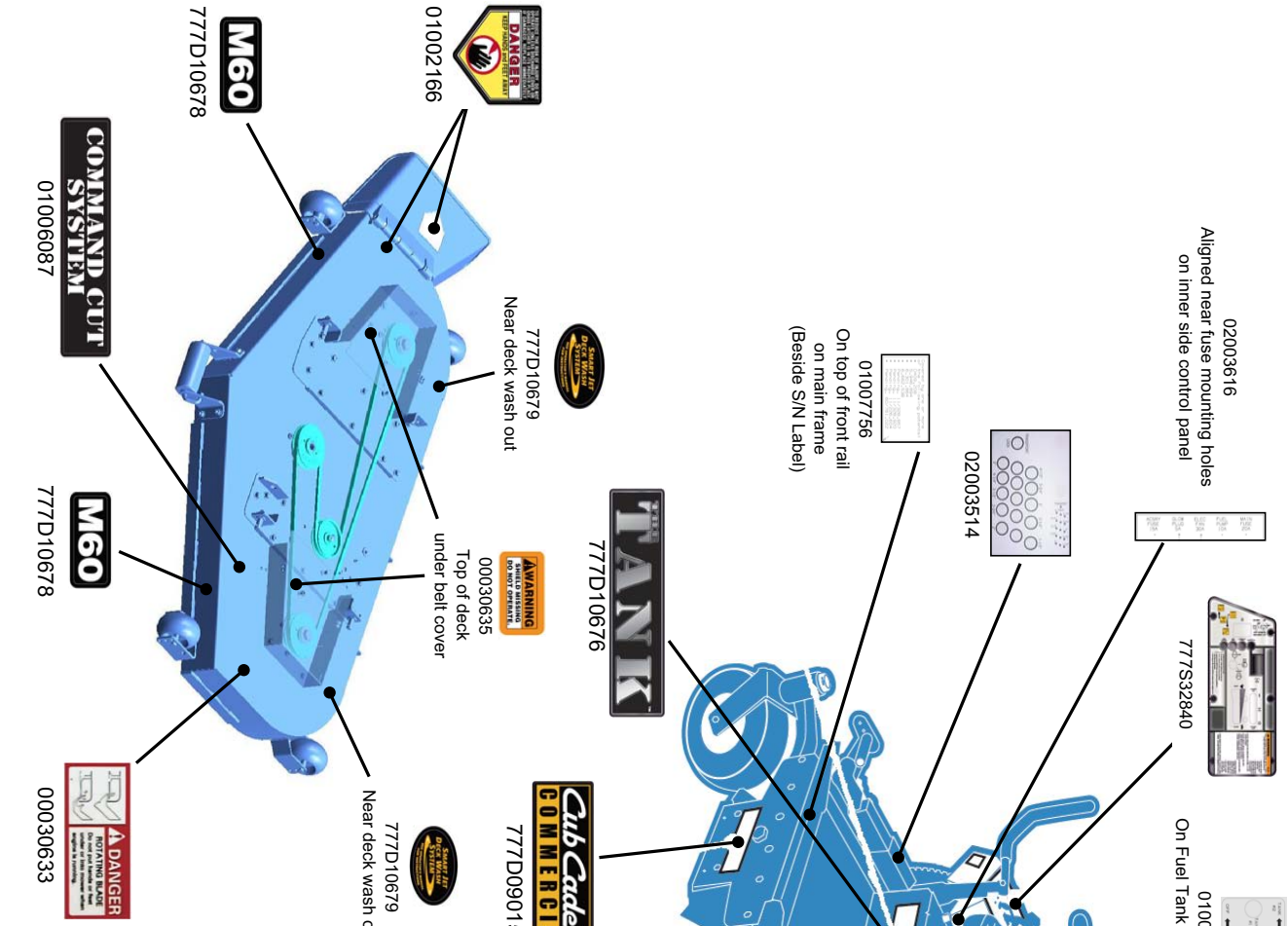
02003616
Aligned near fuse mounting holes on inner side control panel
02003514
01007756
On top of front rail on main frame (Beside S/N Label)
777S32840
01009824
On Fuel Tank Selector Valve
777D10676
Centered on rear bumper
02002693
Centered top of Tow Hitch
02003652
On top of seat plate (near lock pin)
777S32797
777D09281
Both sides of unit
02002041
On top of Hydraulic Tank
02003676
On bottom of Foot Platform
777D09015
777D10676
01002166
777D10679
Near deck wash out
00030635
Top of deck under belt cover
777D10678
777D10678
01006087
777D10679
Near deck wash out
00030633

This Page Intentionally Left Blank



Cub Cadet Commercial
P.O. Box 368023
Cleveland, OH 44136

Form No. 02003433 Rev. 07-3 04/25/2007