Cub Cadet
COMMERCIAL

Hydrostatic Zero-Turn Commercial Riding Mower

Professional Turf Equipment

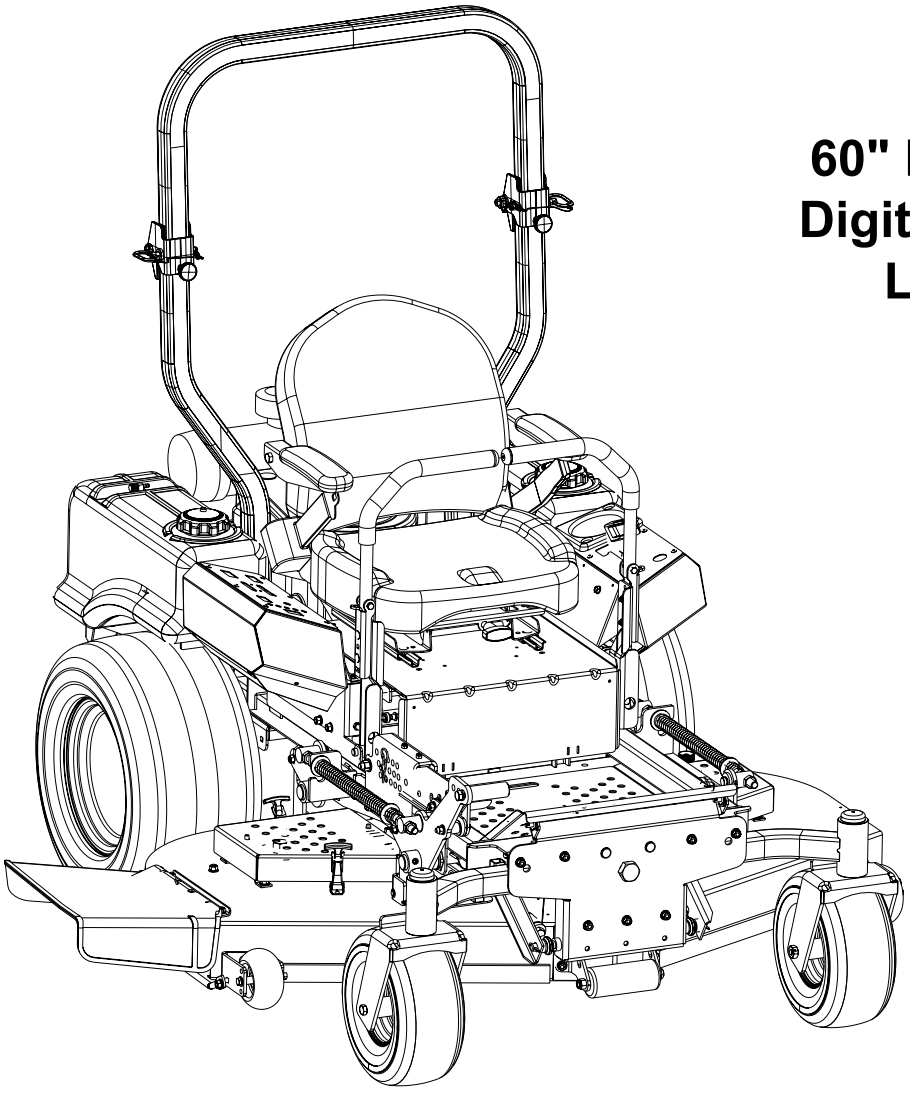

60" Fabricated Deck
Digital Fuel Injection,
Liquid Cooled

ILLUSTRATED PARTS LIST

TABLE OF CONTENTS

Frame Assembly 3
Brake Assembly . . . . . 4 and 5
60" Fabricated Cutter Deck . . . . . 6 and 7
60" Spindle Assembly . . . . . 8 and 9
Fuel Tank Assembly 10
Wheel Assembly 11
Front Caster Assembly 12
Seat/Floor Panel Assembly 13
Hydro Hose and Pump Assembly . . . . . 14 and 15
Control Assembly . . . . . 16 and 17
29 HP Kawasaki Engine Assembly 18
29 HP Electrical Assembly Kawasaki 19
Lift Assembly . . . . . 20 and 21
FD791D 29HP Engine Breakdown 22-34
Right and Left Hand Wheel Motor Breakdown . . . . . 35 and 36
Left Hand BDP-12 Hydraulic Pump Breakdown . . . . 37 and 38
Right Hand BDP-12 Hydraulic Pump Breakdown . . . 39 and 40
Decal Map 41

MODELS LISTED IN THIS MANUAL

29HP Tank,
53AJ8CT6050

Frame Assembly- Figure 1 and Parts List

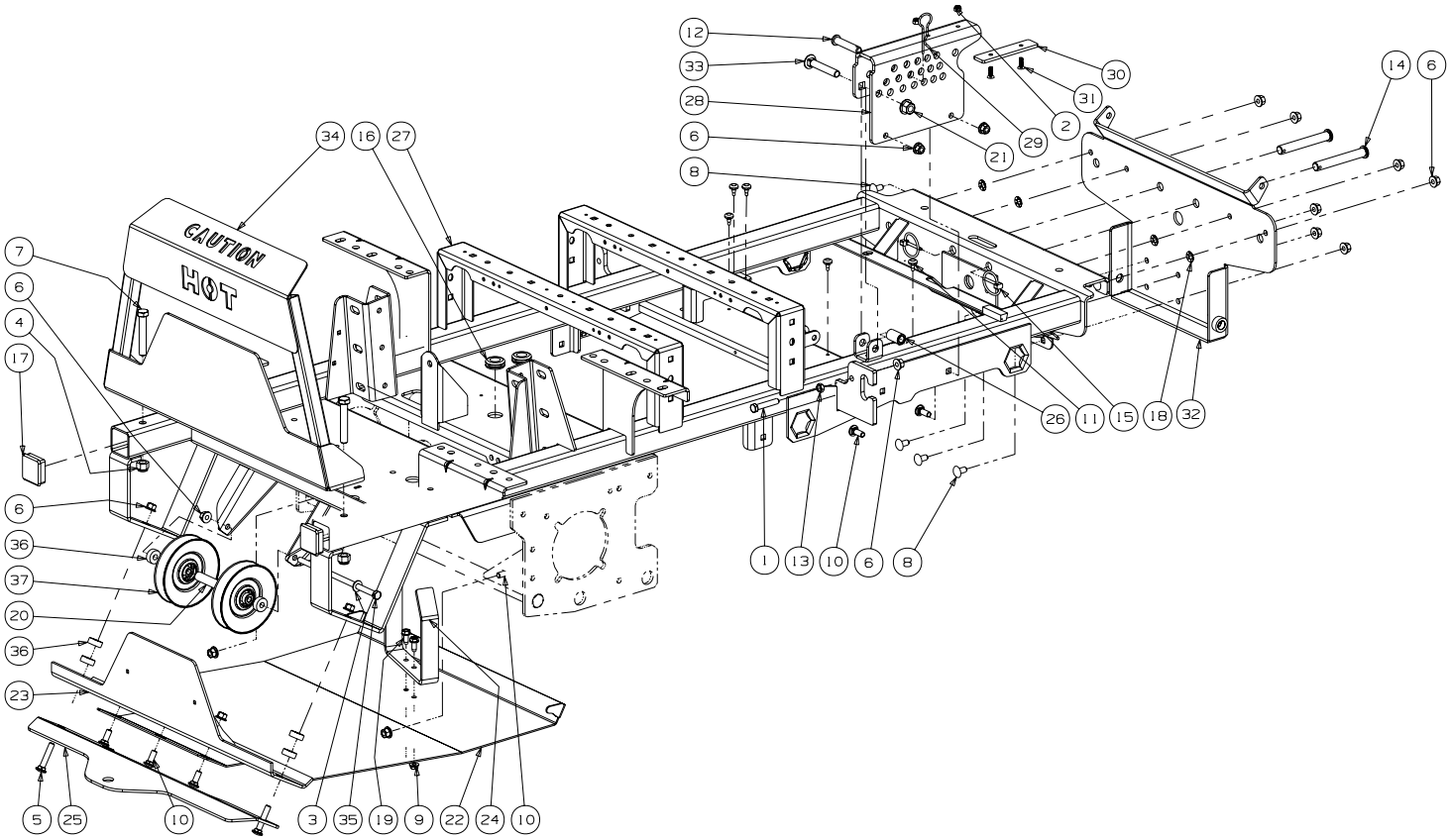

GD: 02005315-10/18/07

Ref. No.	Part No.	Description	Qty.	Ref. No.	Part No.	Description	Qty.
1	01005810	Hex Cap Screw 3/8-16 x 2.00	1	20	01009604	Spacer, .385 ID x .625 OD x 4.89	1
2	00012152	Lock Nut w/Nylon Insert	2	21	01010119	Nut, 1/2-13, Flangelock	1
3	00012158	Flat Washer, 3/8	1	22	02004036	Skid Plate	1
4	00012428	Lock Nut, Nylon Insert, 1/2-13	2	23	02002244	Guard Bracket	1
5	00014270	Carriage Bolt, 3/8-16 x 2.00	2	24	02004021	Belt Guide	1
6	00022560	Hex Nut, 3/8-16 Flange Lock	18	25	02002535	Hitch	1
7	00030046	Hex Head Cap Screw, 1/2-13 x 3.00	2	26	02002655	Spacer, .51 ID x .75 OD x 1.40	1
8	01000372	Carriage Bolt, 3/8-16 x .75 Long	7	27	02002948	Frame Assembly	1
9	01000635	Nut, 5/16-18, Hex Flange Lock	2	28	02005101	Lift Index Bracket	1
10	01000643	Carriage Bolt, 3/8-16 x 1.0	7	29	02003074	HitchPin, .120 Dia. x 3.0	1
11	01001170	Rubber Bumper, .62 OD x .22 Thick	6	30	02003749	Wear Plate, 1.125 x 5.00	1
12	01001776	Clevis Pin, .500 Dia. x 2.50 Lg.	1	31	02003505	Flat Head Cap Screw, 1/4-20 x .75	2
13	01002511	Nut, 3/8-16, Jam	1	32	02003526	Bracket Assembly, Frame, Front	1
14	01003282	Clevis Pin, .625 Dia x 4.375 Long	2	33	02003563	Carriage Bolt, 1/2-13 x 3.00	1
15	01003993	Linch Pin, 3/16 Dia.	2	34	02003661	Muffler Guard Assembly	1
16	01004040	Grommet, .75 ID	2	35	710-3248	Hex Head Cap Screw, 3/8-16 x 8.50	1
17	01005160	Plug, Square Tube	2	36	750-3119	Spacer, .406 ID x 1.00 OD x .380	6
18	01008225	Push Retainer, 3/8	4	37	756-3045	Idler Pulley, 5.06 Dia.	2
19	01008620	Self Tapping Screw 5/16-18 x .750	2				

Brake Assembly - Figure 2

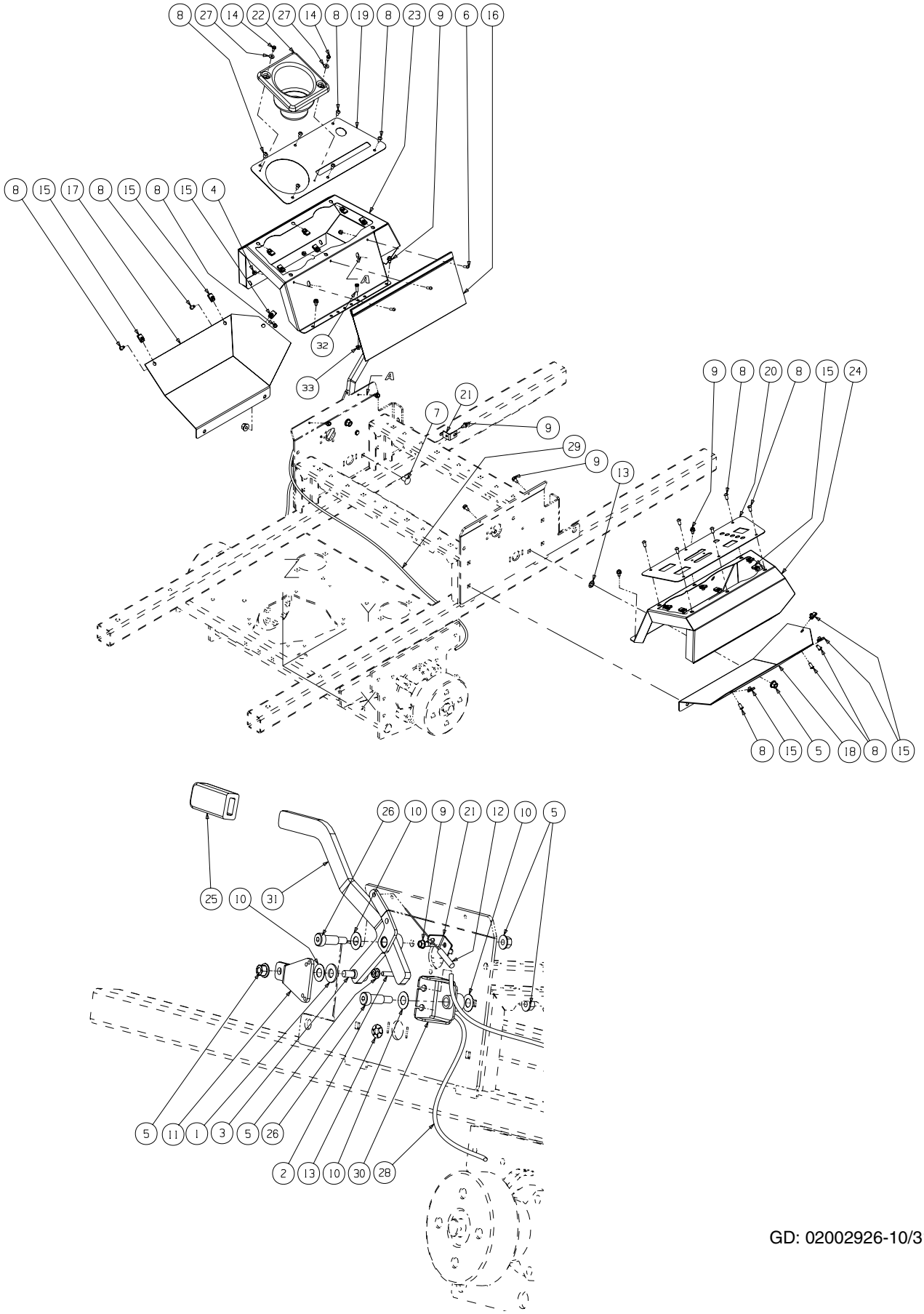

GD: 02002926-10/31/07

Brake Assembly - Parts List for Figure 2

Ref. No.	Part No.	Description	Qty.
1	00012577	Washer, 1/2 Zinc	1
2	01000643	Carriage Bolt, 3/8-16, 1.00	1
3	00011450	Shoulder Bolt, 1/2 x 1/2	1
4	00014608	Lock Nut, Nylon Insert, 10-32	3
5	00022560	Flange Lock Hex Nut, 3/8-16	6
6	00030906	Phillips Head Machine Screw, 10-32 x 5/8	3
7	01000372	Carriage Bolt, 3/8-16 x .75	2
8	01000443	Screw Button Head, 1/4-20 x .5	18
9	01000628	Screw, TT, 1/4-20, 0.5, Hex Index Washer	10
10	01000930	Washer, .508 ID x 1.0 OD x .020	4
11	02003841	Centering Bracket	1
12	01008198	Left Hand Brake Cable	1
13	01008225	Push Retainer, 3/8	2
14	01008531	Screw, #10-32 x 0.500	2
15	01008539	U-Nut, 1/4-20	18
16	02000362	Bag, Debris Storage	1
17	02002785	Lower Panel, LH	1
18	02002786	Lower Panel, RH	1
19	02002806	Control Panel Cover, LH	1
20	02002852	Control Panel Cover, RH	1
21	02002864	Brake Cable Mounting Bracket	2
22	02002874	Cup Holder	1
23	02002969	Control Panel, LH	1
24	02002970	Control Panel, RH	1
25	02003010	Parking Brake Grip	1
26	02003603	Shoulder Bolt, 1/2 x 1.00, 3/8-16	2
27	02003725	Washer, 3/16	2
28	02003770	Brake Cable, LH	1
29	02003774	Brake Cable, RH	1
30	02003776	Brake Cable Bracket	1
31	02005151	Brake Lever	1
32	00013131	Screw, Hex, Cap, 1/4-20 x .75	1
33	01002766	Lock Nut, 1/4-20	1

60" Fabricated Cutter Deck - Figure 3

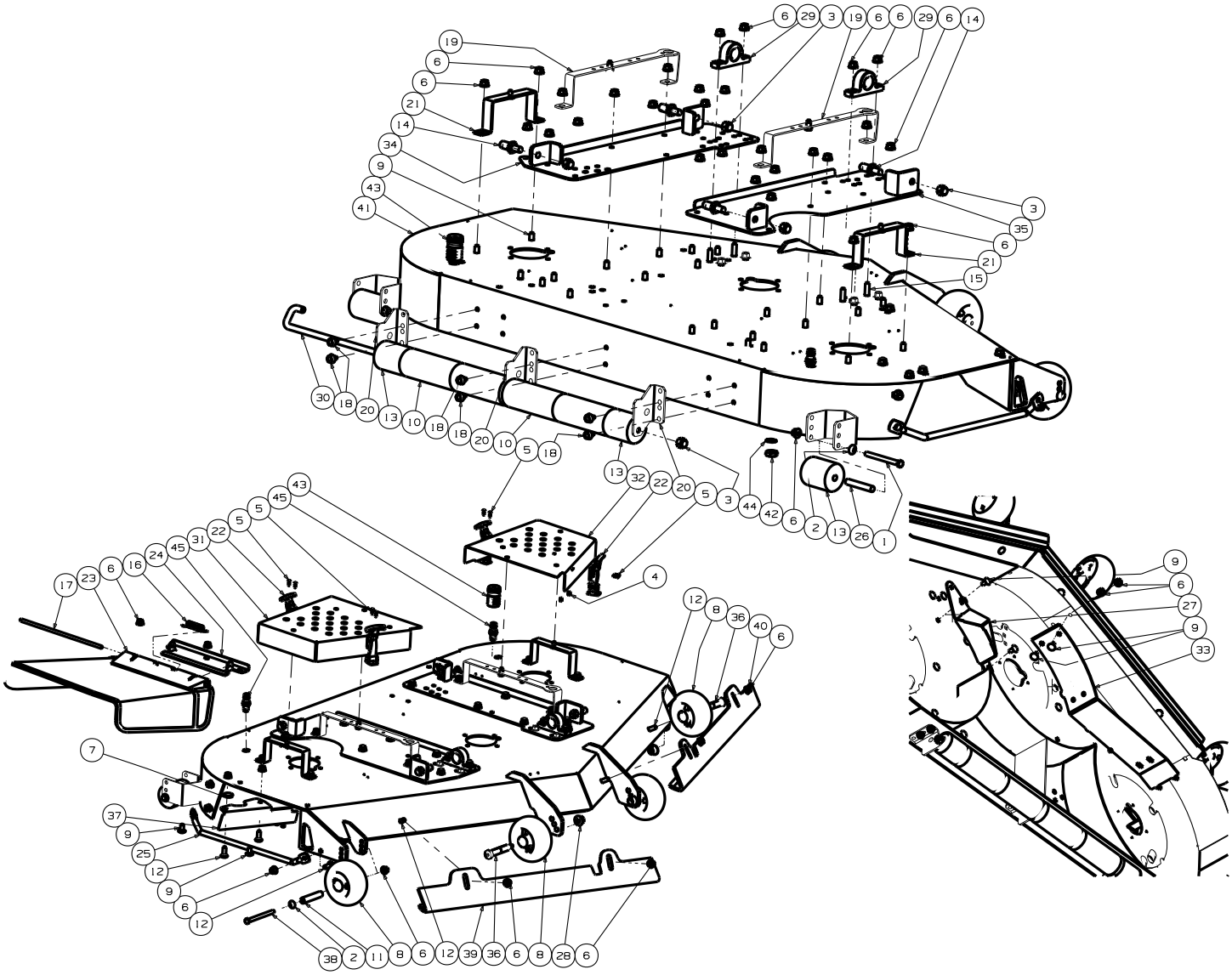

GD: 02005280-10/31/07

60" Fabricated Cutter Deck - Parts List for Figure 3

Ref. No.	Part No.	Description	Qty.
1	00011925	Hex Cap Screw, 3/8-16, 3.75	2
2	00012158	Flat Washer, 3/8	3
3	00012428	Lock Nut, Nylon Insert, 1/2-13	5
4	00014608	Lock Nut, Nylon Insert, 10-32	16
5	00017778	Phillips Head Screw, 10-32	16
6	00022560	Flange Lock Hex Nut, 3/8-16	49
7	00083192	Idler Washer	1
8	01000343	Complete Wheel, 5.00 Dia.	4
9	01000372	Carriage Bolt, 3/8-16 x .75 Lg.	35
10	01000385	Front Roller	4
11	01000398	Wheel Spacer	1
12	01000643	Carriage Bolt, 3/8-16 x 1	7
13	01001169	Grass Catcher Roller	4
14	01001745	Pin, 5/8 Dia. x 1.2 Lg.	4
15	01002010	Carriage Screw, 3/8-16 x 1.25	4
16	01003253	Torsion Spring, 0.4ID x 2.16Lg	1
17	01003254	Chute Deflector Rod	1
18	01004304	Hex Index Washer Screw, 3/8-16, .5	8
19	01004684	Belt Cover Support	2
20	01004707	Deck Roller Mount Bracket	3
21	01005438	Outer Belt Cover Support Assembly	2
22	01005869	T-Handle Latch Draw	4
23	01006693	Chute Deflector	1
24	01006748	Chute Deflector Bracket	1
25	01008644	Finger Guard	1
26	01009808	Spacer, .385 x .50 x 3.045	2
27	01009842	Chute Descharge Baffle	1
28	01010119	Nut, 1/2-13, Flangelock	3
29	02000109	Pillow Block	2
30	02002800	J-Hook w/ Threaded Roller	1
31	02002826	Right Hand Deck Belt Cover	1
32	02002827	Left Hand Deck Belt Cover	1
33	02004153	Adjustment Baffle	1
34	02004791	Left Hand Mount Deck Bracket Assembly	1
35	02004792	Right Hand Deck Bracket Assembly	1
36	02004833	Shoulder Bolt, .625 x 3.00 x 3/8-16	3
37	02005070	Chute Baffle	1
38	02005197	Hex Cap Screw, 3/8-16 x 4.25	1
39	02005200	Right Hand Front Adjustment Skirt	1
40	02005201	Left Hand Front Adjustment Skirt	1
41	02005282	60 Deck Assembly	1
42	712-0641	Hex Nut, M16-1.5	2
43	721-04041	Water Nozzle Adaptor	1
44	736-0760	Lock Washer, 17 x 23.8 x 1.95	2
45	737-04003C	Deck Water Nozzle	2

60" Fabricated Deck Spindle Assembly - Figure 4

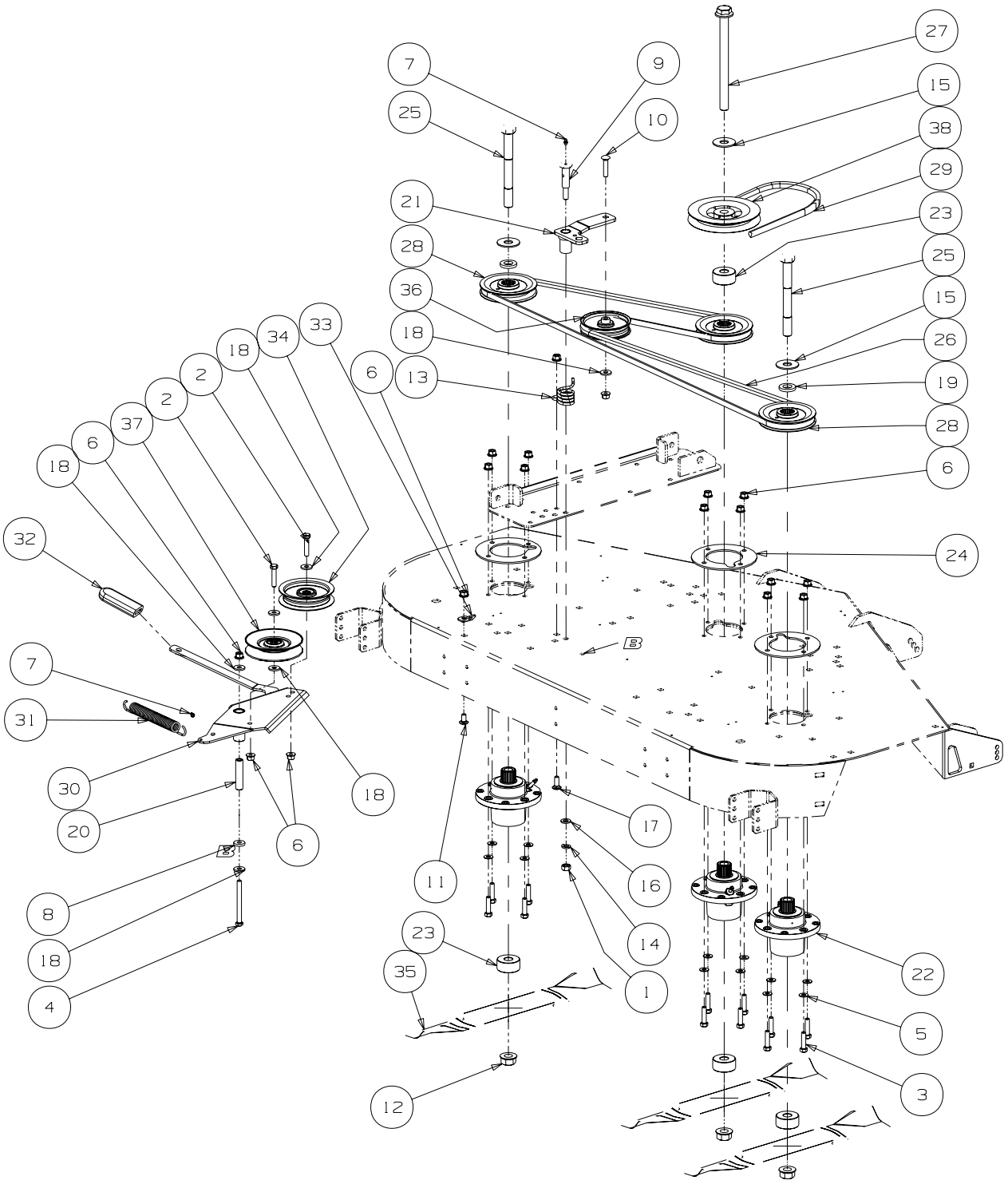

GD: 02005246-10/19/07

60" Fabricated Deck Spindle Assembly - Parts List for Figure 4

Ref. No.	Part No.	Description	Qty.
1	00005763	Hex Nut, 7/16-14	1
2	00008495	Hex Cap Screw, 3/8-16 x 1-3/4	2
3	00011438	Hex Cap Screw, 3/8-16 x 1-1/2	12
4	00011925	Hex Cap Screw, 3/8-16, 4.00	1
5	00012158	Flat Washer, 3/8	12
6	00022560	Flange Lock Hex Nut, 3/8-16	18
7	00060078	Grease Fitting, 1/4-28 x 3/16	2
8	00083192	Idler Washer	1
9	01000302	Shoulder Screw, 7/16-14	1
10	01000364	Hex Carriage Screw, 3/8-16, 1.75	1
11	01000372	Carriage Bolt, 3/8-16 x .75 Lg.	1
12	01000380	Flange Hex Nut, 3/4-16	3
13	01000387	Torsion Idler Spring	1
14	01000389	Lock Washer, 7/16	1
15	01000392	Flat Washer, .781 ID 2.00 OD, .105	3
16	01000393	Flat Washer, .469 ID, .875 OD, .105	1
17	01000643	Carriage Bolt, 3/8-16 x 1	1
18	01000723	Flat Washer, .406 ID, 1.0 OD, .105	6
19	01003123	Spacer .812 ID x .268 LG	2
20	01003245	Spacer, .39 ID x .625 OD x 2.75	1
21	01005737	Idler Arm Assembly, Deck Spindle includes:	1
	01000308	Bearing	2
22	01003532	Aluminum Spindle Assembly	3
23	01004415	Spacer, .760 ID x 2.00 OD x 1.1	4
24	01004478	Aluminum Spindle Support Plate	3
25	01005213	Hex Cap Screw, 3/4-16, 7.00	2
26	01005376	V-Belt, A Section x 122.3	1
27	01005388	Hex Cap Screw, 3/4-16, 9.00	1
28	01005616	V-Pulley, 5.00 OD	3
29	01009583	V-Belt, B Section x 147.4	1
30	02003489	Idler Arm Assembly includes:	1
	01000308	Bearing	2
31	02003712	Extension Spring, .94 x OD x 7.57	1
32	02003740	Grip, 1.0 x 3.2 x .25	1
33	02004195	Tension Spring Bracket	1
34	02004447	Idler Pulley, 4.06 OD	1
35	02005019	Hi-Lift Blade, 21.0, 0.756 ID	3
36	02005077	Flat Pulley with Flanges	1
37	02005079	Idler Pulley, 5.06 OD	1
38	02005097	V-Pulley, 6.38 OD x .760 ID	1

Fuel Tank Assembly - Figure 5 and Parts List

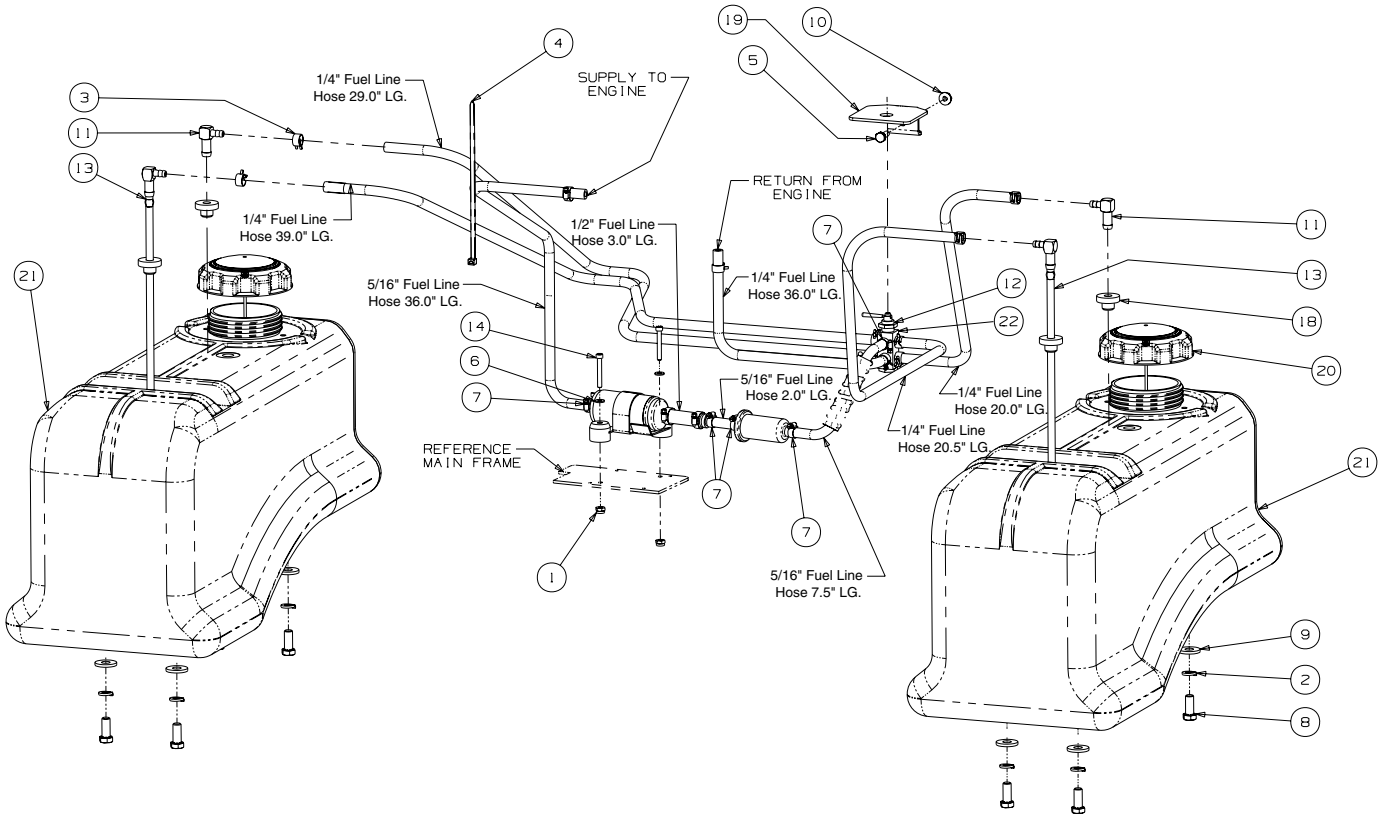

GD: 02003650-10/18/07

Ref. No.	Part No.	Description	Qty.	Ref. No.	Part No.	Description	Qty.
1	00006194	Nut, 10-24, Nylon Insert	2	12	01009812	Shut Off Fuel Valve	1
2	00012157	Lock Washer, 3/8	8	13	01009821	Fuel Fitting, Pickup	2
3	00012235	Clamp, Union	10	14	01009831	Socket Head Screw, 10-24 x 1.25	2
4	00012470	Cable Tie	6	15	--	Hose, 1/4" Fuel Line (in inches)	144.5
5	00013131	Hex Cap Screw, 1/4-20 x 3/4	1	16	--	Hose, .31 ID x .56 OD Fuel Line (in inches)	45.5
6	00016771	Washer, 3/16	2	17	--	Fuel Hose, .50 ID x .75 OD (in inches)	3
7	01000215	Hose Clamp	8	18	02002253	Fuel Tank Grommet	4
8	01000368	Hex, Cap Screw, 3/8-16, .88	8	19	02003032	Fuel Valve Mounting Bracket	1
9	01000723	Flat Washer, .406 ID, 1.0 OD, .105	8	20	751-3124D	Fuel Cap 3.5, Tethered	2
10	01002766	Hex Flange Lock Nut, 1/4-20	1	21	02003843	Fuel Tank	2
11	01009809	Fuel Fitting, Return	2	22	01004340	Lock Washer	1

Wheel Assembly - Figure 6 and Parts List

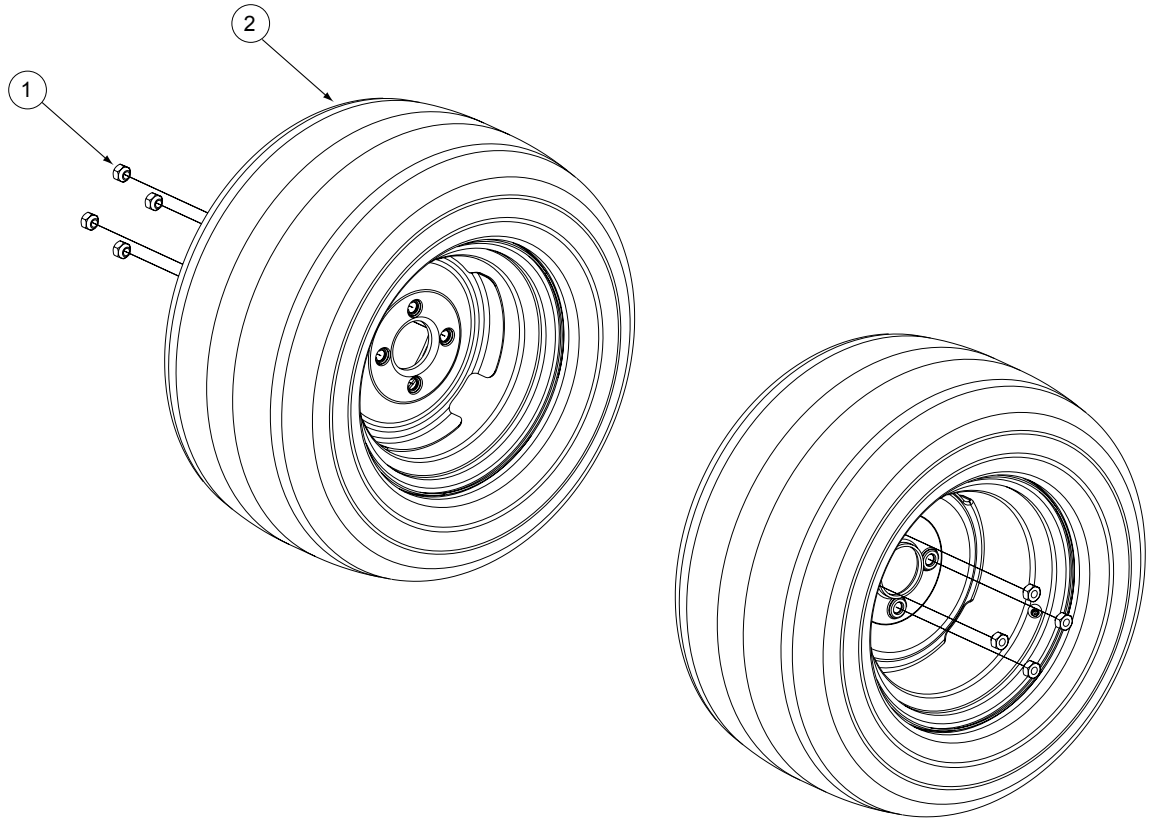

GD: 02002669-10/04/06

Ref. No.	Part No.	Description	Qty.
1	00012187	Lug Nut, 1/2-20	8
2	02002668	Wheel Assembly, 24 x 12.00-12, Beige	2
		Includes:	
	00073975	Tire, 24 x 12.00-12,Turf Master	
		Rim, 12 Dia x 8.50 width	
OPTIONAL TIRES			
	01002182	Wheel Assembly, 24 x 12.00-12, Turf Saver	
	01004473	Tire, 24 x 12.00-12, Turf Saver	

Front Caster Assembly - Figure 7 and Parts List

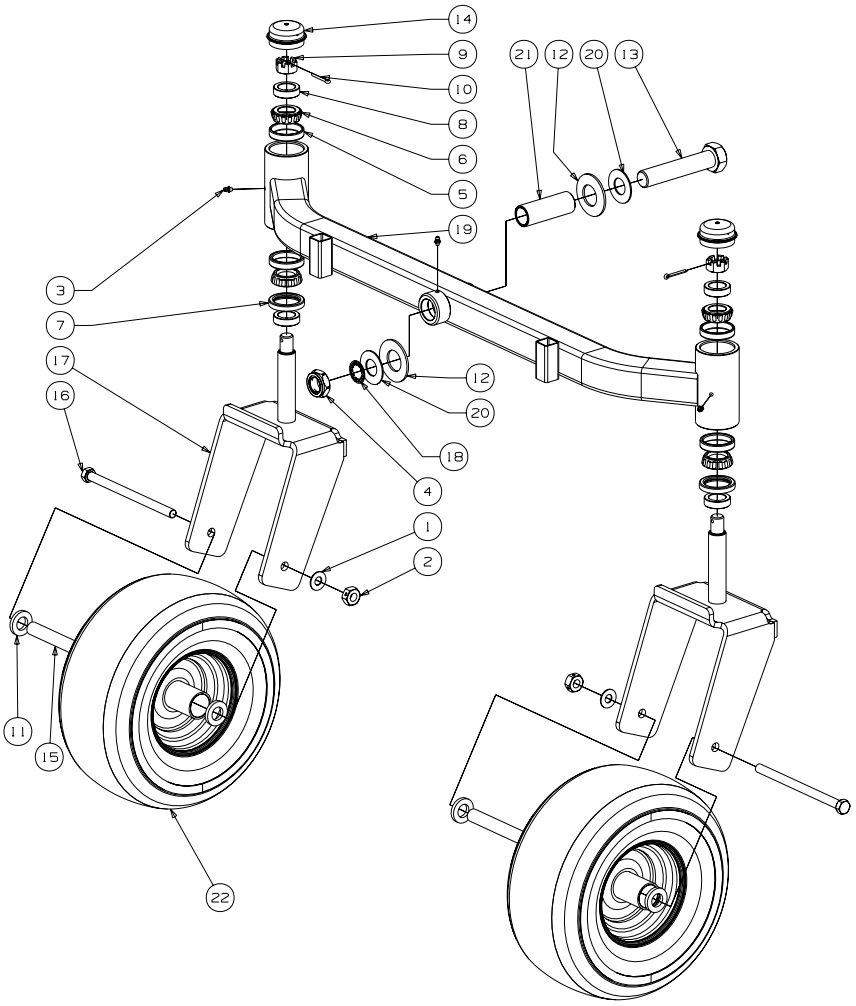

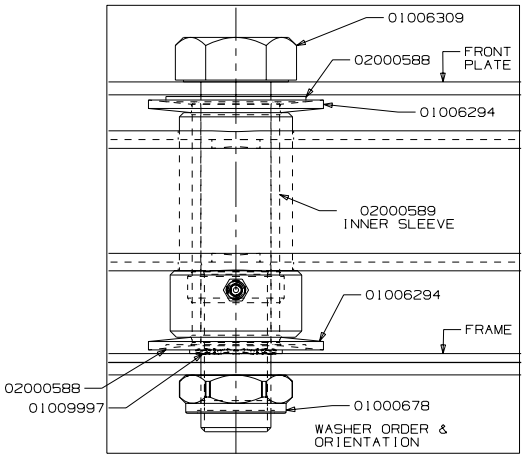

GD: 02005096-09/06/07

Ref. No.	Part No.	Description	Qty.	Ref. No.	Part No.	Description	Qty.
1	00012577	Washer, 1/2 x 1 Shim	2	14	01006347	Grease Cap, 1.986 OD	2
2	00023287	Nut, 1/2-20, Center Lock	2	15	01006912	Wheel Spacer	2
3	00060078	Grease Fitting, 1/4-28 x 3/16	3	16	01006961	HHCS, 1/2-20, 7.50	2
4	01000678	Nut, Jam, 1.0-14, Insert Lock	1	17	01007342	Yoke, Caster Wheel	2
5	01002620	Cup Bearing	4	18	01009997	Retainer Extension, Self Locking	1
6	01002621	Bearing Cone	4	19	02004876	Front Axle Assembly	1
7	01002622	Seal	2	20	02000588	Flat Washer, 1.00 ID	2
8	01002624	Ring Seal	4	21	02000589	Spacer, 1.005 ID x 1.25 OD x 3.6	1
9	01002626	Slotted Nut, 3/4-16	2	22	02002821	Wheel, 13 x 6.50 x 6.0, Beige, includes	2
10	01002627	Cotter Pin, 5/32, 1.25	2		02002108	Tire	1
11	01003123	Spacer, .812 ID x .218LG	4		02002106	Roller Bearings (per tire)	2
12	01006294	Bell Washer, 1.25 ID x 2.5 x .157	2		02002107	Retainer Bushings (per tire)	2
13	01006309	Hex Cap Screw, 1-14 x 5.0	1				

Seat/Floor Panel Assembly- Figure 8 and Parts List

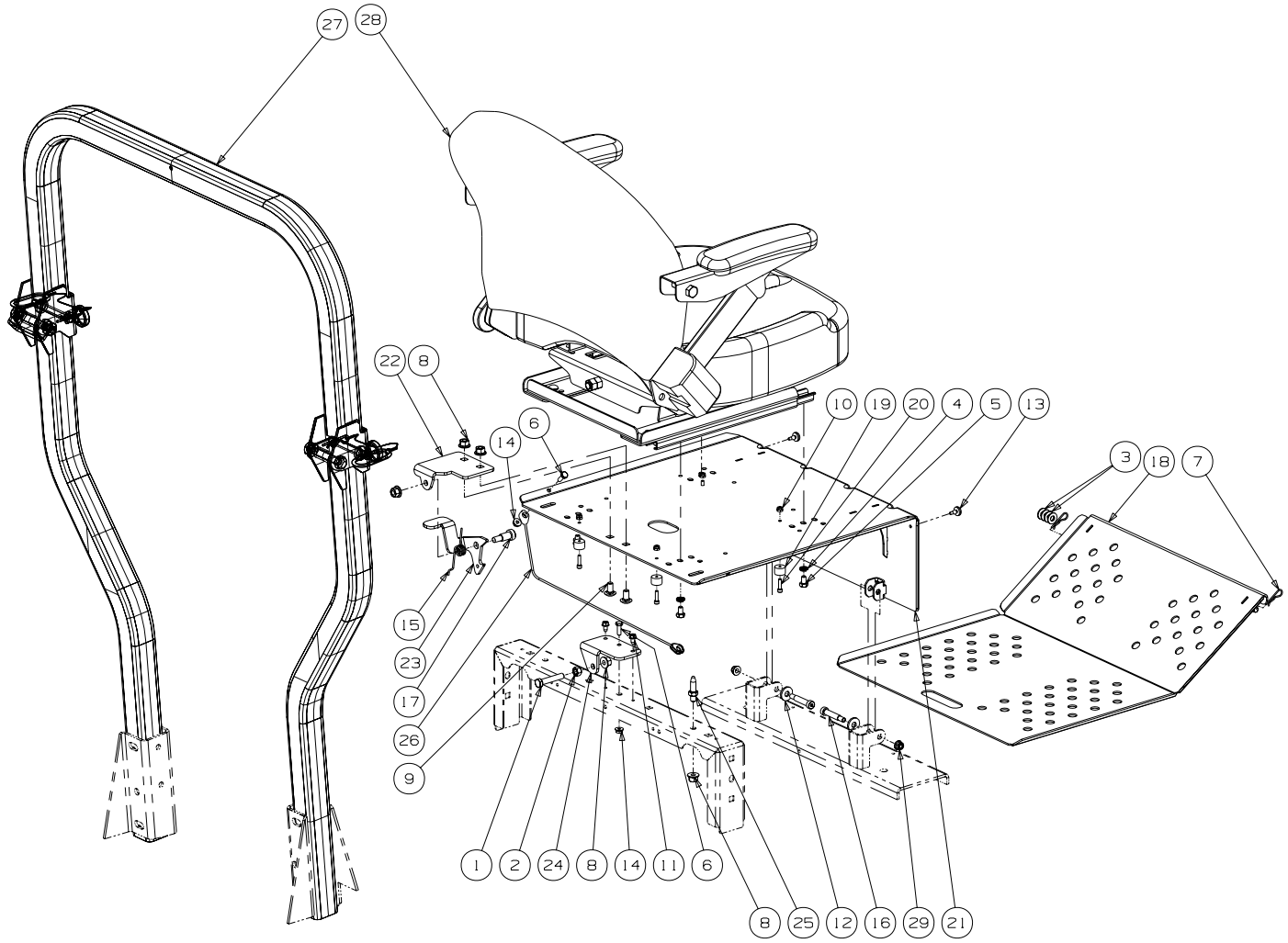

GD: 02005208-09/17/07

Ref. No.	Part No.	Description	Qty.	Ref. No.	Part No.	Description	Qty.
1	00002528	Hex Cap Screw 3/8-16 x 2.00	1	19	02002963	Rubber Stop with Washer	4
2	00006131	Hex Nut, 3/8-16	1	20	02002964	Standard Cap Screw, #10-24 x .75	4
3	00012158	Washer	AR	21	02003404	Seat Plate Assembly	1
4	00012168	Lock Washer, 5/16	4	22	02003730	Seat Latch Bracket	1
5	00012178	Hex Cap Screw, 5/16-18 x 1/2	4	23	02003732	Latch Lever Bracket	1
6	00013131	Screw, Hex, Cap, 1/4-20 x .75	2	24	02003738	Latch Bracket	1
7	00021956	Hair Pin, 3/8-1/2	2	25	02003745	Adjustable Stud	1
8	00022560	Flange Lock, Hex Nut, 3/8-16	5	26	02004062	Cable Support	1
9	01000372	Carriage Bolt, 3/8-16 x .75 Long	2	27	02005081	Foldable Rops Assembly includes:	1
10	01000523	Nut, #10-24, Nylon Lock	4			Knob	2
11	01000628	Screw, TT, 1/4-20, 0.5, Hex Index Washer	2		02004324	Pin, Lock	2
12	01000723	Flat Washer, .406 ID, 1.0 OD, .105	2	28	02005209	Seat w/ Seat Belt & Suspension	1
13	01001170	Rubber Bumper, .62 OD x .22 Thick	2		01008364	Armrest Kit	
14	01002766	Lock Nut, 1/4-20	2			Seat Back Cover	
15	01008140	Deck Lift Spring, Left Hand	1			Seat Bottom Cover	
16	01009459	Shoulder Bolt, .375 x 1.50	2		02000767	Seat Switch Assembly	
17	02002091	Shoulder Bolt, 1/2 x 3/4, 3/8-16	1	29	712-04063	Flange Lock Nut, 5/16-18	2
18	02002334	Floor Panel Assembly	1				

Hydro Hose and Pump Assembly- Figure 9

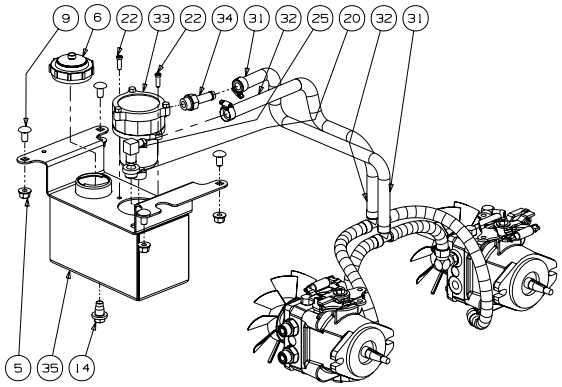

Pilot System

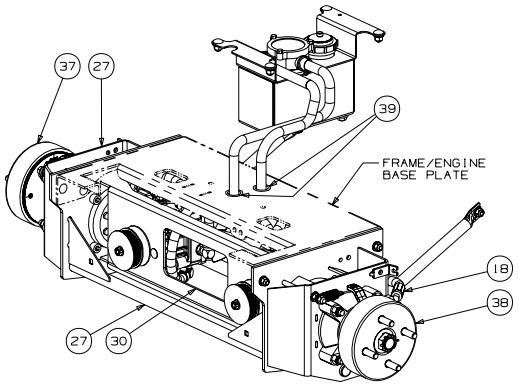

Hydraulic Drive System

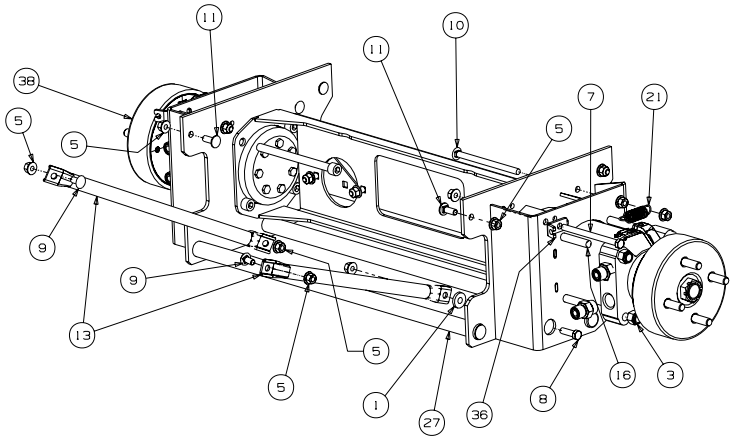

Motor Installation

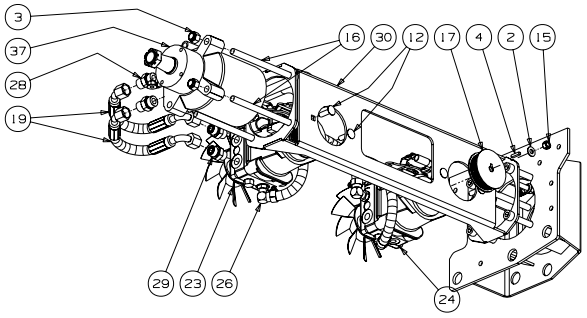

Pump & Motors

GD: 02004879-11/01/07

Hydro Hose and Pump Assembly - Parts List for Figure 9

Ref. No.	Part No.	Description	Qty.
1	00083192	Idler Washer	2
2	00012158	Flat Washer, 3/8	2
3	00012428	Washer lock 3/8 zinc	8
4	00020628	Key, 3/16" x 7/8"	2
5	00022560	Flange Lock Hex Nut, 3/8-16	22
6	00030261	Cap, Hydro Oil Tank	1
7	01002539	Hex Cap Screw, 3/8-16 x 4.50	2
8	01000369	Hex Cap Screw, 3/8 -16 x 1.25	2
9	01000372	Carriage Bolt, 3/8-16 x .75 LG.	6
10	01009906	Carriage Bolt, 3/8-16 x 5.00	2
11	01000643	Carriage Bolt, 3/8-16 x 1	4
12	01002010	Carriage Screw, 3/8-16 x 1.25	4
13	01002593	Strut Frame	2
14	01004192	Oil Pan Drain Plug w/ Seal	1
15	01007309	Hex Nut, 3/8-24	2
16	01008449	Socket Head Capscrew, 1/2-13; 6-1/2	8
17	01009593	Hydro Pulley Pump	2
18	02000066	Hose Assembly, RH	2
19	02000067	Hose Assembly, LH	2
20	02000296	Grommet Fitting, .54 ID x .78 OD	1
21	02000401	Spring Extension, .740 OD x 2.656	2
22	02000841	Socket Low Head Cap Screw, 1/4-20 x 0.75	2
23	02001100	Hydro Pump, BDP-12, LH	1
	01009631	Kit, Fan	1
24	02001101	Hydro Pump, BDP-12, RH	1
	01009631	Kit, Fan	1
25	02001151	Fitting Elbow Spur, 5/8 x 1/2	1
26	02001160	Fitting Elbow, 9/16 x 1/2	4
27	02004648	Hydro Motor Frame Assembly	1
28	02001715	Adaptor Fitting, 8 x 10	4
29	02001975	Adaptor Fitting, 8 x 8	4
30	02002067	Hydro Pump Mounting Bracket	1
31	02002069	Hose Assembly, Pilot includes:	1
	02001175	Tee Fitting	
	02001111	Hose Clamp	
	02002295	Hose Clamp	
	--	Hose, .50 ID x .75 OD	
32	02001107	Hose Assembly, Drain includes:	1
	02001175	Tee Fitting	
	02001111	Hose Clamp	
	02002295	Hose Clamp	
	--	Hose, .50 ID x .75 OD	
33	02002257	Hydraulic In-Tank Filter includes:	1
	02002258	Filter Element	1
34	02002557	Fitting, 3/4 ORB x 1/2 Tube	1
35	02002701	Hydraulic Tank Assembly	1
36	02002899	Rear Cable Mounting Bracket	2
37	02004442	Hydro Motor, Left Hand Assembly w/ Brake & Drum	1
38	02004441	Hydro Motor, Right Hand Assembly w/ Brake & Drum	1
39	01004040	Gromment, .75 ID	2

NOTE: Lubricant, 02002058 Quarts 2.00

Control Assembly- Figure 10

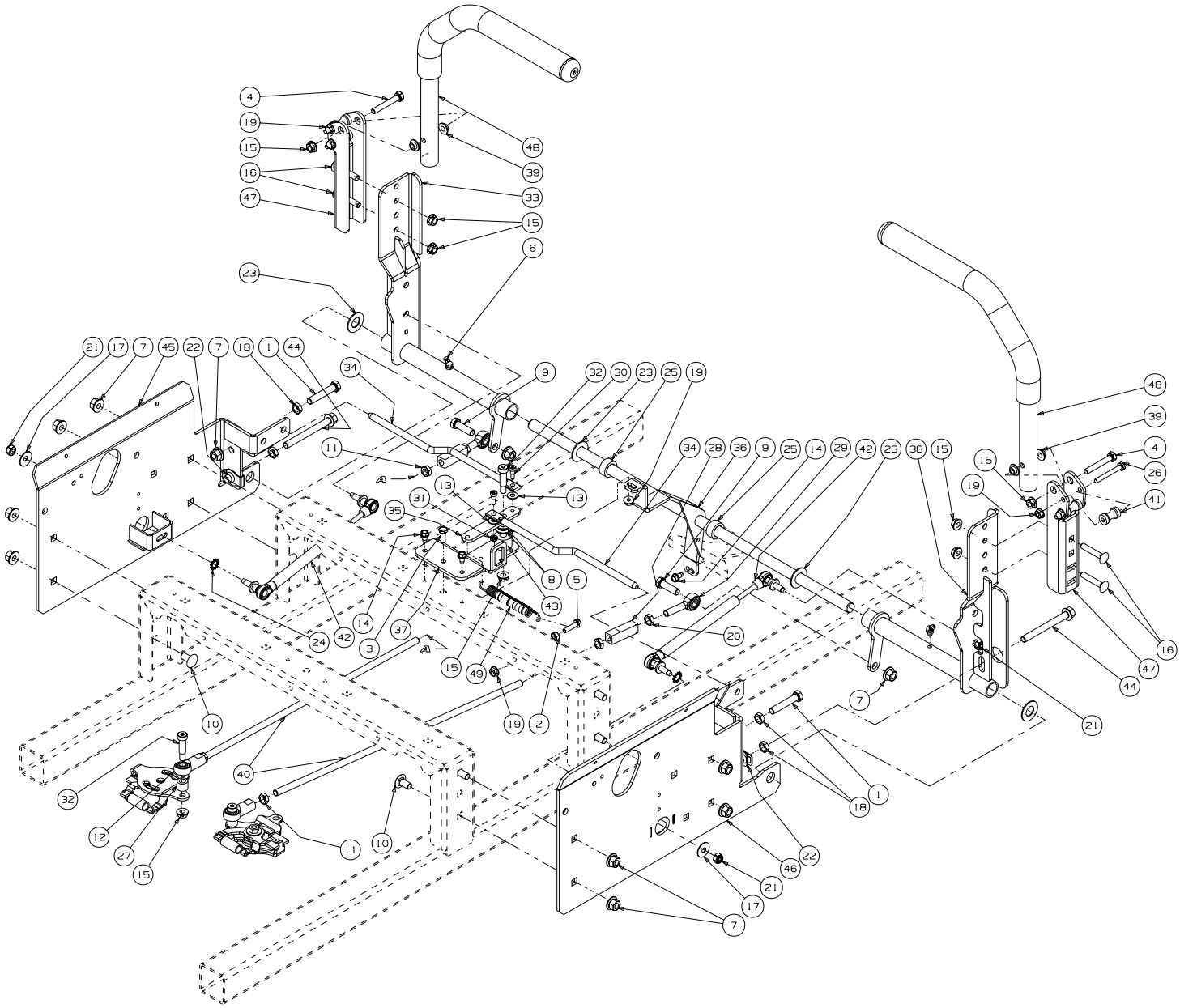

GD: 02005064-10/25/07

Control Assembly - Parts List for Figure 10

Ref. No.	Part No.	Description	Qty.	Ref. No.	Part No.	Description	Qty.
1	00002528	Hex Cap Screw 3/8-16 x 2.00	2	27	01007312	Spacer, .625 OD x .385 ID x 1/2	2
2	00012186	Hex Nut, 1/4-20	1	28	01007734	Turnbuckle	2
3	00013131	Screw, Hex, Cap, 1/4-20 x .75	1	29	01008367	B/Joint, 3/8-24, Left Hand Female	2
4	00013198	Hex Cap Screw, 5/16-18 x 2.00	2	30	01009322	Shoulder Bolt, 1/4 x 1/4	2
5	00013416	HHCS, 1/4-20 x 1.00	1	31	01009377	Nut w/ Star Washer, 10-24	2
6	00021958	Grease Fitting, 1/4-28, 45 degree	2	32	02000069	Screw, Shoulder Control Rod	3
7	00022560	Hex Nut, 3/8-16, Lock Flange	12	33	02002931	Lapbar Control Assembly, LH	1
8	00061053	Washer, 3/8, SS	2		01004265	Bearing	2
9	01000369	Hex Cap Screw, 3/8-16 x 1.25	2	34	02002542	Brake/Control Rod	2
10	01000372	Carriage Bolt, 3/8-16 x .75	8	35	02002543	Lapbar Control Arm	1
11	01000450	Hex Jam Nut, 3/8-24	4	36	02002555	Lapbar Control Shaft Assembly	1
12	01000451	B/Joint, 3/8-24, Right Hand Female	2	37	02004382	Lapbar/Brake Control Mounting Bracket	1
13	01000600	Flat Washer, 1.4 x .630 x .0515	2	38	02002932	Lapbar Control Assembly, RH	1
14	01000628	Screw, TT, 1/4-20, 0.5, Hex Index Washer	3		01004265	Bearing	2
15	01000635	Nut, Lock, HexFlange, 5/16-18	9	39	02003419	Bushing, .310 x .172 x .688 x .06	4
16	01000956	Carriage Bolt, 5/16-18 x 1.75	4	40	02003532	Control Rod, 3/8-24 x 19.50	2
17	01000960	Belle Washer, .325 x .930 x .045	2	41	02003644	Spacer, .25 ID x .38 OD x 1.13	4
18	01002511	Nut, 3/8-16, Jam	4	42	02003653	Cylinder Return to Neutral	2
19	01002766	Hex Flange Lock Nut, 1/4-20	2	43	02003664	Spacer, .405 ID x 1.0 OD x .72	1
20	01002986	Nut, 3/8-24, Jam, LH Third	2	44	02003666	Hex Cap Screw, 3/8-16 x 3.50	2
21	01003561	Nut, Hex, Center Lock, M8	4	45	02003883	Side Panel, Control, Left	1
22	01003947	U-Nut, 3/8-16, .75	2	46	02003884	Side Panel, Control, Right	1
23	01004003	Flat Washer, 5/8 Nylon	4	47	02004044	Lapbar Pivot Bracket	2
24	01005851	External Washer, 3/8	2	48	02004049	Lapbar Assembly includes:	2
25	01006350	Shaft Collar	2		02002662	Grip, 1.0	2
26	01006898	HHCS, 1/4-20 x 2.0	4	49	732-0470A	Extension Spring, .53 OD x 4.75	1

29HP Kawasaki Engine Assembly- Figure 11 and Parts List

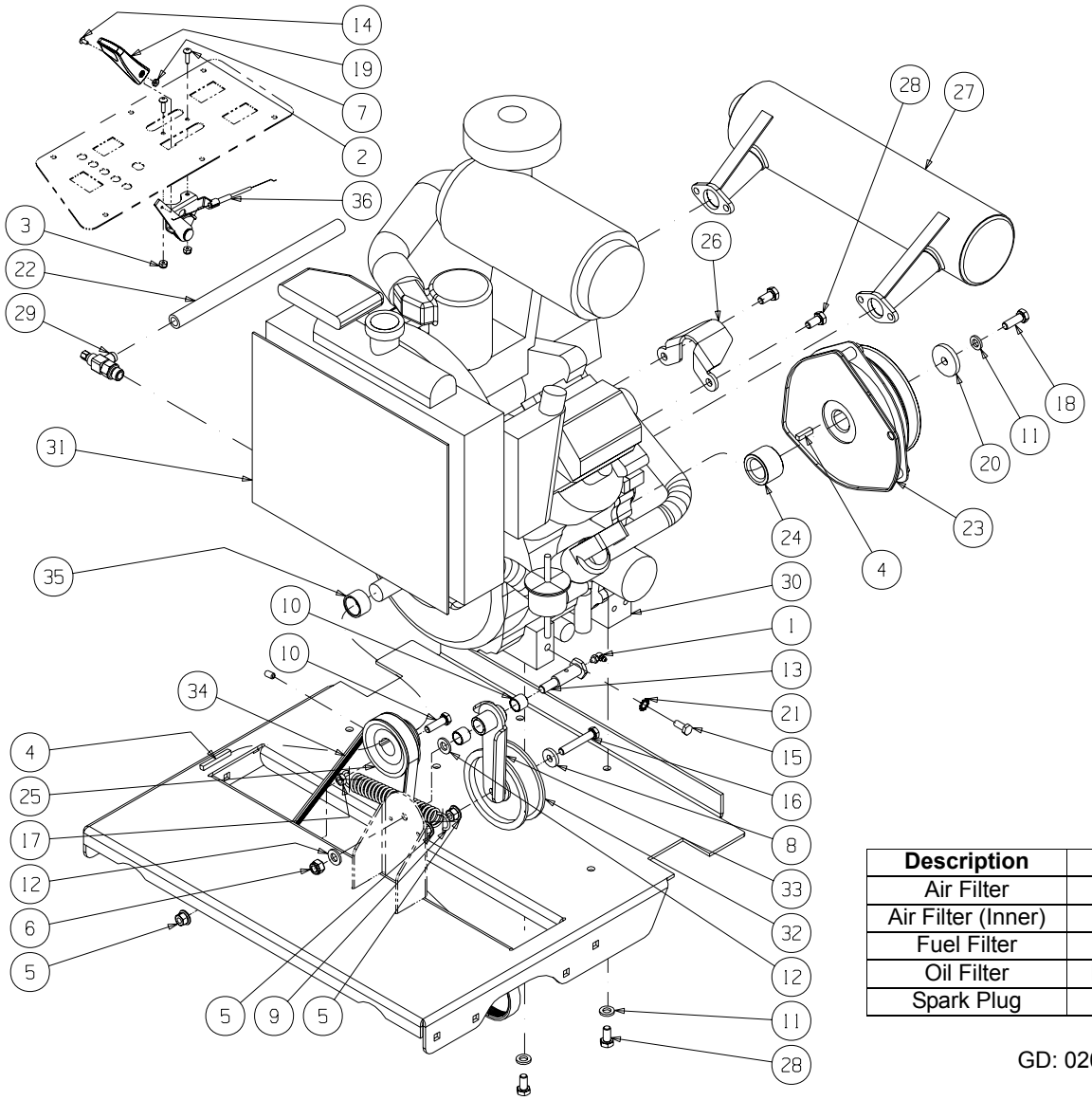

Description	Part Number
Air Filter	KM-11013-7020
Air Filter (Inner)	KM-11013-7019
Fuel Filter	KM-49019-1055
Oil Filter	KM-49065-2078
Spark Plug	KM-BPR4ES

GD: 02003529-11/08/06

Ref. No.	Part No.	Description	Qty.	Ref. No.	Part No.	Description	Qty.
1	00012226	Grease Fitting, 1/4-28 90 Degree	1	20	01005314	Flat Washer, 7/16 ID x 1.75 OD x .25	1
2	00014602	Round Hd. Machine Screw, 10-32 x 3/4	2	21	01005851	Washer, 3/8 ID, External Tooth	2
3	00014608	Lock Nut, Nylon Insert, 10-32	2	22	01006223	Oil Drain Extension Hose	1
4	00021517	Key Stock, 1/4 x 1/4 x 2.00	2	23	01009590	Clutch Brake	1
5	00022560	Nut, 3/8-16, Hex Flange Lock	3	24	01009591	Spacer, 1.75 OD x 1.135 ID x 1.125	1
6	00027279	Nut, 7/16-14, Nylock	1	25	01009594	Pulley, 3.05 OD x 1.0 Bore	1
7	00060056	Nut Washer, W/Star, 8-32	1	26	01009597	Clutch Retainer Bracket	1
8	00083192	Washer, 3/8	1	27	01009614	Muffler, 29HP Horizontal, Kawasaki	1
9	01000199	Extension Spring, 1.0 OD x 5.00	1	28	01009616	Hex Head Cap Screw, M10 x 1.5, 20mm	6
10	01000369	Hex Cap Screw, 3/8-16 x 1.25	1	29	01009621	Oil Valve	1
11	01000389	Lock Washer, 7/16	5	30	01009625	29HP Digital Fuel Injection Engine, Kawasaki	1
12	01000393	Washer, .469 ID x .875 OD x .105	2	31	01009634	Screen, Kawasaki 29HP Radiator	1
13	01000505	Shoulder Screw, 7/16-14	1	32	02000302	Idler Pulley, 3.5 OD	1
14	01000721	Machine Screw, 8-32, .375	1	33	02000305	Idler Arm Assembly	1
15	01000981	HHCS, M10 x 1.25, 20mm	2		01000308	Bearing	2
16	01001366	HHCS, 3/8-16 x 2.25	1	34	02000408	V Belt	1
17	01002511	Jam Nut, 3/8-16	1	35	02002259	Spacer, 1.25 OD x 1.01 ID x .731	1
18	01002885	HHCS, M10 x 1.5, 30mm	1	36	02003001	Throttle Cable, 42.0	1
19	01004004	Control Throttle Knob	1				

29HP Electrical Assembly Kawasaki- Figure 12 and Parts List

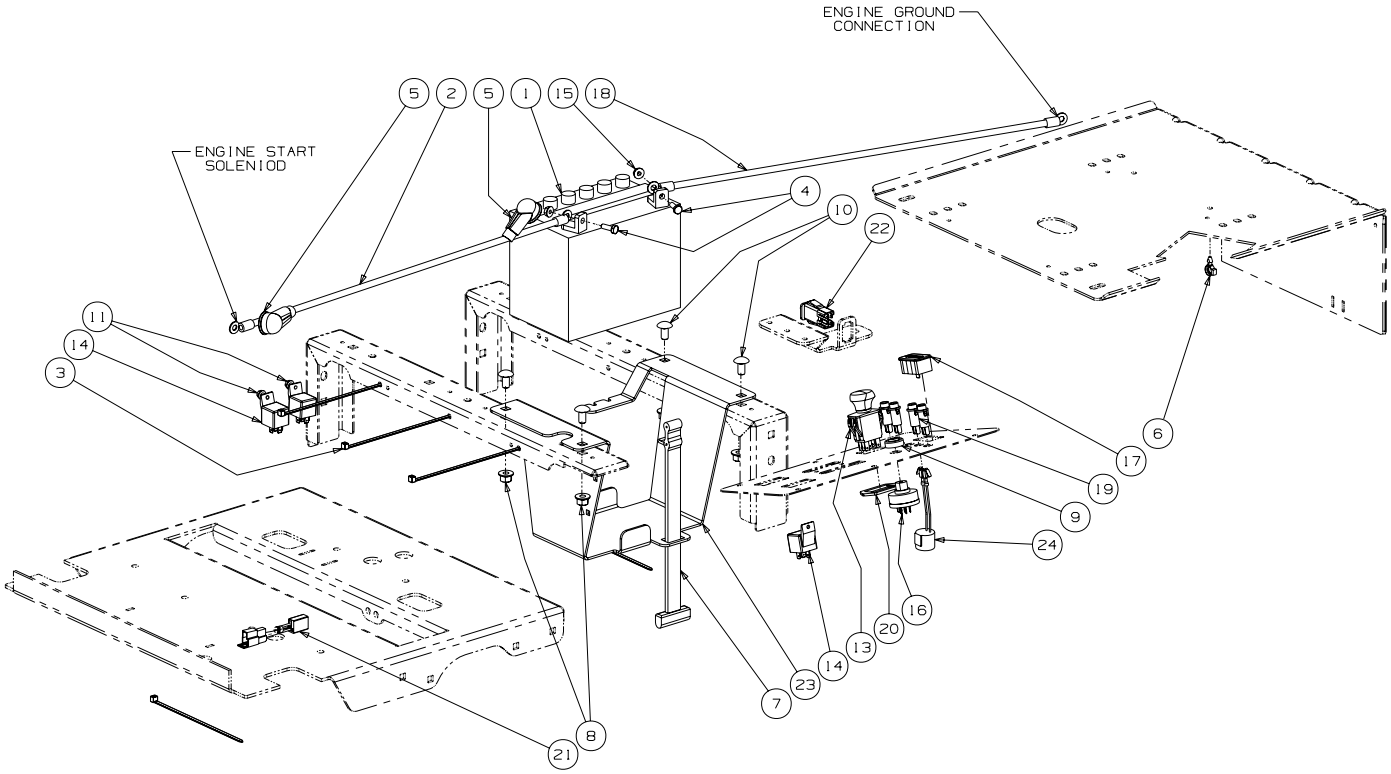

GD: 02002950-10/25/07

Fasten relay (01002251) with self-tapping screw (01000443) on LH control panel shown in Fig. 2.

Ref. No.	Part No.	Description	Qty.	Ref. No.	Part No.	Description	Qty.
1	00012032	Battery, 12V 225CCA 30 Min	1	14	01002251	Relay, 12V 40A	3
2	00012289	Cable, Battery, Red, 36"	1	15	01002766	Hex Flange Lock Nut, 1/4-20	2
3	00012470	Tie, Cable, 3/16 x .05 x 7.4"	5	16	01003581	Switch, Ignition, 6 Pin	1
4	00013131	Screw, Hex, Cap, 1/4-20 x .75	2	17	01005389	Meter, Hour includes:	1
5	00013258	Boot, 1" OD Rubber Battery-PST, Red	2		02004259	Clip	1
6	02003038	Electrical Conduit Clip, 3/8	1	18	01009623	Cable, Battery Black, 34"	1
7	723-3064	Strap, Battery	1	19	01009816	Light Indicator, 12V	4
8	00022560	Flange Lock, Hex Nut, 3/8-16	4	20	01009905	Bracket, PTO Switch Retainer	1
9	00032097	Nut, W/Cap, 5/8-32 Ignition	1	21	01009921	Adaptor	1
10	01000372	Carriage Bolt, 3/8-16 x .75 Long	4	22	02000024	Neutral Switch	1
11	01000628	Self Tapping Screw, 1/4-20 x .50	2	23	02002551	Battery Bracket	1
12	01001811	Hourmeter, Harness (not shown)	1	24	02002588	Alarm, High Temp	1
13	01002111	Switch, Electric, PTO	1	25	02002951	Harness Assembly (not shown)	1

Lift Assembly - Figure 13

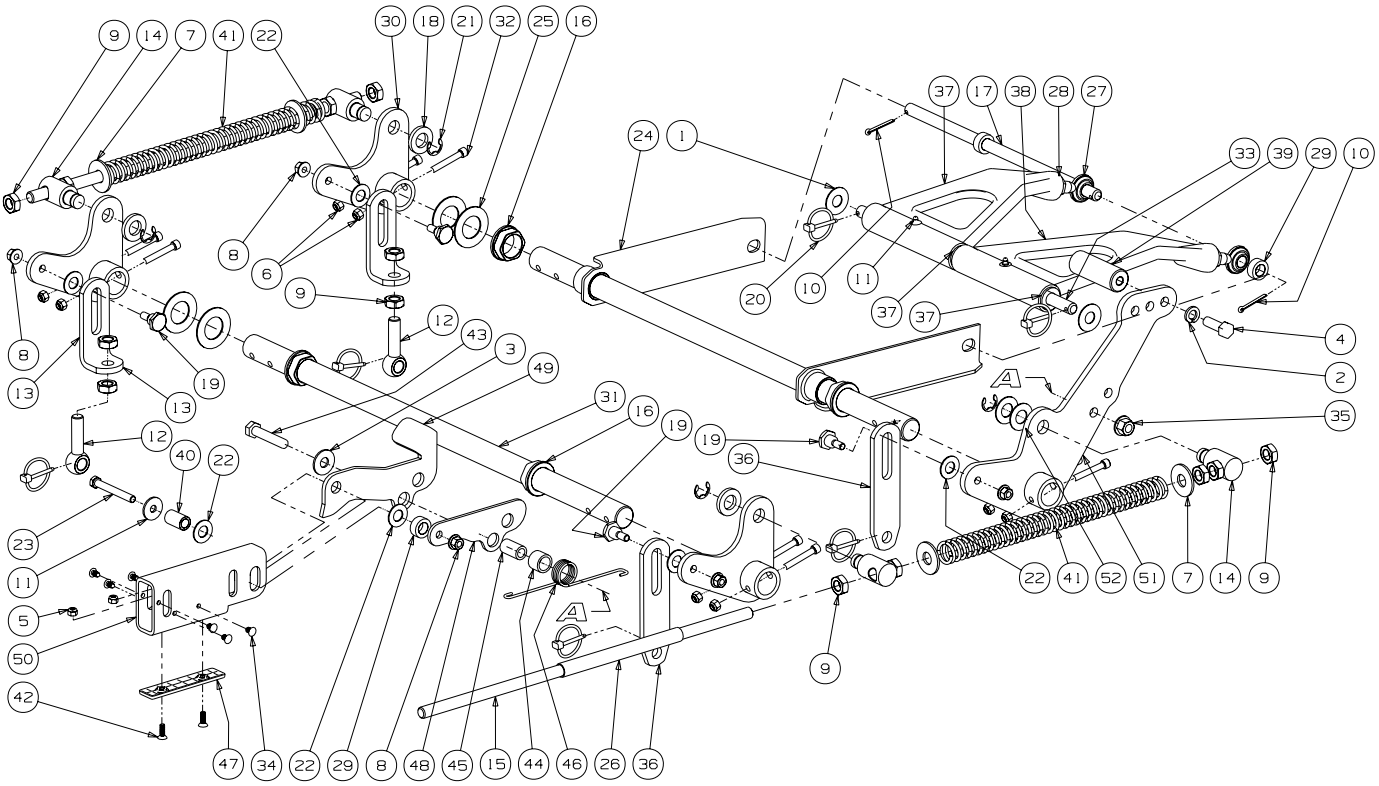

GD: 02005211-10/24/07

Lift Assembly - Parts List for Figure 13

Ref. No.	Part No.	Description	Qty.
1	00002766	Washer, 1.5 x .655 x .055	2
2	00010734	Lock Washer, 1/2	1
3	01000873	Flat Washer, .536 ID x .930 OD x .05	1
4	00011951	Hex Cap Screw, 1/2-13 x 1.50	1
5	00012152	Lock Nut w/Nylon Insert	2
6	00012165	Nut, 5/16-18, Nylock	8
7	00013432	Flat Washer, 5/8	4
8	00022560	Hex Nut, Flange Lock, 3/8-16	5
9	00035632	Jam Nut, 5/8-11	14
10	00060018	Cotter Pin, 3/16 x 1-1	2
11	01000872	Flat Washer, 1.25 x .411 x .100	1
12	01001744	Eye Bolt, 5/8ID	2
13	01001746	Eye Bolt Mount Link, 5/8 ID	2
14	01001855	Ferule Lift	4
15	01001857	Lift Connector Rod	2
16	01001930	Hex Flange Bearing, 1.25 ID	4
17	01002586	Front Lift Link, Rod Mount	1
18	01003123	Spacer, .812 ID x .268 Lg.	3
19	01003535	Shoulder Screw, 0.625 OD x .437 Lg.	4
20	01003993	Linch Pin, 3/16 Dia.	6
21	01003994	E Clip, 3/4 Dia.	4
22	01004003	Nylon Flat Washer, 5/8	6
23	01004127	HHCS, 3/8-16, 3.00	1
24	02005223	Front Frame Strut Assembly	2
25	01006408	Flat Washer, 1.25 ID	4
26	01006823	Hose, 5/8 ID 13/16 OD, 8" LG	2
27	01007487	Rod End, Male	2
28	01007526	Jam Nut, 5/8-18	2
29	01007527	Spacer, .630 ID x 1.06 OD x .440	3
30	01007680	Bellecrank Weldment Assembly	3
31	01007681	Deck Lift Shaft	2
32	01007962	Socket Head CapScrew, 5/16-18 x 2	8
33	01008453	Lift Link Rod	1
34	01008801	Rivet, 1/4 x 5/8	6
35	01010119	Nut, 1/2-13, FlangeLock	1
36	02000561	Deck Link	2
37	02002708	Bearing Lift Brace Assembly, Left Hand includes:	1
	00060078	Grease Fitting	1
	02002384	Bearing	2
38	02002709	Bearing Lift Brace Assembly, Right Hand includes:	1
	00060078	Grease Fitting	1
	02002384	Bearing	2
39	02002596	Deck Lift Foot Pedal	1
40	02003043	Spacer, .375 ID x .625 OD x 2.20	1
41	02002959	Lift Compression Spring	2
42	02003505	Flat Head Cap Screw, 1/4-20 x .75	2
43	02003585	HHCS, 1/2-13 x 2.50	1
44	02003586	Spacer, .76 ID x 1.0 OD x .75	1
45	02002655	Spacer, .51 ID x .75 OD x 1.240	1
46	02003588	Torsion Spring, .120 Wire x 1.32 OD	1
47	02003749	Lift Wear Plate	1
48	02005048	Yoke Plate	1
49	02005050	Lift Link Bracket	1
50	02005103	Lift Tube, 3.0 x 1.5	1
51	02005137	Deck Lift Foot Pedal Weldment	1
52	736-0188	Washer, .76 x 1.49 x .06	2

FD791D 29HP Cylinder/Crankcase- Figure 14 and Parts List

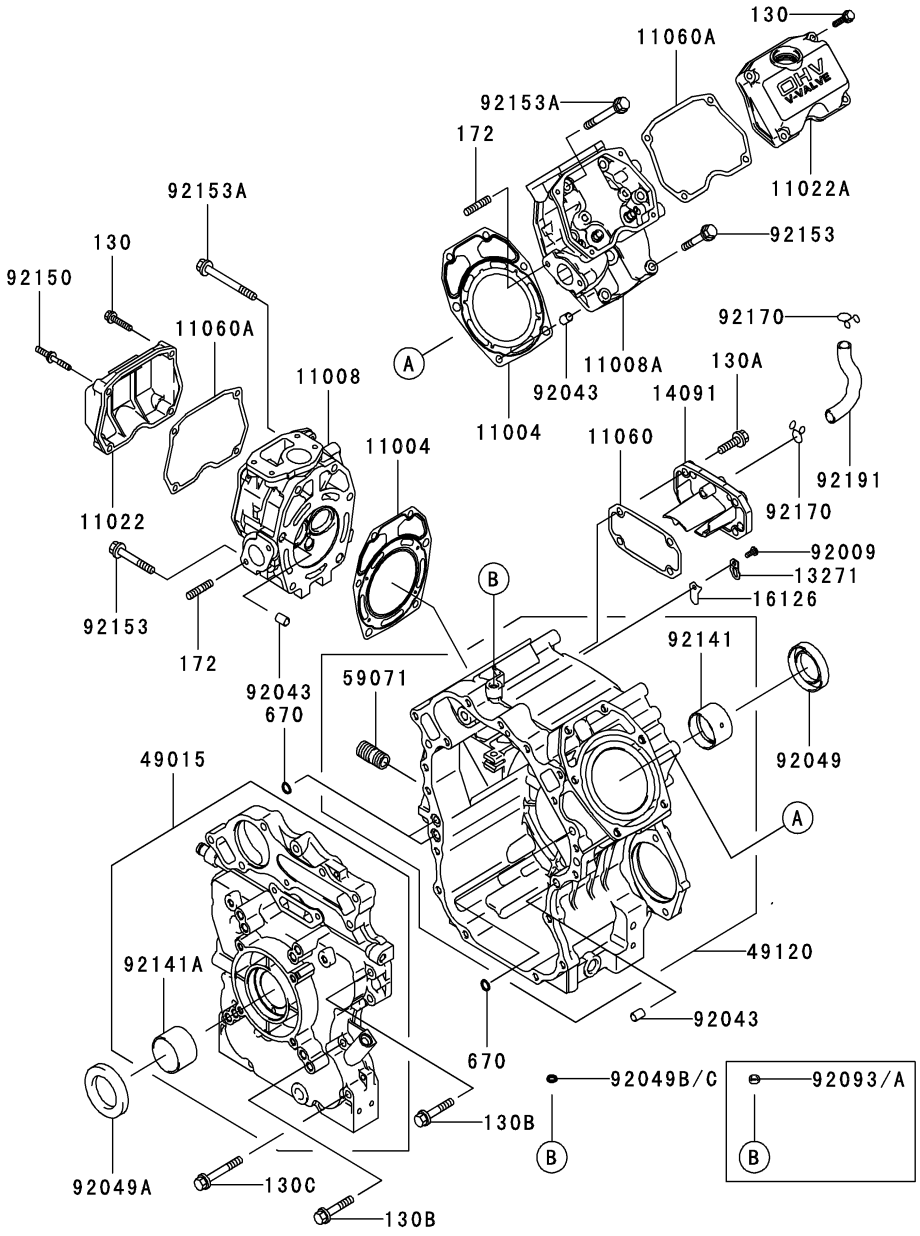

Ref. No.	Part No.	Description	Qty.	Ref. No.	Part No.	Description	Qty.
11004	KM-11004-2142	Gasket-Head	2	92049A	KM-92049-2243	Seal-Oil,ISD 42x65x9 AE	1
11008	KM-11008-2145	Head-Comp-Cylinder	1	92049B	KM-92049-2255	Seal-Oil,VC 8x12x2.5	1
11008A	KM-11008-2146	Head-Comp-Cylinder	1	92141	KM-92141-2118	Bearing-Plane	1
11022	KM-11022-2072	Case-Rocker	1	92141A	KM-92141-2119	Bearing-Plane	1
11022A	KM-11022-2073	Case-Rocker	1	92150	KM-92150-2261	Bolt	1
11060	KM-11060-2466	Gasket,Breath	1	92153	KM-92153-2060	Bolt,8x60	4
11060A	KM-11060-2470	Gasket,Rocker Case	2	92153A	KM-92153-2061	Bolt, 8x85	8
13271	KM-13271-2105	Plate	2	92170	KM-92170-2002	Clamp	2
14091	KM-14091-2064	Cover,Breath	1	92191	KM-92191-2105	Tube	1
16126	KM-16126-2225	Valve,Breath	2	130	KM-130G0630	Bolt-Flanged, 6x30	7
49015	KM-49015-6232	Cover-Crankcase	1	130A	KM-130G0830	Bolt-Flanged, 8x30	4
49120	KM-49120-6134	Crankcase-Comp	1	130B	KM-130G0845	Bolt-Flanged, 8x45	6
59071	KM-59071-2079	Joint	1	130C	KM-130G0860	Bolt-Flanged, 8x60	4
92009	KM-92009-2308	Screw	2	172	KM-172G0822	Bolt-Stud, 8x22	4
92043	KM-92043-1037	Pin	6	670	KM-670B2011	O Ring, 11MM	3
92049	KM-92049-2242	Seal-Oil,ISD 38x58x11 AE	1				

FD791D 29HP Piston/Crankcase- Figure 15 and Parts List

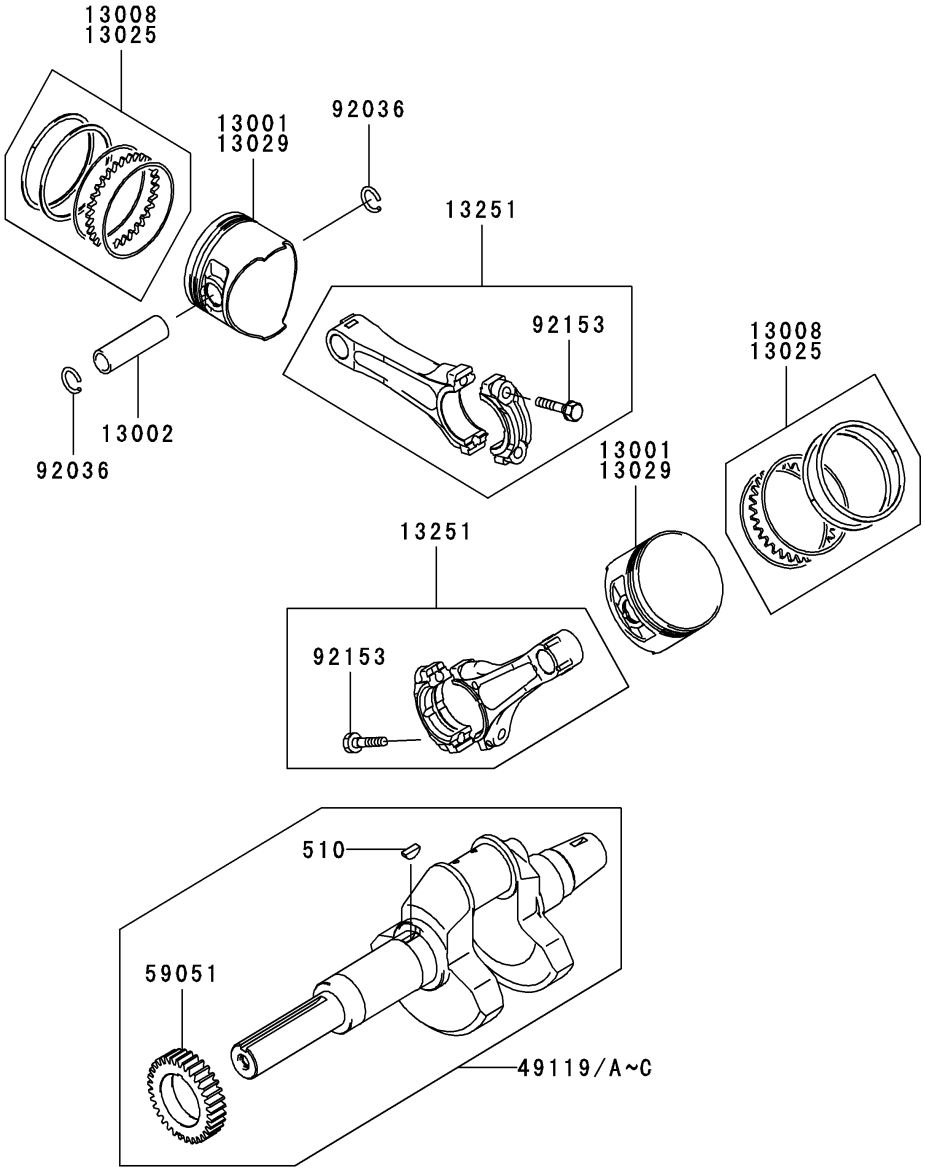

Ref. No.	Part No.	Description	Qty.
13001	KM-13001-2150	Piston-Engine	2
13002	KM-13002-2069	Pin-Piston	2
13008	KM-13008-6007	Ring-Set-Piston	2
13025	KM-13025-2074	Ring-Set-Piston L,0.50	AR
13029	KM-13029-2124	Piston-Engine L,0.50	AR
13251	KM-13251-2058	Rod-Assy-Connecting	2
49119	KM-49119-2226	Crankshaft-Assy	1
59051	KM-59051-2358	Gear-Spur,33T	1
92036	KM-92036-008	Ring-Snap	4
92153	KM-92153-2054	Bolt,7x35.2	4
510	KM-510A5100	Key-Woodruff	1

FD791D 29HP Valve/Camshaft- Figure 16 and Parts List

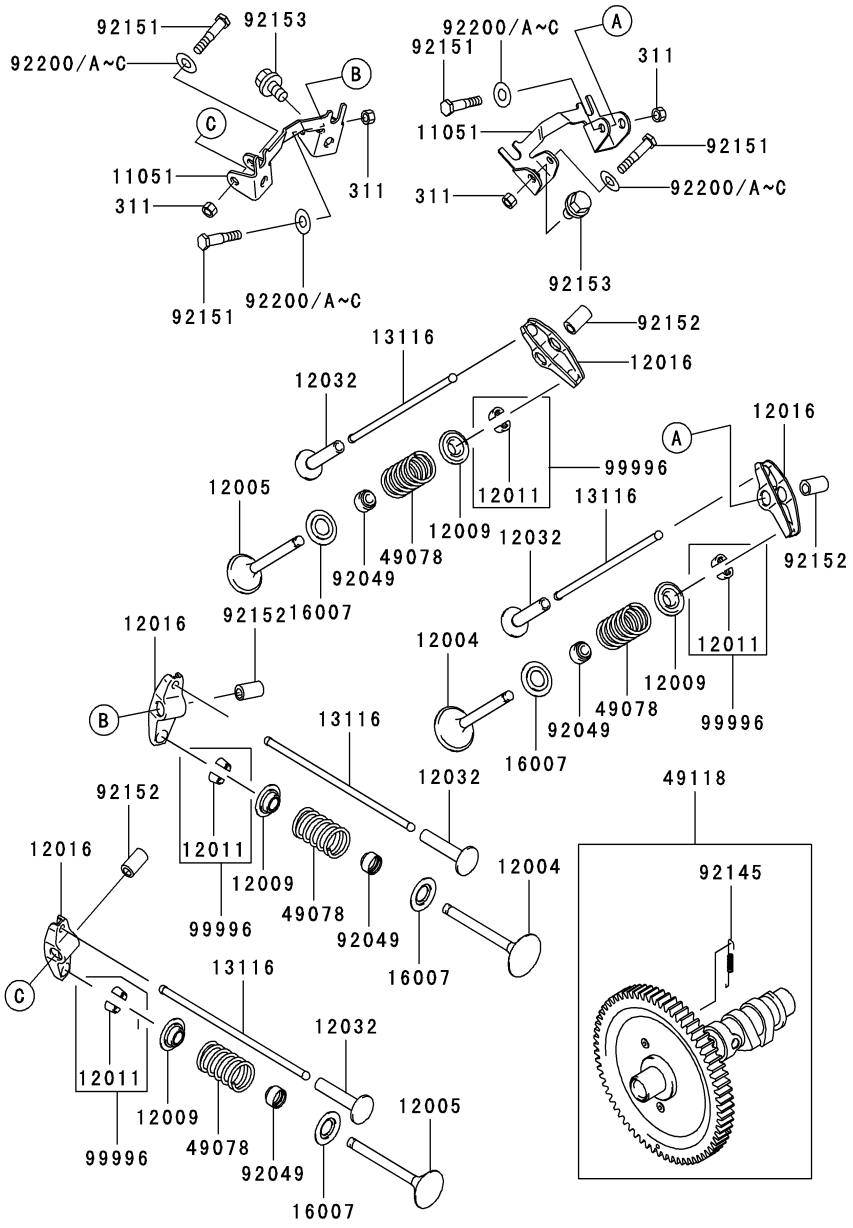

Ref. No.	Part No.	Description	Qty.	Ref. No.	Part No.	Description	Qty.
11051	KM-11051-2092	Bracket	2	49118	KM-49118-2138	Camshaft-Comp	1
12004	KM-12004-2113	Valve-Intake	2	92049	KM-92049-2100	Seal-Oil, VSB 7x12x5.5x9.7	4
12005	KM-12005-2100	Valve-Exhaust	2	92145	KM-92145-2085	Soring	1
12009	KM-12009-2060	Retainer-Valve Spring	4	92151	KM-92151-2165	Bolt, M6	4
12011	KM-12011-2052	Collet	8	92152	KM-92152-2077	Collar	4
12016	KM-12016-2066	Arm-Rocker	4	92153	KM-92153-2062	Bolt, 8x14	4
12032	KM-12032-2060	Tappet	4	92200B	KM-92200-2151	Washer, 8.1x18x0.5	4
13116	KM-13116-2074	Rod-Push	4	99996	KM-99996-2077	Kit,Collet	4
16007	KM-16007-2052	Seat-Spring	4	311	KM-311B0600	Nut-Hex,6MM	4
49078	KM-49078-2060	Spring-Engine Valve	4				

FD791D 29HP Lubrication-Equipment- Figure 17 and Parts List

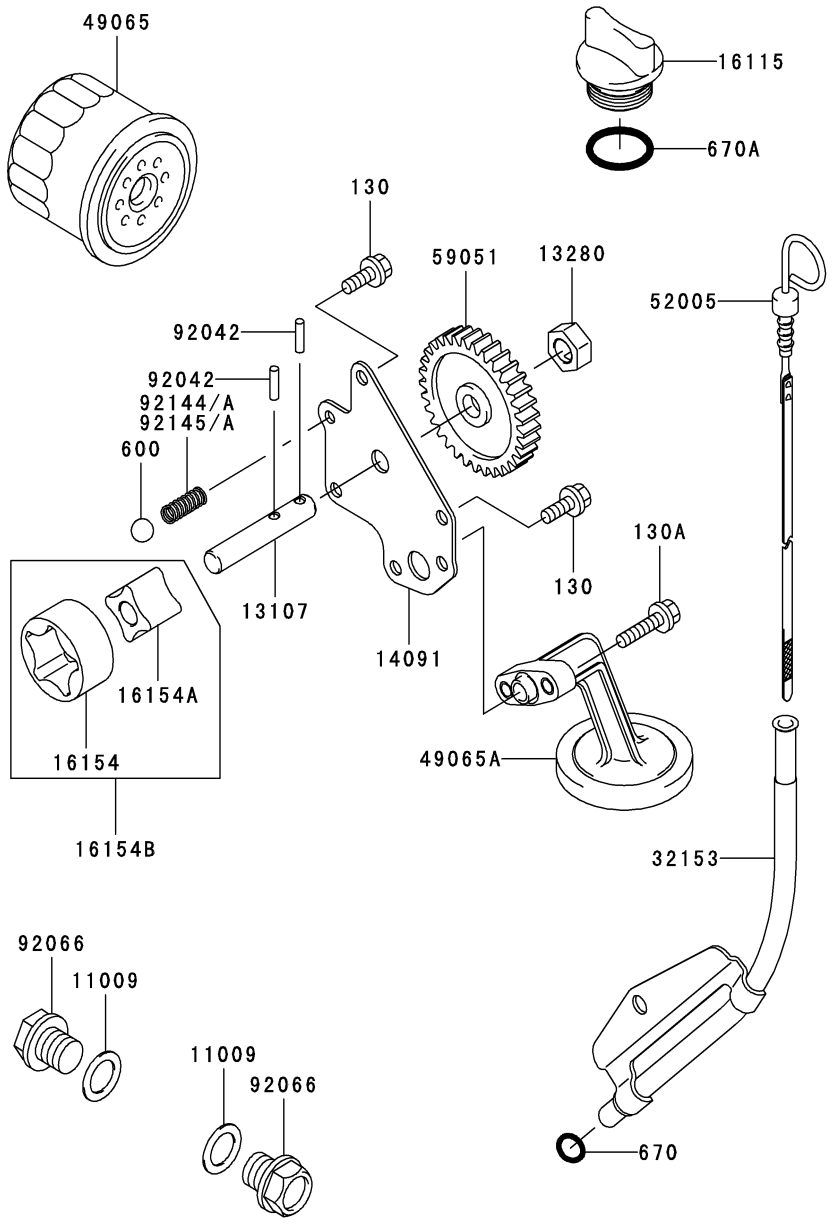

Ref. No.	Part No.	Description	Qty.	Ref. No.	Part No.	Description	Qty.
11009	KM-11009-2566	Gasket,Drain Plug	2	52005	KM-52005-2132	Gauge,Oil	1
13107	KM-13107-2281	Shaft,Oil Pump	1	59051	KM-59051-2354	Gear-Spur,33T	1
13280	KM-13280-2061	Holder,Oil Pump	1	92042	KM-92042-014	Pin	2
14091	KM-14091-2065	Cover-Oil Pump	1	92066	KM-92066-2099	Plug,Drain	2
16115	KM-16115-2126	Cap-Oil Filler	1	92145	KM-92145-2132	Spring	1
16154	KM-16154-1075	Rotor-Pump,Outer	1	130	KM-130G0616	Bolt-Flanged, 6x16	3
16154A	KM-16154-1076	Rotor-Pump,Inner	1	130A	KM-130G0625	Bolt-Flanged, 6x25	2
16154B	KM-16154-1079	Rotor-Pump	1	600	KM-600A1300	Ball-Steel, 13/32"	1
32153	KM-32153-2076-9H	Pipe,Oil Gauge	1	670	KM-670B2010	O-Ring, 10MM	1
49065	KM-49065-2071	Filter-Oil	1	670A	KM-670B3025	O-Ring, 25MM	1
49065A	KM-49065-2082	Filter-Oil	1				

FD791D 29HP Cooling-Equipment- Figure 18 and Parts List

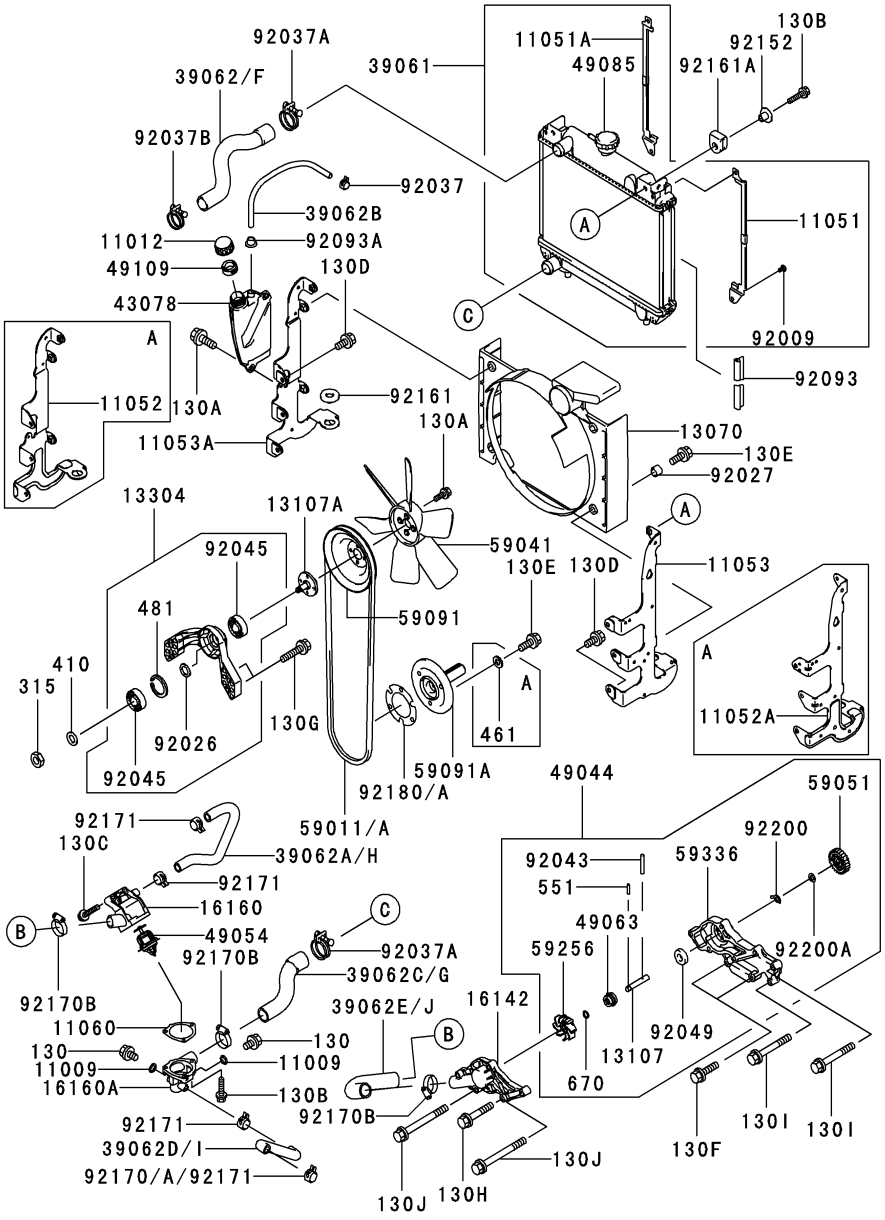

Ref. No.	Part No.	Description	Qty.	Ref. No.	Part No.	Description	Qty.
11009	KM-11009-3028	Gasket,8.2x12x1	2	39062F	KM-39062-2091	Hose-Cooling	1
11012	KM-11012-1084	Cap	1	39062G	KM-39062-2092	Hose-Cooling	1
11051	KM-11051-2103	Bracket,Screen	1	39062H	KM-39062-2098	Hose-Cooling	1
11051A	KM-11051-2104	Bracket,Screen	1	39062I	KM-39062-2100	Hose-Cooling	1
11053	KM-11053-20619H	Bracket	1	39062J	KM-39062-2101	Hose-Cooling	1
11053A	KM-11053-20629H	Bracket	1	43078	KM-43078-2055	Reservoir	1
11060	KM-11060-2475	Gasket,Thermostat	1	49044	KM-49044-2067	Pump-Water	1
13070	KM-13070-2106	Guide,Fan	1	49054	KM-49054-2058	Thermostat	1
13107	KM-13107-2097	Shaft,Impeller	1	49063	KM-49063-1056	Seal-Mechanical	1
13107A	KM-13107-2246	Shaft,Pulley	1	49085	KM-49085-2052	Cap-Assy-Pressure	1
13304	KM-13304-6010	Housing-Assy	1	49109	KM-49109-2057	Element-Breather,Cap-Tank	1
16142	KM-16142-2077	Cover-Pump	1	59011A	KM-59011-2059	Belt,Fan	1
16160	KM-16160-2127	Body,Upp	1	59041	KM-59041-2092	Fan	1
16160A	KM-16160-6001	Body,Valve	1	59051	KM-59051-2355	Gear-Spur,25T	1
39061	KM-39061-2068	Radiator-Assy	1	59091	KM-59091-20559H	Pulley	1
39062B	KM-39062-2086	Hose-Cooling,7.5x10.5x385	1	59091A	KM-59091-2056	Pulley	1

FD791D 29HP Cooling Equipment- Figure 19 and Parts List

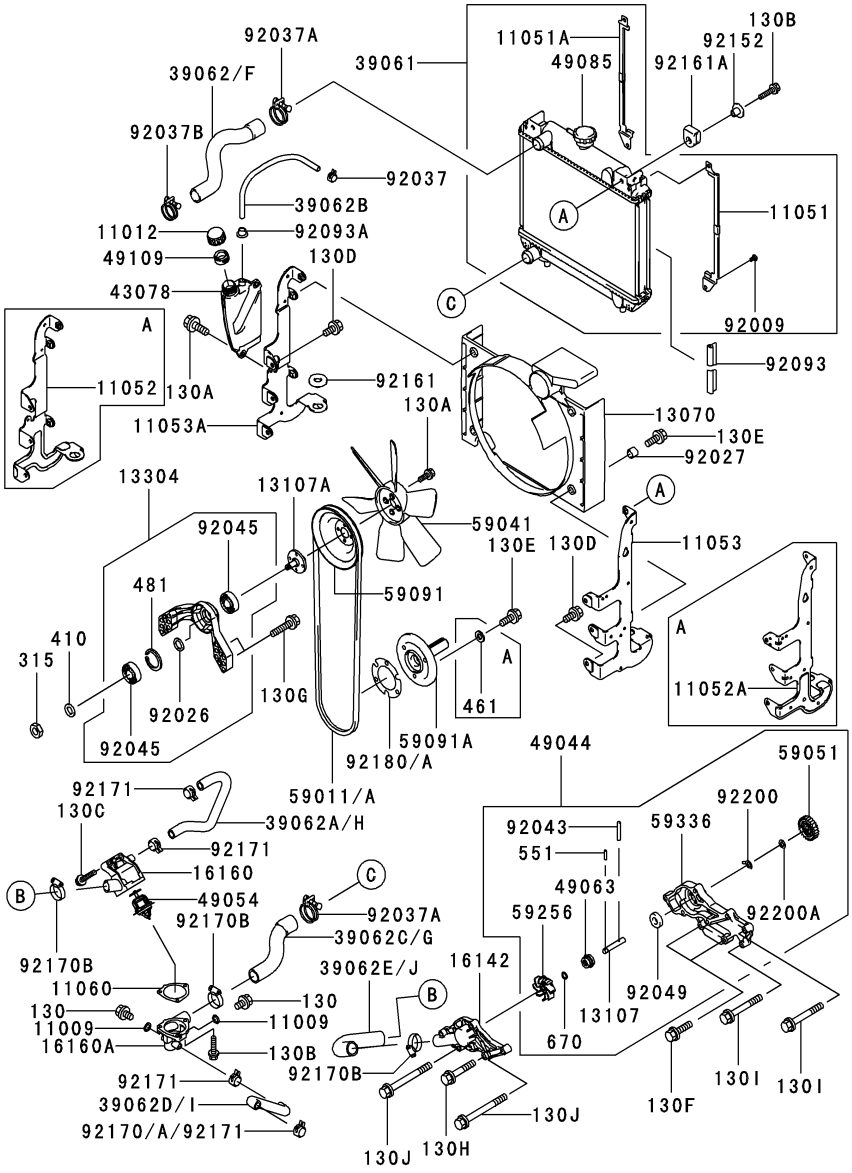

Ref. No.	Part No.	Description	Qty.	Ref. No.	Part No.	Description	Qty.
59256	KM-59256-2069	Impeller	1	92180A	KM-92180-2014	Shim, T=1.2	AR
59336	KM-59336-2078	Case-Pump	1	92200	KM-92200-2134	Washer	1
92009	KM-92009-2460	Screw	4	92200A	KM-92200-2135	Washer, 10.2x19x0.8	1
92026	KM-92026-2311	Spacer, 12x18x1.4	1	130	KM-130C0812	Bolt-Flanged, 8x12	2
92027	KM-92027-1568	Collar, 8.3x11.5x9	4	130A	KM-130G0616	Bolt-Flanged, 6x16	6
92037	KM-92037-2001	Clamp	1	130B	KM-130G0625	Bolt-Flanged, 6x25	5
92037A	KM-92037-2089	Clamp	2	130C	KM-130G0635	Bolt-Flanged, 6x35	2
92037B	KM-92037-2210	Clamp	1	130D	KM-130G0816	Bolt-Flanged, 8x16	4
92043	KM-92043-2237	Pin	1	130E	KM-130G0820	Bolt-Flanged, 8x20	7
92045	KM-92045-2191	Bearing-Ball, 6001DDUC3	2	130F	KM-130G0830	Bolt-Flanged, 8x30	2
92049	KM-92049-2111	Seal-Oil	1	130G	KM-130P0835	Bolt-Flanged, 8x35	4
92093	KM-92093-2114	Seal	2	130H	KM-130G0845	Bolt-Flanged, 8x45	1
92093A	KM-92093-2122	Seal, Hose-Tank	1	130I	KM-130G0860	Bolt-Flanged, 8x60	2
92152	KM-92152-2075	Collar	2	130J	KM-130G0880	Bolt-Flanged8x80	4
92161	KM-92161-2053	Damper, Radiator, LWR	2	315	KM-315B1000	Nut-Hex-Fine, 10mm	1
92161A	KM-92161-2054	Damper-Radiator, UPP	2	410	KM-410B1000	W-Plain-S, 10mm	1
92170	KM-92170-1283	Clamp	1	481	KM-481J2800	Circlip, 28mm	1
92170B	KM-92170-1284	Clamp	3	551	KM-551A0314	Pin-Dowel, 3x14	1
92171	KM-92171-2056	Clamp	3	670	KM-670B1507	O Ring, 7mm	1
92180	KM-92180-2013	Shim, T=0.6	AR				

FD791D 29HP Electric-Equipment- Figure 20 and Parts List

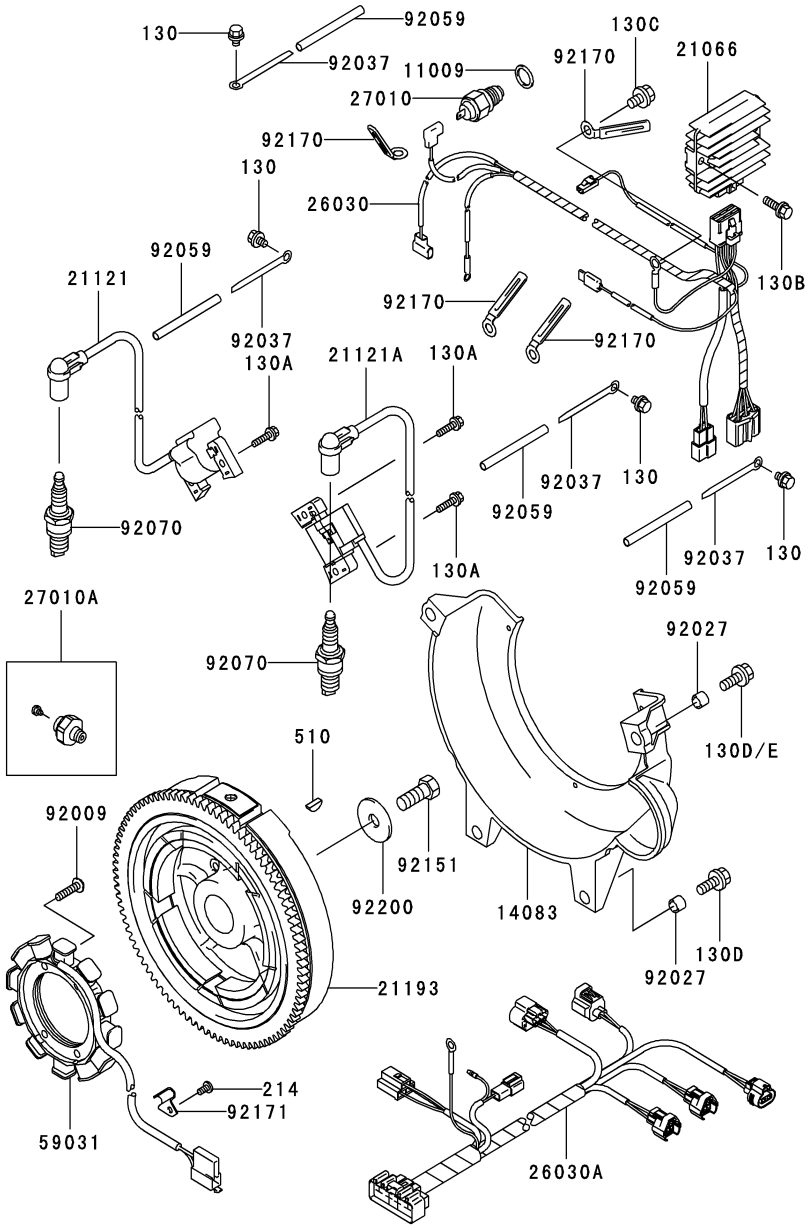

Ref. No.	Part No.	Description	Qty.	Ref. No.	Part No.	Description	Qty.
11009	KM-11009-2766	Gasket, 16x24x1	1	92059	KM-92059-2011	Tube, 5x6x75	4
14083	KM-14083-2055	Cover-Flywheel	1	92070	KM-92070-2112	Plug-Spark, BPR4ES(NGK), Solid	2
21066	KM-21066-2070	Regulator-Voltage	1	92151	KM-92151-2097	Bolt, 12x30	1
21121	KM-21121-2090	Coil-Ignition, No.1	1	92170	KM-92170-2060	Clamp	4
21121A	KM-21121-2091	Coil-Ignition, No. 2	1	92171	KM-92171-2060	Clamp	1
21193	KM-21193-2187	Flywheel Assy	1	92200	KM-92200-2119	Washer, 12.2x40x3.0	1
26030	KM-26030-2324	Harness	1	130	KM-130J0608	Bolt-Flanged, 6x8	4
26030A	KM-26030-2331	Harness	1	130A	KM-130G0520	Bolt-Flanged, 5x20	4
27010	KM-27010-2182	Switch	1	130B	KM-130G0620	Bolt-Flanged, 6x20	2
27010A	KM-27010-2234	Switch	1	130C	KM-130G0812	Bolt-Flanged, 8x12	1
59031	KM-59031-2123	Coil-Charging	1	130D	KM-130G0825	Bolt-Flanged, 8x25	2
92009	KM-92009-2273	Screw, 6x25	4	130E	KM-130G0830	Bolt-Flanged, 8x30	2
92027	KM-92027-1568	Collar, 8.3x11.5x9	4	214	KM-214B0510	Screw-Pan+-, 5x10	1
92037	KM-92037-2171	Clamp	4	510	KM-510A5100	Key-Woodruff	1

FD791D 29HP Control-Equipment- Figure 21 and Parts List

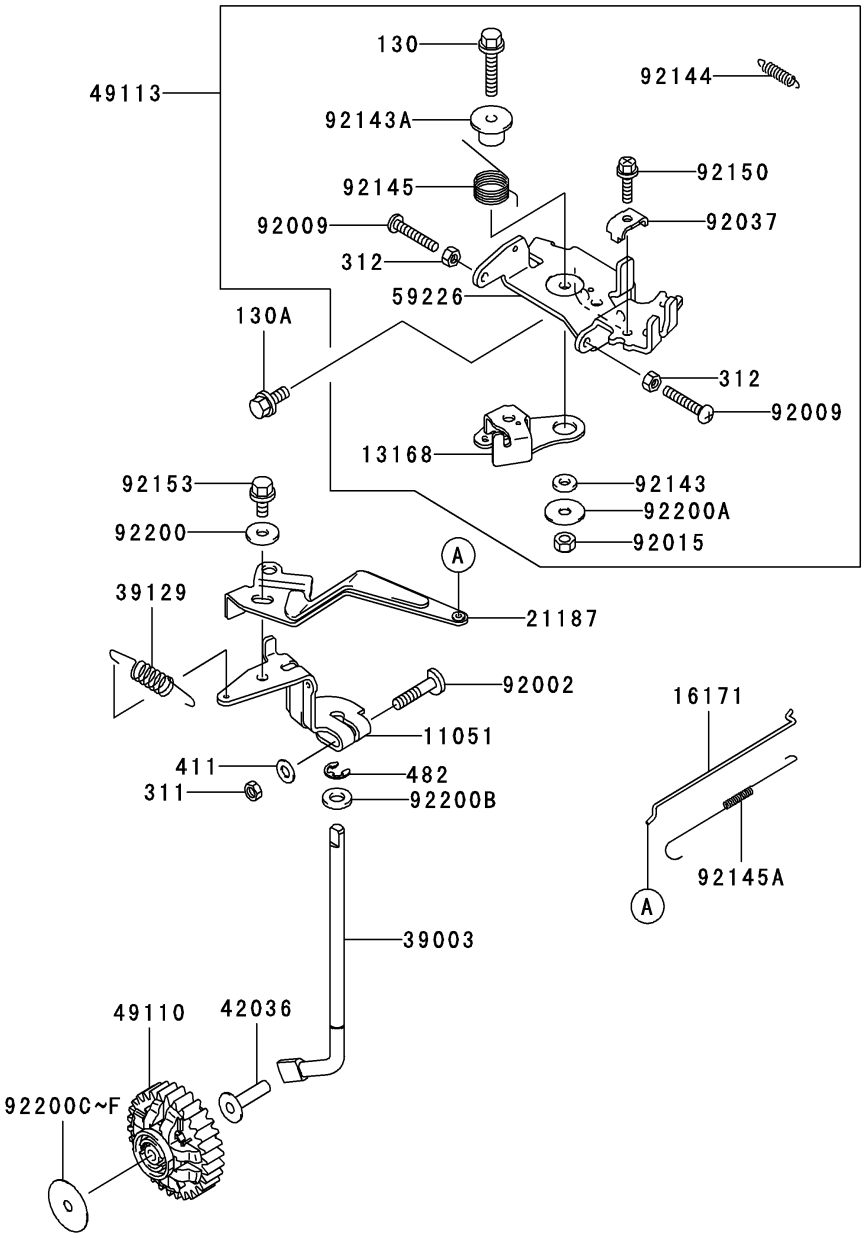

Ref. No.	Part No.	Description	Qty.	Ref. No.	Part No.	Description	Qty.
11051	KM-11051-2113	Bracket	1	92144	KM-92144-2052	Spring	1
13168	KM-13168-2466	Lever, Throttle	1	92145	KM-92145-2058	Spring	1
16171	KM-16171-2094	Link	1	92145A	KM-92145-2106	Spring	1
21187	KM-21187-2076	Arm-Assy	1	92150	KM-92150-2182	Bolt, 5x18	1
39003	KM-39003-2091	Arm-Pivot	1	92153	KM-92153-0009	Bolt, 6x12	1
39129	KM-39129-2105	Spring-Governor	1	92200	KM-92200-2035	Washer	1
42036	KM-42036-2060	Sleeve	1	92200A	KM-92200-2035	Washer, 6.5x22x1.2	1
49110	KM-49110-2094	Governor-Assy	1	92200B	KM-92200-2120	Washer, 8.3x16x2.3	1
49113	KM-49113-2173	Panel-Comp-Control	1	92200E	KM-92200-2152	Washer, 6.2x30x0.5	1
59226	KM-59226-2328	Panel-Control	1	130	KM-130G0630	Bolt-Flanged, 6x30	1
92002	KM-92002-2269	Bolt, 6x28	1	130A	KM-130G0614	Bolt-Flanged, 6x14	2
92009	KM-92009-2381	Screw, 5x30	2	311	KM-311B0600	Nut-Hex, 6mm	1
92015	KM-92015-1339	Nut	1	312	KM-312B0500	Nut-Hex, 5mm	2
92037	KM-92037-2209	Clamp	1	411	KM-411B0600	Washer-Plain, 6mm	1
92143	KM-92143-2135	Collar, 6x13x2.3	1	482	KM-482J7000	Circlip-Type-E, 7mm	1
92143A	KM-92143-2148	Collar	1				

FD791D 29HP Throttle-Equipment- Figure 22 and Parts List

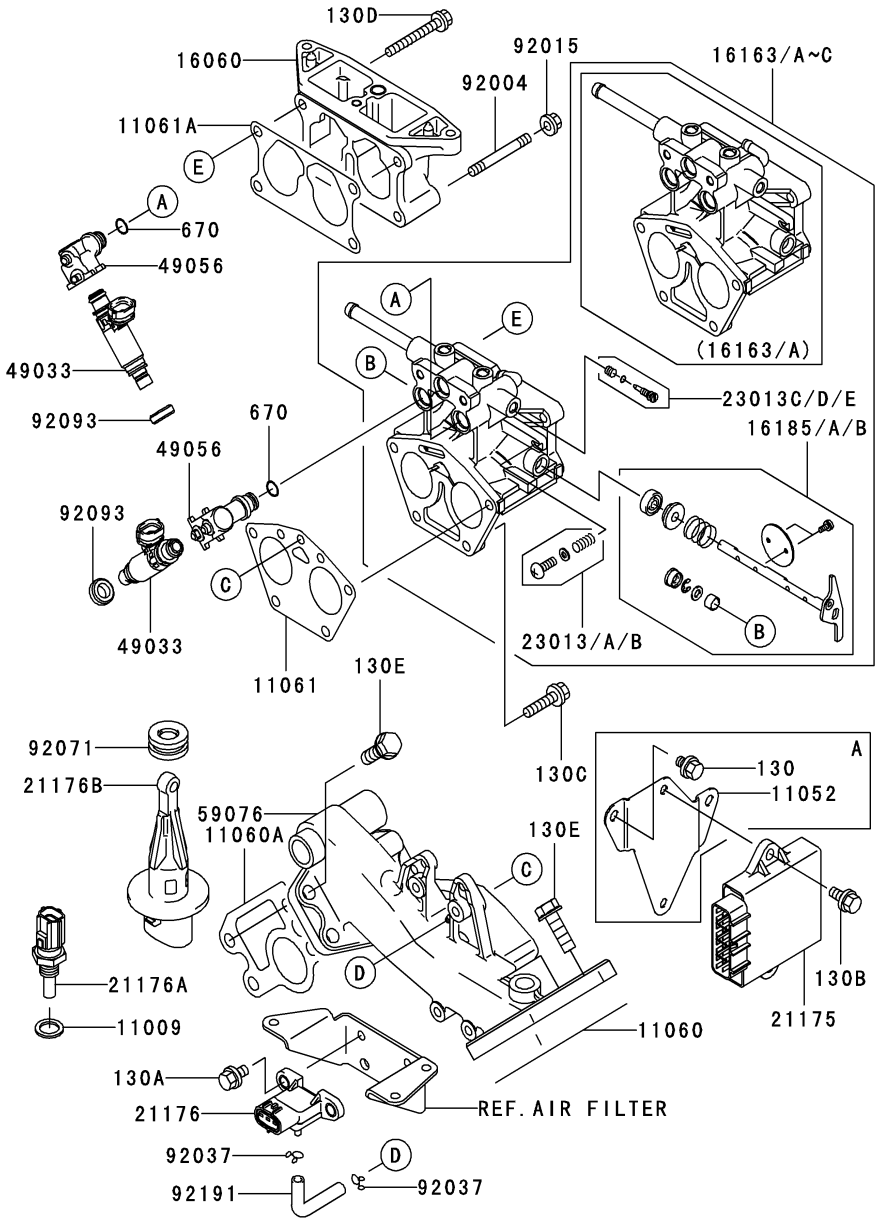

Ref. No.	Part No.	Description	Qty.	Ref. No.	Part No.	Description	Qty.
11009	KM-11009-1376	Gasket, 12.5x18x1.5	1	49056	KM-49056-2060	Pipe-Injection	2
11060	KM-11060-2468	Gasket, Intake Manifold	1	59076	KM-59076-2080	Manifold-Intake	1
11060A	KM-11060-2469	Gasket, Intake Manifold	1	92004	KM-92004-2133	Stud, 6x100	2
11061	KM-11061-2058	Gasket, Throttle	1	92015	KM-92015-1193	Nut	2
11061A	KM-11061-2075	Gasket, Pipe-Intake	1	92037	KM-92037-2163	Clamp	2
16060	KM-16060-2194	Pipe-Intake	1	92071	KM-92071-2140	Grommet	1
16163B	KM-16163-2067	Throttle Assy	1	92093	KM-92093-2119	Seal	2
16185	KM-16185-2046	Valve-Assy-Throttle	1	92191	KM-92191-2133	Tube, 4x7x65	1
21175	KM-21175-2059	Control Unit-Electronic	1	130A	KM-130G0610	Bolt-Flanged, 6x10	2
21176	KM-21176-1095	Sensor	1	130B	KM-130G0612	Bolt-Flanged, 6x25	2
21176A	KM-21176-2097	Sensor	1	130C	KM-130G0625	Bolt-Flanged, 6x45	2
21176B	KM-21176-2106	Sensor	1	130D	KM-130G0645	Bolt-Flanged, 6x45	2
23013	KM-23013-2065	Screw-Assy	1	130E	KM-130G0825	Bolt-Flanged, 8x25	8
23013C	KM-23013-2066	Screw-Assy	1	670	KM-670E1508	O Ring, 8mm	1
49033	KM-49033-2059	Nozzle-Injection	2				

FD791D 29HP Air-Filter/Muffler- Figure 23 and Parts List

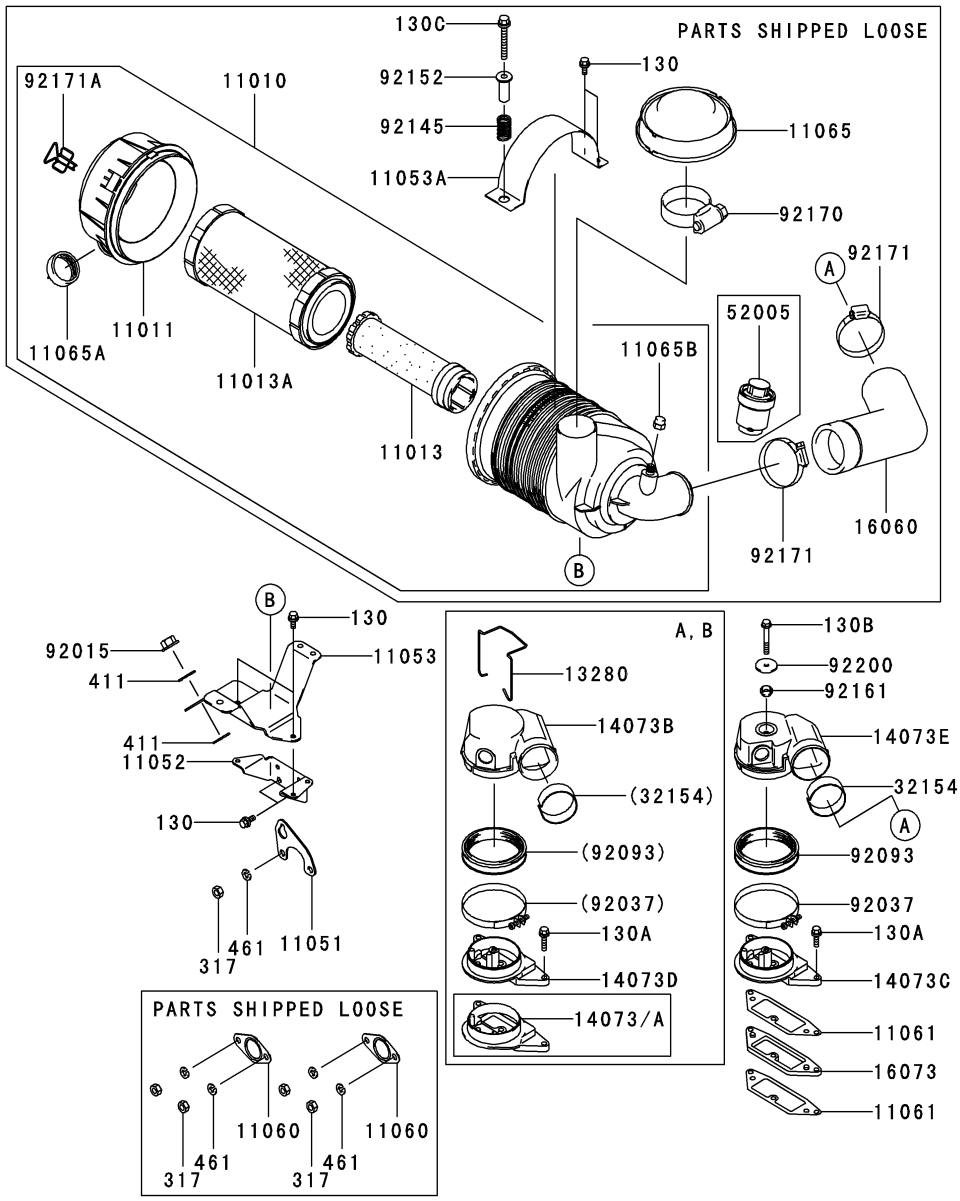

Ref. No.	Part No.	Description	Qty.	Ref. No.	Part No.	Description	Qty.
11010	KM-11010-2571	Filter-Assy-Air	1	52005	KM-52005-2152	Guage	1
11011	KM-11011-7014	Case-Air Filter	1	92015	KM-92015-1193	Nut	1
11013	KM-11013-7019	Element-Air Filter	1	92037	KM-92037-1654	Clamp	1
11013A	KM-11013-7020	Element-Air Filter	1	92093	KM-92093-2118	Seal	1
11051	KM-11051-2088	Bracket	1	92145	KM-92145-2120	Spring	1
11052	KM-11052-2062	Bracket	1	92152	KM-92152-2083	Collar	1
11053	KM-11053-20559H	Bracket, Lower	1	92161	KM-92161-2058	Damper	1
11053A	KM-11053-20569H	Bracket, Upper	1	92170	KM-92170-2075	Clamp	1
11060	KM-11060-2467	Gasket, Muffler	2	92171	KM-92171-2076	Clamp	2
11061	KM-11061-2085	Gasket	2	92171A	KM-92171-7009	Clamp	2
11065	KM-11065-7006	Cap	1	92200	KM-92200-2144	Washer	1
11065A	KM-11065-7008	Cap	1	130	KM-130G0614	Bolt-Flanged, 6x14	6
11065B	KM-11065-7009	Cap	1	130A	KM-130G0625	Bolt-Flanged, 6x25	3
14073C	KM-14073-2084	Duct, Low	1	130B	KM-130G0645	Bolt-Flanged, 6x45	1
14073E	KM-14073-2086	Duct, Upp	1	130C	KM-130G0855	Bolt-Flanged, 8x55	1
16060	KM-16060-2208	Pipe-Intake	1	317	KM-317R0800	Nut-Hex-Small, 8mm	5
16073	KM-16073-2216	Insulator	1	411	KM-411B0600	Washer-Plain, 6mm	2
32154	KM-32154-2059	Pipe, Inside Duct	1	461	KM-461F0800	Washer-Spring, 8mm	5

FD791D 29HP Fuel-Tank/Fuel-Valve- Figure 24 and Parts List

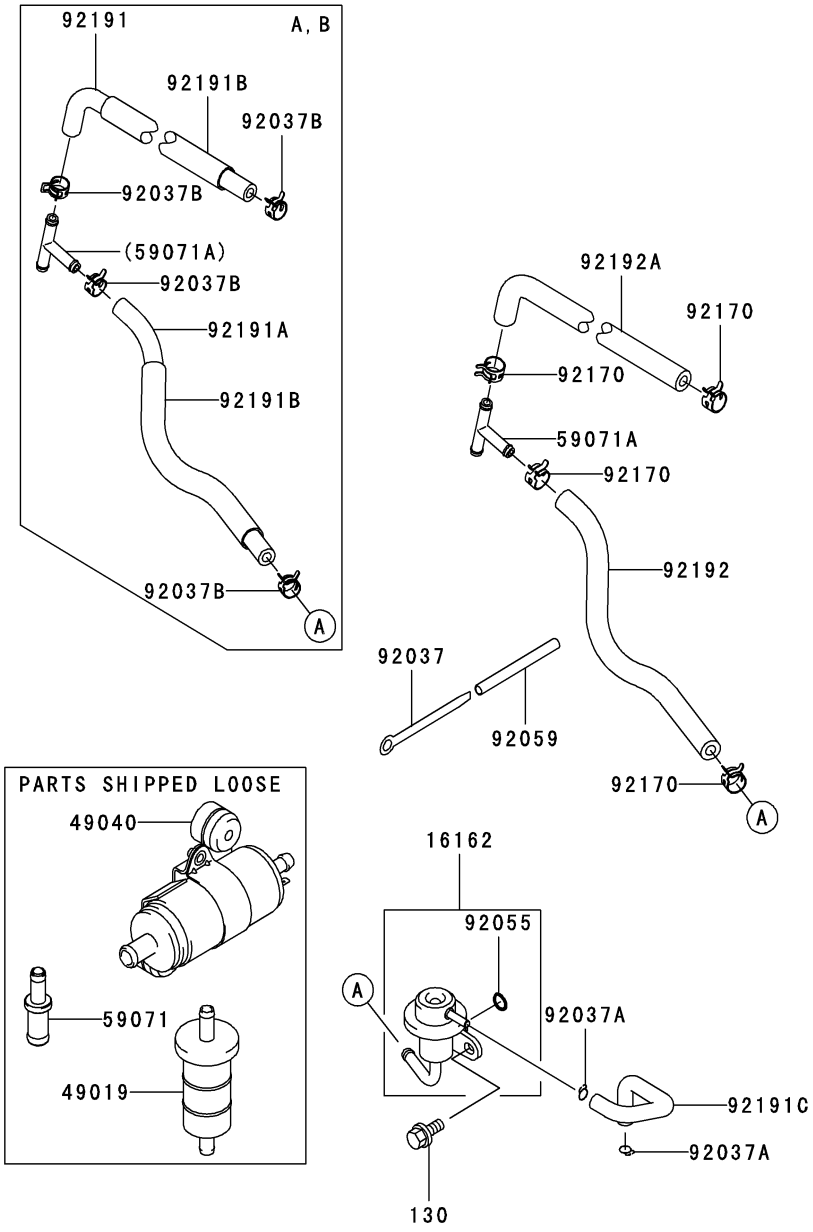

Ref. No.	Part No.	Description	Qty.	Ref. No.	Part No.	Description	Qty.
16162	KM-16162-2055	Regulator-Fuel	1	92055	KM-92055-2187	Ring-O, Regulator-Fuel	1
49019	KM-49019-1055	Filter-Fuel	1	92059	KM-92059-2011	Tube, 5x6x75	1
49040	KM-49040-2079	Pump-Fuel	1	92170	KM-92170-2009	Clamp	4
59071	KM-59071-2141	Joint	1	92191C	KM-92191-2165	Tube	1
59071A	KM-59071-3705	Joint	1	92192	KM-92192-2108	Tube, 6.2x13.2x200	1
92037	KM-92037-2171	Clamp	1	92192A	KM-92192-2109	Tube, 6.2x13.2x230	1
92037A	KM-92037-2083	Clamp	2	130	KM-130G0612	Bolt-Flanged, 6x12	2

FD791D 29HP Starter- Figure 25 and Parts List

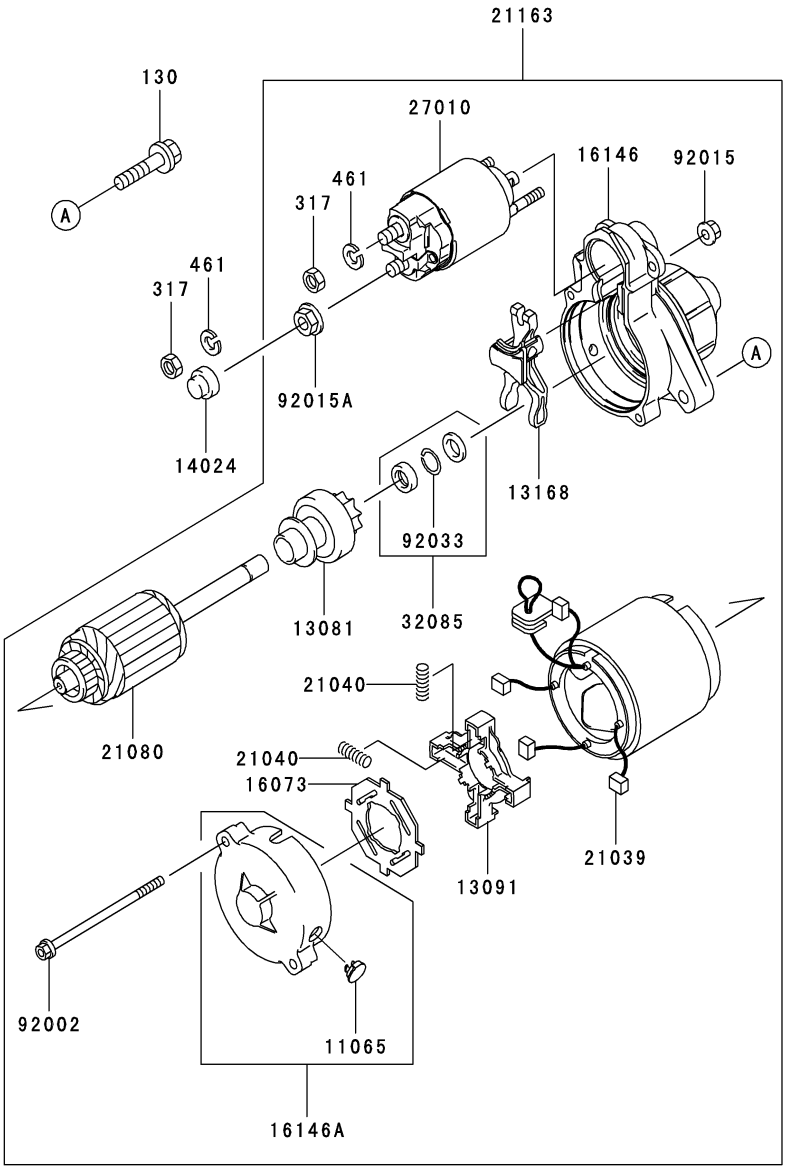

Ref. No.	Part No.	Description	Qty.	Ref. No.	Part No.	Description	Qty.
11065	KM-11065-2118	Cap	1	21163	KM-21163-2120	Starter-Electric	1
13081	KM-13081-2108	Clutch-Assy	1	27010	KM-27010-2122	Switch	1
13091	KM-13091-2068	Holder, Brush	1	32085	KM-32085-2097	Stopper	1
13168	KM-13168-2131	Lever, Shift	1	92002	KM-92002-2277	Bolt	2
14024	KM-14024-2205	Cover	1	92015	KM-92015-2146	Nut	2
16073	KM-16073-2098	Insulator	1	92015A	KM-92015-2147	Nut	1
16146	KM-16146-2225	Cover-Assy	1	92033	KM-92033-2081	Ring-Snap	1
16146A	KM-16146-2235	Cover-Assy	1	130	KM-130P0835	Bolt-Flanged, 8x35	2
21039	KM-21039-2059	Brush	4	317	KM-317B0800	Nut-Hex-Small, 8mm	2
21040	KM-21040-2052	Spring-Brush	4	461	KM-461F0800	Washer-Spring, 8mm	2
21080	KM-21080-2054	Amrature	1				

FD791D 29HP Label- Figure 26 and Parts List

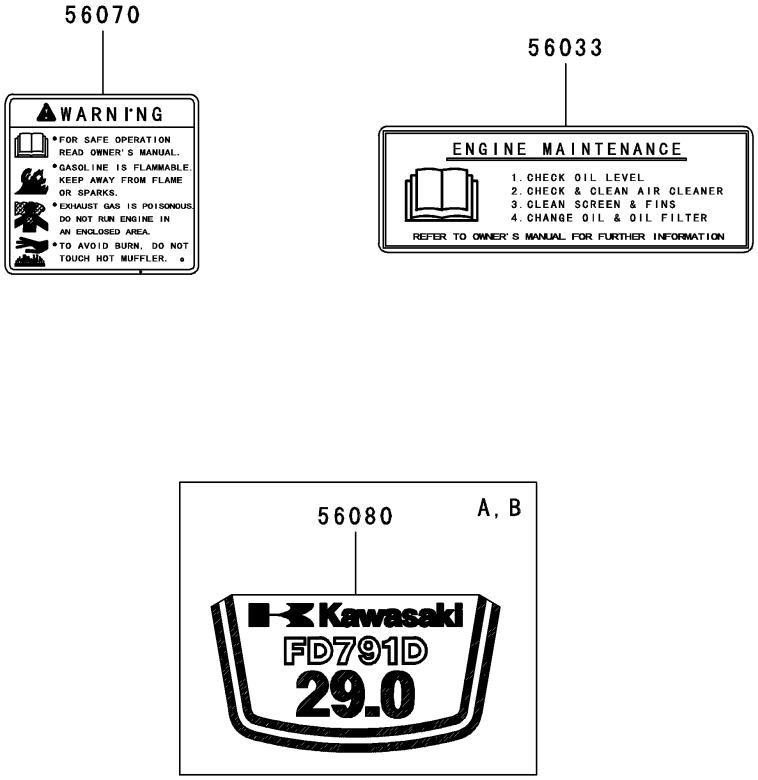

Ref. No.	Part No.	Description	Qty.
56033	KM-56033-2078	Label-Manual	1
56070	KM-56070-2066	Label-Warning	1
56080A	KM-56080-2411	Label-Brand	1

Right Hand and Left Hand Wheel Motors- Figure 27

whitedriveproducts

Hydraulic Motor Exploded View

02004441 & 02004442

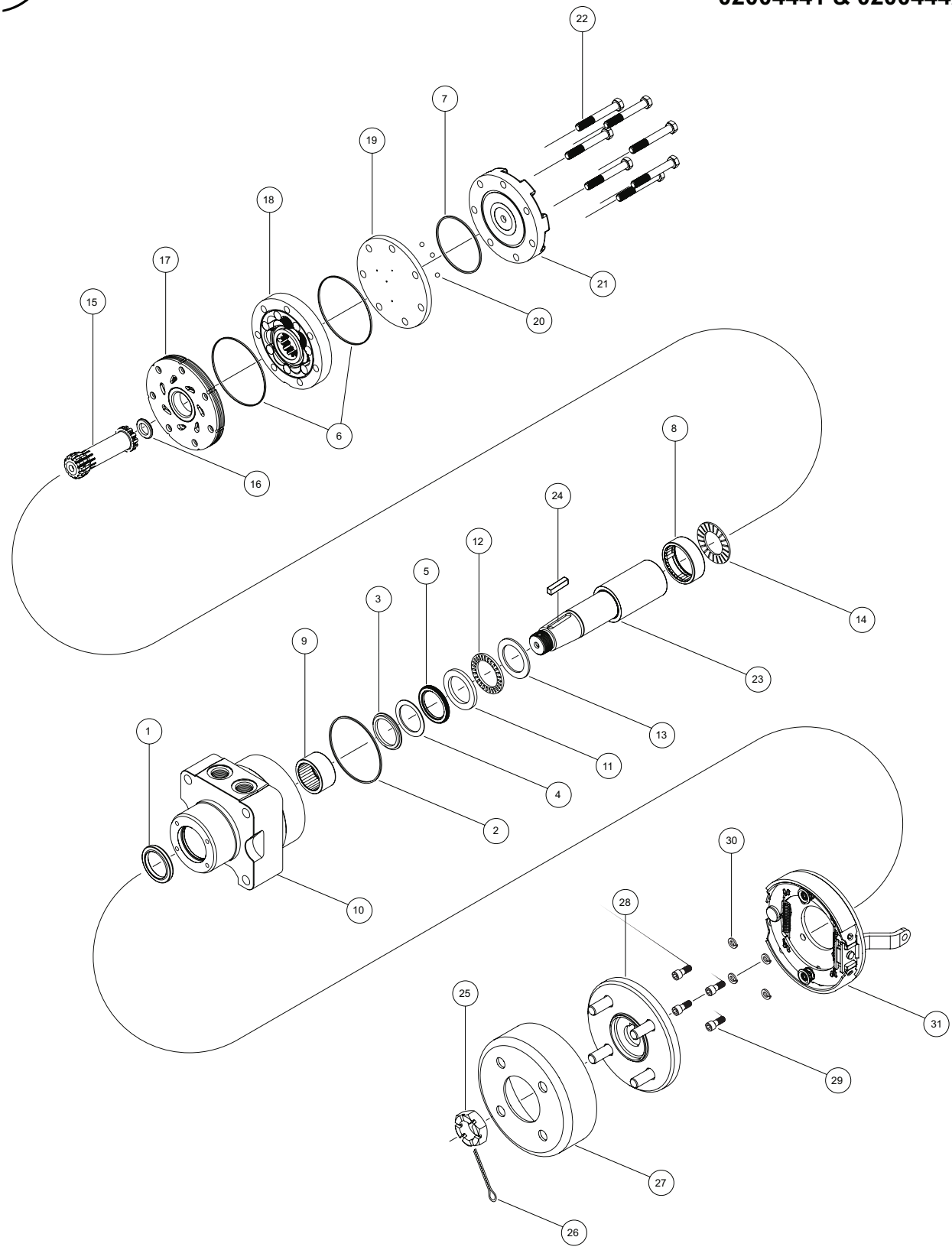

Right Hand and Left Hand Wheel Motors- Parts List for Figure 27

Ref. No.	Part No.	Description	Qty.
1		Dust Seal	1
2		Housing Seal	1
3		Back Up Ring	1
4		Back Up Seal	1
5		Shaft Seal	1
6		Body Seals	2
7		Endcover Seal	1
8	500444004	Rear Housing Bearing includes (items 1-8)	1
9	530018000	Front Housing Bearing	1
10	530013012	Housing	1
11	500018283	Front Thrust Washer	1
12	500018282	Front Thrust Bearing	1
13	300018002	Thrust Washer	1
14	500018059	Rear Thrust Bearing	1
15	500014009	Drive Link	1
16	500018185	Drive Link Spacer	1
17	500015006	Manifold	1
18	500147002	Rotor Set	1
19	500012001	Balance Plate	1
20	500018048	Steel Balls	3
21	500016001	Endcover	1
22	500445014	Assembly Bolts	7
23	500011315	Shaft	1
24	500449106	Shaft Key	1
25	500449304	Shaft Nut	1
26	400018015	Cotter Pin	1
27	530018007	6" Stamped Drum	1
28	530018005	4-Lug Knott Hub	1
29	400180050	Mounting Bolts	4
30	400180045	Lock Washers	4
31	530018006	Knott Brake	1

Left Hand BDP-12 Hydraulic Pump- Figure 28

PART NO. 02001100

PJ-5HCC-GH1A-XXXX SERVICE DRAWING

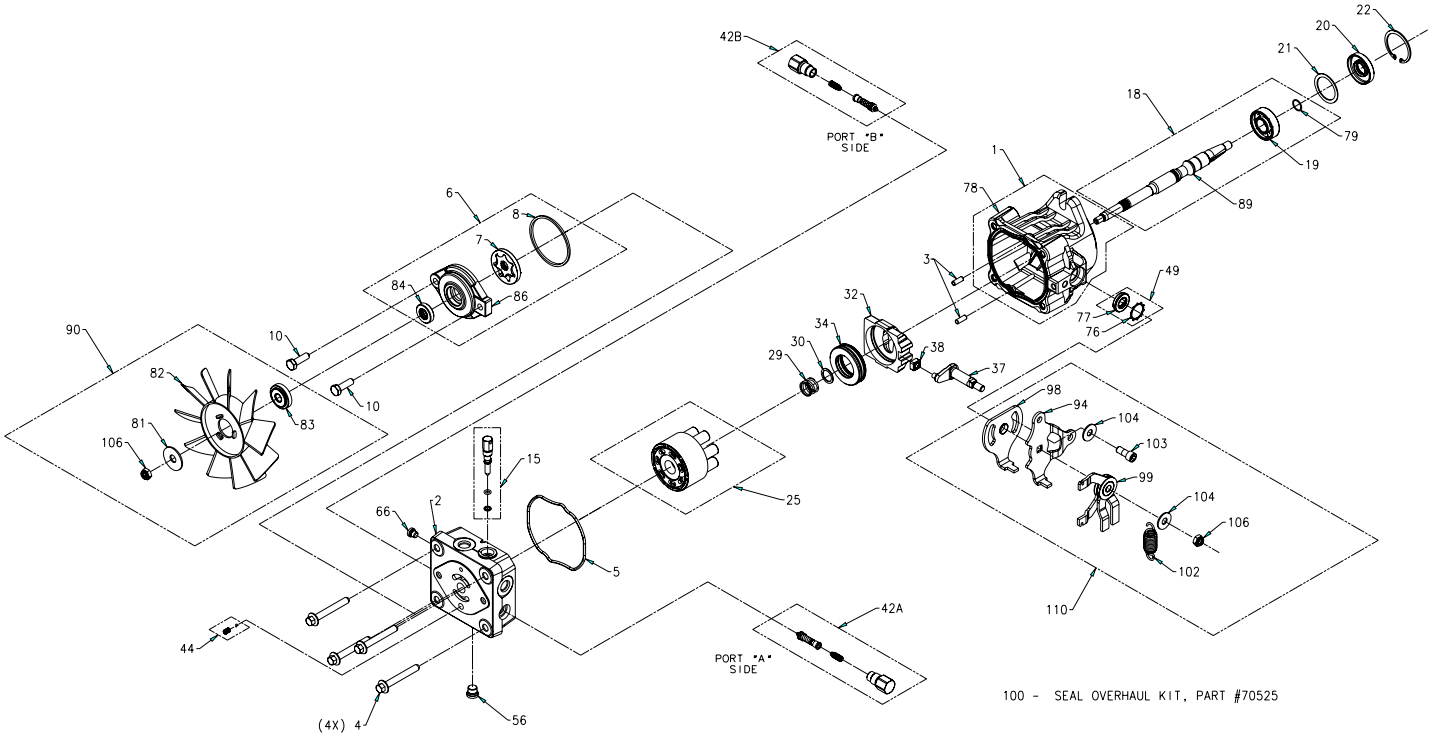

Left Hand BDP-12 Hydraulic Pump- Parts List for Figure 28

Ref. No.	Part No.	Description	Qty.
1	HG-70797	Kit, Housing	1
(78)		Housing, Pump	1
2	HG-52038	Kit, Endcap	1
(66)		Plug 9/16-18 (Metal)	1
3	HG-50641	Straight Headless Pin	2
4	HG-50969	Hex Flange Bolt M8-1.25 x 60mm Long	4
5	HG-52629	Housing, O-Ring	1
6	HG-71247	Kit, Charge Pump (STD CHG .19 ci/rev, Thru)	1
(7)		Gerotor	1
(8)		O-Ring	1
(84)		Seal	1
(86)		Housing, Charge Pump	1
10	HG-9007200-3116	Screw, 5/16-18 x 1.00 Long	2
15	HG-71248	Kit, Bypass Valve	1
18	HG-71252	Kit, Pump Shaft (15mm Tapered Keyed Thru)	1
(19)		Bearing, Ball 17 x 40 x 12	1
(79)		Ring, Ret. Wire .561 I.D.	1
(89)		Shaft, Input Tapered Keyed	1
20	HG-51161	Lip Seal 17 x 40 x 7 PTC	1
21	HG-50951	Spacer	1
22	HG-50329	Retaining Ring	1
25	HG-71170	Cylinder Block Kit	1
29	HG-2003014	Block Spring	1
30	HG-2003017	Block Thrust Washer	1
32	HG-2003087	Swashplate	1
34	HG-50551	Ball Thrust Bearing	1
37	HG-50807	Arm, Trunnion Tapered Square	1
38	HG-2000015	Slot Guide	1
42A	HG-70743	Kit, Shock Valve (200 Bar, .031 Orifice)	1
42B	HG-70743	Kit, Shock Valve (200 Bar, .031 Orifice)	1
44	HG-70402	Charge Relief Kit, (1/4 Plastic Ball & 2000029 Spring)	1
49	HG-2513043	Trunnion Seal / Retainer Kit	1
(76)		Ring, Ret. -Star Wash 1.0	1
(77)		Seal, Lip 12 x 25 x 5	1
56	HG-9005110-4400	Plug - 7/16-18 Steel (Diagnostic)	1
90	HG-71172	Kit, Fan	1
(81)		Washer, O.D. Slotted .40 x 1.55 x .06	1
(82)		Fan, 6", 10 Blade	1
(83)		Fan Hub	1
(106)		Nut, Lock, Side 5/16-24UNF-2B	1
100	HG-70525	Overhaul Seal Kit	1
(5)		O-Ring, Housing	1
(8)		O-Ring	1
(20)		Seal, Lip 17 x 40 x 7	1
(22)		Ring, Retaining	1
(76)		Ring, Retaining	1
(77)		Seal, Lip 12 x 25 x 5	1
110	HG-70794	Kit, RTN	1
(94)		Arm, Control	1
(98)		Arm, RTN	1
(99)		Assembly, RTN Bi-Directional	1
(102)		Spring, Extension (STD)	1
(103)		Screw, 5/16-24 x .75 (Patch)	1
(104)		Washer	2
(106)		Nut, Lock, Side 5/16-24UNF-2B	1

Right Hand BDP-12 Hydraulic Pump- Figure 29

PART NO. 02001101

PJ-5KCC-GG1A-XXXX SERVICE DRAWING

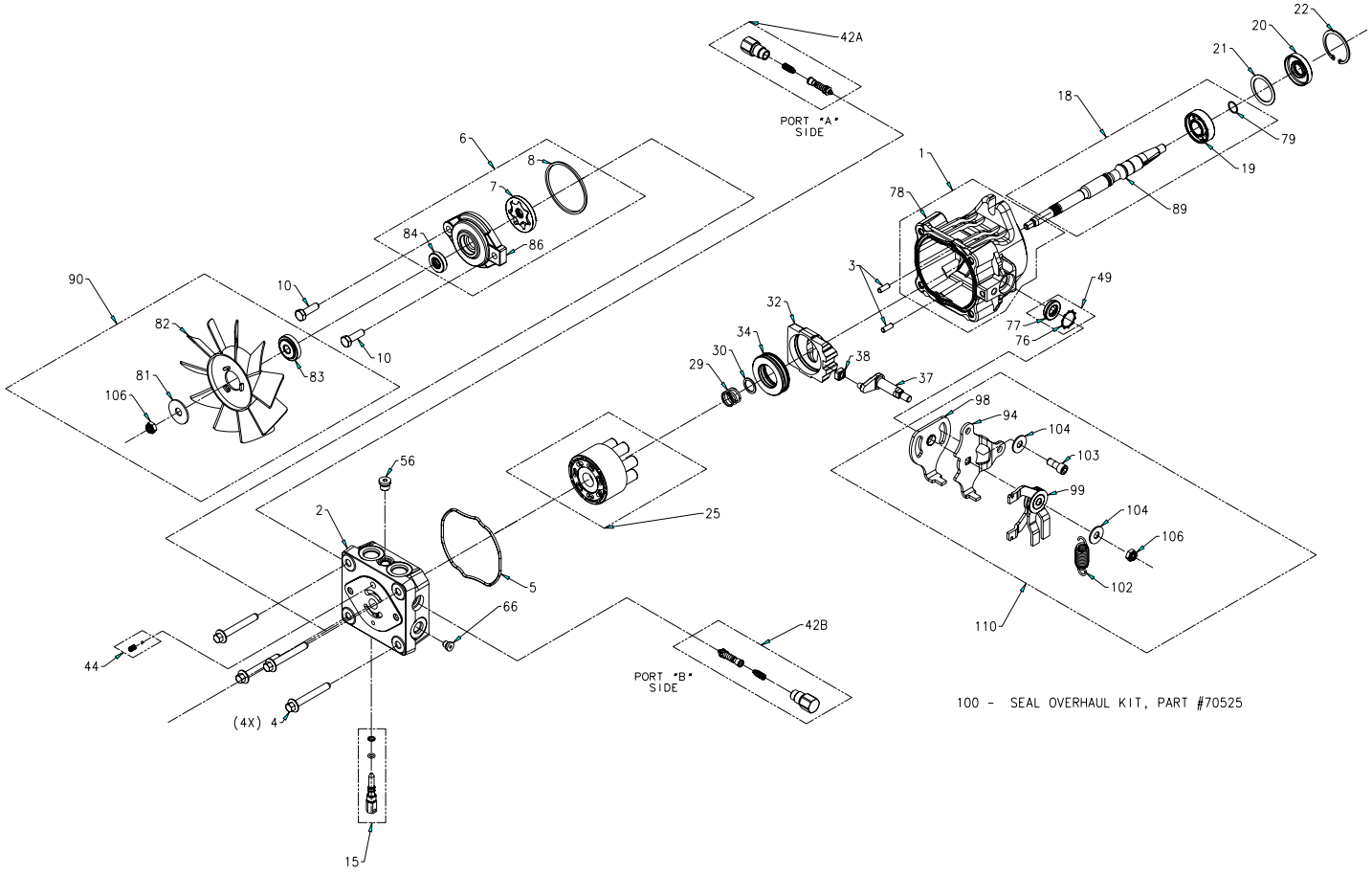

Right Hand BDP-12 Hydraulic Pump- Parts List for Figure 29

Ref. No.	Part No.	Description	Qty.
1	HG-70797	Kit, Housing	1
(78)		Housing, Pump	1
2	HG-52038	Kit, Endcap	1
(66)		Plug 9/16-18 (Metal)	1
3	HG-50641	Straight Headless Pin	2
4	HG-50969	Hex Flange Bolt M8-1.25 x 60mm Long	4
5	HG-52629	Housing, O-Ring	1
6	HG-71247	Kit, Charge Pump (STD CHG .19 ci/rev, Thru)	1
(7)		Gerotor	1
(8)		O-Ring	1
(84)		Seal	1
(86)		Housing, Charge Pump	1
10	HG-9007200-3116	Screw, 5/16-18 x 1.00 Long	2
15	HG-71248	Kit, Bypass Valve	1
18	HG-71252	Kit, Pump Shaft (15mm Tapered Keyed Thru)	1
(19)		Bearing, Ball 17 x 40 x 12	1
(79)		Ring, Ret. Wire .561 I.D.	1
(89)		Shaft, Input Tapered Keyed	1
20	HG-51161	Lip Seal 17 x 40 x 7 PTC	1
21	HG-50951	Spacer	1
22	HG-50329	Retaining Ring	1
25	HG-71170	Cylinder Block Kit	1
29	HG-2003014	Block Spring	1
30	HG-2003017	Block Thrust Washer	1
32	HG-2003087	Swashplate	1
34	HG-50551	Ball Thrust Bearing	1
37	HG-50807	Arm, Trunnion Tapered Square	1
38	HG-2000015	Slot Guide	1
42A	HG-70743	Kit, Shock Valve (200 Bar, .031 Orifice)	1
42B	HG-70743	Kit, Shock Valve (200 Bar, .031 Orifice)	1
44	HG-70402	Charge Relief Kit, (1/4 Plastic Ball & 2000029 Spring)	1
49	HG-2513043	Trunnion Seal / Retainer Kit	1
(76)		Ring, Ret. -Star Wash 1.0	1
(77)		Seal, Lip 12 x 25 x 5	1
56	HG-9005110-4400	Plug - 7/16-18 Steel (Diagnostic)	1
90	HG-71172	Kit, Fan	1
(81)		Washer, O.D. Slotted .40 x 1.55 x .06	1
(82)		Fan, 6", 10 Blade	1
(83)		Fan Hub	1
(106)		Nut, Lock, Side 5/16-24UNF-2B	1
100	HG-70525	Overhaul Seal Kit	1
(5)		O-Ring, Housing	1
(8)		O-Ring	1
(20)		Seal, Lip 17 x 40 x 7	1
(22)		Ring, Retaining	1
(76)		Ring, Retaining	1
(77)		Seal, Lip 12 x 25 x 5	1
110	HG-70794	Kit, RTN	1
(94)		Arm, Control	1
(98)		Arm, RTN	1
(99)		Assembly, RTN Bi-Directional	1
(102)		Spring, Extension (STD)	1
(103)		Screw, 5/16-24 x .75 (Patch)	1
(104)		Washer	2
(106)		Nut, Lock, Side 5/16-24UNF-2B	1

Decal Map

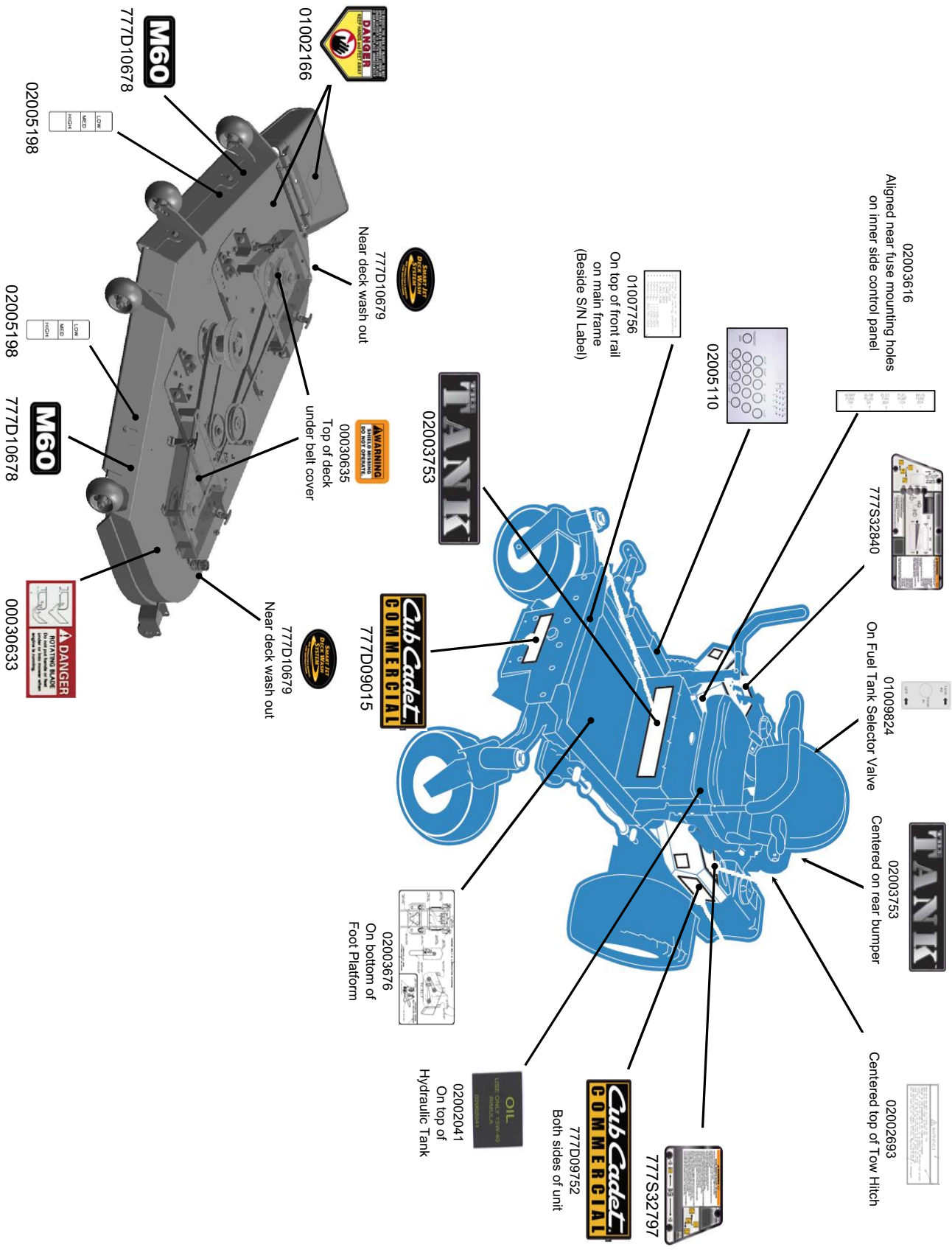

01002166
777D10678
02005198
777D10679
Near deck wash out
02005198
777D10678
00030635
Top of deck
under belt cover
00030633
777D10679
Near deck wash out
02003616
Aligned near fuse mounting holes
on inner side control panel
01007756
On top of front rail
on main frame
(Beside S/N Label)
02005110
02003753
777S32840
01009824
On Fuel Tank Selector Valve
777D09015
02003753
Centered on rear bumper
02003676
On bottom of
Foot Platform
02002693
Centered top of Tow Hitch
02002041
On top of
Hydraulic Tank
777D09752
Both sides of unit
777S32797

This Page Intentionally Left Blank

This Page Intentionally Left Blank



Cub Cadet Commercial
P.O. Box 368023
Cleveland, OH 44136

Form No. 02005222 Rev. 08-0 09/18/2007