Cub Cadet COMMERCIAL

Commercial Zero-Turn Riding Mower

Professional Turf Equipment

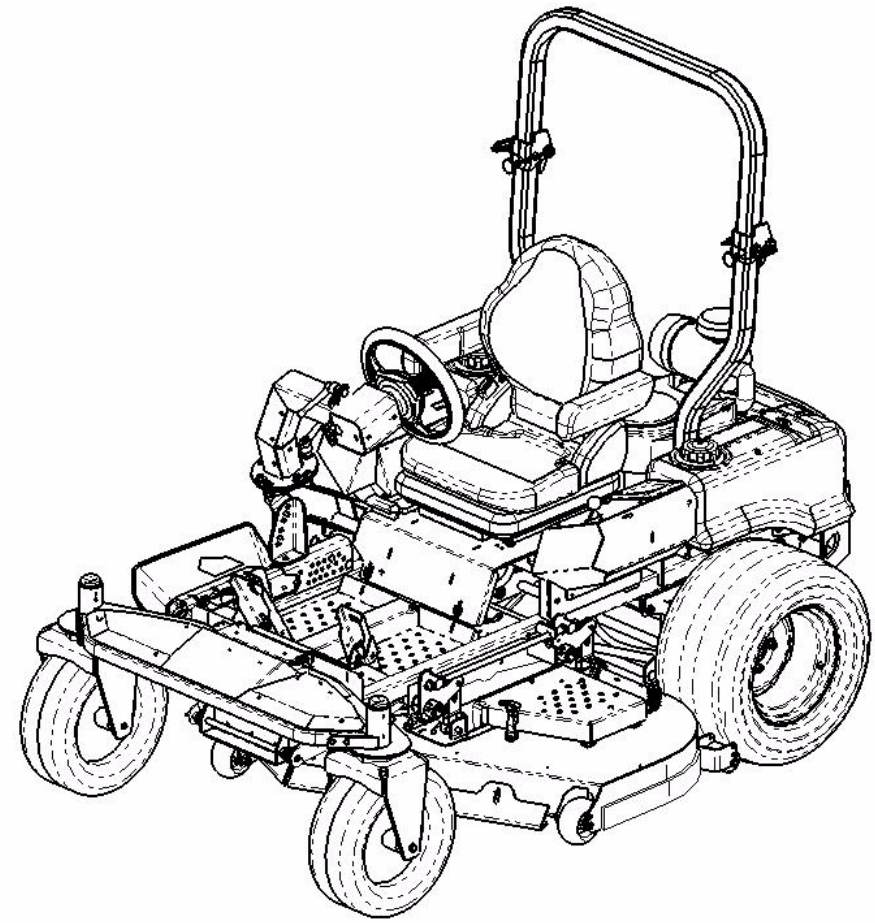

THE TANK™
S6031

THE TANK™
S7237

ILLUSTRATED PARTS LIST

TABLE OF CONTENTS

Frame Assembly 3
60" Fabricated Cutter Deck. . . . . 4 and 5
60" Spindle Assembly. . . . . 6 and 7
72" Fabricated Cutter Deck. . . . . 8 and 9
72" Spindle Assembly. . . . . 10 and 11
Hydro Hose and Pump Assembly. . . . . .12 and 13
Hydro Control Assembly. . . . . 14 and 15
Brake Assembly . . . . . 16 and 17
Fuel Tank Assembly 18
Rear Bumper 19
Front Axle Assembly. . . . . 20 and 21
Control Assembly 22
Wheel Assembly. 23
Steering Assembly 24
Seat/Floor Panel Assembly 25
31 HP Kawasaki Engine Assembly. . . . . 26 and 27
37 HP Kawasaki Engine Assembly. . . . . 28 and 29
Electrical Assembly . . . . . 30 and 31
60" Lift Assembly . . . . . 32 and 33
72" Lift Assembly . . . . . 34 and 35
Speed Control Assembly 36
Brake Pedal Assembly 37
Decal Map 38

MODELS LISTED IN THIS MANUAL

THE TANK™ S6031 53AI8DU6050

THE TANK™ S7237 53AI8DU8050

Frame Assembly- Figure 1 and Parts List

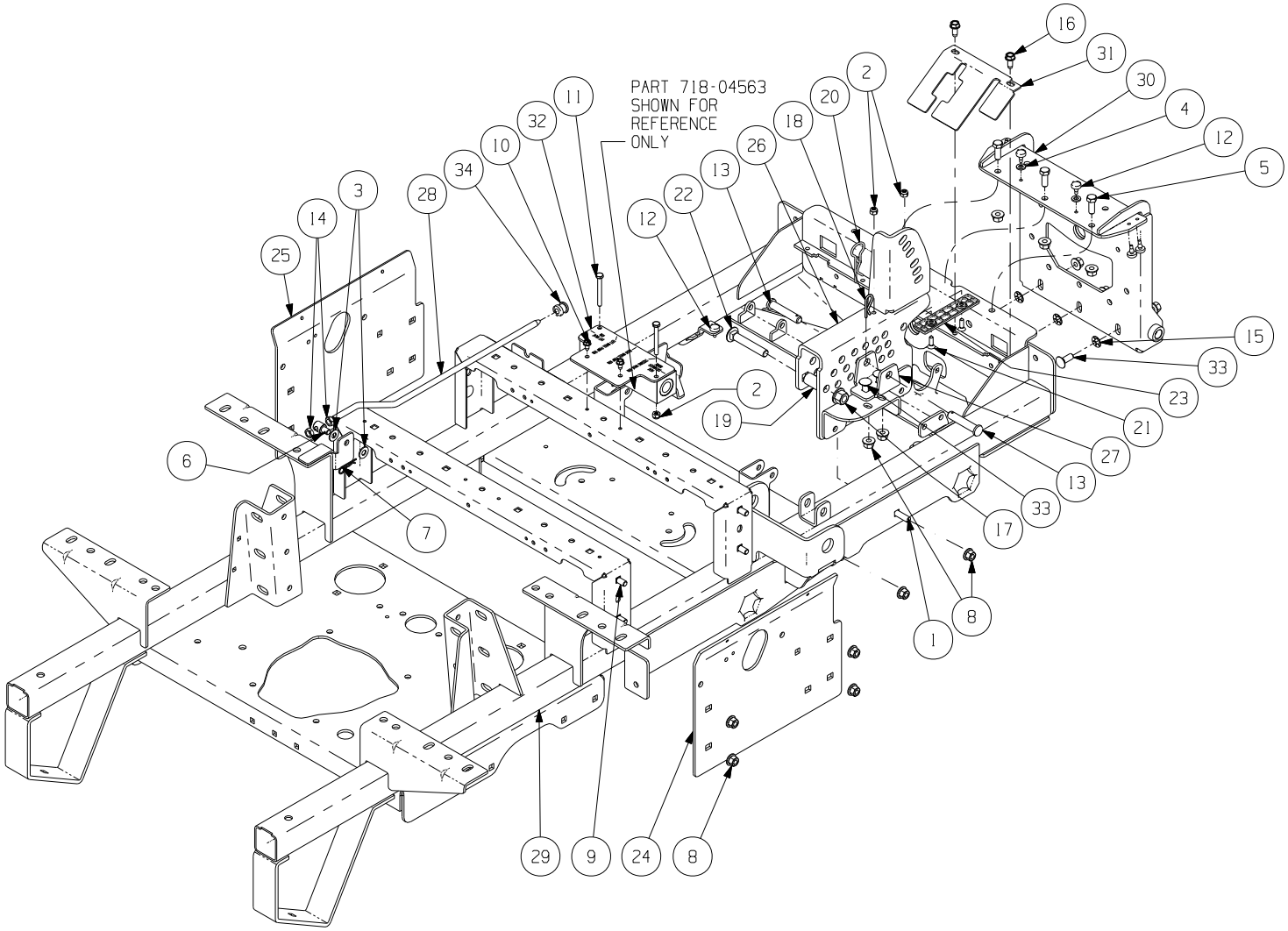

GD: 02003108-08/13/08

Ref. No.	Part No.	Description	Qty.	Ref. No.	Part No.	Description	Qty.
1	00005765	Carriage Bolt, 3/8-16 x 1.25	2	18	02000673	Hair Pin	1
2	00012152	Lock Nut w/Nylon Insert	4	19	02002655	Spacer, .51 ID x .75 OD x 1.40	1
3	00012158	Washer, 3/8	2	20	02003074	HitchPin, .120 Dia. x 3.0	1
4	00012169	Washer, 5/16	2	21	02003505	Flat Head Cap Screw, 1/4-20 x .75	2
5	00012171	Hex Cap Screw, 3/8-16 x 1.00	3	22	02003563	Carriage Bolt, 1/2-13 x 3.00	1
6	00021943	Swivel Joint	1	23	02003749	Wear Plate, 1.25 x 5.00	1
7	00021956	Hair Pin, 3/8"-1/2"	1	24	02004097	Side Panel, RH	1
8	00022560	Hex Nut, 3/8-16 Flange Lock	18	25	02004559	Side Panel, LH	1
9	01000372	Carriage Bolt, 3/8-16 x .75 Long	8	26	02005355	Lift Index Bracket	1
10	01000628	Screw, TT, 1/4-20, 0.5, Hex Index Washer	2	27	02005357	Cylinder Mount Bracket	1
11	01000857	HHCS, 1/4-20 x 2.25	2	28	02005424	Seat Rod	1
12	01001170	Rubber Bumper, .62 OD x .22 Thick	8	29	603-04667	Frame Assembly	1
13	01001776	Clevis Pin, .500 Dia. x 2.50 Lg.	2	30	603-04668	Bracket Assembly, Frame, Front	1
14	01002511	Nut, 3/8-16, Jam	2	31	703-06746	Foot Pedal Shield	1
15	01008225	Push Retainer, 3/8	3	32	703-07098	Bracket, Manifold	1
16	01008620	Self Tapping Screw, 5/16-18 x 0.750	2	33	710-3168	Carriage Bolt, 3/8-16 x 1	5
17	01010119	Nut, 1/2-13, Flangelock	1	34	735-04159	Grommet, .38 ID x .75 OD x .75	1

60" Fabricated Cutter Deck - Figure 2

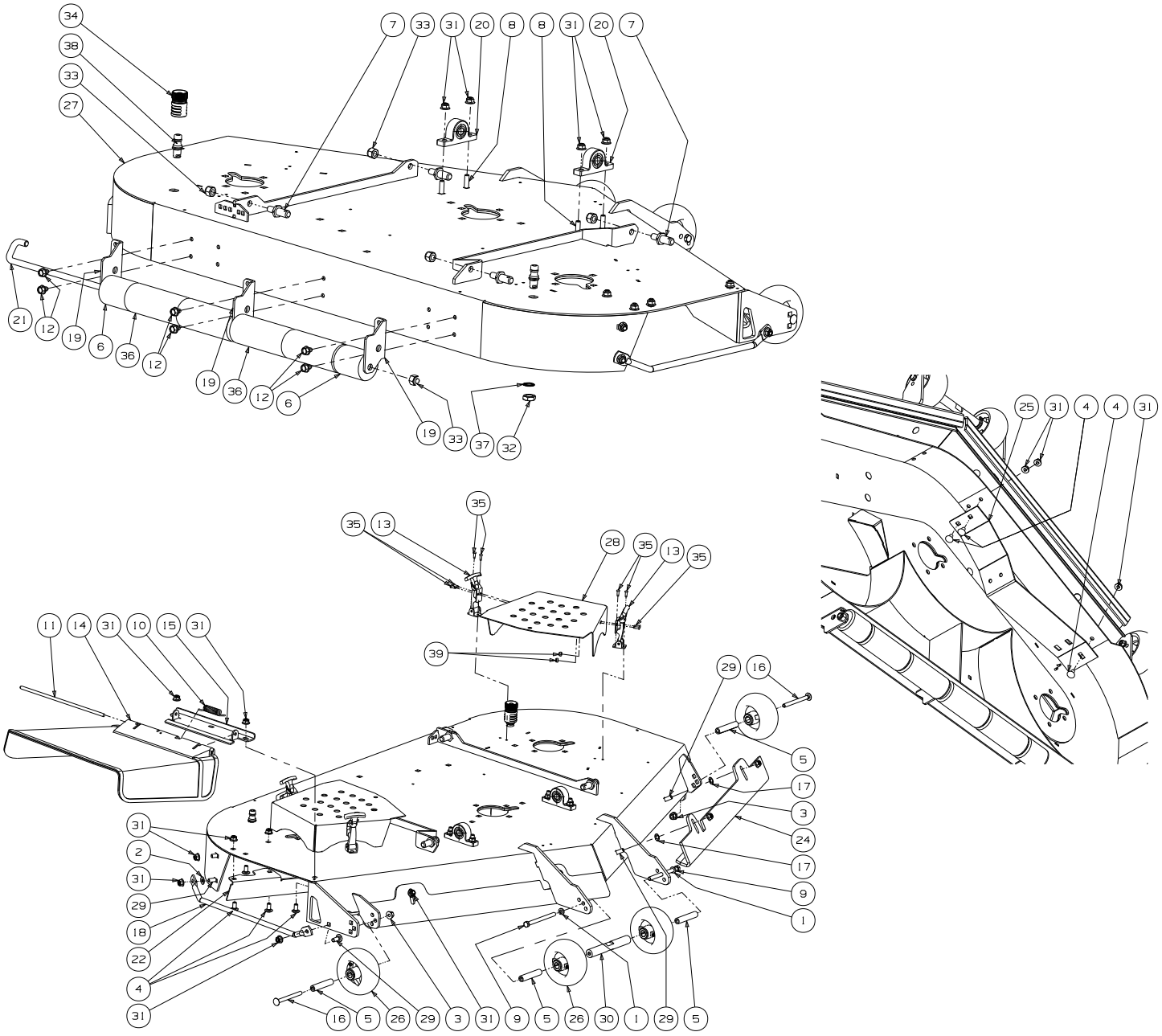

GD: 853-000009-11/14/08

60" Fabricated Cutter Deck - Parts List for Figure 2

Ref. No.	Part No.	Description	Qty.
1	00012157	Lock Washer, 3/8	2
2	00012158	Washer, 3/8	1
3	00022560	Flange Lock Hex Nut, 3/8-16	2
4	01000372	Carriage Bolt, 3/8-16 x .75 Lg.	8
5	01000398	Wheel Spacer	4
6	01001169	Grass Catcher Roller	2
7	01001745	Pin, 5/8 Dia. x 1.2 Lg.	4
8	01002010	Carriage Bolt, 3/8-16 x 1	4
9	01002539	Hex Cap Screw, 3/8-16 x 4.50	2
10	01003253	Torsion Spring, 0.4ID x 2.16Lg	1
11	01003254	Chute Deflector Rod	1
12	01004304	Hex Index Washer Screw, 3/8-16, .5	6
13	01005869	T-Handle Latch Draw	4
14	01006693	Chute Deflector	1
15	01006748	Chute Deflector Bracket	1
16	01008049	Carriage Bolt, 3/8-16 x 4.00	2
17	01008225	Push Retainer	4
18	01008644	Finger Guard	1
19	01008790	Grass Catcher Roller Bracket	3
20	02000109	Pillow Block	2
21	02002800	J-Hook w/ Threaded Roller	1
22	02005195	Chute Baffle	1
23	02005200	Right Hand Front Adjustment Skirt	1
24	02005201	Left Hand Front Adjustment Skirt	1
25	02005694	Baffle, 60" Adjustment	1
26	634-3159	Complete Wheel, 5.00 Dia.	4
27	680-00024	60" Deck Assembly	1
28	703-06871	Deck Belt Cover	2
29	710-3168	Carriage Bolt, 3/8-16 x 1.00	6
30	711-05159	Ball Wheel Mounting Shaft	1
31	712-04065	Lock Nut, Nylon Insert, 3/8-16	18
32	712-0641	Hex Nut, M16-1.5	2
33	712-3083	Lock Nut, Nylon Insert, 1/2-13	5
34	721-04041	Water Nozzle Adaptor	1
35	00017778	Phillips Head Screw, 10-32	16
36	731-3005	Front Roller	4
37	736-0760	Lock Washer, 17 x 23.8 x 1.95	2
38	737-04003D	Deck Water Nozzle	2
39	00014608	Lock Nut, Nylon Insert, 10-32	16

60" Fabricated Deck Spindle Assembly - Figure 3

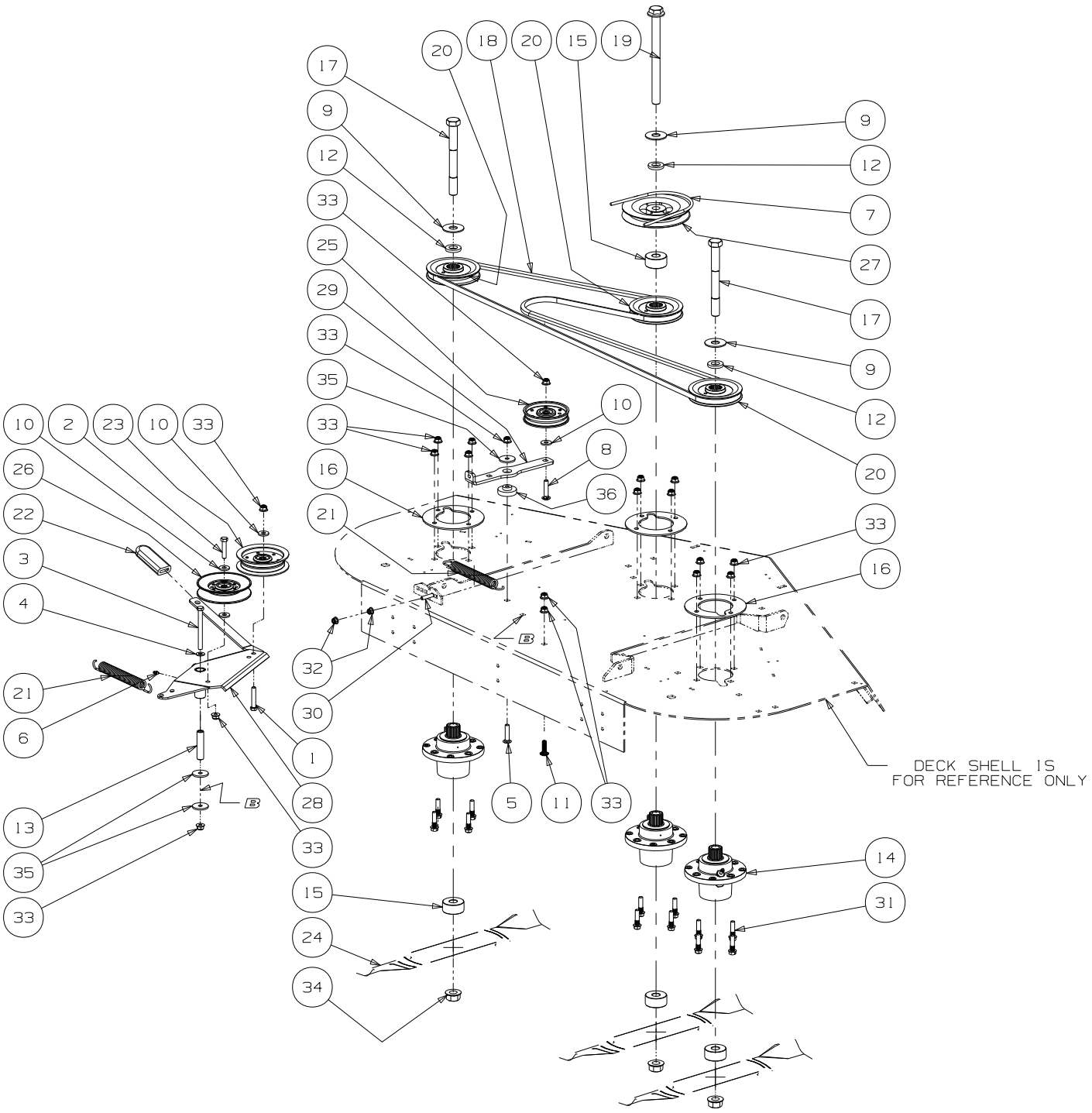

GD: 853-000008-11/25/08

60" Fabricated Deck Spindle Assembly - Parts List for Figure 3

Ref. No.	Part No.	Description	Qty.
1	00002528	Hex Cap Screw, 3/8-16 x 2.00	1
2	00008495	Hex Cap Screw, 3/8-16 x 1-3/4	1
3	00011925	Hex Cap Screw, 3/8-16 x 4.00	1
4	00012158	Washer, 3/8	1
5	00030276	Carriage Bolt, 3/8-16 x 1-1/2	1
6	00060078	Grease Fitting, 1/4-28 x 3/16	1
7	00068079	V-Belt, B-Section, BK90	1
8	01000364	Hex Carriage Screw, 3/8-16, 1.75	1
9	01000392	Flat Washer, .781 ID 2.00 OD, .105	3
10	01000723	Flat Washer, .406 ID, 1.0 OD, .105	4
11	01002010	Carriage Screw, 3/8-16 x 1.25	1
12	01003123	Spacer .812 ID x .268 LG	3
13	01003245	Spacer, .39 ID x .625 OD x 2.75	1
14	01003532	Aluminum Spindle Assembly	3
15	01004415	Spacer, .760 ID x 2.00 OD x 1.1	4
16	01004478	Aluminum Spindle Support Plate	3
17	01005213	Hex Cap Screw, 3/4-16, 7.00	2
18	01005376	V-Belt, A Section x 122.3	1
19	01005388	Hex Cap Screw, 3/4-16, 9.00	1
20	01005616	V-Pulley, 5.00 OD	3
21	02003712	Extension Spring, .94 x OD x 7.57	2
22	02003740	Grip, 1.0 x 3.2 x .25	1
23	02004447	Idler Pulley, 4.06 OD	1
24	02005019	Hi-Lift Blade, 21.0, 0.756 ID	3
25	02005077	Flat Pulley with Flanges	1
26	02005079	Idler Pulley, 5.06 OD	1
27	02005097	V-Pulley, 6.38 OD x .760 ID	1
28	02005509	Idler Arm Assembly includes:	1
	01000308	Bearing	2
29	703-07010	Idler Arm	1
30	710-0262	Carriage Bolt, 5/16-18 x 1.50	1
31	710-04829	Bolt, 3/8-16 x 1.5	12
32	712-04063	Nut, 5/16-18, Nylon Flange Lock	2
33	712-04065	Nut, 3/8-16, Nylon Flange Lock	19
34	712-3078	Flange Hex Nut, 3/4-16	3
35	736-0227	Washer, .390 x 1.500 x .134	3
36	738-04376	Shoulder Screw, .854 x .280	1

72" Fabricated Cutter Deck - Figure 4

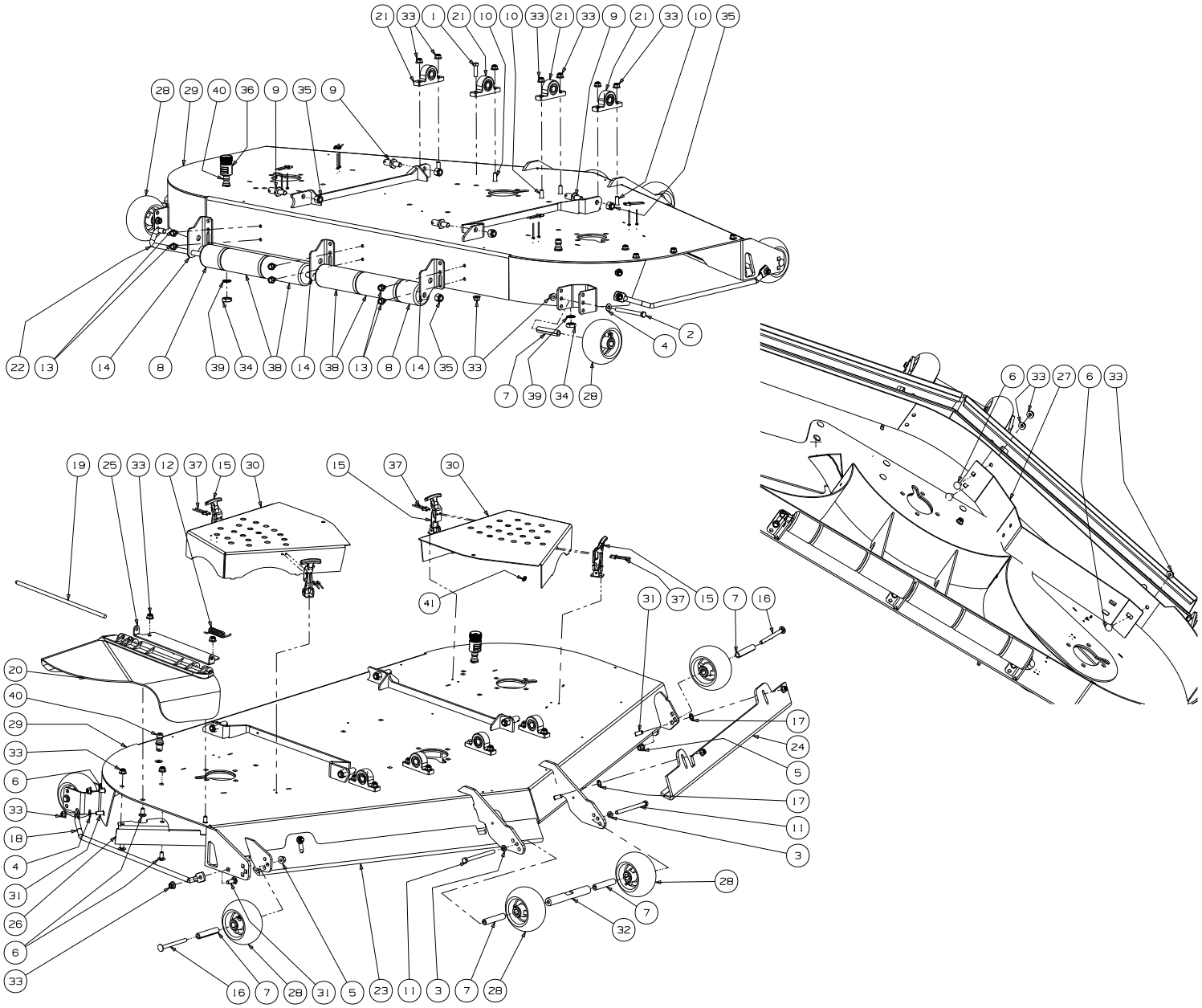

GD: 853-000007-11/14/08

72" Fabricated Cutter Deck - Parts List for Figure 4

Ref. No.	Part No.	Description	Qty.
1	00011444	Hex Cap Screw, 3/8-16, 1.25	1
2	00011925	Hex Cap Screw, 3/8-16, 4.00	2
3	00012157	Lock Washer, 3/8	2
4	00012158	Flat Washer, 3/8	3
5	00022560	Flange Lock Hex Nut, 3/8-16	2
6	01000372	Carriage Bolt, 3/8-16 x .75 Lg.	8
7	01000398	Wheel Spacer	6
8	01001169	Grass Catcher Roller	2
9	01001745	Pin, 5/8 Dia. x 1.2 Lg.	4
10	01002010	Carriage Screw, 3/8-16 x 1.25	7
11	01002539	Hex Cap Screw, 3/8-16 x 4.50	2
12	01003253	Torsion Spring, 0.4ID x 2.16Lg	1
13	01004304	Hex Index Washer Screw, 3/8-16, .5	6
14	01004707	Deck Roller Mount Bracket	3
15	01005869	T-Handle Latch Draw	4
16	01008049	Carriage Bolt, 3/8-16 x 4.00	2
17	01008225	Push Retainer	4
18	01008526	Finger Guard	1
19	01009102	Pin, .375 x 14.06	1
20	01009705	Chute Deflector	1
21	02000109	Pillow Block, Steel	4
22	02002800	J-Hook w/ Threaded Roller	1
23	02004868	Right Hand Front Adjustment Skirt	1
24	02004869	Left Hand Front Adjustment Skirt	1
25	02004874	Chute Deflector Bracket	1
26	02005195	Chute Baffle	1
27	02005696	Baffle, 72" Adjustment	1
28	634-3159	Complete Wheel, 5.00 Dia.	6
29	680-00023	72" Deck Assembly	1
30	703-06872	Deck Belt Cover	2
31	710-3168	Carriage Bolt, 3/8-16 x 1	6
32	711-05159	Ball Wheel Mounting Shaft	1
33	712-04065	Flange Lock Hex Nut, 3/8-16	24
34	712_0641	Hex Nut, M16-1.5	2
35	712-3083	Lock Nut, Nylon Insert, 1/2-13	5
36	721_04041	Water Nozzle Adaptor	1
37	00017778	Phillips Head Screw, #10-32 x 1/2	16
38	731-3005	Front Roller	4
39	736_0760	Lock Washer, 17 x 23.8 x 1.95	2
40	737_04003D	Deck Water Nozzle	2
41	00014608	Lock Nut, Nylon Insert, #10-32	16

72" Fabricated Deck Spindle Assembly - Figure 5

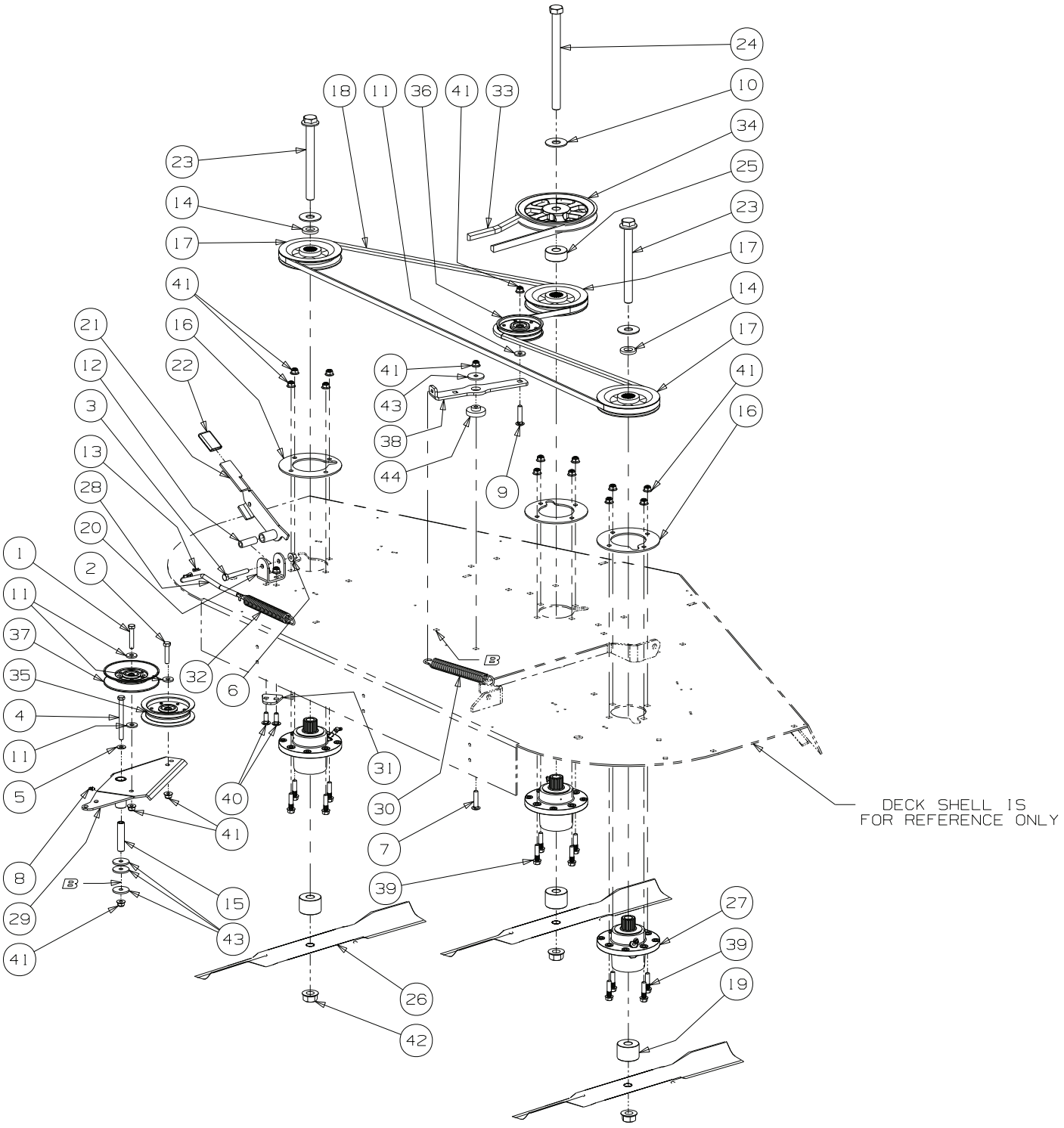

GD: 853-000006-01/15/09

72" Fabricated Deck Spindle Assembly - Parts List for Figure 5

Ref. No.	Part No.	Description	Qty.
1	00002528	Hex Cap Screw, 3/8-16 x 2.00	1
2	00008495	Hex Cap Screw, 3/8-16 x 1-3/4	1
3	00011861	Hex Cap Screw, #/8-16 x 2-1/2	1
4	00011925	Hex Cap Screw, 3/8-16 x 4.00	1
5	00012158	Washer, 3/8	1
6	00022560	Flange Lock Hex Nut, 3/8-16	1
7	00030276	Carriage Bolt, 3/81-6 x 1-1/2	1
8	00060078	Grease Fitting, 1/4-28 x 3/16	1
9	01000364	Hex Carriage Screw, 3/8-16, 1.75	1
10	01000392	Flat Washer, .781 ID 2.00 OD, .105	3
11	01000723	Flat Washer, .406 ID, 1.0 OD, .105	4
12	01002751	Spacer, .39 ID x .63 OD x 1.75	1
13	01002771	Cotter Pin, .072 x 1.12 Long	2
14	01003123	Spacer .812 ID x .268 LG	2
15	01003245	Spacer, .39 ID x .625 OD x 2.75	1
16	01004478	Aluminum Spindle Support Plate	3
17	01007499	V-Pulley, 5.75 OD	3
18	01007937	V-Belt, B Section x 124.0 Lg	1
19	02000454	Spacer, .760 ID x 2.00 OD x 1.28	3
20	01008222	Tension Idler U-Bracket	1
21	01008247	Handle Tension Weldment	1
22	01008270	Tension Idler Handle Grip	1
23	01008542	Hex Cap Screw, 3/4-16, 7.50	2
24	01008543	Hex Cap Screw, 3/4-16, 9.50	1
25	750-05184	Spacer, .76 ID x 2.0 OD x .790	1
26	02000568	Bahia Blade, 25.0, .756 ID	3
27	02000920	Aluminum Spindle Assembly	3
28	02001574	Spring Tension Rod	1
29	02003489	Idler Arm Assembly includes:	1
	01000308	Bearing Sleeve	2
30	02003712	Extension Spring, .94 x OD x 7.57	1
31	02004063	Adaptor Plate	1
32	02004069	Extension Spring, .94 OD x 7.72 Lg	1
33	02004377	V-Belt, B Section x 107.0	1
34	02004379	V-Pulley, 7.450 OD x .750 Bore, Cast	1
35	02004447	Idler Pulley, 4.06 OD	1
36	02005077	Idler Pulley, 4.06 Dia.	1
37	02005079	Idler Pulley, 5.06 Dia.	1
38	703-07010	Idler Arm	1
39	710-04829	Bolt, 3/8-16 x 1.5	12
40	710-3168	Carriage Bolt, 3/8-16 x 1	2
41	712-04065	Nut, 3/8-16, Nylon Flange Lock	19
42	712-3078	Flange Hex Nut, 3/4-16	3
43	736-0227	Washer, .390 x 1.500 x .134	4

Hydro Hose and Pump Assembly - Figure 6

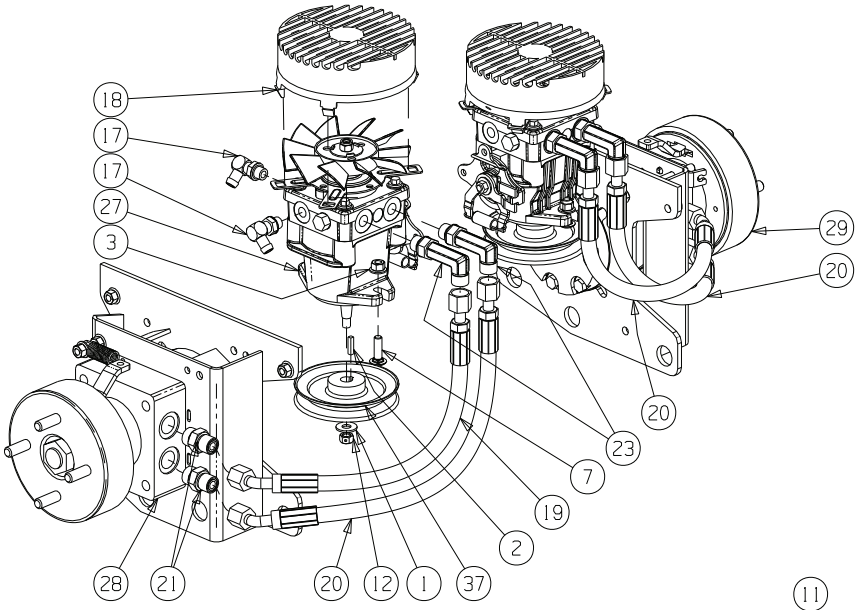

Pump & Motor Systems

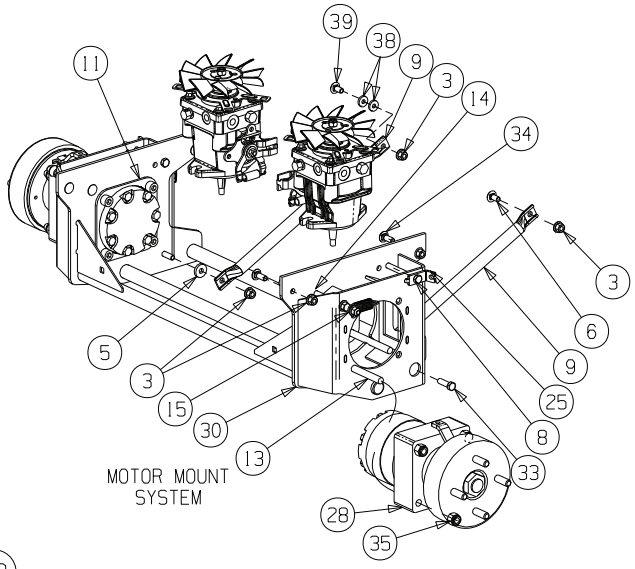

Motor Mount Systems

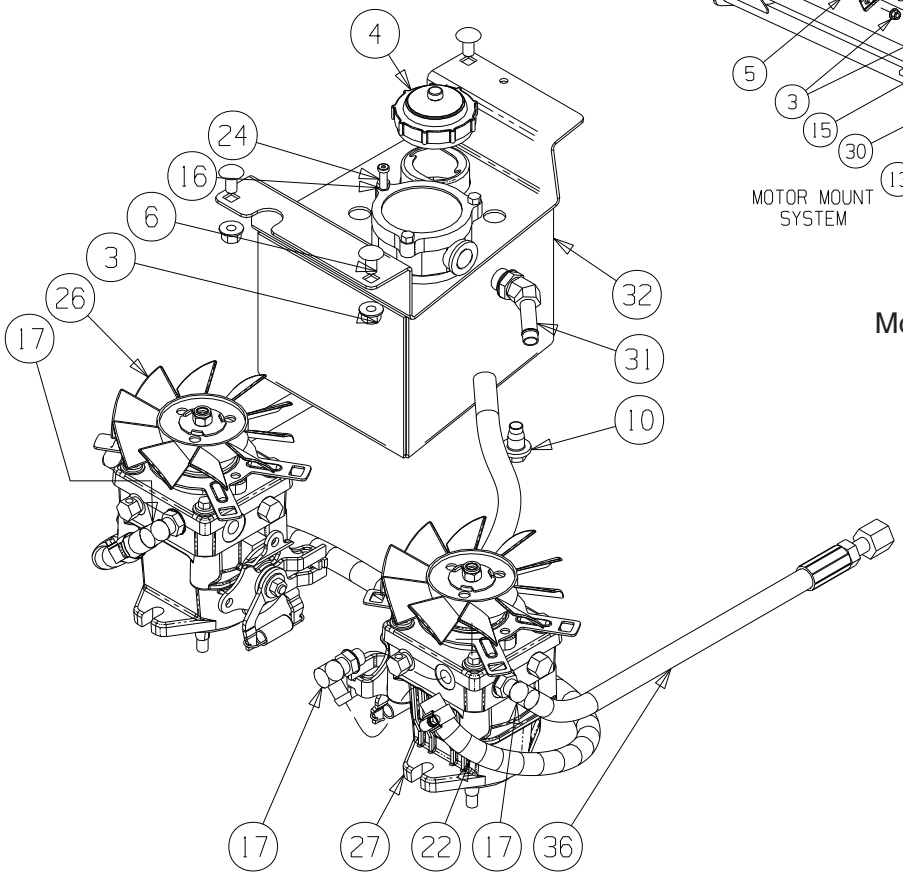

Pilot &Drain Systems

GD: 853-000042-01/15/09

Hydro Hose and Pump Assembly- Parts List for Figure 6

Ref. No.	Part No.	Description	Qty.
1	00006168	Flat Washer, 3/8	2
2	00020628	Key, 3/16" x 7/8"	2
3	00022560	Flange Lock Hex Nut, 3/8-16	21
4	00030261	Cap, Hydro Oil Tank	1
5	00083192	Idler Washer	2
6	01000372	Carriage Bolt, 3/8-16 x .75 LG.	4
7	01002010	Carriage Screw, 3/8-16 x 1.25	4
8	01002539	Hex Cap Screw 3/8-16 x 4.50	2
9	01002593	Strut Frame	2
10	01004192	Oil Pan Drain Plug w/ Seal	1
11	01006948	Hydro Wheel Motor Backup Plate	2
12	01007309	Hex Nut, 3/8-24	2
13	01008449	Socket Head Capscrew, 1/2-13; 6-1/2	8
14	01009906	Carriage Bolt, 3/8-16 x 5.00	2
15	02000401	Spring Extension, .740 OD x 2.656	2
16	02000841	Socket Low Head Cap Screw, 1/4-20 x 0.75	2
17	02001160	Fitting Elbow, 9/16 x 1/2	4
18	02001169	Fan Pump Shroud	2
19	02001178	Short Pressure Hose Assembly	1
20	02001179	Long Pressure Hose Assembly	3
21	02001715	Adaptor Fitting, 8 x 10	4
22	02001872	Hose Assembly, Pilot inlcudes:	1
	02001175	Tee Fitting, 1/2	1
	02002392	Hose Clamp, 1/2	3
	--	Fuel Hose, .50 ID x .75 OD (in inches)	43
23	02002003	Adaptor, 8 x 8	4
24	02002257	Hydraulic In-Tank Filter includes:	1
	02002258	Replacement Filter	1
25	02002899	Rear Cable Mounting Bracket	2
26	02003380	Hydro Pump, BDP-12, LH	1
	01009631	Kit, Fan	1
27	02003381	Hydro Pump, BDP-12, RH	1
	01009631	Kit, Fan	1
28	02004441	Hydro Motor, Right Hand Assembly w/ Brake & Drum	1
29	02004442	Hydro Motor, Left Hand Assembly w/ Brake & Drum	1
30	02004648	Hydro Motor Frame Assembly	1
31	02005160	Fitting, 3/4 ORB x 1/2 Tube, 45 degree	1
32	680-00056	Hydraulic Tank Assembly	1
33	710-3005	Hex Cap Screw, 3/8 -16 x 1.25	2
34	710-3168	Carriage Bolt, 3/8-16 x 1	4
35	712-3083	Washer lock 3/8 zinc	8
36	727-04284	Hose Assembly, Wheel Pump to Manifold	2
37	756-04381	Hydro Pump Pulley	2
38	00012157	Lock Washer, 3/8	2
39	01000643	Carriage Bolt, 3/8-16 x 1.00 LG.	1

NOTE: Lubricant, 02002058 Quarts, 2.00

Hydro Control Assembly - Figure 7

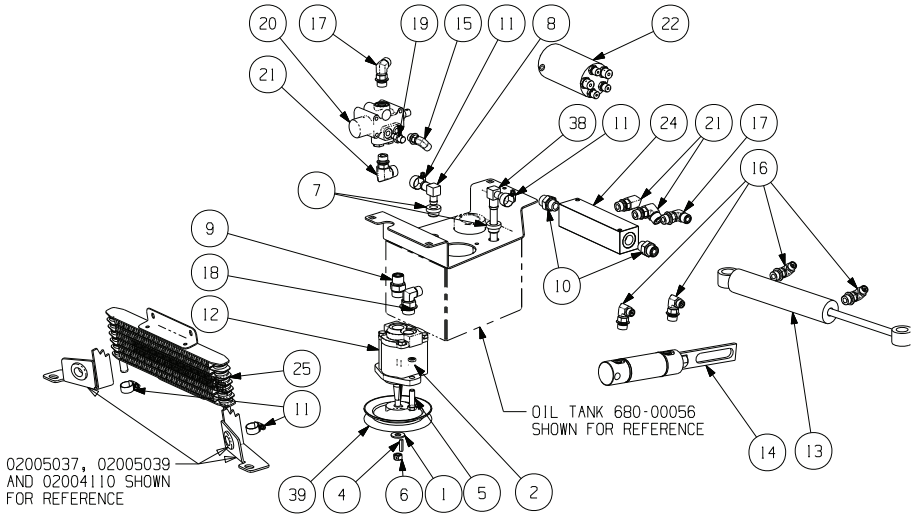

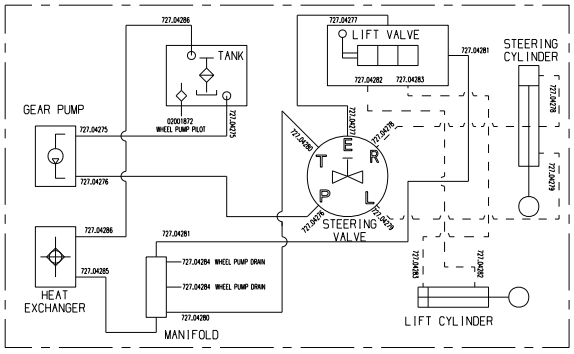

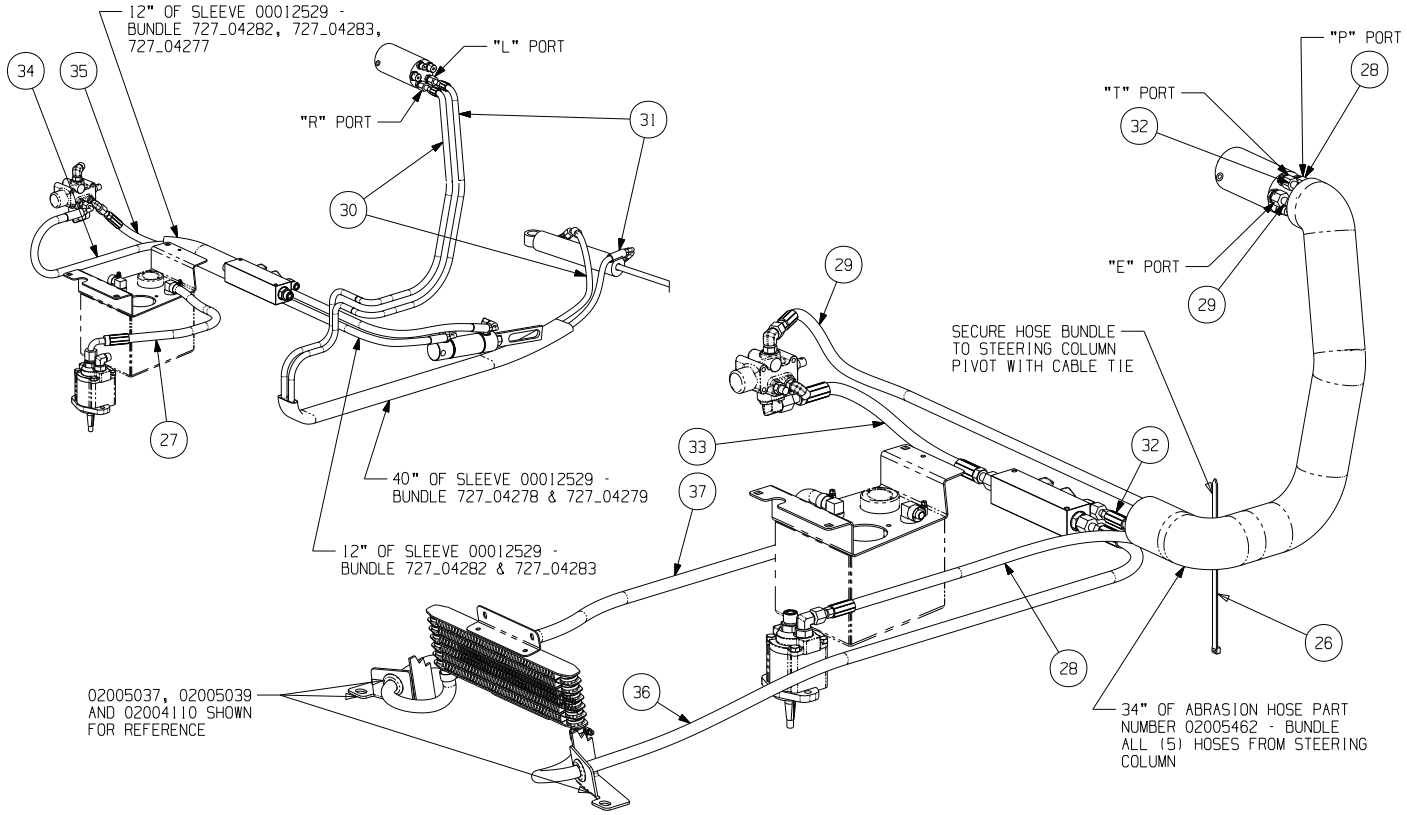

GD: 853-000043-01/08/09

Hydro Control Assembly- Parts List for Figure 7

Ref. No.	Part No.	Description	Qty.
1	00006168	Flat Washer, 3/8	1
2	00012173	Nut, 3/8-16, Nylock	2
3	00012529	Reel Return Line Sleeve, 1.59	3
4	00020628	Key, 3/16" x 7/8"	1
5	01000369	HHCS, 3/8-16 x 1.25	2
6	01007309	Hex Nut, 3/8-24	1
7	02000296	Grommet Fitting, .54 ID x .78 OD	2
8	02001151	Fitting Elbow Spur, 5/8 x 1/2	1
9	02001715	Adaptor Fitting, 8 x 10	1
10	02001975	Adaptor, 8 ORS x 8 ORB	2
11	02002392	Hose Clamp, 1/2	4
12	02003193	Pump, 3.5 Cu. Cm/Rev	1
13	02003368	Steering Cylinder	1
14	02003930	Hydraulic Cylinder, 1.50 x 2.75	1
15	02004642	Elbow Fitting, 40RB - 40RS, FS68001-04-04	1
16	02004643	Elbow Fitting, 40RB - 60RS, FS68001-04-06	4
17	02004644	Elbow Fitting, 60RB - 60RS, FS68001-06-06	2
18	02004645	Elbow Fitting, 60RS - 80RB, FS6801-06-08	1
19	02004687	Fitting, 40RB - 40RS, 4315 x 4	1
20	02004696	Hydraulic Lift Valve, Dual Action	1
21	02004837	Elbow Fitting, 80RS - 60RB, FS6801-08-06	3
22	02005325	Steering Valve	1
23	02005462	Anti Abrasion Sleeve	1
24	718-04563	Manifold	1
25	718-3132	Radiator	1
26	726-0230	Cable Tie, 36.00 Long	1
27	727-04275	Hose Assembly, Tank to Pump	1
28	727-04276	Hose Assembly, Pump to Steering Valve	1
29	727-04277	Hose Assembly, Steering Valve to Lift Valve	1
30	727-04278	Hose Assembly, Steering Valve to Steering Extension	1
31	727-04279	Hose Assembly, Steeering Valve to Steering Right Control	1
32	727-04280	Hose Assembly, Steering Valve to Manifold	1
33	727-04281	Hose Assembly, Lift Valve to Manifold	1
34	727-04282	Hose Assembly, Lift Valve to Cylinder Right Control	1
35	727-04283	Hose Assembly, Lift Valve to Cylinder Extension	1
36	727-04285	Hose Assembly, Manifold to Exchanger	1
37	727-04286	Hose Assembly, Exchanger to Tank	1
38	737-04260	Elbow, 1/2 x 5/8 Barb w/ Straw	1
39	756-04381	Hydro Pump Pulley	1

Brake Assembly - Figure 8

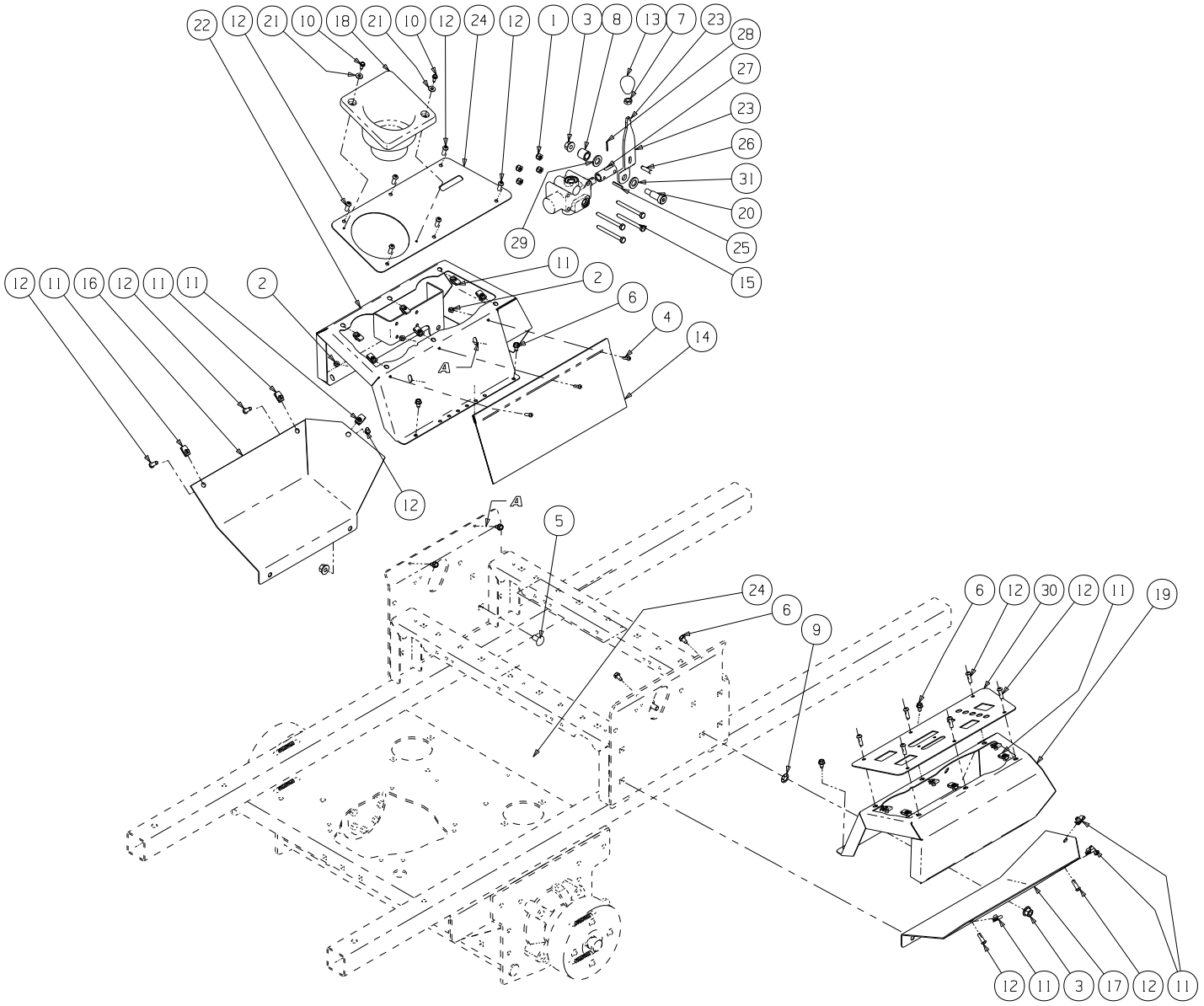

GD: 02003116-09/25/08

Brake Assembly - Parts List for Figure 8

Ref. No.	Part No.	Description	Qty.
1	00012152	Lock Nut w/Nylon Insert	4
2	00014608	Lock Nut, Nylon Insert, 10-32	3
3	00022560	Flange Lock Hex Nut, 3/8-16	3
4	00030906	Phillips Head Machine Screw, 10-32 x 5/8	3
5	01000372	Carriage Bolt, 3/8-16 x .75	2
6	01000628	Screw, TT, 1/4-20, 0.5, Hex Index Washer	8
7	01002511	Nut, 3/8-16, Jam	1
8	01004546	Spacer, .510 x .75 x .700	1
9	01008225	Push Retainer, 3/8	2
10	01008531	Screw, #10-32 x 0.500	2
11	01008539	U-Nut, 1/4-20	18
12	01009362	Capscrew, 1/4-20 x .750	18
13	01009369	Knob, 3/8-16	1
14	02000362	Bag, Debris Storage	1
15	02000925	HHCS, 1/4-20 x 2.75	4
16	02002785	Lower Panel, LH	1
17	02002786	Lower Panel, RH	1
18	02002874	Cup Holder	1
19	02002970	Control Panel, RH	1
20	02003603	Shoulder Bolt, 1/2 x 1.00, 3/8-16	1
21	02003725	Washer, 3/16	2
22	02004136	Control Panel, LH	1
23	703-07179	Lift Valve Bracket	1
24	02004142	Control Panel Cover, LH	1
25	02004622	Pin	1
26	711-04214	Pin, .25Dia. x .9375 LG	1
27	711-1614	Link	1
28	714-0127	Cotter Pin, 1/16 x .75	1
29	01000873	Washer, .536 ID x .930 OD x .05	1
30	746-04544	Control Panel Cover, RH	1
31	736-0253	Washer	1

Fuel Tank Assembly - Figure 9 and Parts List

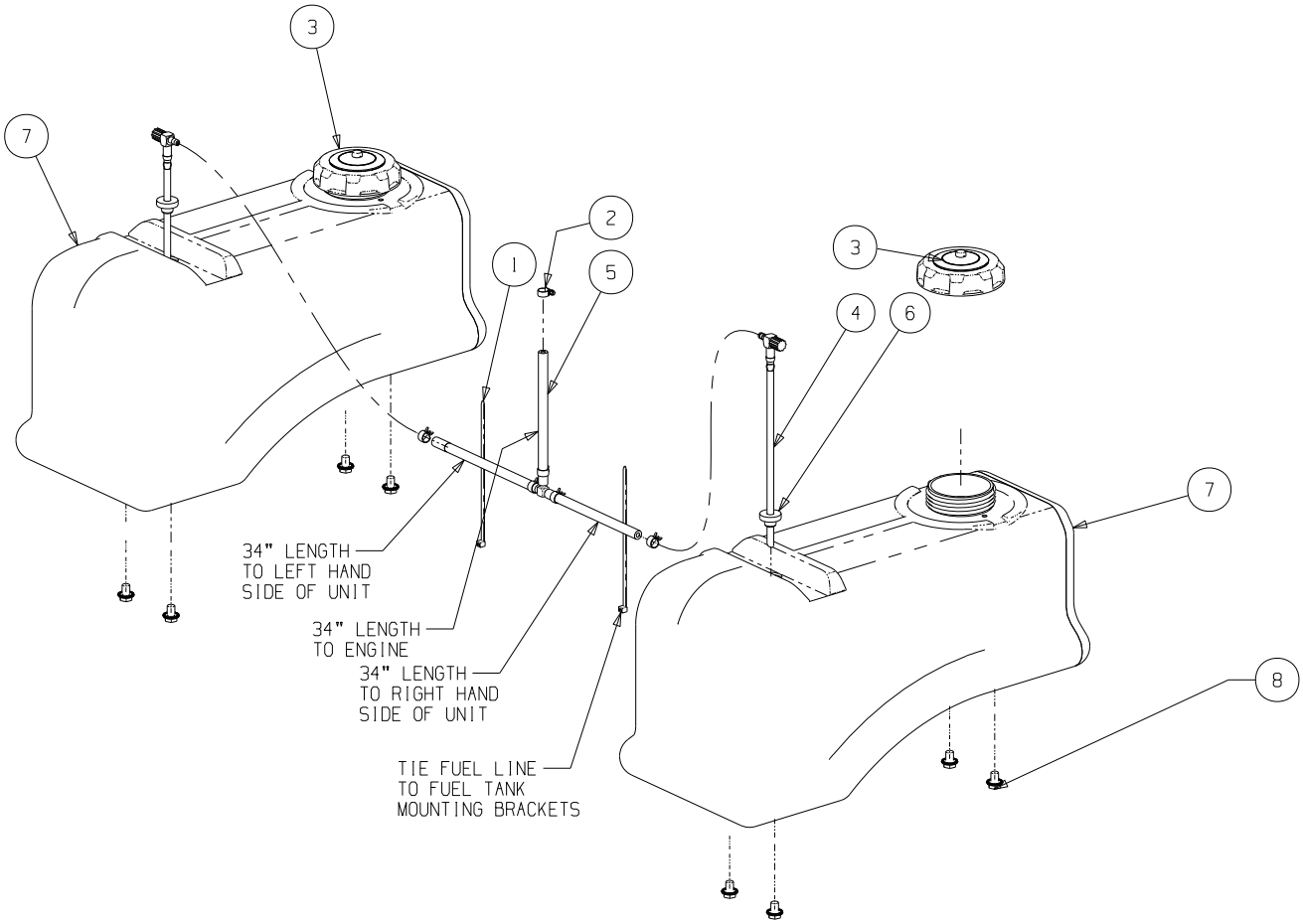

GD: 02001910-08/01/08

Ref. No.	Part No.	Description	Qty.
1	00012470	Cable Tie	2
2	01000215	Hose Clamp, SAE #4: 1/4-5/8, SS	1
3	751-3124D	Fuel Cap, 3.5	2
4	01007425	Fuel Fitting	2
5	02001908	Fuel Hose Assembly includes:	1
	--	Hose, 1/4" Fuel Line (in inches)	102
	00012235	Clamp, Union	5
	01003473	Tee Fitting, Fuel	1
6	02002253	Grommet, Fuel Tank	2
7	02003842	Fuel Tank	2
8	02005013	Hex Cap Screw, 3/8-16 x .50 Flange Whiz	8

Rear Bumper - Figure 10 and Parts List

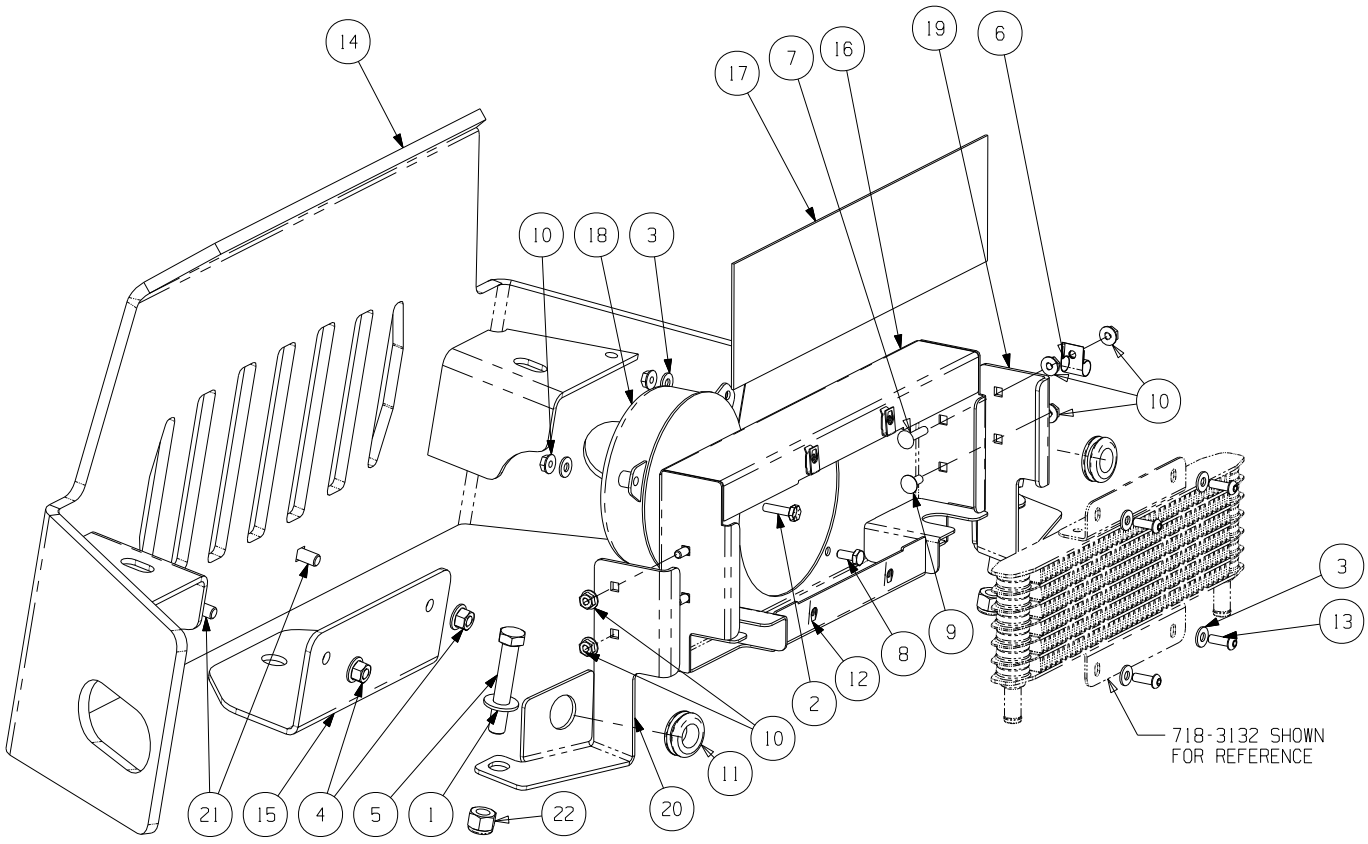

GD: 02003115-08/12/08

Ref. No.	Part No.	Description	Qty.	Ref. No.	Part No.	Description	Qty.
1	00010958	Washer, 1/2	2	12	01008539	U-Nut, 1/4-20	4
2	00011447	Capscrew, 1/4-20 x 1.00	1	13	01009362	Capscrew, 1/4-20 x .750	4
3	00012154	Washer, 1/4	7	14	02004118	Bumper Assembly	1
4	00022560	Nut, Hex 3/8-16 Flange Lock	2	15	02004120	Hitch Bracket	1
5	00030046	HHCS, 1/2-13, 3.00	2	16	02004473	Heat Exchanger Assembly	1
6	00031081	Clamp, 1/2	1	17	02004480	Heat Exchanger Screen	1
7	00031602	Carriage Bolt, 1/4-20 x 1.00	1	18	02004481	Fan	1
8	01000338	HHCS, 1/4-20 x .620	2	19	02005037	Cooler Mounting Bracket, LH	1
9	01001160	Carriage Screw, 1/4-20 x .62	3	20	02005039	Cooler Mounting Bracket, RH	1
10	01002766	Nut, 1/4-20, Hex Flange Lock	8	21	710-3168	Carriage Bolt, 3/8-16 x 1.00	2
11	01004040	Grommet, .75 ID	2	22	712-3083	Hex Nut, 1/2-13, Insert Lock	2

Front Axle Assembly - Figure 11

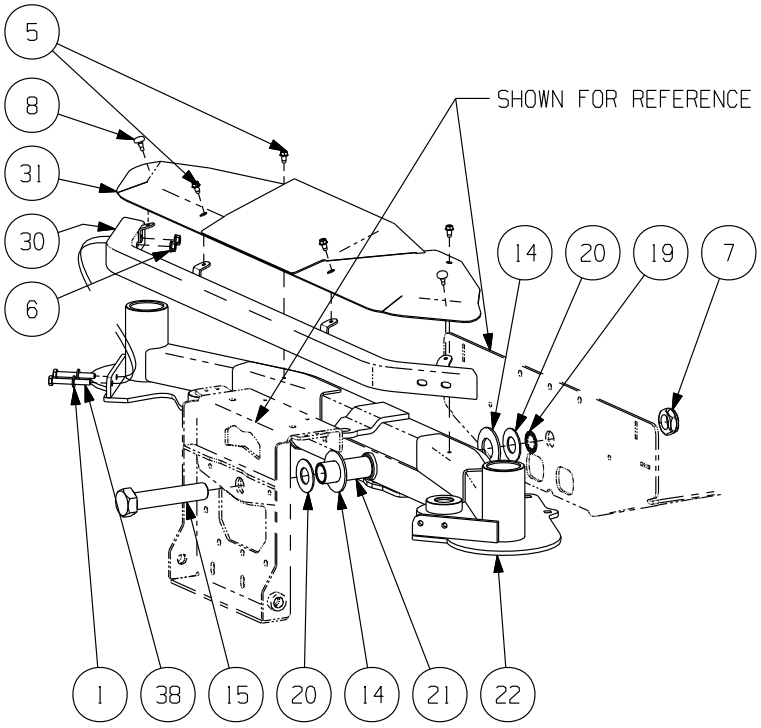

BUMPER AND PIVOT
INSTALLATION

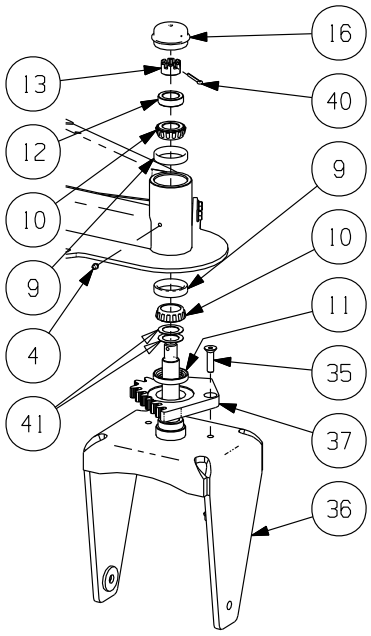

CASTER INSTALLATION
(RIGHT SHOWN, LEFT OPPOSITE)

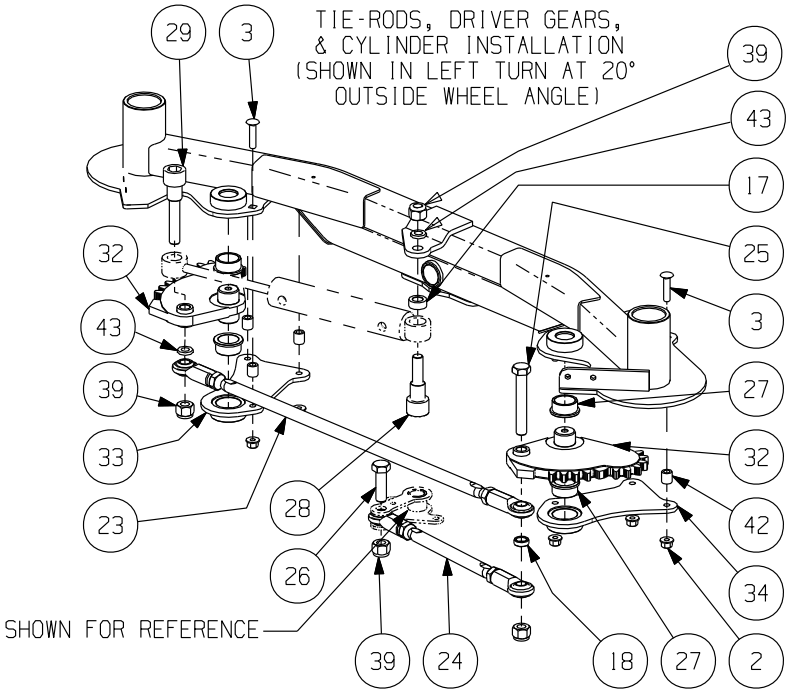

GD: 02003111-11/19/08

Front Axle Assembly - Parts List for Figure 11

Ref. No.	Part No.	Description	Qty.	Ref. No.	Part No.	Description	Qty.
1	00009812	Flat Washer, 5/16	4	23	02003187	Tie Rod Assembly, 1/2-20 x 15.95 LG	1
2	00022560	Flange Lock Hex Nut, 3/8-16	8	24	02003217	Tie Rod Assembly, 5/8-18 x 14 LG	1
3	00030276	Carriage Bolt, 3/81-6 x 1-1/2	6	25	02003220	HHCS, 5/8-11 x 4.00	1
4	00060078	Grease Fitting, 1/4-28 x 3/16	2	26	02003222	HHCS, 5/8-11 x 2.00	1
5	01000628	Screw, TT, 1/4-20, 0.5, Hex Index Washer	4	27	02003307	Flange Bearing, 1.253 x 1.749 x .740	4
6	01000635	Nut, Lock, HexFlange, 5/16-18	4	28	02003356	Shoulder Bolt, .875 x 1.030 x 1.75	1
7	712-04191	Nut, 1.0-14, Flange TopLock	1	29	02003357	Shoulder Bolt, .875 x 1.030 x 2.88	1
8	01001170	Rubber Bumper, .62 OD x .22 THK	2	30	02003369	Front Bumper Assembly	1
9	01002620	Cup Bearing	4	31	02003374	Axle Cover Assembly	1
10	01002621	Bearing Cone	4	32	02003375	Driver Gear Assembly	2
11	01002622	Seal	2	33	02003390	Steering Support Bracket Assembly, LH	1
12	01002624	Ring Seal	2	34	02003394	Steering Support Bracket Assembly, RH	1
13	01002626	Slotted Nut, 3/4-16	2	35	02005073	FHCS, 3/8-16 x 1.50	2
14	01006294	Bell Washer, 1.25 ID x 2.5 x .157	2	36	603-04645	Yoke Assembly	2
15	02003804	Hex Cap Screw, 1-14 x 5.0	1	37	703-06855	Steering Gear	2
16	01006347	Grease Cap, 1.986 OD	2	38	710-0395	HHCS, 5/16-18 x 2-1/4	4
17	01007527	Spacer, .630 ID x 1.06 OD x .440	2	39	712-3016	Nut, 5/8-11m Hex Nylon Lock	4
18	01008404	Spacer, .635 ID x .28 LG	1	40	714-0162	Cotter Pin, 5/32, 1.25	2
19	01009997	Retainer Extension, Self Locking	1	41	736-04386	Washer, 1.00 x 1.50 x .03, SS	4
20	02000588	Flat Washer, 1.00 ID	2	42	750-05075	Spacer, .407 x .625 x .675 LG	6
21	02000589	Spacer, 1.005 ID x 1.25 OD x 3.6	1	43	00002766	Washer, 1 1/2 x 5/8 x .055	2
22	02003120	Axle Assembly	1				

Control Assembly - Figure 12 and Parts List

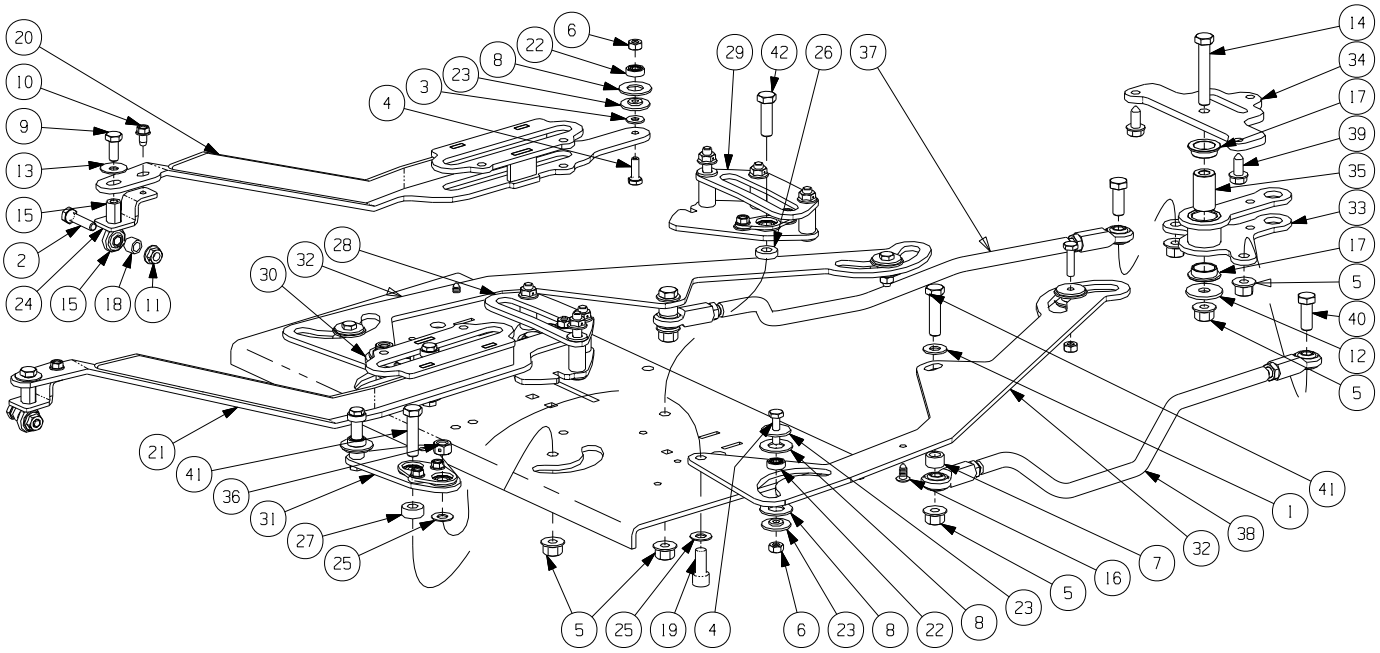

GD: 02003105-02/11/09

Ref. No.	Part No.	Description	Qty.	Ref. No.	Part No.	Description	Qty.
1	00012158	Flat Washer, 3/8	2	22	02003377	Ball Bearing, .25 ID x .625 OD x .196	6
2	00013116	HHCS, 5/16-18 x 1-1/4	2	23	02003379	Shoulder Spacer, .251 x 1.00 x .155	10
3	736-0463	Washer, .25 x .630 x .0515	2	24	02003384	Support Rod End Bracket	2
4	00013416	HHCS, 1/4-20 x 1.00	6	25	02005054	Spacer, .381 x .750 x .040	4
5	00022560	Hex Nut, 3/8-16, Lock Flange	9	26	02005055	Spacer, .381 x .750 x .150	2
6	00023041	Nut, 1/4-NC, Side Lock	6	27	02005056	Spacer, .381 x .750 x .312	2
7	00081551	Spacer, .625 OD x .407 ID x .375	2	28	02005290	Speed Control Cam Shaft, LH	1
8	01000101	Slide Washer	10	29	02005291	Speed Control Cam Shaft, RH	1
9	01000627	HHCS, 5/16-24 x .75	2	30	02005292	Steering Pivot Assembly, LH	1
10	01000628	Screw, TT, 1/4-20, 0.5, Hex Index Washer	2	31	02005293	Steering Pivot Assembly, RH	1
11	01000635	Nut, Lock, HexFlange, 5/16-18	2	32	02005463	Control Link Plate	2
12	01000872	Washer, 1.25 x .411 x .100	1	33	02005468	Front Steering Pivot Assembly	1
13	01000960	Belle Washer, .325 x .930 x .045	2	34	02005482	Pivot Steering Mounting Plate	1
14	01001366	HHCS, 3/8-16 x 2.25	1	35	02005483	Spacer, .385 x .750 x 1.28	1
15	01008410	Rod End, 5/16, RH	2	36	02005566	Hex Nut, 3/8-16, Center Lock	2
16	01008801	Rivet, 1/4 x 5/8	2	37	603-04618	Control Rod Assembly, LH	1
17	02003163	Flange Bearing, .752 x 1.125 x .305	2	38	603-04619	Control Rod Assembly, RH	1
18	02003170	Spacer, .334 x .500 x .375	2	39	710-04484	Self Tapping Screw 5/16-18 x .750	2
19	02003309	Socket Head Cap Screw, 3/8-16 x .88	2	40	710-0514	HHCS, 3/8-16 x 1.00	2
20	02003327	Pump Control Bracket Assembly, RH	1	41	710-0520	HHCS, 3/8-16 x 1.50	4
21	02003330	Pump Control Bracket Assembly, LH	1	42	710-3005	HHCS, 3/8-16 x 1.25	2

Wheel Assembly - Figure 13 and Parts List

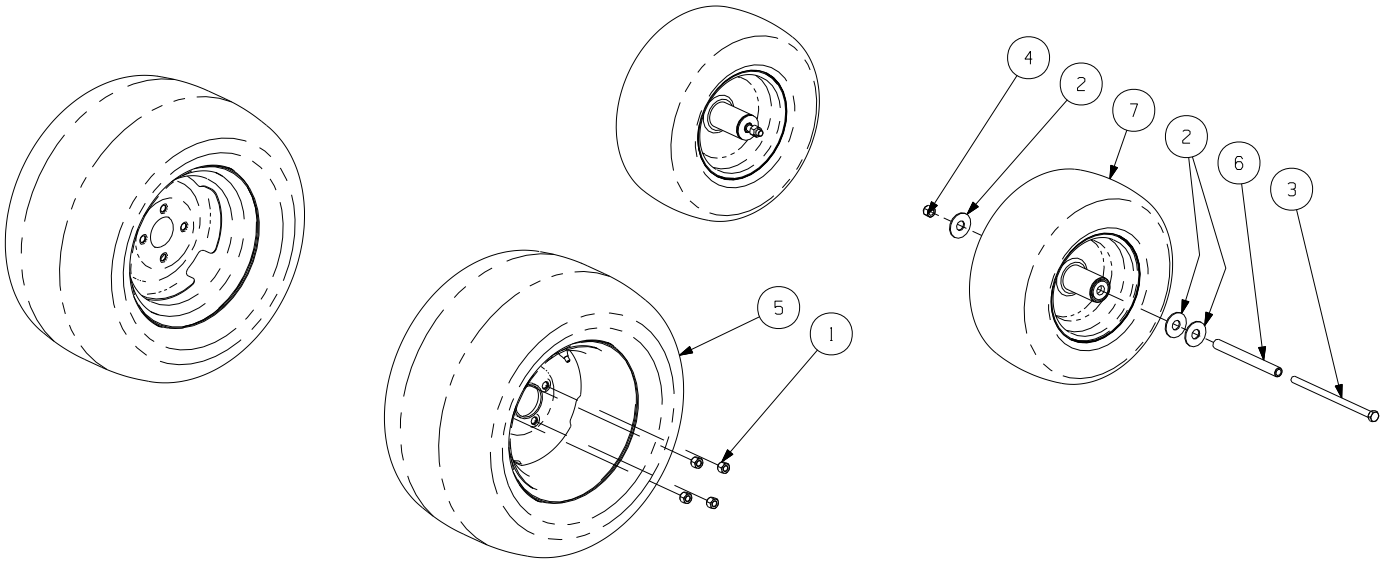

GD: 02003112-05/29/08

Ref. No.	Part No.	Description	Qty.
1	00012187	Lug Nut, 1/2-20	8
2	01000392	Washer, .781 ID x 2.00 OD x .105	6
3	01009288	HHCS, 1/2-20 x 9.50	2
4	02002299	Nut, 1/2-20, Lock	2
5	02002668	Wheel Assembly, 24 x 12.00-12, Beige	2
		Includes:	
	00073975	Tire, 24 x 12.00-12,Turf Master	
		Rim, 12 Dia x 8.50 width	
6	02003355	Spacer, .51 ID x .75 OD x 7.49	2
7	02003396	Front Wheel Assembly, 16 x 6.50-8 includes:	2
	734-04449	Tire, 16 x 6.50-8	
OPTIONAL TIRES			
	01002182	Wheel Assembly, 24 x 12.00-12, Turf Saver	
	01004473	Tire, 24 x 12.00-12, Turf Saver	

Steering Assembly - Figure 14 and Parts List

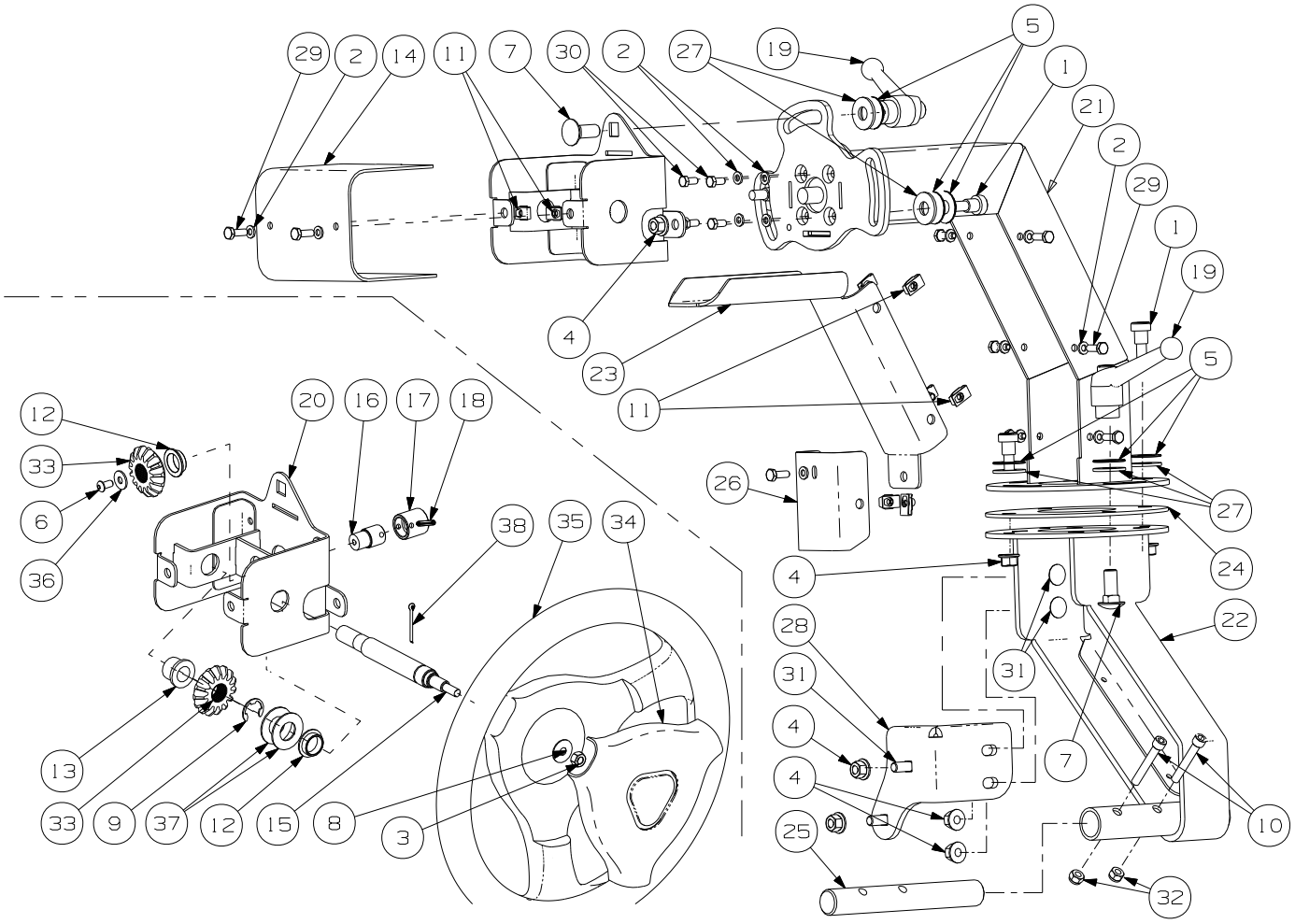

GD: 02004291-10/01/08

Ref. No.	Part No.	Description	Qty.	Ref. No.	Part No.	Description	Qty.
1	00011450	Shoulder Bolt, 1/2 x 1/2	5	20	02005378	Steering Housing Assembly	1
2	00012132	Lock Washer, 1/4	13	21	02005386	Steering Column Assembly, Upper	1
3	00012167	Hex Nut, 5/16-24	1	22	02005390	Steering Column Assembly, Lower	1
4	00022560	Hex Nut, 3/8-16, Flange Lock	9	23	02005394	Steering Column Cover, Large	1
5	00070022	Washer, 1/2, SS	9	24	02005396	Wear Plate	1
6	01000443	Capscrew, 1/4-20 x .500	1	25	02005397	Pin, 1.0 Dia x 7.50	1
7	01000517	Carriage Bolt, 1/2-13 x 1-1/4	2	26	02005495	Steering Column Cover, Small	1
8	01000960	Washer, .325 x .930 x .045	1	27	02005512	Washer, .531 ID x 1.25 OD x .100	7
9	01003994	E-Clip, 3/4 Dia.	1	28	02005579	Steering Column Support Bracket	1
10	01007962	Socket Head Capscrew, 5/16-18 x 2.00	2	29	710-3015	Screw, Hex, Cap, 1/4-20 x .75	9
11	01008539	U-Nut, 1/4-20	9	30	710-3140	HHCS, M6-1.00, 14mm	4
12	02003163	Flange Bearing, .752 x 1.125 x .305	2	31	710-3168	Carriage Bolt, 3/8-16 x 1-1/4	4
13	02004002	Flange Bearing, .630 x .875 x .75	1	32	712-0429	Nut, 5/16-18, Nylock	2
14	02004107	Steering Box Cover	1	33	717-1019	Splined Bore Miter Gear	2
15	02004109	Steering Shaft	1	34	731-06459	Steering Wheel Cover	1
16	02004110	Steering Valve Shaft	1	35	731-3209	Steering Wheel	1
17	02004308	Steering Valve Hub	1	36	736-0173	Washer, .28 x .74 x .063	1
18	02004622	Heavy Duty Pin, 3/16 x 1.0	1	37	736-0188	Washer, .76 x 1.49 x .06	2
19	02005058	Steering Column Adjustment Lever	2	38	714-0470	Cotter Pin, 1/8 x 1.25	1

Seat/Floor Panel Assembly- Figure 15 and Parts List

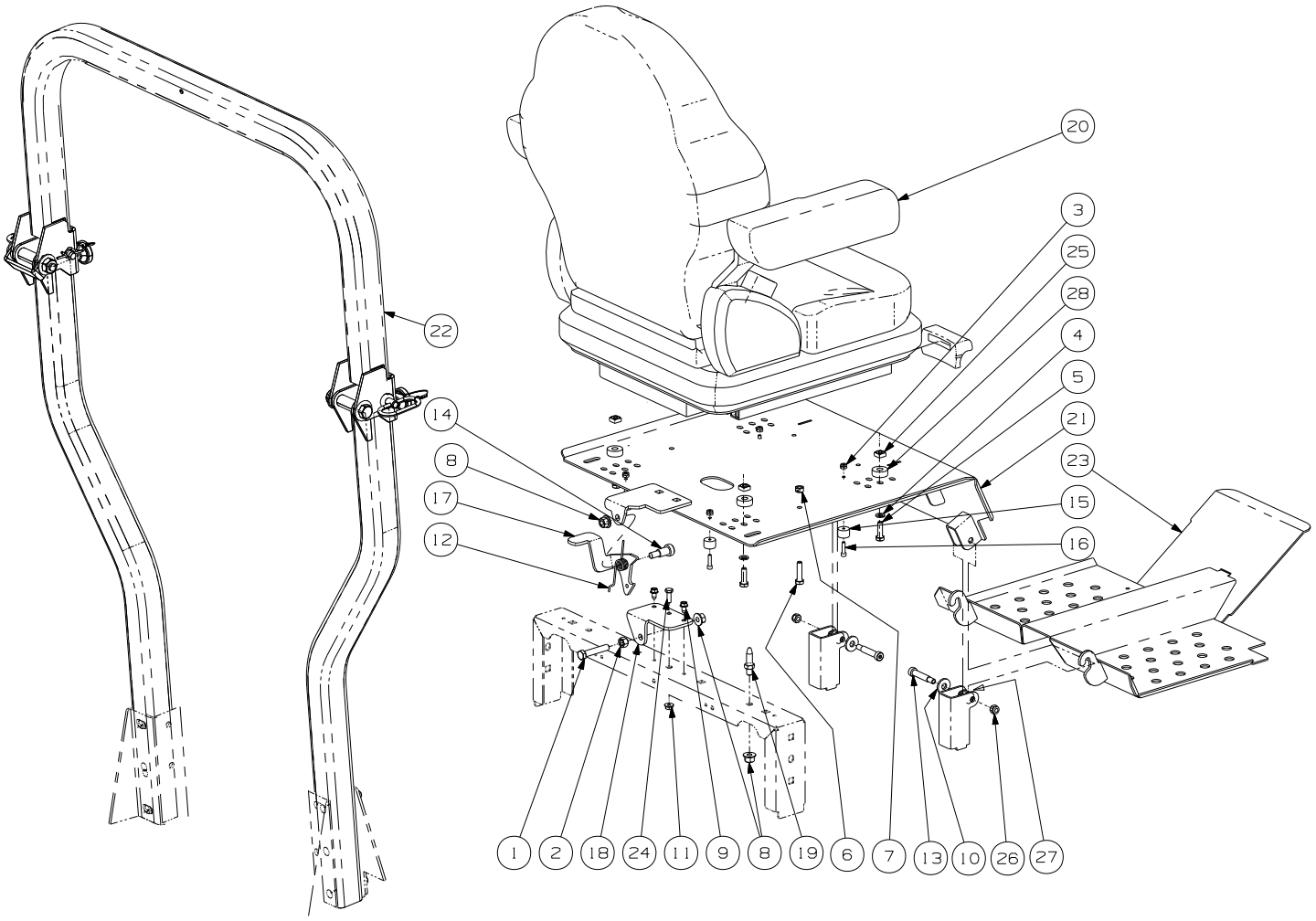

GD: 02003109-07/25/08

Ref. No.	Part No.	Description	Qty.	Ref. No.	Part No.	Description	Qty.
1	00002528	Hex Cap Screw 3/8-16 x 2.00	1	17	02003732	Latch Lever Bracket	1
2	00006131	Hex Nut, 3/8-16	1	18	02003738	Latch Bracket	1
3	00006194	Nut, 10-24, Nylon Insert	4	19	02003745	Adjustable Stud	1
4	00012168	Lock Washer, 5/16	4	20	02004228	Seat w/ Seat Belt & Suspension	1
5	00012180	Hex Cap Screw, 5/16-18 x 1.00	4		01008364	Armrest Kit	
6	00013116	Hex Cap Screw, 5/16-18 x 1-1/4	2		02000767	Seat Switch Assembly	
7	00022547	Nut, 5/16-18, Center Lock	2	21	02004303	Seat Plate Assembly	1
8	00022560	Flange Lock, Hex Nut, 3/8-16	3	22	02005081	Foldable Rops Assembly includes:	1
9	01000628	Screw, TT, 1/4-20, 0.5, Hex Index Washer	2			Knob	2
10	01000723	Flat Washer, .406 ID, 1.0 OD, .105	2		02004324	Pin, Lock	2
11	01002766	Lock Nut, 1/4-20	1	23	02005595	Floor Panel Assembly	1
12	01008140	Deck Lift Spring, Left Hand	1	24	710-3015	Screw, Hex, Cap, 1/4-20 x .75	1
13	01009459	Shoulder Bolt, .375 x 1.50	2	25	712-04190	Nut, 5/16-18	4
14	02002091	Shoulder Bolt, 1/2 x 3/4, 3/8-16	1	26	712-0429	Nut, 5/16-18, Nylock	2
15	02002963	Rubber Stop with Washer	4	27	735-04159	Grommet, .38 ID x .75 OD x .75	2
16	02002964	Standard Cap Screw, #10-24 x .75	4	28	750-3119	Spacer, .406 ID x 1.00 OD x .38	4

31HP Kawasaki Engine Assembly - Figure 16

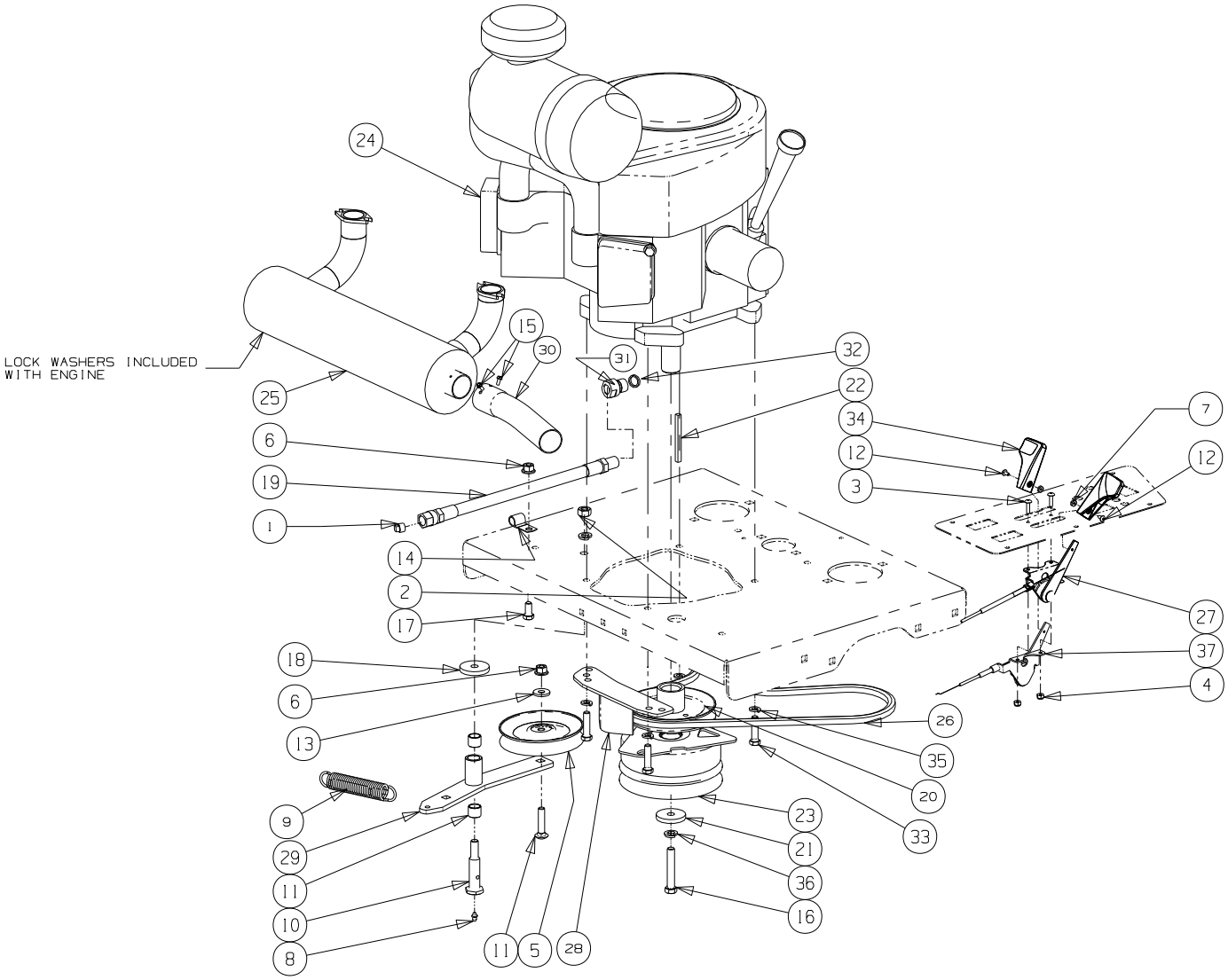

Description	Part Number
Air Filter (Primary)	KM-11013-7020
Air Filter (Safety)	KM-11013-7019
Fuel Filter	KM-49019-7001
Oil Filter	KM-49065-2078
Spark Plug	KM-BPR4ES

GD: 02003113-12/22/08

31HP Kawasaki Engine Assembly - Parts List for Figure 16

Ref No	Part No.	Description	Qty.
1	00002834	Pipe Plug, 3/8 NPT	1
2	00005763	Hex Nut, 7/16-14	1
3	00014602	Round Hd. Machine Screw, 10-32 x 3/4	2
4	00014608	Lock Nut, Nylon Insert, 10-32	2
5	00021975	Idler Pulley	1
6	00022560	Flange Lock, Hex Nut, 3/8-16	2
7	00060056	Nut Washer, W/Star, 8-32	2
8	00060078	Grease Fitting, 1/4-28 x 3/16	1
9	01000199	Extension Spring, 1.00 OD x 5.00 lg	1
10	01000302	Shoulder Screw, 7/16-14	1
11	01000364	Hex Carriage Screw, 3/8-16, 1.75	1
12	01000721	Machine Screw, 8-32, .375	2
13	01000723	Flat Washer, .406 ID, 1.0 OD, .105	1
14	01000728	Clip, Heat Shield Cable	1
15	01000811	Screw, #8-32 x 0.375	2
16	01001395	Capscrew, 7/16-20 x 2.50	1
17	01002601	Hex Cap Screw, 3/8-16, .750	1
18	01003269	Flat Washer, 7/16 ID x 1.75 OD x .25	1
19	01003283	Oil Drain Hose	1
20	756-04382	Pump Drive Pulley	1
21	01005314	Flat Washer, 7/16 ID x 1.75 OD x .25	1
22	01005856	Key, 1/4 x 1/4 x 3	1
23	02002825	Clutch Brake, 1.125 ID	1
24	02003200	31HP Twin Engine, Kawasaki	1
25	02003201	Muffler Accessory, Kawasaki	1
26	754-04233	Belt, BB 57.00	1
27	02003422	Choke, Control Cable	1
28	02003543	Retainer Clutch Assembly	1
	02004075	Engine Idler Arm	1
29	01000308	Bearing	2
30	02005082	Muffler Accessory Exhaust Tube	1
31	02005701	Oil Drain Adapter	1
32	02005713	O-Ring Fitting	1
33	710-0520	HHCS, 3/8-16, 1-1/2	4
34	731-04914	Control Throttle Knob	2
35	736-0169	Lock Washer, 3/8	4
36	736-0171	Lock Washer, 7/16	2
37	746-04534	Throttle, Control Cable	1

Note: Engine Oil 10W40

37HP Kawasaki Engine Assembly - Figure 17

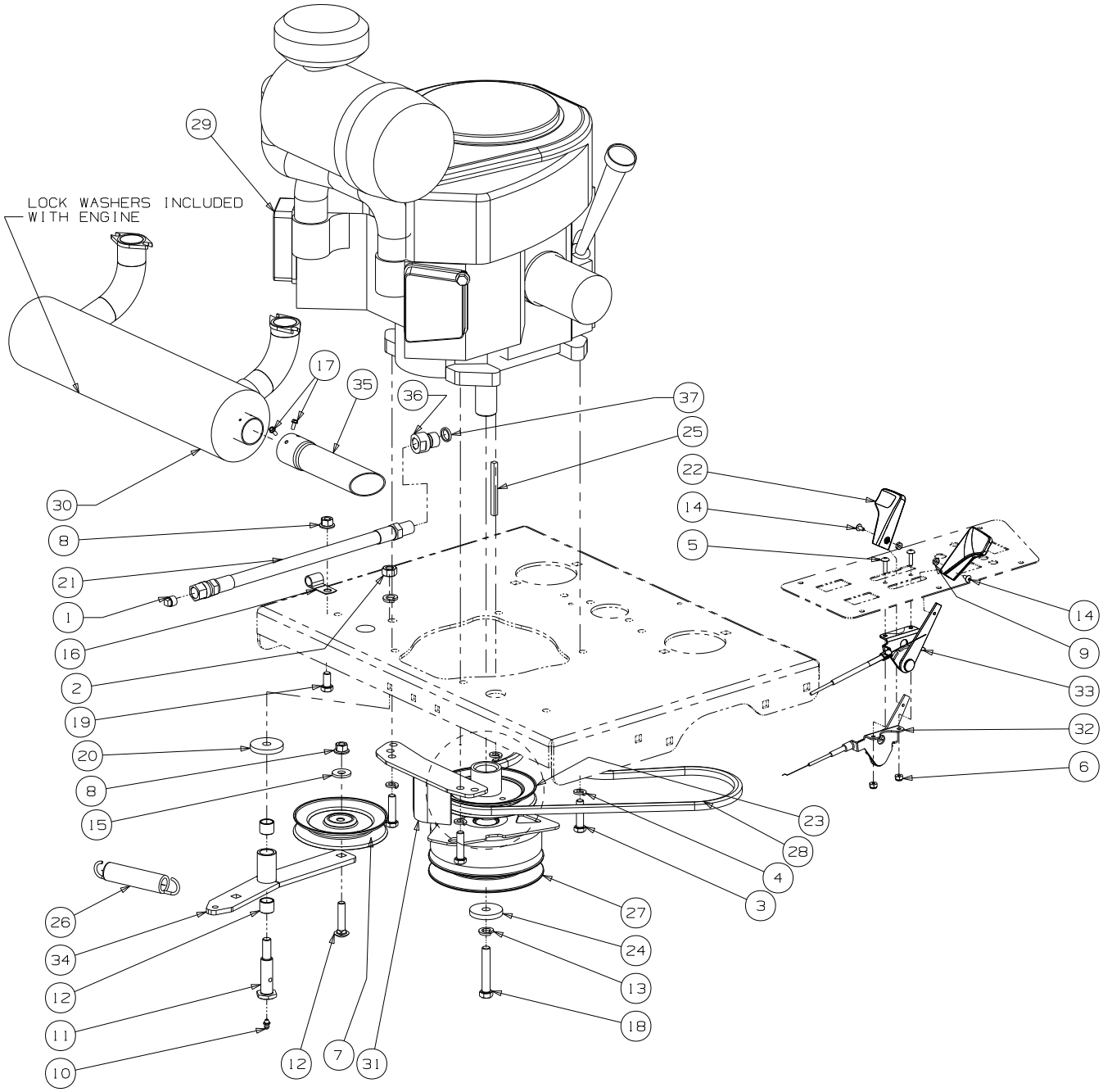

Description	Part Number
Air Filter	KM-11013-7038
Air Filter (Inner)	KM-11013-7039
Fuel Filter	KM-49019-7001
Oil Filter	KM-49065-2078
Spark Plug	KM-BPR5ES

GD: 853-000001-12/22/08

37HP Kawasaki Engine Assembly - Parts List for Figure 17

Ref No	Part No.	Description	Qty.
1	00002834	Pipe Plug, 3/8 NPT	1
2	00005763	Hex Nut, 7/16-14	1
3	00010980	HHCS, 3/8-16, 1-1/2	4
4	00012157	Lock Washer, 3/8	4
5	00014602	Round Hd. Machine Screw, 10-32 x 3/4	2
6	00014608	Lock Nut, Nylon Insert, 10-32	2
7	00021975	Idler Pulley	1
8	00022560	Flange Lock, Hex Nut, 3/8-16	2
9	00060056	Nut Washer, W/Star, 8-32	2
10	00060078	Grease Fitting, 1/4-28 x 3/16	1
11	01000302	Shoulder Screw, 7/16-14	1
12	01000364	Hex Carriage Screw, 3/8-16, 1.75	1
13	01000389	Lock Washer, 7/16	2
14	01000721	Machine Screw, 8-32, .375	2
15	01000723	Flat Washer, .406 ID, 1.0 OD, .105	1
16	01000728	Clip, Heat Shield Cable	1
17	01000811	Screw, #8-32 x 0.375	2
18	01001395	Capscrew, 7/16-20 x 2.50	1
19	01002601	Hex Cap Screw, 3/8-16, .750	1
20	01003269	Flat Washer, 7/16 ID x 1.75 OD x .25	1
21	01003283	Oil Drain Hose	1
22	731-04914	Control Throttle Knob	2
23	756-04382	Pump Drive Pulley	1
24	01005314	Flat Washer, 7/16 ID x 1.75 OD x .25	1
25	01005856	Key, 1/4 x 1/4 x 3	1
26	01009635	Extension Spring, .98 OD x 5.00	1
27	02002825	Clutch Brake, 1.125 ID	1
28	754-04233	Belt, BB, 57.00	1
29	02003521	Engine, 37HP Kawasaki	1
30	02003522	Muffler, Kawasaki	1
31	02003543	Retainer Clutch Assembly	1
32	746-04571	Throttle, Control Cable	1
33	02003743	Choke, Control Cable	1
34	02004075	Engine Idler Arm includes:	1
	01000308	Bearing	2
35	02005091	Muffler Accessory Exhaust Tube	1
36	02005701	Oil Drain Adapter	1
37	02005713	O-Ring Fitting	1

Electrical Assembly Kawasaki - Figure 18

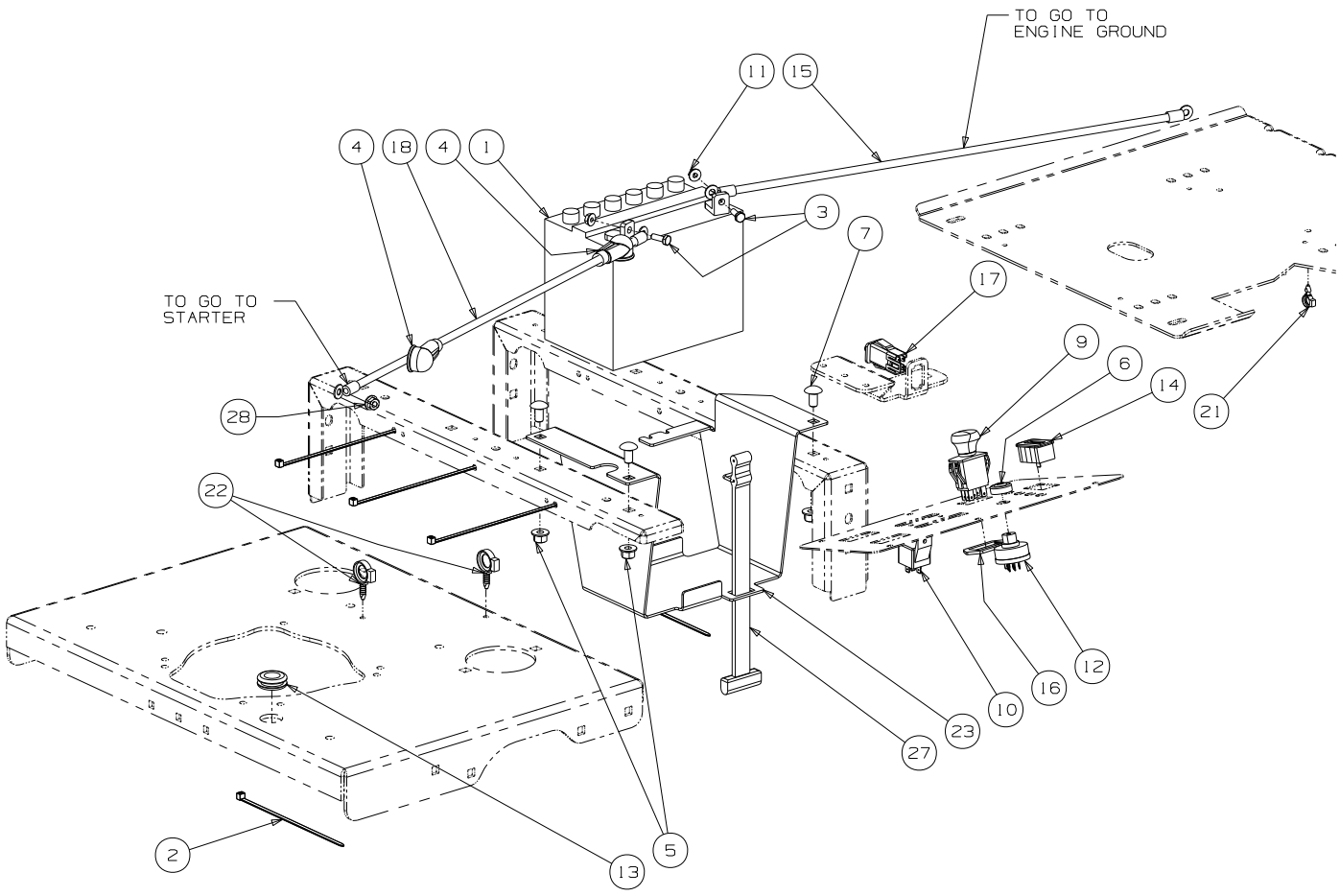

Fasten relay (01002251) with self-tapping screw (01000443) on LH control panel shown in Fig. 8.

GD: 02003114-10/02/08

Electrical Assembly Kawasaki - Parts List for Figure 18

Ref. No.	Part No.	Description	Qty.
1	00012032	Battery, 12V 225CCA 30 Min	1
2	00012470	Tie, Cable, 3/16 x .05 x 7.4"	5
3	710-3015	Screw, Hex, Cap, 1/4-20 x .75	2
4	00013258	Boot, 1" OD Rubber Battery-PST, Red	2
5	00022560	Hex Nut, Flange Lock, 3/8-16	3
6	00032097	Nut, W/Cap, 5/8-32 Ignition	1
7	01000372	Carriage Bolt, 3/8-16 x .75 Long	3
8	01001811	Hourmeter, Harness (not shown)	1
9	01002111	Switch, Electric, PTO	1
10	01002251	Relay, 12V 40A	1
11	01002766	Hex Flange Lock Nut, 1/4-20	2
12	01003581	Switch, Ignition, 6 Pin includes:	1
	725-1341B	Key	1
13	01004040	Grommet, .75 ID	1
14	725-04893	Meter, Hour	1
15	01009623	Cable, Battery Red, 34"	1
16	01009905	Bracket, PTO Switch Retainer	1
17	02000024	Switch, Safety N.O./N.C.	1
18	02002059	Cable, Battery Red, 42"	1
19	02002822	Wire Harness Adaptor (not shown)	1
20	02002824	Harness Assembly (not shown)	1
21	02003038	Electrical Conduit Clip, 3/8	1
22	02003775	Electrical Conduit Clip, 5/8	2
23	02004355	Battery Bracket	1
24	02004924	Fan Wiring Adaptor (not shown)	1
25	02004925	Seat harness Adaptor (not shown)	1
26	629-04164	Wire harness Assembly, Switch (not shown)	1
27	723-3064	Strap, Battery	1
28	02003984	Nut, Flange Whiz	1

60" Lift Assembly - Figure 19

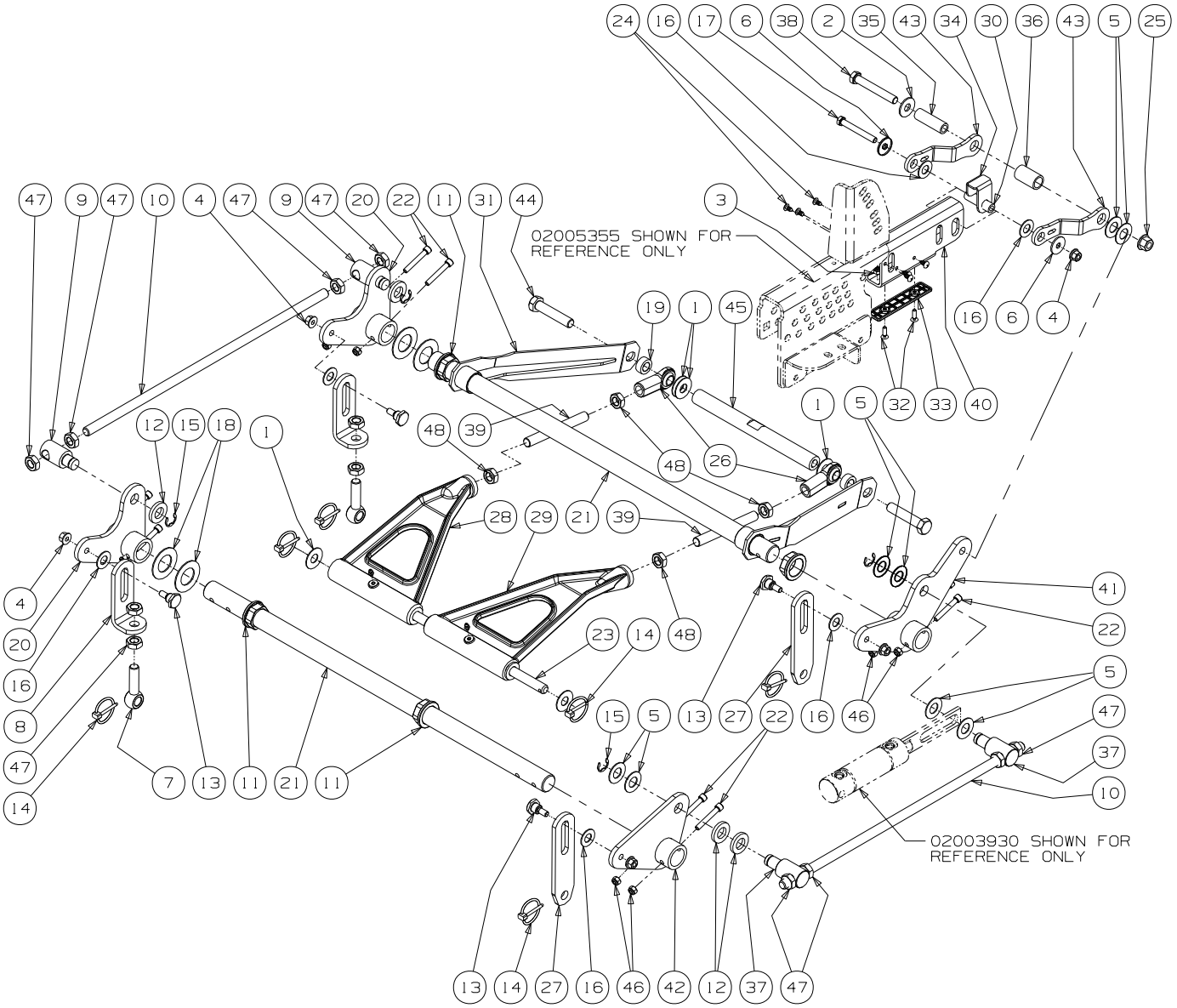

GD: 02003106-09/02/08

60" Lift Assembly - Parts List for Figure 19

Ref. No.	Part No.	Description	Qty.
1	00002766	Washer, 1.5 x .655 x .055	5
2	00011459	Flat Washer, 1/2	1
3	00012152	Lock Nut w/Nylon Insert	2
4	00022560	Hex Nut, Flange Lock, 3/8-16	5
5	736-0188	Washer, .76 x 1.49 x .06	8
6	01000872	Flat Washer, 1.25 x .411 x .100	2
7	01001744	Eye Bolt, 5/8ID	2
8	01001746	Eye Bolt Mount Link, 5/8 ID	2
9	01001855	Ferule Lift	2
10	01001857	Lift Connector Rod	2
11	01001930	Hex Flange Bearing, 1.25 ID	4
12	01003123	Spacer, .812 ID x .268 Lg.	4
13	01003535	Shoulder Screw, 0.625 OD x .437 Lg.	4
14	01003993	Linch Pin, 3/16 Dia.	6
15	01003994	E Clip, 3/4 Dia.	4
16	01004003	Nylon Flat Washer, 5/8	6
17	01004127	HHCS, 3/8-16, 3.00	1
18	01006408	Flat Washer, 1.25 ID	4
19	01007527	Spacer, .630 ID x 1.06 OD x .440	2
20	01007680	Bellecrank Weldment Assembly	2
21	01007681	Deck Lift Shaft	2
22	01007962	Socket Head CapScrew, 5/16-18 x 2	8
23	01008453	Lift Link Rod	1
24	01008801	Rivet, 1/4 x 5/8	6
25	01010119	Nut, 1/2-13, FlangeLock	1
26	02000293	Rod End, 5/8, RH	2
27	02000561	Deck Link	2
28	02002708	Bearing Lift Brace Assembly, Left Hand includes:	1
	00060078	Grease Fitting	1
	02002384	Bearing	2
29	02002709	Bearing Lift Brace Assembly, Right Hand includes:	1
	00060078	Grease Fitting	1
	02002384	Bearing	2
30	02003043	Spacer, .375 ID x .625 OD x 2.20	1
31	02003257	Front Frame Strut Assembly	2
32	02003505	Flat Head Cap Screw, 1/4-20 x .75	2
33	02003749	Lift Wear Plate	1
34	02003942	Lock Bracket	1
35	02003944	Spacer, .51 ID x .75 OD x 2.38	1
36	02003945	Spacer, .765 ID x 1.0 OD x 1.70	1
37	02004280	Ferule Lift, 1.938	2
38	02004518	HHCS, 1/2-13 x 3.50	1
39	02004692	Rod, 5/8-18 x 5.50	2
40	02005103	Lift Tube, 3.0 x 1.5	1
41	02005350	Bellecrank Hydraulic Assist Assembly	1
42	02005352	Bellecrank Weldment Assembly	1
43	02005354	Offset Lift Yoke Bracket	2
44	710-04813	HHCS, 5/8-11 x 3.00	2
45	711-05072	Front Lift Link Shaft, Threaded	1
46	712-0429	Nut, 5/16-18, Nylock	8
47	712-3015	Jam Nut, 5/8-11	12
48	712-3056	Jam Nut, 5/8-18	4

72" Lift Assembly - Figure 20

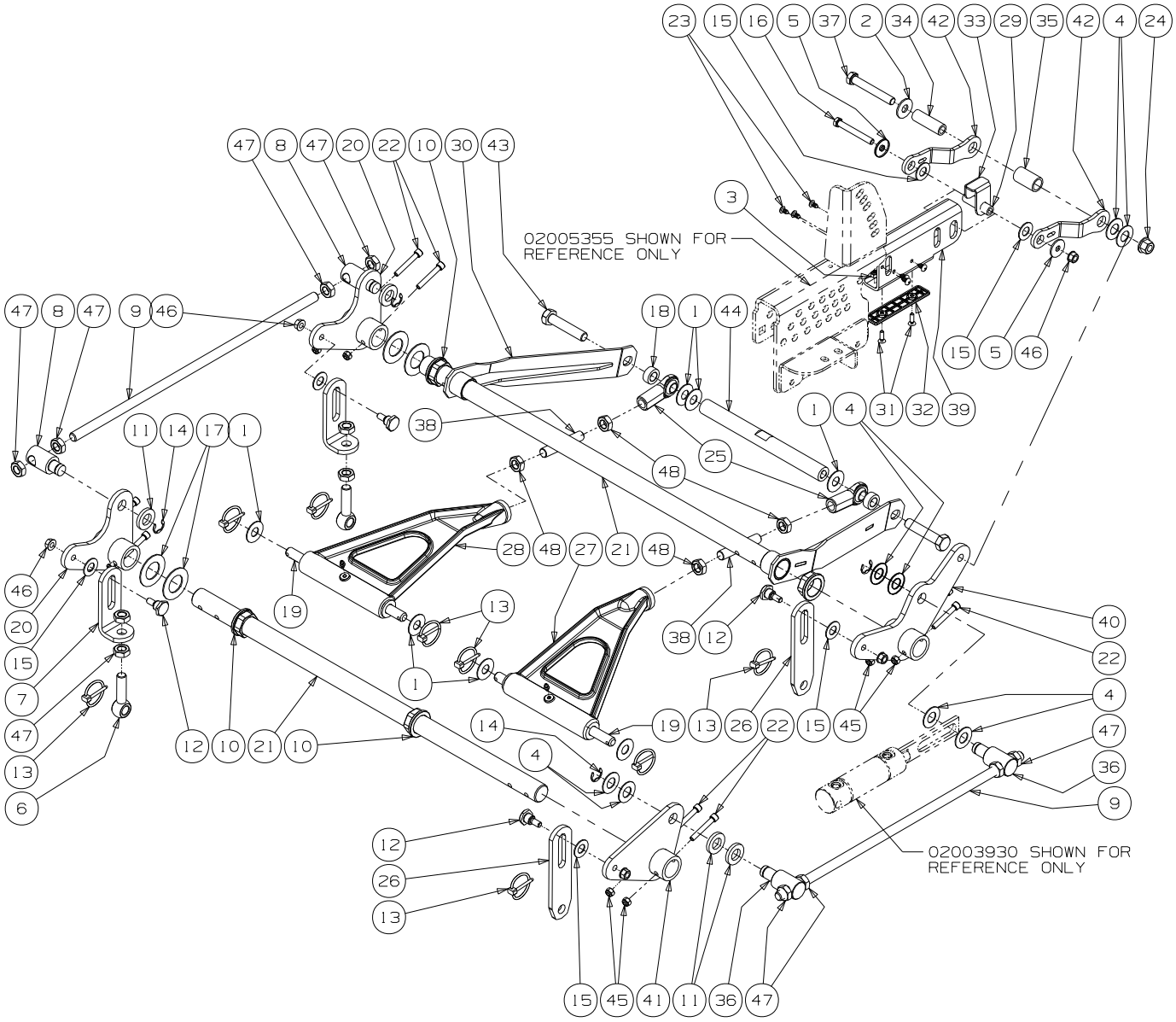

GD: 02003107-09/02/08

72" Lift Assembly - Parts List for Figure 20

Ref. No.	Part No.	Description	Qty.
1	00002766	Washer, 1.5 x .655 x .055	7
2	00011459	Flat Washer, 1/2	1
3	00012152	Lock Nut w/Nylon Insert	2
4	736-0188	Washer, .76 x 1.49 x .06	8
5	01000872	Flat Washer, 1.25 x .411 x .100	2
6	01001744	Eye Bolt, 5/8ID	2
7	01001746	Eye Bolt Mount Link, 5/8 ID	2
8	01001855	Ferule Lift	2
9	01001857	Lift Connector Rod	2
10	01001930	Hex Flange Bearing, 1.25 ID	4
11	01003123	Spacer, .812 ID x .268 Lg.	4
12	01003535	Shoulder Screw, 0.625 OD x .437 Lg.	4
13	01003993	Linch Pin, 3/16 Dia.	8
14	01003994	E Clip, 3/4 Dia.	4
15	01004003	Nylon Flat Washer, 5/8	6
16	01004127	HHCS, 3/8-16, 3.00	1
17	01006408	Flat Washer, 1.25 ID	4
18	01007527	Spacer, .630 ID x 1.06 OD x .440	2
19	01007544	Lift Link Rod	2
20	01007680	Bellecrank Weldment Assembly	2
21	01007681	Deck Lift Shaft	2
22	01007962	Socket Head CapScrew, 5/16-18 x 2	8
23	01008801	Rivet, 1/4 x 5/8	6
24	01010119	Nut, 1/2-13, FlangeLock	1
25	02000293	Rod End, 5/8, RH	2
26	02000561	Deck Link	2
27	02002708	Bearing Lift Brace Assembly, Left Hand includes:	1
	00060078	Grease Fitting	1
	02002384	Bearing	2
28	02002709	Bearing Lift Brace Assembly, Right Hand includes:	1
	00060078	Grease Fitting	1
	02002384	Bearing	2
29	02003043	Spacer, .375 ID x .625 OD x 2.20	1
30	02003257	Front Frame Strut Assembly	2
31	02003505	Flat Head Cap Screw, 1/4-20 x .75	2
32	02003749	Lift Wear Plate	1
33	02003942	Lock Bracket	1
34	02003944	Spacer, .51 ID x .75 OD x 2.38	1
35	02003945	Spacer, .765 ID x 1.0 OD x 1.70	1
36	02004280	Ferule Lift, 1.938	2
37	02004518	HHCS, 1/2-13 x 3.50	1
38	02004691	Rod, 5/8-18 x 3.50	2
39	02005103	Lift Tube, 3.0 x 1.5	1
40	02005350	Bellecrank Hydraulic Assist Assembly	1
41	02005352	Bellecrank Weldment Assembly	1
42	02005354	Offset Lift Yoke Bracket	2
43	710-04813	HHCS, 5/8-11 x 3.00	2
44	711-05072	Front Lift Link Shaft, Threaded	1
45	712-0429	Nut, 5/16-18, Nylock	8
46	712-0431	Hex Nut, Flange Lock, 3/8-16	5
47	712-3015	Jam Nut, 5/8-11	12
48	712-3056	Jam Nut, 5/8-18	4

Speed Control Assembly- Figure 21 and Parts List

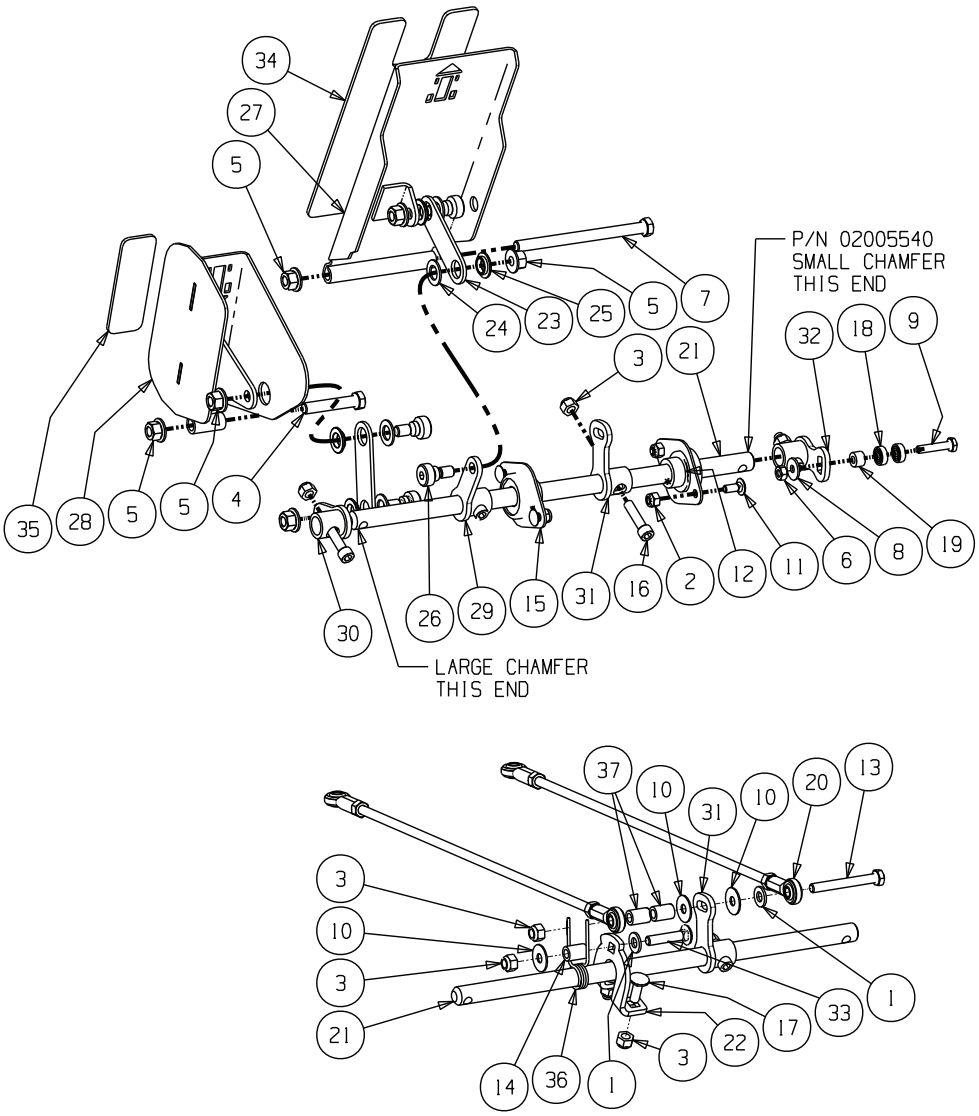

GD: 853-000012-02/10/09

Ref. No.	Part No.	Description	Qty.	Ref. No.	Part No.	Description	Qty.
1	00009812	Flat Washer, 5/16	1	20	02005464	Speed Control Rod Assembly	2
2	00012152	Lock Nut w/Nylon Insert	4	21	02005540	Shaft, .625 x 15.556	1
3	00012165	Nut, 5/16-18, nylock	8	22	02005547	Retainer Bracket	1
4	00012172	HHCS, 3/8-16 x 2.00	1	23	02005549	Conrol Pedal Link	2
5	00022560	Flange Lock Hex Nut, 3/8-16	6	24	02005560	Washer, .51 x .88 x .06	4
6	00023041	Lock Nut, 1/4-NC, Side	1	25	02005568	Flange Bearing, .502 x .875 x .180	4
7	00034167	HHCS, 3/8-16 x 5.00	1	26	02005570	Shoulder Bolt, .50 x .25 x 3/8-16	4
8	01000489	Washer, .265 x .75 x .062	1	27	02005616	Pedal Assembly, Forward	1
9	01000913	HHCS, 1/4-20 x 1.25	1	28	02005618	Pedal Assembly, Reverse	1
10	01000960	Washer, .325 x .930 x .045	3	29	02005622	Arm Assembly, 1.75 LG x .625 Dia.	1
11	01001160	Carriage Screw, 1/4-20 x .62	4	30	02005624	Arm Assembly, 1.375 LG x .625 Dia.	1
12	01006350	Shaft Collar	2	31	02005626	Arm Assembly, 1.75 LG x .625 Dia.	1
13	01007122	HHCS, 5/16-18 x 2.5	1	32	02005628	Hub Assembly	1
14	01007984	Spacer, .315 ID x .500 OD x .699 LG	1	33	710-0262	Carriage Bolt, 5/16-18 x 1.50	1
15	02000487	Flange Bearing	2	34	720-04109	Grip, Fwd	1
16	02002994	Socket Head Capscrew, 5/16-18 x 1.25	4	35	720-04110	Grip, Rev	1
17	02003264	Carriage Bolt, 5/16-18 x .88	2	36	732-04590	Torsion Spring, .66 ID x .47 LG	1
18	02003377	Ball Bearing, .25 ID x .625 OD x .196	2	37	01000799	Spacer, .315 ID x .500 OD x .520 LG	2
19	02005057	Spacer, .256 x .500 x .330	1				

Brake Pedal Assembly- Figure 22 and Parts List

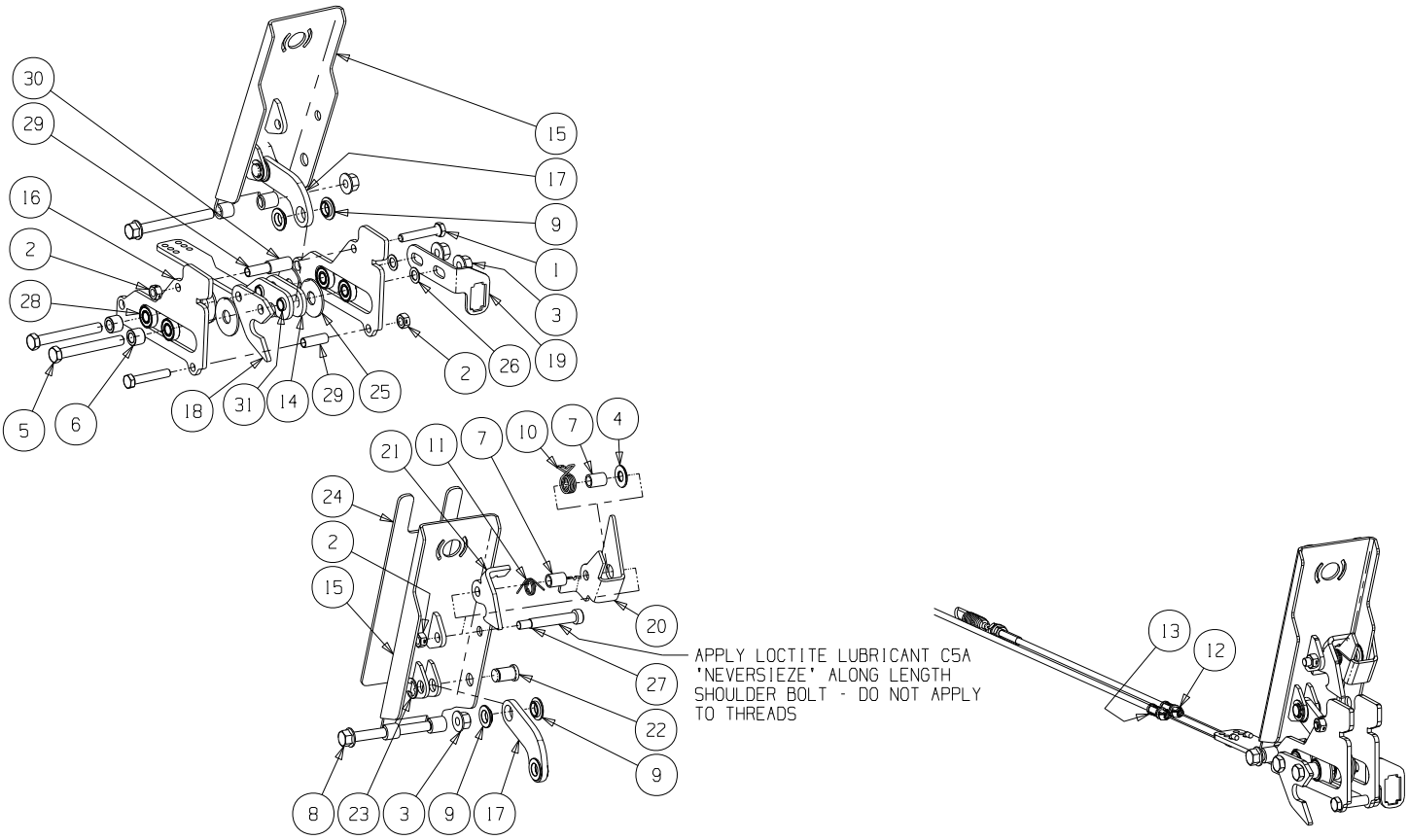

GD: 853-000013-11/19/08

Ref. No.	Part No.	Description	Qty.	Ref. No.	Part No.	Description	Qty.
1	00006129	HHCS, 5/16-18 x 1-3/4	2	17	02005714	Brake Control Link	1
2	00022547	Lock Nut, 5/16-18, Center	3	18	02005718	Lockout Control Plate	1
3	00022560	Flange Lock Hex Nut, 3/8-16	3	19	703-06975	Brake Switch Mounting Bracket	1
4	00061053	Washer, 3/8, SS	1	20	703-06762	Park Engage Bracket	1
5	01004127	HHCS, 3/8-16 x 3.00	2	21	703-06766	Brake Bracket	1
6	750-05180	Spacer, .385 ID x .625 OD x .458	2	22	711-05058	Pin, .500 x .804 LG	1
7	02003436	Spacer, .380 x .500 x .667	2	23	716-0104	E-Ring for .500 Dia. Shaft	1
8	02003666	HHCS, 3/8-16 x 3.50	1	24	720-04108	Grip, Brake	1
9	02005568	Flange Bearing, .502 x .875 x .180	4	25	736-04407	Washer, .531 ID x 1.50 OD x .08	4
10	02005591	Torsion Spring	1	26	736-04418	Washer, .39 ID x .62 OD x .03	2
11	02005592	Torsion Spring	1	27	738-04360	Shoulder Screw, .375 x 2.00 x 5/16-18	1
12	02005606	Brake Cable, LH	1	28	741-04371	Flange Bearing .375 ID x .875 OD	4
13	02005607	Brake Cable, RH	1	29	750-05071	Spacer, .319 x .375 x 1.056	2
14	02005612	Brake Carriage Assembly	1	30	750-05072	Spacer, .384 x .500 x 1.00	1
15	603-04639	Pedal Assembly, Brake	1	31	750-05178	Spacer, .38 ID x .50 OD x .955	2
16	02005703	Roller Guide Brake Bracket	2				

Decal Map

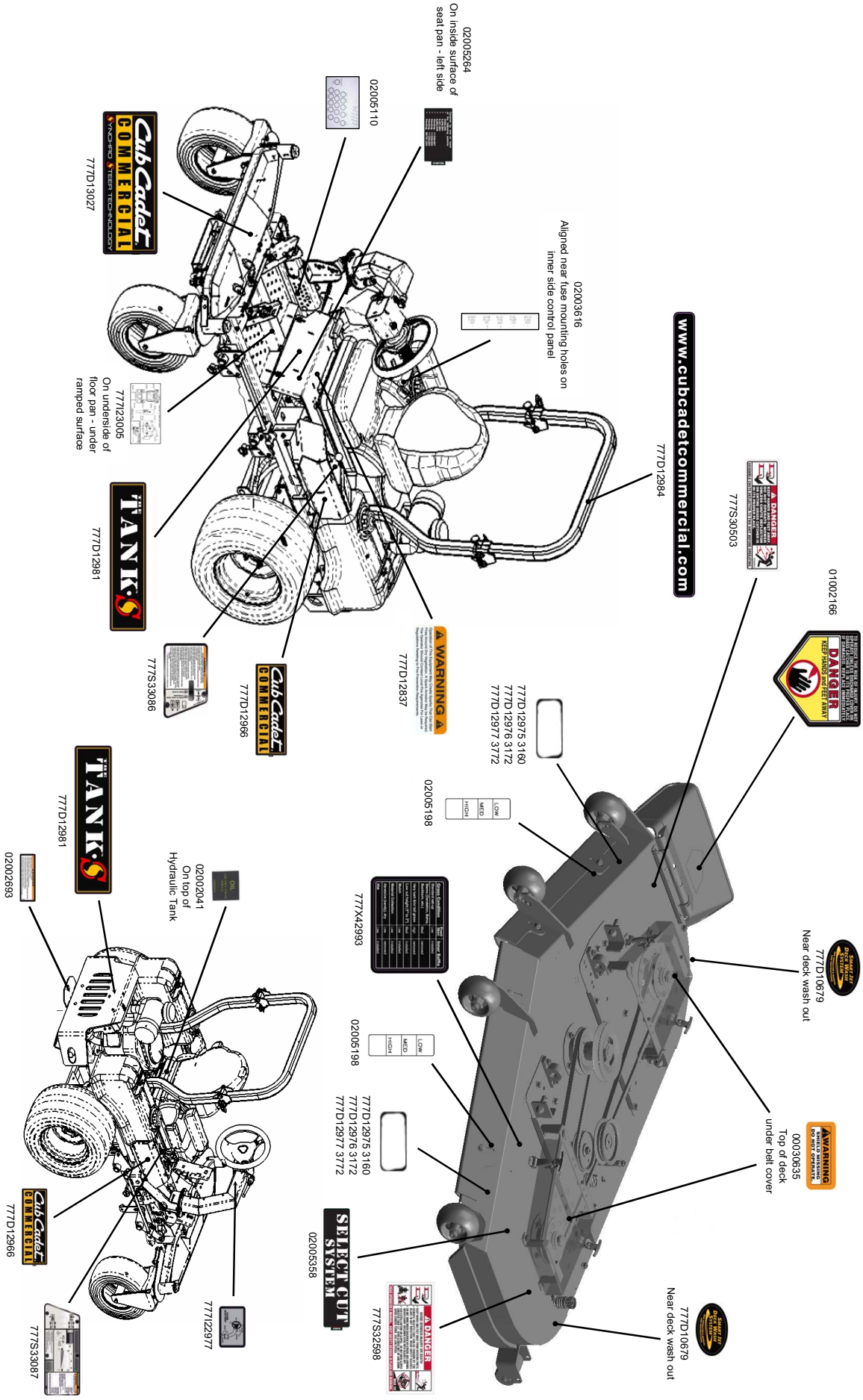
01002166
777S30503
777D10679
Near deck wash out
00030635
Top of deck
under belt cover
777D10679
Near deck wash out
777S32598
02005358
777D12975 3160
777D12976 3172
777D12977 3772
02005198
777X42993
777D12975 3160
777D12976 3172
777D12977 3772
02005198
777D12837
777D12966
777S33086
777D12981
02005264
On inside surface of
seat pan - left side
02005110
777D13027
02003616
Aligned near fuse mounting holes on
inner side control panel
777D12984
www.cubcadetcommercial.com
777I23005
On underside of
floor pan - under
ramped surface
777D12981
02002693
02002041
On top of
Hydraulic Tank
777D12966
777I12977
777S33087

This Page Intentionally Left Blank



Cub Cadet Commercial
P.O. Box 368023
Cleveland, OH 44136

Form No. 02005362 Rev. 09-4 02/17/2009