Cub Cadet
COMMERCIAL

Commercial Zero-Turn Riding Mower

Professional Turf Equipment

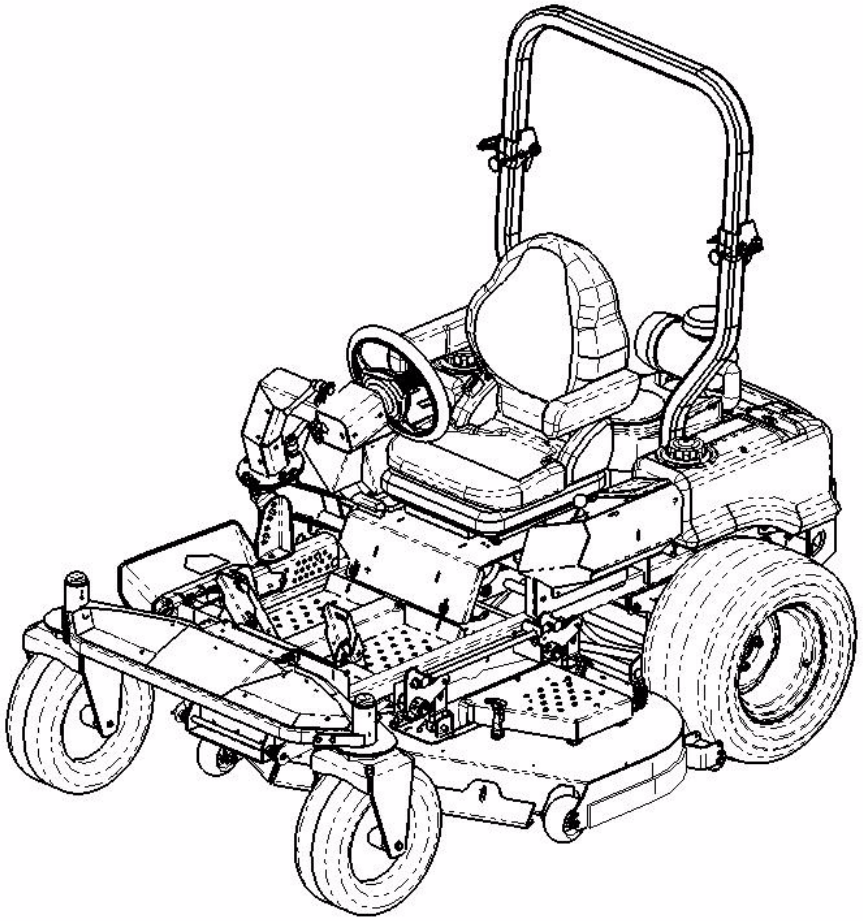

THE TANK™
S6031

THE TANK™
S7237

OPERATOR'S AND SERVICE MANUAL

TABLE OF CONTENTS

Foreword . . . 3
General Safety Operations . . . 4
- A. Danger . . . 4
- B. Warning . . . 4
- C. Caution . . . 4

Safety Precautions . . . 4
- A. General . . . 4
- B. Related to Fuel . . . 5
- C. Related to Batteries . . . 5
- D. When Mowing . . . 5
- E. Towing . . . 6
- F. Operator Protection System - Foldable . . . 6
- G. Suspension Seat . . . 6
- H. Steering Control . . . 7
- I. Hydraulic Devices and Systems . . . 7

Safety Decals . . . 9
Specifications . . . 10
Operating Instructions . . . 11
- A. General . . . 11
- B. Controls . . . 12
- C. Initial Adjustments . . . 13
- D. Zero Turn Break-In and Operating Procedures . . . 14
- E. Mower Cutting Blades . . . 16

Maintenance and Service . . . 17
- A. Mower Deck . . . 17
- B. Hydraulic Oil . . . 18
- C. Electrical System . . . 19
- D. Tires . . . 21
- E. Brakes . . . 22
- F. Hydraulic System . . . 22
- G. Storage . . . 23

Maintenance Schedule . . . 25
Performance Adjustments . . . 27
- A. Engine RPM Check and Adjustment . . . 27
- B. Deck Corner Ball Wheel Roller Settings . . . 27
- C. Deck Center Anti-Scalp Roller Settings . . . 27
- D. Steering Wheel Adjustment . . . 27
- E. Deck Leveling Procedure . . . 27
- F. Adjustable Front Skirt . . . 28
- G. Removable Flow Control Baffles . . . 28

Wiring Diagram . . . 29
Reconfigurable Mower . . . 30
Slope Gauge . . . 31
Warranty

This product may be covered by one or more of the following patents:
D409,208; 5,946,894; 6,070,690; 6,301,864; 6,662,538 Pending

FOREWORD

The Tank Hydrostatic Zero-Turn Synchro-Steer Commercial Riding Mower provides superb maneuverability, mid-mount cutting capability for professional landscapers, commercial lawn service companies, professional turf managers and golf course superintendents. The machine incorporates many safety features that should be studied by all operators and maintenance personnel before use. The list of safety precautions should receive particular attention.

This manual presents all of the operating and maintenance instructions necessary to keep your mower at peak efficiency. If operated and maintained properly, your mower will give dependable service.

⚠ CAUTION:

Only thoroughly trained persons should operate and maintain this mower. This machine can cause serious injury to anyone who misuses it and does not understand its operation. For their personal safety, all operators and maintenance personnel are required to read this entire manual before operating the mower.

Hazard control and accident prevention are partially dependent upon the design and configuration of the equipment. Notwithstanding, these factors are also dependent upon the awareness, concern, prudence and proper training of the personnel involved in the operation, transport, maintenance and storage of the equipment.

⚠ WARNING-For the State of California

- The engine exhaust, some of its constituents, and certain vehicle components contain or emit chemicals known to the State of California to cause cancer, birth defects or other reproductive harm.
- This unit is equipped with an internal combustion engine and should not be used on or near any unimproved forest-covered, brush-covered, or grass-covered land unless the engine's exhaust system is equipped with a spark arrester meeting applicable local or state laws (if any). If a spark arrester is used, it should be maintained in effective working order by the operator.
- In the State of California, the above is required by law (Section 4442 of the California Public Resources Code). Other States may have similar laws. Federal laws apply to federal lands. A spark arrester muffler may be available.

⚠ WARNING-For the State of California

- A person shall not sell, offer for sale, lease, or rent to a person any equipment that is powered by an internal combustion engine subject to Section 4442 or 4443, and not subject to Section 13005 of Health and Safety Code, unless that equipment has a permanent writing label attached that is in plain view to the operator that states, 'WARNING-Operation of This Equipment May Create Sparks That Can Start Fires Around Dry Vegetation. A Spark Arrestor May be Required. The Operator Should Contact Local Fire Agencies For Laws or Regulations Relating to Fire Prevention Requirements.'

NOTE: The engine manufacturer is responsible for all engine-related issues with regards to performance, power-rating, specifications, warranty and service. Please refer to the engine manufacturer's owner's/operator's manual, packed separately with your unit, for more information.

MODELS LISTED IN THIS MANUAL

THE TANK™ S6031
53AI8DU6050

THE TANK™ S7237
53AI8DU8050

GENERAL SAFETY OPERATIONS

A. DANGER

1. Do not operate machine in confined areas where exhaust gases can accumulate.
2. Do not operate machine without mower chute deflector in place and operational.
3. Do not carry passengers.
4. Do not operate nor store machine in areas where open flames, electrical switches and circuit breakers are present.

B. WARNING

1. Do not operate machines under the influence of alcohol or drugs.
2. Do not operate machines without all guards and safety devices in place and functional.
3. Do not start machines if there are fuel or oil leaks or spillage — clean it up.
4. Do not operate machines near spilled or leaking fuels.
5. Do not stop or park machine over dry leaves, grass, debris, etc. that could be combustible.
6. Use extreme care when backing up.
7. Do not operate machine on slopes greater than 20 degrees (36%).
8. Do not operate machines on slopes when traction is reduced (wet grass, ice, soft ground, loose ground, leaves, pine needles, debris, etc.).
9. Avoid turning downhill if possible, go slowly and use extra care when turning downhill.
10. Do not operate machines during reduce visibility (low light, fog, rain, etc.).
11. Do not operate machines with non-approved attachments.
12. Do not operate machines that are damaged.....have machine repaired.
13. Do not operate machines that have not been properly maintained.
14. Use only replacement parts that are the same or equivalent to the original equipment.
15. Do not modify machines or any of their components, especially the engine governor!
16. Do not operate machine for more than 2 hours without hearing protection.

C. CAUTION

1. Use proper protective equipment when operating machine (gloves, boots, and hearing protection are recommended).
2. Read entire machine Operator's Manual.
3. Make sure operators are fully trained in the safe use of the machine.
4. Follow all safety instructions when using the machine.
5. Keep all safety signs legible and properly installed.
6. Do not check for hydraulic leaks with any part of the body.
7. Do not add fuel to a machine when the engine is running and/or the exhaust system is hot.
8. Keep machine clean and free of debris, grass, leaves, oil, grease, etc.
9. Place speed control pedals in the neutral position, set park brake, disengage P.T.O., turn engine off, and remove ignition key before you dismount from machine.
10. Use machines laterally or diagonally across slopes, avoid going downhill when possible.
11. Go slowly and use extra care when descending slopes.
12. Disengage P.T.O. when crossing surfaces such as asphalt, concrete, loose ground, sand, gravel, etc.
13. Use extra care when loading and unloading machines from trucks or trailers.
14. Equipment driven on public roads must comply with state & local ordinances, SAE J137, and ANSI/ASABE S279.

SAFETY PRECAUTIONS

A. General

1. Read this Operator's Manual before starting the mower. Study the controls and learn the proper sequence of operation.
2. Do not allow anyone to operate or maintain this machine who has not read this manual. Never permit children to operate this machine.
3. Never carry passengers.
4. Do not remove any shields, guards or safety devices. If a shield, guard or safety device is damaged or does not function, repair or replace it before operating the mower.
5. Always wear safety glasses and safety shoes when operating or maintaining this mower. Do not wear loose-fitting clothing.
6. Disconnect the spark plug wires and remove the key from the ignition to prevent the engine from accidentally starting before performing any maintenance on this mower.
7. Never run the engine indoors without adequate ventilation. Exhaust fumes are deadly.
8. To avoid serious burns, do not touch the engine, exhaust pipe or muffler while the engine is running or until it has cooled after it has been shut off.
9. The liquid in the battery is dilute sulfuric acid. Always wear safety glasses and rubber gloves when working on the battery. Do not overfill the battery.
10. Lead-acid batteries generate hydrogen and oxygen gases which form an explosive mixture. Keep sparks and flames away at all times.
11. When looking for oil leaks, never run your hand over hydraulic hoses, lines or fittings. Never tighten or adjust hydraulic hoses, lines or fittings while the system is under pressure. If high-pressure oil penetrates the skin, the oil must be

removed within a few hours by a doctor familiar with this form of injury or serious complications may result.

B. Related to Fuel

1. Fuel is highly flammable and its vapors can explode if ignited. Please respect it.
2. Do not smoke or permit others to smoke while handling fuel.
3. Always use approved containers for fuel and fill slowly to decrease the chance of static electricity buildup and spillage.
4. Store fuel in well ventilated and unoccupied buildings away from sparks and flames.
5. When dispensing gasoline into approved containers, place the container on the ground when refueling to avoid a possible static electricity ignition of fuel vapors.
6. Do not fill containers while it is inside a vehicle, trunk, the bed of a pickup or floor of a trailer.
7. Always shut off the engine and permit it to cool before removing the fuel tank cap.
8. Always fill the fuel tank outdoors away from sparks and flames.
9. If the fuel container spout will not fit inside the fuel tank opening, use a funnel.
10. When filling the fuel tank, stop when the fuel reaches one inch from the top. This space is necessary for fuel expansion. **Do not overfill**.
11. Wipe up any spilled fuel.
12. Do not use gasoline fuel classified above E-10 (I.E., E-15 through E-85) as it could cause severe damage to the engine and fuel system.

C. Related to Batteries

Batteries are stored electrical energy devices that may be serviceable with removable caps (the electrolyte levels can be checked), or may be non-serviceable (no attempt should be made to open the vents).

Batteries may contain lead (Pb) and sulfuric acid, and they must be re-cycled and not disposed of nor abandoned. Sulfuric acid can cause severe burns, and in the event of contact, the areas should be flushed with water and a physician contacted. Battery cases should not be punctured. Lead is poisonous and is contained within the positive and negative terminals as well as within the battery's internal grid-work of plates and active materials.

Explosive gases are generated when batteries are re-charged, so sparks, flames and heat sources should be avoided. Loose connections at the battery terminals can produce sprks and heat...connections to the terminals must be kept tight, and the terminals and battery surfaces kept clean of acids and corrosion. If batteries are re-charged or "jumped" from external sources, make sure that the connections are made properly and in the correct sequence...connect to the positive terminal of the good battery first, then connect that to the positive terminal of the weak battery. The third connection should be to the negative terminal of the good battery, followed by the negative terminal of the weak battery. If sparks are observed or heating of the wiring or connectors is detected, disconnect in reverse order (I.E., the negative terminal of the weak battery first). Batteries should be re-charged at a constant voltage...generally 14.5 +/- 0.5 volts DC for a nominal 12 volt DC battery.

D. When Mowing

1. Keep adults, children and pets away from the area to be mowed.
2. When operating this mower in the forward direction, do not allow the speed control pedals to rapidly return to Neutral. Always operate the pedals smoothly and avoid any sudden movements when starting or stopping.
3. If the mower is equipped for side discharge, never use the mower without the discharge chute installed and placed in the down position.
4. Always remove debris and other objects from the area to be mowed.(**Note**: debris and loose grass will reduce traction.)
5. Mow only in daylight.
6. Watch for holes, sprinkler heads and other hidden hazards.
7. Avoid driving too close to trees, creeks, ditches, sand traps and other obstacles.
8. Before backing up, check behind you and watch where you're going.
9. Always reduce speed when making a turn, and when grass is wet.
10. Always mow laterally or diagonally across slopes, never up and down the slope. Do not operate on steep (greater than 20 degrees, 36%) slopes and slow down before turning.
11. Be careful when crossing gravel paths or roadways. Always turn off the blade clutch switch and wait until the blades stop rotating and raise the cutting deck to the transport position. Always allow other vehicles to have the right-of-way.
12. If you hit a solid object while mowing, turn off the blade clutch switch, place the speed control pedal in the neutral position, move the throttle to slow, set the parking brake, shut off the engine and take the key from the ignition switch. Inspect for damage. Repair any damage. Make sure the blades are in good condition and that the blade bolts are tight before restarting the engine.
13. Never leave the mower unattended without: turning off the blade clutch switch; placing the speed control pedals in the neutral position; moving the throttle to slow; setting the parking brake; shutting off the engine and taking the key from the ignition switch.
14. Never walk or stand on the discharge side of a mower with the engine running. Turn off the

blade clutch switch if another person approaches while you are operating the mower.

15. Never attempt to operate the traction unit without the mowing deck attached.
16. Keep the mower and especially the engine and hydraulic components clean and free of grease, grass and leaves to reduce the chance of fire and to permit proper cooling.

E. Towing

1. Tow only with a machine that has an approved hitch designed for towing. Do not attach towed equipment except at the hitch point.
2. Follow the manufacturers recommendation for weight limits for towed equipment and towing on slopes.
3. Never allow children or others in or on towed equipment.
4. On slopes, the weight of the towed equipment may cause loss of traction and loss of control.

   Note: 5 degrees (9%) maximum slope.
5. Travel slowly and allow extra distance to stop.

F. Operator Protection System -Foldable

1. This machine is equipped with an Operator Protective System (OPS), which includes:
   a. A Roll Over Protective Structure (ROPS) or Operator Protective Device (OPD) which may be of the fixed or folding configuration
   b. Seat belt assembly with retractable function
2. ROPS and OPDs are structures designed to provide a crush-resistant space for the operator when properly seat-belted within the designated seating area of the machine in the event of a machine tip-over or roll-over. Folding ROPS and OPDs shall be used in their fully upright and locked configurations except in those circumstances whereby they need to be momentarily folded-down to avoid contact with items such as tree limbs, clothes lines, guy wires, buildings, etc. At other times and conditions, ROPS and OPDs shall be in their fully upright and locked configurations.

⚠ DANGER:

Damaged ROPS and OPDs must be replaced prior to operator use!

3. Seat belts shall be used and shall be properly fastened about the operator's waist at all times, except when the ROPS or OPDs are:

   - not properly installed and/or not properly secured onto the machine

   - damaged in such manner that their structural integrity has been compromised

   - not in their fully upright and locked position
4. Seat belts are attached to the movable portion of the seat, and therefore the seat-mounting the pivot means must be latched to the frame of the machine.

⚠ DANGER:

If ROPS and OPDs are folded down or missing, seat belts shall not be fastened. Worn or damaged seat belt assemblies must be replaced prior to operator use.

5. Brush Guards and canopies can afford additional protection for the operator. The Brush Guard can deflect tree limbs, clothes lines, and other obstacles that otherwise could come in contact with the ROPS and OPDs. Contact of ROPS and OPDs by items such as tree limbs, clothes lines, guy wires, and buildings, could create hazardous conditions whereby the machine could experience a tip-over or roll-over. The canopy can provide protection for the operator from some environmental exposure (sunlight, rain, etc.). Work lights may be available.
6. The ROPS and seat belt are integral parts of this machine and should not be tampered with, modified in any manner, or removed.
7. The ROPS extends above and behind the operator position, and therefore the operator must be aware of potential contact of the ROPS with items such as trees, buildings, doorways, clothes lines, utility wires, etc., that could cause the machine to upset or rollover....use caution in (or avoid) areas where the ROPS could come in contact with any structures, trees, etc.
8. The ROPS and seat belt add additional mass that elevates the machine's Center of Gravity (C.G.) which negatively affects the machine's stability and traction....use extra caution when operating on slopes.
9. Inspect the ROPS and seat belt assemblies on a regular basis for damage and improper operation....replace all components that are damaged or are not functioning properly with authorized replacement parts.
10. Failure to use the seatbelt properly could result in serious injury or death if an accidental overturn occurs. In order for the ROPS to be effective, the seat belt must be securely fastened around the operator at all times when the operator is on the machine. Contact with the ROPS during an overturn could cause serious injury or death.
11. The ROPS will not prevent the machine from upsets or roll overs.
12. Only approved attachments should be used on this machine.

G. Suspension Seat

1. This unit is equipped with an adjustable suspension seat system, which includes a seat with retractable seat belt assembly, a low profile

mechanical suspension, and an Operator Presence Sensor (OPS).

2. The seat bottom is covered with a heavy-duty vinyl fabric. An OPS in the form of a switch, is integrated into the seat bottom and is connected to the machine electrical system. The seat back is also covered with a heavy-duty vinyl fabric, it adjusts to recline up to 16 degrees, (lever actuated on operator's left side). The armrests are adjustable for operator comfort (knob inside armrests actuated from the bottom). Roller bearing single-locking tracks provide easy repositioning fore/aft over 8" (lever actuated on lower right).
3. A mechanical suspension mechanism incorporates weight/ride adjustment controls for operators in the 125 to 275 lb. weight range, pull upward on the fold-out lever and "pump up" to increase seat load capacity and firmness. Push the lever downward to reduce the firmness and load capacity. Just center the orange-colored indicator to achieve your exact weight setting.
4. A retractable seat belt assembly with inertia-lock is attached to the "ride" portion of the seat frame. When the seat latch is released, the complete seat assembly and seat base can be pivoted forward - this provides access to the battery, hydraulic reservoir and filter, as well as some of the electrical system and control linkages. The seat base must be latched prior to machine operation.

Note: The seat base must be secured by latching, otherwise, the seat assembly could tilt forward. The Operator Presence Sensor must be connected to the electrical wiring harness.

H. Steering Control

1. This machine has an adjustable Steering column. It can be adjusted rearward/upward or forward/downward by repositioning the column. See Figure 1 below.

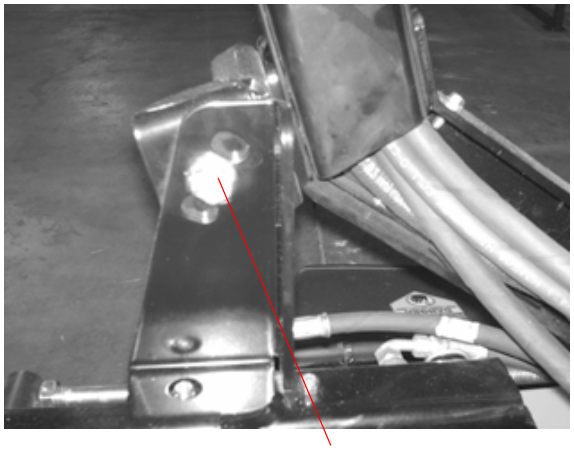

Figure. 1

2. The Steering wheel has an adjustable tilt feature so that the steering wheel can be infinitely adjusted to individual needs. An adjustable handle is used to release or apply clamping action that secures the tilt steering wheel in the desired position. The handle incorporates a "ratchet" feature to allow the handle to be positioned as desired. See Figure 2 below.

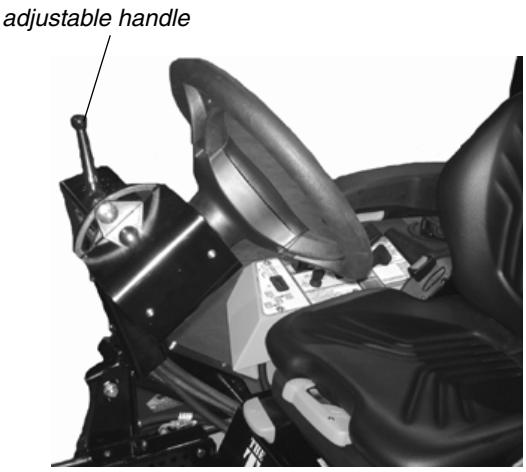

Figure. 2

3. The Steering column also has a swing-away function to enhance entry and egress. A ratchet-type adjustable handle is used to release or tighten the steering column which will allow it to swing away or swing back. See Figure 3 below.

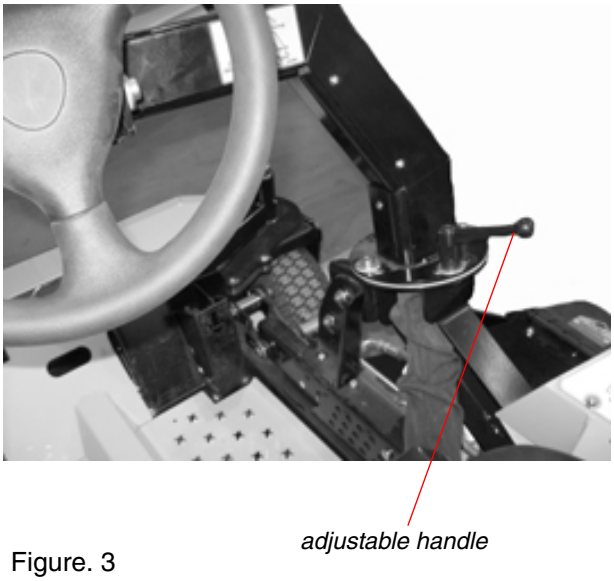

Figure. 3

I. Hydraulic Devices and Systems

Hydraulic fluid escaping under pressure may have sufficient force to penetrate skin and to cause serious imjury. If foreign fluid is injected into the skin, it must be surgically removed within a few hours by a doctor familiar with this form of injury, or gangrene may result.

Warning: Keep body and hands away from pinholes or nozzles that could eject hydraulic fluid under high pressure. Use paper or cardboard, not hands, to search for leaks!

Safely relieve all pressure in the system before performing any work on the system, and make sure that:

- the ignition switch is OFF
- the key is removed
- the engine sparkplug wire(s) removed
- all connections to the negative terminal of the battery are removed
- the park brake is set
- all by-pass valves, if so equipped, are open
- hydraulic controls are actuated to release pressure on pumps, cylinders, etc. If “float” positions are available, they should be used.

After the above operations are completed, it should be safe to begin disconnecting the lines or components. It is still a good idea to cover the connection with a cloth shield and then gently loosen connections.

Warning: Make sure all hydraulic fluid connections are tight and all hydraulic hoses and lines are in good condition before applying pressure to the system.

SAFETY DECALS AND LABELS



Part Number: 00030635



Part Number: 01002166

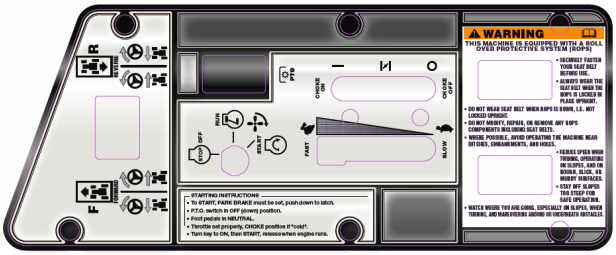

Part Number: 777S33087



Part Number: 777S30503



Part Number: 777D12837

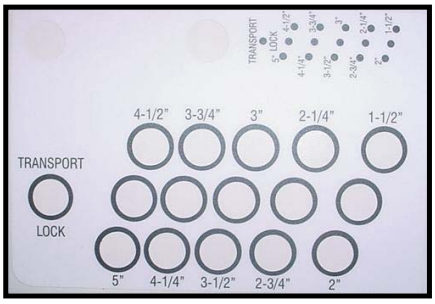

Part Number: 02005110



Part Number: 777S32598

⚠ WARNING!

- Maximum weight on hitch is 50 lbs.
- Maximum towed load is 500 lbs.
- Never allow passengers on towed equipment.
- Loss of traction can occur on slopes, 5° (9%) maximum grade.
- Travel slowly and allow extra distance to stop.
- Use caution during turns to avoid jack-knifing.
- Use extra caution when operating in reverse.
- Do not modify hitch or repair hitch. Replace hitch if damaged.

Part Number: 02002693



Part Number: 777S33086

SPECIFICATIONS

GENERAL INFO.	
Controls:	Engine ignition and start switch; throttle; choke; speed control pedals; electric blade clutch switch; parking brake; mower deck lift
Steering:	14” diameter steering wheel coupled to hydraulic steering valve and cylinder
Parking Brake:	Mechanical linkage brake to internal drum brakes
Seat:	Adjustable seat and armrests. 7" Adjustment (fore-aft)
Frame:	2" Steel structural tube and plate, all welded construction
Instrumentation	Hour meter, Tachometer, Maintenance-minder
Front Wheels:	60”, & 72” deck, 16 x 6.50 - 8
Drive Wheels:	60", & 72” deck, 24 x 12 - 12
Tire Pressure:	10-12 psi Rear, 20-25 psi Front
Fuel Tank:	Two 6.5 gallon w/individual shutoff valves
Ground Speed:	0-12 + MPH forward. 0-5 MPH reverse
Net Weight:	1470 lbs. w/60" deck, 1540 lbs w/72” deck

ENGINE INFO.	
Engine:	31HP Kawasaki w/ 60” deck, 37 HP Kawasaki w/ 72” deck
Type:	Vertical crankshaft air cooled V-Twin
Air Cleaner:	Dual Paper Element with rain cap
Lube System:	Pressurized with oil filter
Hydraulic System:	In tank filter, 6 quart capacity, aluminum oil cooler w/ 12VDC fan
Starter:	12-volt electric
Blade Brake Clutch:	Electric

TRACTION DRIVE INFO.	
Traction Drive:	Engine to two variable-output hydraulic pumps each connected to individual wheel motors

CUTTER DECK INFO.	
Cutter Deck;Drive:	60", & 72” Belt Driven with Reconfigurable features
Deck Lift:	Hydraulic w/pin lock for height adjustment
Cutting Height:	1" to 5" in 1/4” increments
No. of Blades	3, belt-driven, power take-off from engine

OPERATING INSTRUCTIONS

Figure. 4

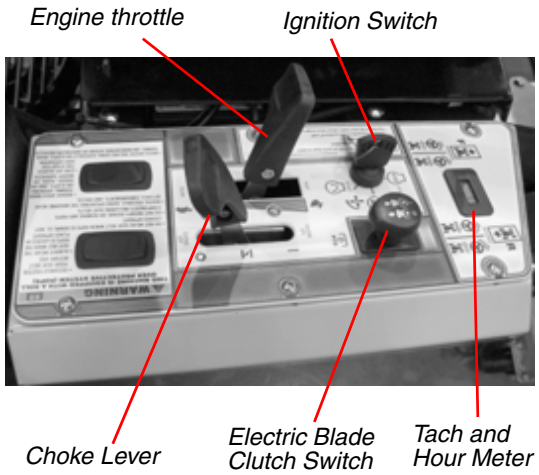

Figure. 5

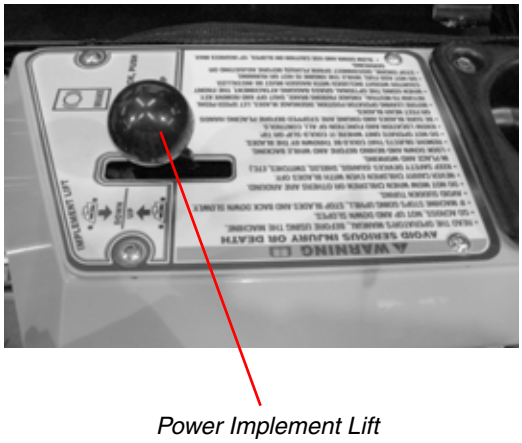

A.General

1. When Mowing:

a. Keep adults, children, and pets away from the area to be mowed.

b. When operating this mower, in the forward direction, do not allow the speed control pedals to rapidly return to Neutral. Always operate the pedal smoothly and avoid any sudden movements when starting and stopping.

c. If the mower is equipped for side discharge, never use the mower without the discharge chute installed and placed in the down position.

d. Always remove debris and other objects from the area to be mowed (Note: debris and loose grass will reduce traction).

e. Mow only in daylight.

f. Watch for holes, sprinkler heads, and other hidden hazards.

g. Avoid driving too close to trees, creeks, ditches, sand traps, and other obstacles.

h. Before backing up, check behind and watch where you are going.

i. Always reduce speed when making a turn, and when grass is wet.

j. Always mow laterally or diagonally across slopes, never up and down the slope. Do not operate on steep (greater than 20 degrees 36%) slopes and slow down before turning. Avoid turning downhill if possible, start at the bottom and work up to the top. Use extra care and go slowly when turning downhill.

k. Be careful when crossing gravel paths or roadways. Always turn off the blade clutch switch and wait until the blades stop rotating and raise the cutting deck to the transport position. Always allow other vehicles to have the right of way.

l. If you hit a solid object while mowing, turn off the blade clutch switch, place the speed control pedals in the neutral position, move the throttle to slow, set the parking brake, shut off the engine, and take the key from the ignition switch. Inspect for damage. Repair the damage. Make sure the blades are in good condition and that the blade bolts are tight before restarting the engine.

m. Never leave the mower unattended without observing the following: turn off the blade clutch switch, placing the speed control pedals in the neutral position, moving the throttle to slow, setting the parking brake, shutting off the engine and taking the key from the ignition switch.

n. Never walk or stand on the discharge side of the mower when the engine is running. Turn off the blade clutch switch if another person approaches while you are operating the mower.

o. Never attempt to operate the traction unit without having the mowing deck attached.

p. Keep the mower and especially the engine and hydraulic components clean and free of grease, grass, and leaves to reduce the chance of fire and permit proper cooling.

2. Safety Awareness when Mowing

a. Do not operate on steep slopes, those above 20 degrees (36% slope).

b. Avoid turning downhill if possible, if not use extra care and go slowly.

c. Avoid turning when going downhill, traction is at a minimum going downhill.

d. Do not operate with discharge side of the mower toward streets, buildings, playgrounds, parking lots, other machines, animals, and other people.

e. Avoid operation or use extreme care if the traction surface is wet, unstable, or slippery.
f. Use extra care when grass clippings, leaves, pine needles, or debris are present as traction can be reduced.
g. Slow-down before turning and come to a complete stop before any zero turn maneuver.
h. Do not stop machine or park machine over combustible materials such as dry grass, leaves, debris, etc.

3. To Mow Grass and Produce a Striped Pattern

a. Pick a point on the opposite side of the area to be mowed (post, tree, shrub, etc.).
b. If on an hillside, start at the bottom so that the turns are uphill rather than downhill.
c. Align the mower so as to head directly toward the object on the far side.
d. Slowly increase the speed of the machine to match cutting conditions, terrain, and operator familiarity with the controls and keep the machine headed directly toward the alignment object. Do not go fast as to reduce cut quality or to be uncomfortable in controlling the speed and direction of the machine.
e. When approaching the other end of a strip, slow down or stop before turning. A U-turn is recommended unless a zero turn is required. The speed of a U-turn that will allow for machine controllability and minimal turf defacement will be dependent on several factors including: the speed of the turn, the radius of the turn, the tire tread pattern, the traction coefficient of the tire to the traction surface, the slope of the traction surface.
f. Remember, a zero turn requires that the forward or reverse travel of the machine be stopped prior to the initiation of the turn or severe turf defacement can occur.
g. To prevent rutting or grooving of the turf, change the direction that the strips are mowed by approximately 45 degrees the next and each subsequent time that the area is mowed.

B.Controls

1. **Engine Ignition and Start Switch:** (See Figure 4.) Located on the instrument housing below the right side of the operator's seat. When the key is inserted and turned clockwise, 45 degrees, the ignition circuit is closed. Turning the switch further against spring pressure starts the engine. The engine will only start if the blade clutch switch is in the "off" position, the parking brake is engaged and the speed control pedals are in their neutral position. The key should always be removed from the switch if the operator leaves the mower's seat.
2. **Engine Throttle Control:** (See Figure 4.) Located on the right side of the mower next to the operator's seat. Moving the throttle control from the rear to the front will increase the engine speed from slow to fast.
3. **Speed Control Pedals:** (See Figure 6.) The pedals control all of the speed and direction movements of the mower. Pushing the forward pedal causes the mower to move forward. Pushing the reverse pedal causes the mower to move backward.

   In order to start the engine, the speed control pedals must be in the neutral position; the parking brake must be engaged; and the blade clutch switch must be "off". However, once the engine starts, the parking brake must be released before the operator moves the speed control pedals, since they are interlocked.

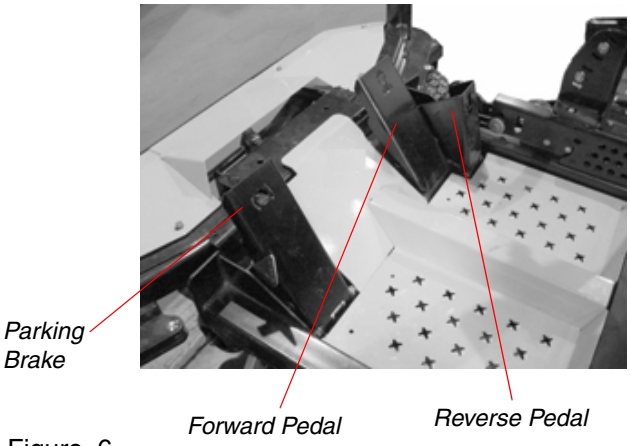

Figure. 6

Note: The speed control pedals will return toward neutral when released.

4. **Electric Blade Clutch Switch:** (See Figure 4.) Located on the right side of the mower beside the ignition switch. This is an "on/off" push pull switch that controls the electric blade clutch which supplies power to the cutting blades through the PTO. The switch must be turned off to start the engine and should be turned off for safety any time another person approaches the mower or the mowing deck is raised to the transport position. Power to the electric clutch will also be cut off if the operator leaves the operator's seat.
5. **Parking Brake:** (See Figure 6.) Located on the left side of the traction unit. The Park brake pedal applies the drum-type brake on each of the drive wheels when the pedal is pushed. The park brake must be engaged in order to start the engine. **To engage**, push the latch on the side of the pedal and the pedal downward until it latches. **To release**, push the pedal downward (not the latch) and release.
6. **Power Implement Lift:** (See Figure 5.) Located on the left control panel, a lever controls a hydraulic valve which activates a hydraulic cylinder which lifts the implement (usually the mower deck). For changing implement height, at least

one hand is required to reposition the pins to provide 1/4” height-of-cut increments.

The mechanism includes: A hydraulic cylinder that is used to raise the implement. A height adjustment link and index provide predetermined height for the implement - it is settable in 1/4” increments; a lock position for the height adjustment link settable by the pin in the highest (also transport position) or lowest (also for mower deck removal and installation).

The following features are incorporated into the hydraulic actuated valve implement lift design: Lever implement lift allows for some operators with physical limitations to use the implement lift mechanisms and the machine; reduces potential for operator fatigue; accommodates a variety of operator sizes, shapes, and strengths.

7. **Fuel Shutoff Valve:** (See Figure 7.) Located on top of the fuel tank(s). When turned in a clockwise direction until it stops, it will shut off the flow of fuel to the engine. When turned in a counterclockwise direction it will open and allow fuel to flow to the engine. Close this valve if you are not going to run the mower for a period of 30 minutes or more to prevent flooding the engine.

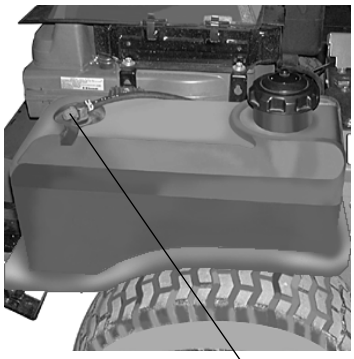

Figure. 7 *Fuel Shutoff Valve*

8. **Seat Adjustment Lever:** The Seat Adjustment Lever is located beneath the seat. The Seat Adjustment Lever is used to move the seat forward and backward. To place the seat in the desired position pull the seat adjustment lever to the left then push the seat forward or back to the desired position. Release the lever so the seat will lock in place.

Note: Please refer to Section G on pages 6 and 7 for more information regarding the Suspension Seat

9. **Digital Tachometer and Hour Meter:** (See Figure 4) Located on the right side of the mower in front of the ignition switch. When the machine is running the tachometer displays engine rpm. When the machine is off the tachometer displays running time.

Note: There will be a flashing “LUBE” for each recommended lubrication interval. There is a flashing “OIL” at each recommended engine oil and filter change.

10. **Choke Lever:** (See Figure 4) The Choke Lever is located on the right instrument panel next to the seat. The Choke Lever is operated manually. Having the Choke Lever in the ON position helps the engine to start during initial start-up. During normal operation the Choke Lever should be in the OFF position.

Note: The Tanks equipped with E.F.I. do not have a choke control.

C.Initial Adjustments

1. Check the fluid levels and tires:

Note: These checks should be made daily, before starting the engine.

a. **Fuel:** Using a good grade of unleaded, regular gasoline (for a gasoline engine), fill the fuel tank (beside the engine on the left or right side of the mower). When the fuel reaches one inch from the top of the tank, stop. DO NOT OVERFILL. Space must be left for expansion.

b. **Engine Oil:** (Filled at the factory before shipment.) Pull out the oil dipstick, wipe it off and reinsert it. Pull it out again and read the oil level. If it is below the operating range, add oil through the fill tube using a funnel to bring it up to the top of the operating range.

Note: Gasoline Engine: Use SAE 10W30 or SAE 10W40 engine oil, rated for service SJ. Shell Rimula 15W40 is also recommended and provides service SL and CI-4 plus.

c. **Hydraulic Oil:** (Filled at the factory before shipment.) The hydraulic oil tank is located beneath the operator’s seat. Always wipe off the area around the oil tank fill neck before checking the oil level to prevent dirt from contaminating the oil. Remove the cap and make sure the oil level is a 1/4” below the oil tank fill neck. If the oil level is low, fill with Shell Rimula 15W40 or equivalent oil. Equivalent oil should meet GM Allison C-4.

d. **Tires:** 10-12 psi Rear, 20-25 psi Front

Note: New tires are overinflated in order to properly seat the bead to the rim. The normal working pressure for the traction tires is 10-12 psi. The front wheels should be inflated to 20-25 psi.

2. Check that all Nuts, Bolts and Screws are Tight.

3. Check the tension of the deck drive belts.

a. Remove the deck cover

b. The tension of the deck drive belts are maintained by a spring mechanism that adjusts for wear and stretch.

c. Examine the belts for cuts, fraying, and excessive wear. Replace if any of these are detected.

d. Replace the deck cover.

4. **Adjust the Mowing Deck:** The cutting height is set anywhere in the range of 1" to 5". You may need to adjust the mowing deck to achieve the proper pitch angle for mowing. Follow the procedures below to set the appropriate angle to the mowing deck.
   a. Park the mower on a flat paved surface, engage the parking brake, shut off the engine, remove the key from the ignition switch, remove connection of the spark plugs and lower the mowing deck into the cutting position.
   b. Using a ruler, pencil and paper, measure and note the distance from the paved surface to the bottom edge of the mowing blade at the front and the back of the deck on each side of the mower. (Four dimensions.)

Note: The front edge of the mowing deck should be 1/8"-1/4" below the rear edge of the deck so that the blades are cutting grass in only the front half of their circular path. This decreases friction and reduces the drive power required.

   c. If the cut height is below 1-1/2” the pitch should not exceed 1/16”. If the dimension at the front of the mowing deck is 1/8"-1/4" lower than the dimension at the rear of the deck on each side of the mower, do not adjust. If not, you will need to adjust the Deck Lift Link (See Figure 8). You may also need to adjust the Deck Links (See Figure 8).

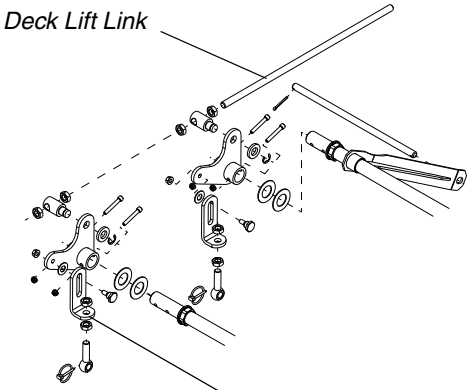

Figure. 8

Note: The pitch should not exceed 1/16” if the cut height is below 1-1/2”.

   d. Lower the mower deck to the cutting position. With a wrench loosen the inner rear nut on the Deck Lift Link. To adjust the deck up or down, use a wrench and with a few turns, adjust clockwise or counter clockwise the outer rear nut of the Deck Lift Link. Repeat this procedure on the opposite side of the Mower. Once the deck is adjusted, retighten bolts.
   e. With the deck still in the cutting position, adjust the Deck Links. With a wrench loosen the top inner bolt of the Deck Link. To adjust the side of the deck up or down turn the top bolt clockwise or counter clockwise a few turns. Adjust both front and rear Deck links as necessary. Retighten nuts.
   f. Raise the mowing deck to the transport position using the upper foot pedal.
   g. Use the second foot pedal to lower the mowing deck to the cutting position and repeat step “b.” above to make sure that the desired cutting height has been attained. If the dimensions are not correct, repeat steps “c.” through “f.” above.

5. **Lubricate all fittings listed in the maintenance section.**

D. Zero Turn Break-In And Operating Procedures

⚠ DANGER:

Reread the “When Mowing” Safety Precautions.

The following procedures are suggested for operators of ride-on machines which have zero turn capabilities.

1. **Orientation:**
   a. Read the entire Operator’s Manual.
   b. Sit on the machine, adjust the seat position front to rear, then adjust the seat back recline, then adjust the arm rests. Swing the Steering column inward and lock with the adjustable ratchet handle. Finally, adjust the Steering wheel tilt with the adjustable ratchet handle.
   c. Become familiar with all of the machine controls, instrumentation, safety and instruction signs, and safety devices.
   d. Move (or have moved) the machine to a safe, level area with no obstructions including objects, pedestrians, and animals.
2. **Initial Operation:**
   a. Use protective equipment for eyes, hands, hearing, feet, legs, head and other areas of the body if needed — safety eye glasses, gloves, earplugs, boots, hats, etc.

⚠ WARNING:

Hearing Protection is required for all operator exposure exceeding two (2) hours.

   b. Ensure that the area is free of animals and bystanders, especially children!
   c. Survey the area where the equipment is to be used to make sure it is free of debris, sticks, stones, wires, bones, and other foreign objects which could cause injury to bystanders, damage to the machine, or damage to nearby facilities.

d. Inspect the machine to make sure:
   1. All guards, shields (including mower chute deflector) are in their proper place, are secure, and are functional.
   2. That there are no spilled or leaking fuel or oil sources, nor loose fuel or hydraulic tank caps, hoses or fittings.
   3. That there are no loose or missing hardware nor any missing items.
   4. That no non-approved devices are installed.
   5. That all safety signs and decals are properly installed and legible.

e. This is a one person machine, operator only! Riders are not permitted under any circumstance!

f. To start the engine on the machine:
   1. Make sure the park brake is set to the "ON" position, the speed control pedals are in the neutral position, and the Power Take Off (PTO also referred to as blade control switch) is in the "off" (down) position.
   2. Move the choke control forward and the engine speed control (throttle) forward (half way).

Note: E.F.I. Tanks do not have a choke control.

   3. Insert the ignition key, turn the switch toward the spring-loaded "Start" position, maintain the Start position until the engine begins to run, then release the switch (it will return to the "Run" position).
   4. Retard the choke slowly by moving it rearward. If the engine is "cold", the choke may need to be partially applied for a few minutes. Be sure to totally retard the choke after the engine has "warmed up".

g. Check safety devices:
   1. With the park brake engaged, gently try to move the speed control pedals (speed/directional control) from the neutral/start position — they should not move.
   2. With the park brake engaged and the speed control pedals in the neutral/start position, advance the engine speed control completely forward (Hi-idle), engage the PTO control switch (pull upward), then lift off the seat — the engine should stop running. Sit down and the engine should run. Turn off the PTO by pushing the control switch down.

h. To drive in the FORWARD direction:
   1. Set the engine speed to 2000 to 2500 rpm (refer to tachometer on right control panel). This must be increased to full speed (3525-3675 rpm) after becoming familiar with the machine.
   2. Release the park brake.
   3. Slowly, push the forward speed control pedal until the machine begins to move forward — release the pedal and the machine should stop moving. The more that the forward speed control pedal is depressed, the faster the machine will move in the forward direction. Release the forward speed control pedal, and the machine should stop traveling forward.
   4. Do not advance the forward speed control pedal rapidly as this could cause turf defacement, loss of traction, and/or instability.
   5. To turn, turn the steering toward the direction of desired travel — I.E. to turn clockwise (to the Operator's Right), turn the steering wheel clockwise, and to turn counter-clockwise (to the Operator's LEFT), turn the steering wheel counter-clockwise. NOTE: If the steering wheel is turned so that the inside wheel is angled approximately 88 degrees a "pivot turn" will be executed — turf defacement could occur (if on grass) as well as potential damages to the traction surface and the tire. If the inside wheel turns less than 88 degrees the turn side tire will continue to rotate and a "U-turn" will be executed with a low potential for turf defacement as well as traction surface and tire damage. If the steering wheel is turned completely one way, a zero-turn will be executed.

i. To drive in the REVERSE direction:
   1. Make sure no bystanders, animals, or objects are behind the machine. Look behind the machine, and use extreme care.
   2. Slowly, push the reverse speed control pedal until the machine begins to move rearward. Release the pedal and the machine should stop. The more the pedal is depressed, the faster the machine will move in the reverse direction. Release the pedal and the machine should stop traveling in reverse.
   3. Do not retard the reverse speed control pedal rapidly as this could cause turf defacement and/or loss of traction.
   4. To turn, turn the steering opposite the direction of the desired travel — I.E., to turn counter-clockwise (to the Operator's LEFT), turn the steering wheel clockwise, and to turn clockwise (to the Operator's RIGHT), turn the steering whel counter-clockwise. NOTE: If the steering wheel is turned so that the inside wheel is angled 88 degrees, the turn side tire will not rotate and a "pivot turn" will be executed. Turf defacement could occur (if on grass) as well as potential damages to the traction surface and the tire. If the inside wheel is not turned 88 degrees,

then the turn side tire will continue to rotate and a “U-turn” will be executed with a low potential for turf defacement as well as traction surface and tire damage.

j. To perform a “zero turn”:
   1. Please note, a zero turn maneuver can be executed while the machine is moving in the Forward or, Reverse directions, if the steering wheel is turned completely in the one direction.
   2. To turn clockwise when going forward, turn the steering wheel clockwise and depress the forward speed control pedal. Release the pedal and the machine should stop turning. If the reverse pedal is depressed, the turn will be counter-clockwise.
   3. To turn counter-clockwise, turn the steering wheel counter-clockwise and depress the forward speed control pedal. Release the pedal and the machine should stop turning. If the reverse pedal is depressed, the turn will be clockwise.

3. Start the Engine:

a. Open the fuel shutoff valve.
b. Sit on the Seat. Set the parking brake “On”.
c. Make sure that the speed control pedal is in the neutral position.
d. Turn the electric blade clutch switch “Off”.
e. Push the throttle control to a position a third of the way between slow and fast.
f. Insert the key in the ignition and start switch and turn the switch to “On”.
g. Gasoline Engine: If the engine is cold, push the choke to the on position.

Note: E.F.I. Tanks do not have a choke control.

h. Turn the ignition key in a clockwise direction to the “Start” position until the engine starts.

Note: Do not hold the key in the “Start” position for more than 10 seconds or you may damage the starter. If the engine does not start in this time, wait about 30 seconds and try again.

i. Gasoline Engine: Once the engine starts, push the choke on halfway and as the engine warms, push the choke off all the way.

4. **Operating the Mower:** Operating a zero-turning-radius synchro-steer mower is like operating a tractor-type riding mower. The zero-turning-radius synchro-steer mower is much more maneuverable and much less fatiguing to operate. However, getting used to the control of the zero-turning-radius mower takes some practice. We strongly recommend that you locate a “test area” where you can operate the mower for about 30 minutes without being disturbed.

a. Get into the operator’s seat.
b. Start the engine.
c. Use the hydraulic valve lever to raise the mowing deck to the transport position. Make sure the blade clutch switch is off.
d. After the engine has warmed, adjust the throttle to the fast position.
e. Release the parking brake.
f. To go forward, depress the forward speed control pedal slightly and the mower will slowly move forward. The farther you depress the pedal, the faster the mower will go forward.
g. To back up, depress the speed control pedal slightly backward and the mower will slowly move backward. The farther you move the pedal backward the faster the mower will go backward.
h. To turn, turn the steering wheel in the direction which you want to turn. The more the steering wheel is turned, the faster and more sharply you will turn. Initially, you will have to be careful to avoid turning too fast and too far.
i. After you have mastered operating the mower, use the hydraulic valve lever to lower the mowing deck to the cutting position (place pin in any of the 1/4” height settings) and pull on the electric blade clutch switch to start the blades rotating.
j. Practice mowing in straight passes. When you feel confident, slowly practice mowing around obstacles such as trees.

5. Parking the Mower:

a. Push off the electric blade clutch switch.
b. Use the hydraulic valve lever to raise the mowing deck to the transport position.
c. Drive the mower to the cleanup or storage area.
d. Move the throttle to slow.
e. Take your foot off the speed control pedal.
f. Set the parking brake.
g. Turn off the ignition switch and take the key from the switch.
h. Close the fuel shutoff valves.

E.Mower Cutting Blades

The blades normally “factory installed” on a mower afford the best grass cutting performance on the majority of grasses and mowing conditions; however, there will be occasions whereby the grass type, stage of grass growth, soil conditions, and weather conditions will require different cutting blade types. Since the mower decks are designed so that over-lap of the cutting blades generally exceed 1.5”, there is no need for orientation of

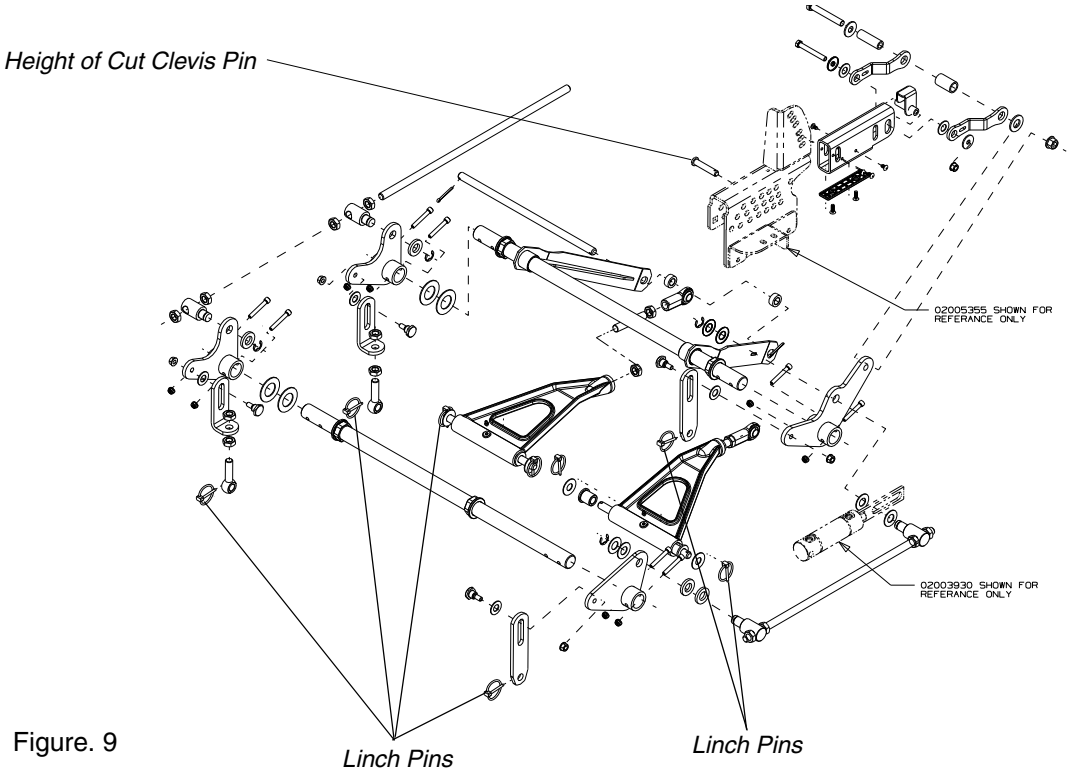

Figure. 9

one cutting blade to an adjacent blade (I.E., the blades do not need to be “timed” nor synchronized).

Hi-lift- These are generally the best cutting blades for most grasses and mowing conditions. These blades will provide extra “lift” for the thinner leaf grasses, will handle lush grasses, and will provide maximum grass and debris discharge. These blades are generally required for material collection systems. More horsepower is required for these blades when compared to others, and they generally produce the highest noise levels.

Medium-lift- These blades require less horsepower than the hi-lift, and they generally work well in wider leaf grasses and some mulch applications.

Low-lift- These blades require less horsepower than hi-lift and medium-lift blades, and they generally work best with wide leaf grasses, sparse grass growth, and sandy soil conditions. They generally produce the lowest noise levels. Bahia blades are configured without offset, and with a maximum amount of sharpened cutting edge.

Mulch- These blades are generally designed for use in cutting decks equipped with mulch baffles. The shape of the blade generally produces higher turbulence in order that the grass can be repeatedly cut and re-cut into smaller pieces. These blades generally require more horsepower than other blades. Mulch blades work best when the grasses are cut at the highest levels, minimal lengths of grasses are removed, and grass conditions are generally dry.

MAINTENANCE AND SERVICE

⚠ WARNING:

Disconnect the spark plug wires or remove the key from the ignition to prevent the engine from accidentally starting before performing any maintenance on this mower.

A. Mower Deck

1. Removing the Mower Deck:

a. Apply the parking brake. Remove ignition key and both spark plug caps.
b. Lower the cutter deck to the ground. Place the height of cut clevis pin in the “lock” position.
c. Remove tension of the PTO belt by moving the belt tensioning rod.
d. Detach the mower drive belt.
e. Remove six linchpins (See Fig. 9) (4) from the deck and (2) from the front of the mower. Remove the linchpins on the left and right rear side of the cutter deck (2); remove the linchpins on the left and right front side of the cutter deck (2); and remove the linchpins on the front of the mower (2).
f. Turn front wheels as if to make a pivot turn.
g. Shift the deck toward the operator’s left side of the mower and remove.
h. To install reverse the process.

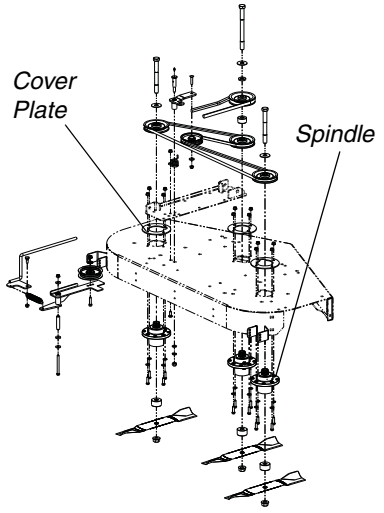

Figure. 10

2. Changing a Blade:

a. Remove the Key from the ignition and disconnect the spark plug.
b. Jack up the front of the mowing deck about one foot and block it in that position.
c. Wrap a rag around one end of the blade and grasp it to prevent it from turning, or secure the blade by placing a block of wood between the blade and the deck housing.
d. Use a 1-1/8" socket wrench on the pulley side of the spindle to secure.
e. Remove the hex nut using a 1-1/8" wrench.
f. Remove the hex nut.
g. To replace the blade reverse the above process and tighten nut to 100-120 lb ft.

⚠ WARNING:

Never mow with dull blades! Blades that are bent should be replaced! The cutting blades are sharp and can cause severe injury. Wrap the cutting surface of the blade with a rag to avoid injury. A dull blade requires more horsepower than one that is sharp.

3. Sharpening a Blade.

a. Set the parking brake.
b. Clean any debris from the blades. Keep blades sharp and free of build up at all times.
c. Sharpen blades evenly at the original 30° angle to maintain balanced cutting blades. Do not sharpen the underside of the blades. Use a electric blade sharpener, a conventional electric grinder or a hand file to sharpen the blades.
d. Replace any blade with severe nicks or dents that cannot be removed by filing.
e. Check the balance of the blade after sharpening by placing it on a blade balancer. Do not use un-balanced blades.
f. If the blade dips on one end, file stock off of the cutting surface on that end.

Note: Blades that cannot be easily balanced—REPLACE.

4. Changing the Blade Spindle Drive Belts:

a. Set the parking brake. Remove ignition key and both spark plug caps.
b. Unscrew the wing nuts from the deck covers and remove both covers.
c. Using a 1/2" socket breaker bar or socket rachet insert the male end into the 1/2" opening in the lower idler arm assembly and pull the idler arm clockwise. While holding the idler arm back, loosen the blade drive belt from the pulley and slide the belt away from the pulley.
d. Remove tension of the PTO belt by moving the belt tensioning rod. Loosen the belt retaining bolt.
e. Pull the tensioner pulley away from the belt and remove the PTO belt then remove the blade drive belt.
f. Reverse the process to install the belt.

Note: When replacing belts do not overtighten. Adjust the idler pulley so that a ten-pound pull with a spring scale between two pulleys deflects the belt about 1/2".

5. Changing the Spindle Assembly

a. Jack up the front of the mowing deck about one foot and block it in that position.
b. Make sure the blade clutch is disengaged.
c. Remove the deck cover.
d. Remove the drive belts. (See 4. Changing Blade Drive Belts.)
e. Remove the cutter blade. (See 2. Changing a Blade.)
f. Using a wrench or socket rachet remove four hex nuts, and the four hex head cap screws. Remove the spindle assembly.

B.Hydraulic Oil

⚠ WARNING:

Never overfill the hydraulic units. Damage can occur if the oil level is not within the proper operating range.

Note: when adding hydraulic oil, do so in small quantities and recheck the oil level before adding more. It is important that you do not overfill the reservoir to allow for fluid expansion.

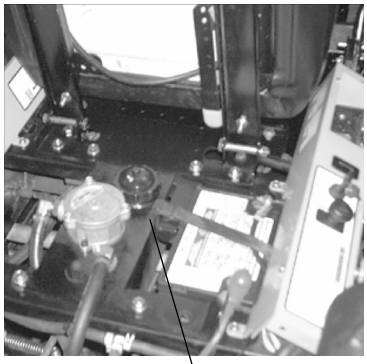

Figure. 11 *Hydraulic Tank*

1. Adding Hydraulic Oil (use Rimula SAE15W40)

a. Place the Mower on a level surface and engage the parking brake.

b. Stop the engine and remove the key from the ignition switch.

c. Clean the area around the Hydraulic Oil fill neck.

d. Remove the hydraulic fill cap and check the level. The correct level is a 1/4" below the oil tank fill neck.

e. Pour hydraulic oil into the reservoir a 1/4" below the oil tank fill neck and 1.5 ounces of Ornite additive, if necessary.

2. Draining Hydraulic Oil

Used hydraulic oil must be disposed of properly. Do not pour it down a drain or sewer, or dump it on open land, this creates an environmental hazard. Please be aware of the environment when disposing of used oil.

a. Place the Mower on a level surface and engage the parking brake.

b. Stop the engine and remove the key from the ignition switch.

c. Remove the mower deck. See section on Mower Deck.

d. Raise the seat forward to expose the hydraulic oil fill point.

e. Clean the area around the hydraulic fill oil cap.

f. Remove hydraulic fill oil cap.

g. Place a suitable container (at least 1 gallon) under the hydraulic reservoir and filter.

h. Remove the hydraulic filter to allow hydraulic oil to drain. Remove the drain plug from the bottom of the hydraulic oil tank to drain. Replace the plug.

i. Place a small pan under the pump motor frame. Remove fill oil cap from hydraulic reservoir for faster drainage. Remove nut caps and drain oil from both left and right pumps. Replace and retighten nuts.

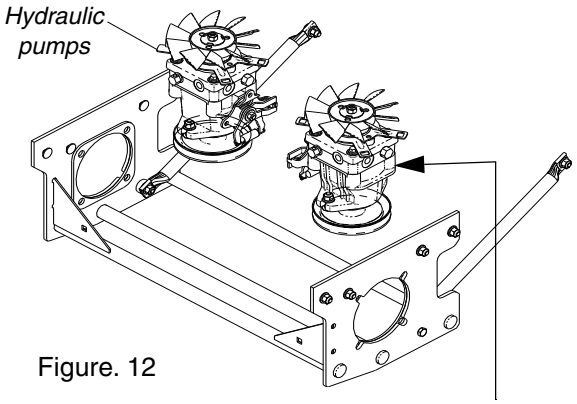

Figure. 12

j. Remove the three screws from the top of the oil filter and replace the oil filter element. Coat the sealing surface with Shell Rimula 15W40 oil or equivalent. Install the three screws back into the oil filter.

k. Add proper amount of hydraulic oil to reservoir. Use Shell Rimula 15W40 or equivalent with 1.5 ounces of Ornite additive.

l. Run and purge gearboxes. Check oil level.

m. Add proper amount of hydraulic oil to reservoir and repeat step L.

C.Electrical Circuit

⚠ Danger:

Read General Safety Precautions Nos. 9 and 10.

1. **Battery:** The battery is located beneath the operator's seat. Remove the fillcaps and check the level of the liquid electrolyte in the battery every 50 operating hours. If the level in any of the six cells has dropped below the bottom of the split ring inside the fill hole, refill the cell with distilled water. To keep the outside of the battery clean, brush on a strong solution of bicarbonate of soda and water and rinse with clean water. Keep the contacts and cable ends clean with a wire brush and make sure the connections are tight. Coat the terminals with petroleum jelly to prevent corrosion.
2. **Battery Storage:** When storing the Mower for long periods of time the following guidelines should be taken.
   a. Disconnect the battery cables from the terminals and remove the battery. You will have to remove the control panel to access the battery strap. Replace control panel.
   b. Clean the battery before storing. A dirty battery will lose its charge over time.

c. Store the battery with a full charge. A discharged battery will freeze (refer to the table below)

Specific Gravity	Freezing Temp (°F)
1.265	-71
1.250	-62
1.200	-16
1.150	5
1.100	16

d. Recharge battery when ever the specific gravity value is less than 1.225

3. Battery Removal

⚠ Warning:

When removing the cables from the battery follow these steps to avoid a short between the wrench and the frame.

a. Remove the Negative (black) cable.
b. Remove the Positive (red) cable.
c. Release the hold down straps.
d. Remove the battery without tipping.

4. Installing the Battery

Note: The battery is delivered from the factory fully charged and filled with electrolyte.

a. Attach the Positive (red) cable.
b. Attach the Negative (black) cable.
c. Attach the rubber battery strap.

5. Jump Starting

⚠ Warning:

Note: For E.F.I. Tanks, the battery must be disconnected (Negative lead) for storage exceeding four weeks. Do not "Jump Start" an E.F.I. unit, recharge or replace battery to avoid damage to the Electronic Control Unit (ECU).

Failure to use this starting procedure can cause sparking, and the gases in the battery to explode.

a. Attach the end of the red jumper cable to the Positive terminal (+) of the charged battery.
b. Attach the other end of the red jumper cable to the Positive terminal (+) of the low charge battery.
c. Attach the end of the black jumper cable to the Negative terminal of the charged battery.
d. Attach the other end of the black jumper cable to the frame of the unit with the low charge battery.

6. **Fuses:** There is one fuse located in the wiring between the ignition and start switch and other electrical components. This is a standard plug-in type automotive fuse rated at 20 amp.
7. **Safety Switches:** There are three safety switches in the electrical circuit which control the engine. They are (1) the blade clutch switch, (2) the parking brake switch, and (3) the seat switch.They operate so that in order to start the engine, the blade clutch switch must be off, the parking brake must be engaged, and the speed control pedals must be in the neutral position. Once the engine is started, the seat must be occupied and the parking brake must be released before the speed control pedals can be moved. Also, the seat must be occupied before the blade clutch switch can cause the blades to rotate.
8. **Safety Switch Operation Checks:** The following operational checks should be made daily.
   a. **Blade Clutch Switch:** Sit in the operator's seat. With the speed control pedals in the neutral position and the parking brake engaged, turn the blade clutch switch "on" and try to start the engine. The engine should not start. If it does, the blade clutch switch must be replaced. If the engine does not start, turn the blade clutch switch "off" and start the engine. Now turn the blade clutch switch "on" and the blades should rotate. If the blades do not turn, the blade clutch switch must be replaced, the seat switch must be replaced or the electric PTO clutch must be repaired.

      The air-gap should be checked every 100 hrs. (or less, if severe operating conditions exist such as when there are many on/off cycles, mulching operations, material collection systems used, and dusty/dirty conditions), and the air-gap adjusted if more than 0.025". To inspect, remove the "negative" cable from the battery and all sparkplug wires. The air-gap should be checked with feeler gages in the three slots of the BBC (PTO Clutch). See page 25 for air gap adjustment specs. There are three inspection slots in the brake cover. To adjust, successively tighten each of the three gap adjustment nuts an equal amount. Insert a feeler gage (see page 25 for specs) into each slot as the air gap adjustment nut are tightened. The correct adjustment occurs when slight contact with the feeler gage occurs. Engage the BBC (PTO Clutch) a couple of times, and re-check the air-gap. If it is not between the specs listed on page 25, repeat the adjustment procedure.
   b. **Parking Brake Switch:** Sit in the operator's seat. With the speed control pedals in the neutral position and the blade clutch switch "off", release the parking brake and try to start

the engine. The engine should not start. If it does, the parking brake switch must be repositioned or perhaps replaced. If the engine does not start, engage the parking brake and start the engine.

c. **Seat Switch:** With the speed control pedals in the neutral position, the parking brake engaged and the blade clutch switch in the "off" position, start the engine. Now, while sitting in the seat, release the parking brake, then, raise up slightly off the operator's seat and the engine should stop. If the engine does not stop, the seat switch must be replaced. With the speed control pedals in the neutral position, the parking brake engaged and the blade clutch switch in the "off" position, sit in the operator's seat and start the engine. Turn the blade clutch switch to the "on" position and the blades should start to rotate. Raise up slightly off the operator's seat and the blades should stop. If the blades do not stop when you dismount from the operator's seat, the seat switch must be replaced.

d. **Electric PTO Clutch:** This clutch operates when the engine is running, the operator is in the operator's seat and the blade clutch switch is turned on.This electric clutch is a fairly trouble free device. If a problem develops and the blades do not turn, first check the 20 amp fuse in the yellow, 16-gauge wire between terminal "L" (for the Gasoline Engine) on the ignition switch and the hour meter and then investigate the wiring harness and the connections to the seat switch, the blade clutch switch and the electric blade clutch. Then check out the seat switch, the blade clutch switch and finally the electric blade clutch.

D.Tires

The two front wheels are steerable wheels that are synchronized to turn in coordination with the speed and direction of the rear wheel motors.

The two rear wheels are used to propel the Mower in the direction of input from the speed control pedals. Inflation pressure of the front and rear tires is important for traction and stability while the Mower is in operation. If the tire diameters are not equal between the tires, the Mower will pull to one side.

1. **Inflation Pressure:**
   a. Traction Tires—20 psi max; 10-12 psi recommended
   b. Front Wheel—25 psi max; 20-25 psi recommended
   c. Cutting Deck Ball Wheels—Solid Polyurethane.

Use the Following guidelines for maintaining the tires:

   a. Balance inflation pressure between the rear tires to help maintain straight travel (see tire side wall for proper inflation pressure).
   b. Keep the valve caps tightened to prevent air pressure loss.

2. **Leaking Tires:** When a flat tire occurs, repair or replace immediately. The normal procedure is to remove the wheel and replace it with a spare. Take the leaking tire to a maintenance area and repair. If a tire is getting soft, park the mower on the nearest level, paved area. If the leaking tire is on a traction wheel, put blocks on each side of the opposite traction wheel and jack up the tire that leaks about an inch off the ground. Loosen and remove the lug nuts and remove the wheel. Mount a spare wheel and tire, replace the lug nuts, and using a torque wrench, tighten them to 60 ± 10 ft-lbs.

   If the leaking tire is on a front wheel, set park brake, block both traction wheels and raise the front wheel so that the tire is an inch off the ground. Loosen and remove the locknut from the axle assembly and pull the axle assembly from the yoke. The wheel and two spacer sleeves will drop free. Slip the axle assembly through one side of the yoke, through a spacer sleeve, a spare wheel, the other spacer sleeve and finally through the other side of the yoke. Then tighten the locknut on the end of the axle assembly.

   Lower the mower off the jack and continue mowing. The wheel with the leaking tire should be taken to the maintenance area, the tire inflated to 20 psi and the wheel placed in a large bucket of water. Carefully inspect the tire, rim and valve for escaping air bubbles which indicate a leak. Mark each leak with a yellow marking crayon and then deflate the tire to 8 psi and repeat the inspection. If the leaks you find are pin hole size to 1/16" diameter, the tire can be repaired using an aerosol can of tire inflater and latex sealer available from any auto supply store. Follow the directions on the can. If the leaks are larger than 1/16" diameter, the tire can be repaired with rubber plugs also available in a kit from any auto supply store. If the tire bead is damaged, a tube will have to be installed in the tire or the tire will have to be replaced.

3. **Creeping:** Creeping is the slight forward or backward movement of the mower when the throttle is on and the speed control pedal is in the neutral position. If your mower creeps, refer to speed control Adjustment Section F4, page 23.

E. Brakes

While the mower is in motion, all braking is performed dynamically through the hydraulic pumps and traction motors, controlled by the speed control pedals. If the brake pedal is pushed, it will return the forward and reverse pedals to neutral and add the drum brake force to the hydrostatic brake. When the mower is stationary with the engine running, the hydraulic system locks the traction wheels. If the engine is shut off, the park brake should be engaged. The park brake is engaged by pushing the pedal down and the latch lever until it latches. To release, push it a second time without pushing the latch lever.

Note: To move the mower forward or in reverse by pushing, you must release the dynamic braking. Locate the valves on the pump. Turn valves counter-clockwise (using a standard 7/16" wrench) one quarter turn to push the unit. After pushing the mower to the desired location, return both valves to the operating position by turning the valve clockwise, but do not overtighten(See photo below).

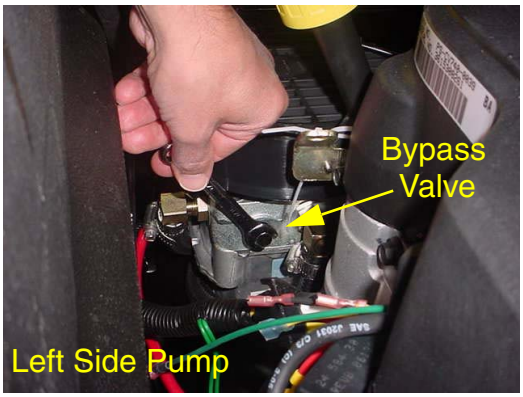

When the mower is parked with the engine running and the speed control pedal in the neutral position, the parking brakes should be applied. The parking brakes are drum-type brakes mounted on each traction wheel. They are both engaged by the same operating lever.

1. **Adjustments:** The parking brake pedal should engage with moderate force.

   Note: To increase parking brake capacity, adjust brake cables at the brake arms equally. Adjust the cable housing nuts one full turn and check parking capacity. Repeat if parking brake does not hold.

2. **Repair:** The mower is equipped with drum brakes and will not normally require maintenance. If they are not working properly, please contact your service center.

Note: The brake can be applied at anytime to function as a service or an emergency brake. When it is applied, the forward and reverse pedals will return to their neutral positions.

F. Hydraulic System

⚠ WARNING:

Never overfill the hydraulic units. Damage can occur if the oil level is not within the proper operating range.

Note: when adding hydraulic oil, do so in small quantities and recheck the oil level before adding more. It is important that you do not overfill the reservoir to allow for fluid expansion.

1. **Hoses:** Check the hoses from the hydraulic oil tank to the oil filter to the hydraulic lines daily for leaks or abrasion and replace any damaged hoses. Make certain there are no kinks or twists in any hose.
2. **Hydraulic Oil Tank and Filter:**

   Note: Change the hydraulic oil and the oil filter element after the first 50 hours of operation and every 500 hours thereafter.

To drain the hydraulic oil tank, place a 1 gallon drain pan under the drain plug on the bottom of the hydraulic oil tank. Remove the drain plug, drain the tank, then replace the plug. Remove the three screws from the top of the oil filter and take out the oil filter element You don't have to drain the rest of the hydraulic system. Put the replacement filter element in the oil filter and lubricate the sealing surface. Install the three screws in the top of the oil filter to secure the oil filter element. (See photo below)

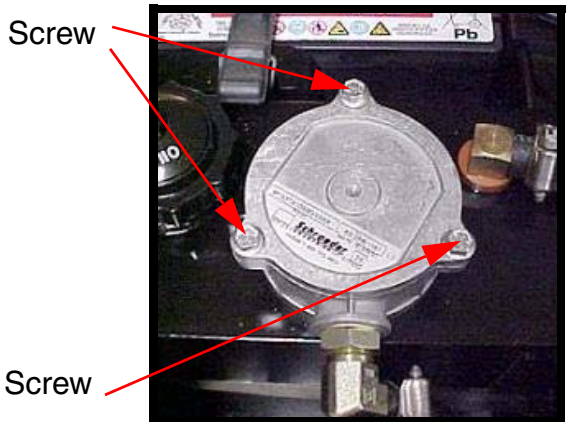

Note: Always wipe off the hydraulic tank fill cap and the area around it before removing the cap to prevent dirt from contaminating the oil.

Remove the fill cap and fill the tank with the same 15W-40 oil and 1.5 ounces of Ornite additive selected for the filter until the oil level is a 1/4" below the oil tank fill neck. Leave this air space for expansion. Start the engine and let it run at low idle for about five minutes. Check the filter for leaks. Idling the engine and the pumps in this way will purge any air from the system. Shut off the engine and recheck the oil level in the tank.

Top-off if necessary until the oil level is a 1/4" below the oil tank fill neck.

This unit is equipped with two traction drive pumps and one pump for steering and implement lift.

Note: After unit is up to operating temperature, turn off engine and re-check hydraulic oil. If oil appears foamy or contains excessive air bubbles, DO NOT OPERATE UNIT. Contact service technician.

3. **Hydrostatic Pumps and Motors:** The pumps are the hardest-working components in the hydraulic system. They are in operation all the time the engine is running. Because of extremely close tolerances, wear is an important factor in their life. ***Contaminants*** in the hydraulic oil and ***cavitation*** does the greatest harm to the pumps. Cavitation is a blockage in the supply lines that produces a partial vacuum causing violent bubbling in the hydraulic oil in the pump.

   Check the two suction hoses (the hoses connected to the filter) daily before starting the engine. Look for a flattened condition or any leaks and repair or replace as necessary. A flattened or leakng suction hose will permit cavitation to develop which can destroy the pumps in a short time.

   Contaminants or foreign matter in the oil will also damage the pumps . To prevent this, use a filter that captures particles as small as 25 microns or 25 millionths of a meter in diameter. You can help in the battle against dirt by being very careful when you remove or repair a component in the hydraulic system. Thoroughly clean off any component before you work on it. Plug the ends of any hose or line you remove with a rubber or plastic plug. Use plastic caps to seal off the ends of hydraulic fittings. Place any component you remove in a clean plastic bag so it can't pick up dust or dirt. Clean your hands frequently when working on the hydraulic components.

   Note: The pumps are not owner-repairable. If a pump fails, contact your Cub Cadet Commercial dealer. Do not disassemble the pump.

4. **Speed Control Adjustments:** The speed control pedal incorporates a Return-To-Neutral (RTN) feature to provide smooth, non-jerkey, control motion while affording an automatic hydrostatic braking means.

   Whenever the Park Brake is in the engaged position, a cable mechanism, connected to each drum brake on the hydrostatic wheel motors, applies force to each brake lever so that each wheel brake mechanism can prevent brake drum and wheel rotation.

   Note: The engine should be able to be started whenever the Park Brake is applied, and the speed control pedals are in Neutral.

   Whenever the machine is on level ground with the engine running and the speed control pedals are in the Neutral position, the machine should not creep (I.E., move in the Forward or Reverse directions of travel). If this occurs, contact your Service representative for the procedure to reset the RTN mechanism on the hydrostatic pumps. If the hydrostatic pump RTN is adjusted, the control linkage must also be readjusted.

G. Storage

1. **General:** If your mower will not be in service for a few months, it should be stored in a dry location that is not subject to drastic changes in temperature. Do not store in areas where heaters, furnaces, or electrical appliances are present. Before storing, the following maintenance procedures should be performed.

   Note: For E.F.I. Tanks, disconnect the negative lead of the battery for storage of 4 weeks or more.

   a. Clean the mower. The entire tractor and cutting deck should be washed and cleaned.
   b. Sharpen the blades so that the mower will be ready to use when needed.
   c. Protect the metal surfaces. Repair scratches with the appropriate touch-up spray paint. Brush a rust preventive oil on any unpainted surfaces including the pulleys and blades. (Be careful not to get any oil on the drive belts.)
   d. Lubricate the mower.
   e. Drain the engine oil. The engine should be warm so that all the oil drains. Replace the engine oil filter and refill the crankcase with fresh oil.
   f. Gasoline Engine: Drain all the fuel. Close the fuel tank shutoff valve. Disconnect the fuel line from the carbuetor and put the end into

an approved fuel container. Open the fuel tank shutoff valve and drain the fuel tank and line into the approved container. Replace the fuel line on the carburetor. Start the engine and allow it to run out of fuel. This will prevent gum and varnish deposits from forming. Replace the fuel filter.

g. Gasoline Engine Only: Remove the spark plugs and pour approximately one ounce of oil into each cylinder. Crank the engine one or two turns to spread the oil evenly on the cylinder walls. Replace the spark plugs.
h. Disconnect, clean and make sure the battery is fully charged.
i. Inspect the hydraulic hoses, lines and fittings. Replace as necessary.
j. Jack the mower up and store it on blocks to take the weight off of the tires.

2. To Put the Mower Back in Service:

a. Check the battery. Charge if necessary.
b. Gasoline Engine Only: Remove the spark plugs and wipe them off. Using the starter, crank the engine to pump the excess oil out of the spark plug holes. Replace the spark plugs and the ignition leads. Refill the fuel tank with fresh gasoline.
c. Check the level of the oil in the crankcase and the hydraulic tank.
d. Lower the mower off the block and check the tire pressure.
e. Push the mower outdoors and start the engine. Let the engine operate at low idle until it has warmed up completely (4 to 5 minutes).

MAINTENANCE SCHEDULE

A. Daily Checks

1. **Before starting engine:**
   a. Check the fuel level.**
   b. Check the engine oil level.**
   c. Check the hydraulic oil level.
   d. Check the hydraulic hoses for leaks, abrasion, kinks, twists, or a flattened condition.
   e. Check the tires and tire pressure.
   Drive Tires: 10-12 psi.
   Front Wheels: 20-25 psi.
   f. Check the spindle belt, the mower drive belt and the hydro drive belt.
   g. Check the blades. Make sure they are sharp and that the blade securing cap screws are tight.
   h. Check the cutting height.
2. **When ready to start the engine:**
   a. Check the three safety switches for proper operation.
3. **After mowing:**
   a. Clean the mower.
   b. Clean the engine air screen.
   c. Oil the wear points. Follow the Oiling Chart.
   d. After the first five hours, Change the engine oil and engine oil filter.

B. Every 25 Hour Checks

1. Service the engine foam element air precleaner.*
2. Grease the three spindle bearings.

C. Weekly or Every 50 Hour Checks

1. Change the engine oil. (Every 25 hours under heavy duty operation.)
2. Clean or replace the engine's paper air cleaner element.*
3. Check the battery's electrolyte level.
4. Clean the engine cooling fins and external surfaces.*
5. After the first 50 hours, change the hydraulic oil and the hydraulic oil filter. Change them every 500 hours thereafter. Use Shell Rimula 15W40 or equivalent and add 1.5 ounces of ornite additive.
6. Oil wear points. **Follow the Oiling Chart.**
7. Lubricate all grease fittings. **Follow the Lubrication Chart.**

D. Every 100 Hour Checks

1. Change the engine oil filter. (Every 50 hours under heavy duty operation.)
2. Check the engine spark plugs.
3. BBC (PTO Clutch) air gap should not exceed 0.025", if so, adjust as follows:
   Ogura JD08, DX-11, GT-1A, GT-2, GT-2.5, adjust to 0.012" - 0.015"
   Ogura GT-3, GT3.5, adjust to 0.015" - 0.022"

E. Yearly Checks

1. Check the oil in the hydraulic reservoir.

Engine coolant: Use only Shell Dex-cool, extended life anti-freeze diluted with water to create a 50:50 mixture.

Hydraulic fluid: Use Shell Rimula 15W40 oil and 1.5 ounces of Ornite additive.

Engine Oil: Use Shell Rimula 15W40 oil.

Spindle Lubricant: Use only Shell Alvania RL 2 grease. This grease is an amber-colored grease designed for high speed bearing applications. It has a base oil viscosity that reduces running losses, has been formulated for low noise, has excellent corrosion protection, and has excellent bearing lubrication.

General Purpose Lubrication: Use any NLGI grade 2 multi-purpose grease. Shell Albida EP2 is recommended. Shell Albida EP 2 is a red-colored multi-purpose grease designed for heavy-duty bearing applications. It has high base oil viscosity for mechanical stability, has been formulated for high load, low-speed applications, and has excellent lubrication and corrosion protection.

*** Perform maintenance more frequently under dusty conditions.**

****Reference Engine Owner's Manual**

.

OIL CHART

Apply a few drops of engine oil or use a spray lubricant. Apply the oil to both sides of pivot points. Wipe off any excess. Start engine and operate mower briefly to insure that oil spreads evenly.

Number of Oil Points	*Description*
DAILY	
4	Deck Suspension Pivots
4	Height Adjustment Turnbuckle Clevis Pin
2	Height Adjustment Handle Pivots
2	Height Adjustment Stop Pivots
2	Deck Lift Linkage Pivots
2	Transport Handle Pivots
1	Transport Handle Pin
2	Deck Frame Up-and-Down Pivots
WEEKLY	
1	Seat Hinge
2	Speed Control Linkage Rod End Bearings
2	Pump Control Lever Pivots
1	Brake Lever Pivot Clevis Pin
1	Brake Lever Control Rod Pivot
1	Brake Control Rod Swivel Joint
4	Brake Rod Clevis Pins
2	Brake Shaft Assembly Pivots
2	Grass Collection System Lid Hinges **(If Mower is so equipped)**

LUBRICATION CHART

Use a grease-gun filled with NO. 2 Multipurpose Lithium Base Grease

No. of Grease Fittings	*Description*
EVERY 25 HOURS	
3	Blade Spindle Bearings
WEEKLY	
2	Front Wheels
2	Front Wheel Spindles
4	Mowing Deck Pivots
2	Deck Take-Up Idler Pivots
1	Axle Pivot
2	Steering Lever Pivots
1	Hydro Take-up Idler Pivot
1	Park Brake Pivot
2	Mower Deck Ball Wheels

Performance Adjustments

A. Engine RPM Check and Adjustment

Description	High RPM Spec.	Low RPM Spec.
31 & 37 Kawasaki	3600 +/-50	1550 +/-100
NOTE: RPM Specs. are for free running engines under no load.		

1. Verify that the speed control pedals are in the neutral position, the parking brake is on, and the PTO drive is disengaged.
2. Start the mower and let it run at approximately half throttle for 3-5 minutes to bring the engine up to operating temperature.
3. Locate the Hour Meter/Tachometer/ Service Minder display on the right hand operator control panel. (See Fig.4 on page 11 of the manual) This display defaults to Tachometer mode when engine is running.
4. Move the throttle lever to the high speed position and note the RPM reading on the display.
5. Move the throttle lever back to the low speed position and again note the displayed RPM's.
6. Compare these noted RPM readings to the specifications in Table 1, for the engine that is on your mower.
7. If the readings do not correspond to the ranges in the table, refer to the engine owner's manual for the proper adjustment procedures.
8. If adjustments per the engine operator's manual do not result in proper RPM readings, contact your service technician.
9. Note: The throttle cable sheath may shrink or slip over time, changing the relationship between the throttle lever on the left hand operator control panel and the throttle arm on the engine. To readjust the throttle cable:
   a. Make sure the engine is off, and the speed control pedal is in the neutral position. Set the parking brake, and disconnect and ground both of the spark plug wires.
   b. Locate and loosen the cable clamp on the engine throttle plate.
   c. Place the operator's throttle lever to the high speed position and then slide the cable through the clamp until the throttle arm is in the full throttle position. (Ref. Engine owner's manual)
   d. Tighten the cable clamp.
   e. Move the operator's throttle lever between high and low speed and verify that the engine throttle arm also moves through it's full range of motion.
   f. Repeat as required to obtain proper throttle adjustment.
   g. Verify proper throttle adjustment by checking RPM readings as outlined above.

B. Deck Corner Ball Wheel Roller Settings

1. Matching the set heights of the ball rollers on the front and the four corners of the mower deck to the desired cut height will prevent edge scalping and minimize any side-to-side variance in cut height.
2. There are four height adjustment holes in the bracket that mount the ball rollers to the deck.
   a. Use the top set of holes for cut heights of 1 to 1-1/2 inches.
   b. Use the second set of holes for a 2 - 2-1/2 inch cut height.
   c. Use the 3rd set of holes for 3 - 3-1/2 inch cut height.
   d. Use the bottom set of holes for cut heights of 4 inches or higher.

C. Deck Center Anti-Scalp Roller Settings

1. The rear rollers help prevent the scalping of high spots and uneven terrain across the center section of the deck.
2. The rollers on the rear of the deck can be adjusted downward one inch.
   a. Lowering the roller will increase the striping effect left behind the mower.
   b. This positioning of the rear roller will also help to filter the mulched grass clippings into the turf.
   c. Roller should not be lowered if the cut height is set at 2-1/2 inches or lower.

D. Steering Wheel Adjustment

1. Proper steering wheel and seat adjustment will result in the following:
   a. In the neutral position with hands on the steering wheel,
      1. Operator's upper arms should be relaxed and approximately vertical.
      2. Operator's forearms should be approximately horizontal.
      3. Operator's back should stay in contact with the seat back.
      4. Steering column should not contact operator's legs.
2. The steering column can be repositioned forward/ downward or rearward/upward.
3. Set the seat to the preferred operating position.
   a. Adjustment lever is located under the front edge of the seat.
   b. The seat has over 8 inches of front-to-rear adjustment available.
4. Check the results of any adjustments to the conditions described in section a, above. Repeat any adjustment procedures as required until all conditions are met.

E.Deck leveling Procedure

1. Park the mower on a flat paved surface, engage the parking brake, shut off the engine, remove the

key from the ignition switch, disconnect the spark plug wires and lower the mowing deck into the 4" height of cut position. (The 4" height of cut position is recommended in order for one to see and obtain a measurement. Any height of cut position is acceptable as long as a proper measurement can be taken.)

2. Check the right and left front tire pressure. Adjust as necessary to 20-25 psi. Tire pressure can affect blade height by as much as a 1/4".
3. Check the right and left rear Drive tire pressure. Adjust as necessary to 10-12 psi.
4. Measure blade-to-ground height at the front tip of the right blade. To obtain an accurate measure, align blades in parallel with mower centerline, (i.e. front to back).
5. Measure blade-to-ground height at the front tip of the left blade. Be sure to measure at the blade tip with the blades arranged in proper position.
6. To level the deck, adjust the eyebolt at the left front of the deck (Point B) so that the blade-to-ground height at the right front blade tip matches that of the left front blade tip. This is done by loosening the jam nuts on the eyebolt and tightening the upper nut to raise the deck and loosening the nut to lower the deck. The right front blade tip height is fixed so you must adjust the left front tip to match it.
7. Measure the blade-to-ground height at the right rear blade tip. Again be sure to measure at the blade tip at the rear of the right blade when aligned along the mower centerline. The blade-to-ground height at the rear of the blade tip should be 1/8" to 1/4" higher than the front tip. This is referred to as blade pitch. The same height difference should be true for the left blade, measured front and back. The pitch should not exceed 1/16" if cut height is below 1-1/2".
8. To adjust the blade pitch the deck pitch must be adjusted. Loosen the inner jam nuts at the rear of the horizontal threaded rods. Start at Point C to raise the rear of the deck, tighten the rear outer jam nut to raise the deck pitch. Adjust the rear jam nut at Point D to take the "slack out of the threaded rod.
9. The final adjustment would be to take the "slack" out of the left rear linkage (Point D) by adjusting the jam nuts on the eyebolt. Loosen the jam nuts and tighten the upper nut to remove "slack".
10. In many cases it will be necessary to adjust deck height using both eyebolt adjustments and pitch adjustment to achieve the correct blade-to-ground heights. If you remember that the front right blade tip adjustment is fixed and you level to that height, adjusting the decks will be simplified.
11. Once the deck is level one may find that the height of cut does not match the height of cut indicator. A final adjustment may be made by lowering or raising the height of cut link accordingly. To raise the deck: remove the shoulder bolt mounting the height of cut link to the lift handle and reassemble the shoulder bolt in the lowest of the three holes. To lower the deck: remove the shoulder bolts mounting the height of cut link, flip the height of cut link around and reassemble the shoulder bolts in the top of the set of three holes and the bottom hole. (see Fig. 13)

F.Adjustable Front Skirt

1. Please refer to the reconfigurable mower chart on page 30.

G.Removable Flow Control Baffles

1. Please refer to the reconfigurable mower chart on page 30.

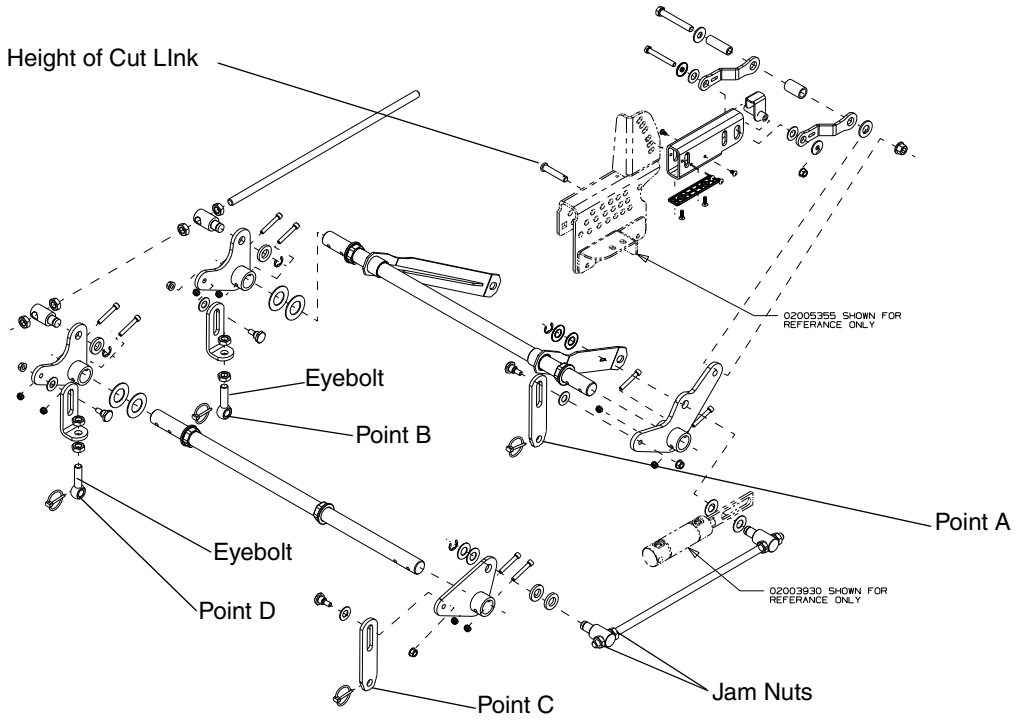

Figure. 13

WIRING DIAGRAM

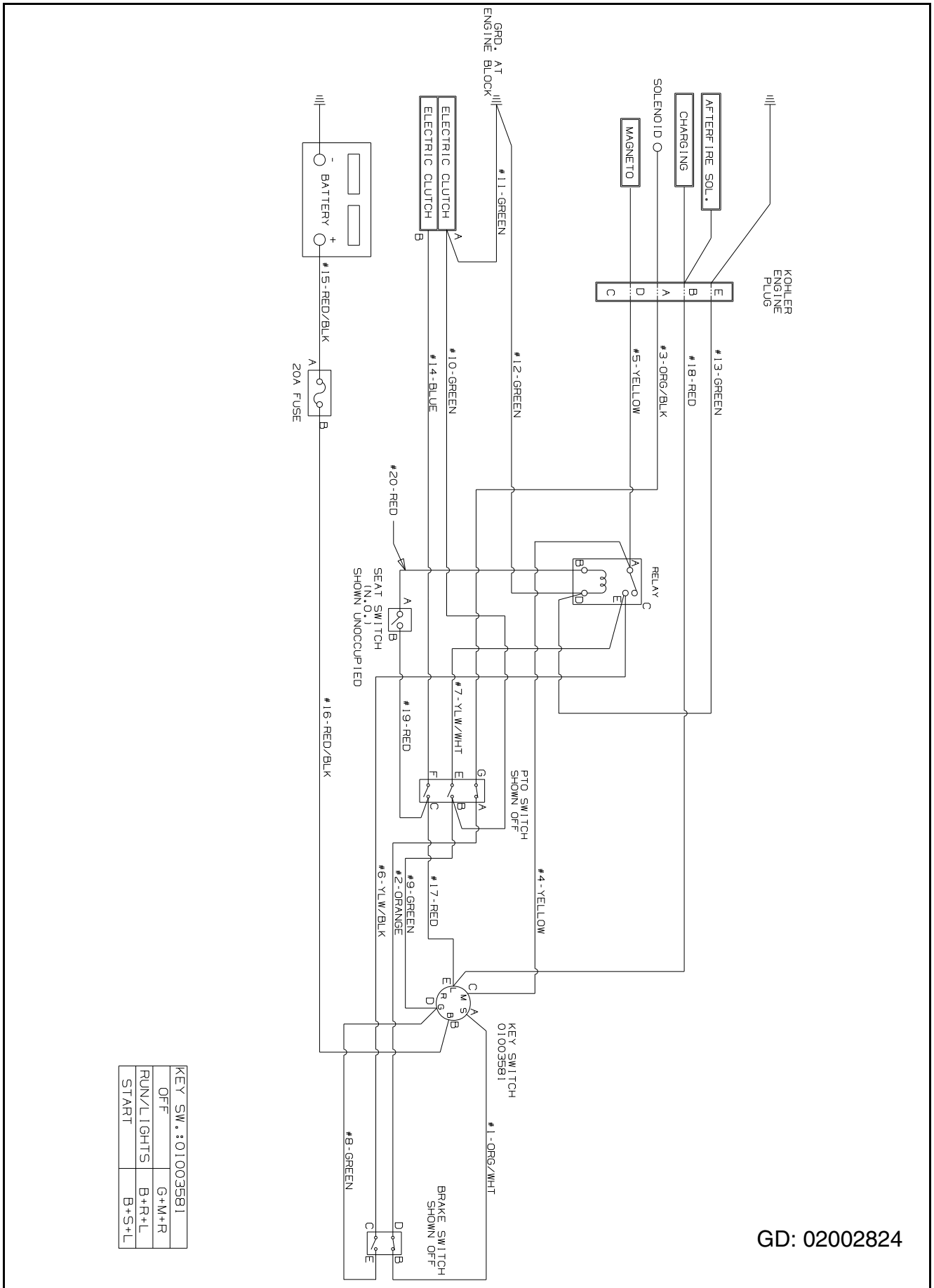

Reconfigurable Mower

	Front Skirt	Inner Baffle	Discharge Baffle	Cutting Blades	Gauge Wheels	Front Roller	Rear Rollers
Standard set-up	Low	installed	installed	Hi-lift	Low = 3" to 5"	Low = 3" to 5"	Low = 3" to 5"
Stems (Dandelion, Bahia, Buckhorn, etc.)	Med	removed	installed	Hi-lift	High = 1" to 2 1/2" Low = 3" to 5"	High = 1" to 2 1/2" Low = 3" to 5"	High = 1" to 2 1/2" Low = 3" to 5"
Very lush &/or tall grass	High	removed	installed	Hi-lift	High = 1" to 2 1/2" Low = 3" to 5"	High = 1" to 2 1/2" Low = 3" to 5"	High = 1" to 2 1/2" Low = 3" to 5"
Low cut height (1" to 2")	Med	installed	installed	Low-lift	High = 1" to 2 1/2"	High = 1" to 2 1/2"	High = 1" to 2 1/2"
Mulch	Low	installed	removed	Hi-lift/mulch	High = 1" to 2 1/2" Low = 3" to 5"	High = 1" to 2 1/2" Low = 3" to 5"	High = 1" to 2 1/2" Low = 3" to 5"
Material Collection	Low	installed	installed	Hi-lift	High = 1" to 2 1/2" Low = 3" to 5"	High = 1" to 2 1/2" Low = 3" to 5"	High = 1" to 2 1/2" Low = 3" to 5"
Abraisive (sandy), dry	Low	removed	installed	Low-lift	High = 1" to 2 1/2" Low = 3" to 5"	High = 1" to 2 1/2" Low = 3" to 5"	High = 1" to 2 1/2" Low = 3" to 5"
Wet	Low	installed	installed	Hi-lift	High = 1" to 2 1/2" Low = 3" to 5"	High = 1" to 2 1/2" Low = 3" to 5"	High = 1" to 2 1/2" Low = 3" to 5"

Notes:

This is a general outline of suggested settings, so keep in mind that your conditions may be different.

- **Adjustable Front Skirts - When "Low", increases lift for precision cutting. When "High", grass rebounds & can cut high volume grasses.**
- **Removable Inner Flow-Control Baffle - Regulates discharge (remove for high volume grasses, and install for precision cutting).**
- **Removable Discharge Baffle - Enhances the discharge spread pattern. Reduces clumping (it should be removed for mulching).**
- **Adjustable Gauge Wheels - Reduces scalping, helps provide precision cutting, and reduces turf defacement during turns.**
- **Adjustable Rear Rollers - Reduces scalping, and provides the striped appearance.**
- **Cutting Blades - Create lift (axial flow), cutting action, and discharge (centrifugal flow). Low to High lift depending on the sail shape.**
- **Discharge Chute - Controls the output (including thrown objects) and enhances the discharge pattern.**

To avoid damage to grasses, no more than 1/3 of the height should be removed at one cutting (if 6" tall, cut to 4").

USE THIS PAGE AS A GUIDE TO DETERMINE SLOPES WHERE YOU MAY NOT OPERATE SAFELY.

SLOPE GAUGE

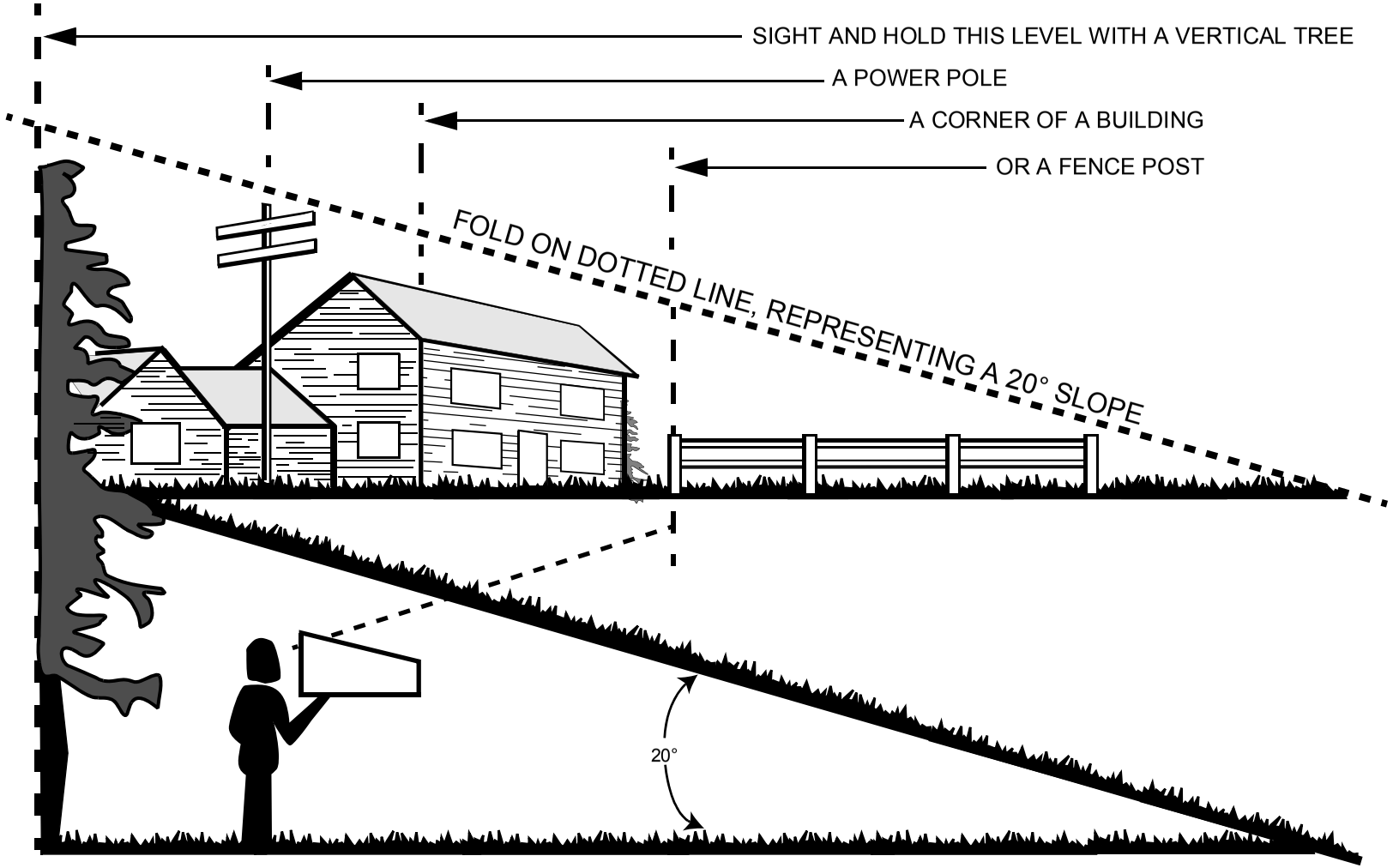

WARNING

Do not mow on inclines with a slope in excess of 20 degrees (a rise of approximately 3 feet every 10 feet). A riding mower could overturn and cause serious injury. If operating a walk-behind mower on such a slope, it is extremely difficult to maintain your footing and you could slip, resulting in serious injury.
Operate ZERO-TURN mowers across the face of slopes, never up and down slopes.
Operate WALK-BEHIND mowers across the face of slopes, never up and down slopes.

This page intentionally left blank.

This page intentionally left blank.

CALIFORNIA EMISSION CONTROL WARRANTY STATEMENT

YOUR WARRANTY RIGHTS AND OBLIGATIONS

The California Air Resources Board and MTD Consumer Group Inc are pleased to explain the evaporative emission control system warranty on your 2008 lawn mower. In California, new lawn mowers must be designed, built and equipped to meet the State's stringent anti-smog standards. MTD Consumer Group Inc must warrant the EECS on your lawn mower for the period of time listed below provided there has been no abuse, neglect or improper maintenance of your lawn mower.

Your EECS may include parts such as the carburetor, fuel-injection system, the ignition system, catalytic converter, fuel tanks, fuel lines, fuel caps, valves, canisters, filters, vapor hoses, clamps, connectors, and other associated emission-related components.

Where a warrantable condition exists, MTD Consumer Group Inc will repair your lawn mower at no cost to you including diagnosis, parts and labor.

MANUFACTURER'S WARRANTY COVERAGE:

This evaporative emission control system is warranted for two years. If any evaporative emission-related part on your equipment is defective, the part will be repaired or replaced by MTD Consumer Group Inc.

OWNER'S WARRANTY RESPONSIBILITIES:

As the lawn mower owner, you are responsible for performance of the required maintenance listed in your owner's manual. MTD Consumer Group Inc recommends that you retain all receipts covering maintenance on your lawn mower, but MTD Consumer Group Inc cannot deny warranty solely for the lack of receipts.

As the lawn mower owner, you should however be aware that MTD Consumer Group Inc may deny you warranty coverage if your lawn mower or a part has failed due to abuse, neglect, or improper maintenance or unapproved modifications.

You are responsible for presenting your lawn mower to MTD Consumer Group Inc's distribution center or service center as soon as the problem exists. The warranty repairs should be completed in a reasonable amount of time, not to exceed 30 days. If you have a question regarding your warranty coverage, you should contact the MTD Consumer Group Inc Service Department at 1-800-800-7310.

GENERAL EMISSIONS WARRANTY COVERAGE:

MTD Consumer Group Inc warrants to the ultimate purchaser and each subsequent purchaser that the lawn mower is: Designed, built and equipped so as to conform with all applicable regulations; and free from defects in materials and workmanship that cause the failure of a warranted part to be identical in all material respects to that part as described in MTD Consumer Group Inc's application for certification.

The warranty period begins on the date the lawn mower is delivered to an ultimate purchaser or first placed into service. The warranty period is two years.

Subject to certain conditions and exclusions as stated below, the warranty on emission-related parts is as follows:

1. Any warranted part that is not scheduled for replacement as required maintenance in the written instructions supplied, is warranted for the warranty period stated above. If the part fails during the period of warranty coverage, the part will be repaired or replaced by MTD Consumer Group Inc according to subsection (4) below. Any such part repaired or replaced under warranty will be warranted for the remainder of the period.
2. Any warranted part that is scheduled only for regular inspection in the written instructions supplied is warranted for the warranty period stated above. Any such part repaired or replaced under warranty will be warranted for the remaining warranty period.
3. Any warranted part that is scheduled for replacement as required maintenance in the written instructions supplied is warranted for the period of time before the first scheduled replacement date for that part. If the part fails before the first scheduled replacement, the part will be repaired or replaced by MTD Consumer Group Inc according to subsection (4) below. Any such part repaired or replaced under warranty will be warranted for the remainder of the period prior to the first scheduled replacement point for the part.
4. Repair or replacement of any warranted part under the warranty provisions herein must be performed at a warranty station at no charge to the owner.
5. Notwithstanding the provisions herein, warranty services or repairs will be provided at all of our distribution centers that are franchised to service the subject engines or equipment.
6. The lawn mower owner will not be charged for diagnostic labor that is directly associated with diagnosis of a defective, emission-related warranted part, provided that such diagnostic work is performed at a warranty station.
7. MTD Consumer Group Inc is liable for damages to other engine or equipment components proximately caused by a failure under warranty of any warranted part.
8. Throughout the lawn mower warranty period stated above, MTD Consumer Group Inc will maintain a supply of warranted parts sufficient to meet the expected demand for such parts.
9. Any replacement part may be used in the performance of any warranty maintenance or repairs and must be provided without charge to the owner. Such use will not reduce the warranty obligations of MTD Consumer Group Inc.
10. Add-on or modified parts that are not exempted by the Air Resources Board may not be used. The use of any non-exempted add-on or modified parts by the ultimate purchaser will be grounds for disallowing a warranty claims. MTD Consumer Group Inc will not be liable to warrant failures of warranted parts caused by the use of a non-exempted add-on or modified part.

WARRANTED PARTS:

The repair or replacement of any warranted part otherwise eligible for warranty coverage may be excluded from such warranty coverage if MTD Consumer Group Inc demonstrates that the lawn mower has been abused, neglected, or improperly maintained, and that such abuse, neglect, or improper maintenance was the direct cause of the need for repair or replacement of the part. That notwithstanding, any adjustment of a component that has a factory installed, and properly operating, adjustment limiting device is still eligible for warranty coverage. The following emission warranty parts are covered:

(1) Fuel Metering System

- Cold start enrichment system (soft choke)
- Carburetor and internal parts
- Fuel pump
- Fuel tank

(2) Air Induction System

- Air cleaner
- Intake manifold

(3) Ignition System

- Spark plug(s)
- Magneto ignition system

(4) Exhaust System

- Catalytic converter
- SAI (Reed valve)

(5) Miscellaneous Items Used in Above System

- Vacuum, temperature, position, time sensitive valves and switches
- Connectors and assemblies

(6) Evaporative Control

- Fuel hose certified for ARB evaporative emissions 2008
- Fuel hose clamps
- Tethered fuel cap
- Carbon canister
- Vapor lines

MANUFACTURER'S LIMITED WARRANTY FOR CUB CADET COMMERCIAL TANK ZERO-TURN COMMERCIAL RIDING MOWER

IMPORTANT: To obtain warranty coverage owner may be required present proof of purchase and applicable maintenance records to the servicing dealer. Please see the operator's manual for information on required maintenance and service intervals. In addition, Cub Cadet may deny warranty coverage if the hour meter, or any part thereof, is altered, modified, disconnected or otherwise tampered with.

The limited warranty set forth below is given by Cub Cadet LLC with respect to new merchandise used for commercial and related purposes purchased and used in the United States and/or its territories and possessions, and by MTD Products Limited with respect to new merchandise purchased and used in Canada and/or its territories and possessions (either entity respectively, "Cub Cadet").

Cub Cadet warrants this product (excluding its *No-Fault Components*, *Engines*, and *Batteries* as described below) against defects in material and workmanship for a period of three (3) years from the date of original retail purchase or lease and will, at its option, repair or replace, free of charge, any part found to be defective in materials or workmanship.

Engines are warranted to be free from defects in material and workmanship for a period of two (2) years from the date of original purchase or lease.

Batteries have a one-year prorated limited warranty against defects in material and workmanship, with 100% replacement during the first three months. After three months, the battery replacement credit is based on the months remaining in the twelve (12) month period dating back to the original date of original sale or lease. Any replacement battery will be warranted only for the remainder of the original warranty period.

No-Fault Components include only belts, tires, seats and grass bags which are warranted to be free from defects in material and workmanship for a period of thirty (30) days from the date of original purchase or lease or one hundred (100) hours of operation (whichever comes first).

HOW TO OBTAIN SERVICE: Warranty service is available, WITH PROOF OF PURCHASE AND APPLICABLE MAINTAINCE RECORDS, through your local authorized service dealer. To locate the dealer in your area;

In the U.S.A.:

Check your Yellow Pages, or contact Cub Cadet LLC at P.O. Box 361131, Cleveland, Ohio 44136-0019, or call 1-877-282- 8684, or log on to our Web site at www.cubcadetcommercial.com.

In Canada:

For all provinces excluding Quebec contact Modern Power Products d/o MTD Canada Ltd. At 60 Ottawa Street South, Kitchener, Ontario N2G 3S7 or call 1-800-567-6775 or log on to our website at www.cubcadet.ca.

In Quebec contact Les Distributions RVI Ltee. d/o MTD Canada Ltd. 2955 jean-Baptiste Deschamps, Ville Lachine, Quebec H8T 1C5 or call 1-800-361-5770 or log on to our website at www.cubcadet.info.

This limited warranty does not provide coverage in the following cases:

a. Routine maintenance items such as lubricants, filters, blade sharpening, tune-ups, brake adjustments, clutch adjustments, deck adjustments, control linkages, drive system, engines, and normal deterioration of the exterior finish due to use or exposure.
b. Service completed by someone other than an authorized service dealer.
c. For products sold or exported outside of the United States and/or Canada, and their respective possessions and territories, except those sold through Cub Cadet's authorized channels of export distribution.
d. Damage or failure resulting from the use of defective or improper peplacement parts and\or accessories other than genuine Cub Cadet parts.
e. Transportation charges and service calls.
f. Failure to operate and maintain the product in accordance with the Operator's Manual furnished with the product,
g. Damages and failures resulting from misuse, abuse, neglect, accident, improper maintenance, alteration, vandalism, theft, fire, water, or damage because of other peril or natural disaster.

There are no implied warranties, including without limitation any implied warranty of merchantability or fitness for a particular purpose. No warranties shall apply after the applicable period of express written warranty above. No other express warranties beyond those mentioned above, given by any person or entity, including a dealer or retailer, with respect to any product, shall bind Cub Cadet. The exclusive remedy is repair or replacement of the product as set forth above. The terms of this warranty provide the sole and exclusive remedy arising from the sale and/or lease of the products covered hereby. Cub Cadet shall not be liable for any incidental or consequential loss or damage including, without limitation, expenses incurred for substitute or replacement lawn care services or for rental expenses to temporarily replace a warranted product.

Some jurisdictions do not allow the exclusion or limitation of incidental or consequential damages, or limitations on how long an implied warranty lasts, so the above exclusions or limitations may not apply to you. This limited warranty gives you specific legal rights, and you may also have other rights that vary in different jurisdictions.

In no event shall recovery of any kind be greater than the amount of the purchase price of the product sold. **Alteration of safety features of the product shall void this warranty.** You assume the risk and liability for loss, damage, or injury to you and your property and/or to others and their property arising out of improper use, misuse or inability to use the product. This limited warranty shall not extend to anyone other than the original purchaser/Leasee or to the person for whom it was purchased or leased as a gift.