Cub Cadet COMMERCIAL

Hydrostatic Zero-Turn Commercial Riding Mower

Professional Turf Equipment

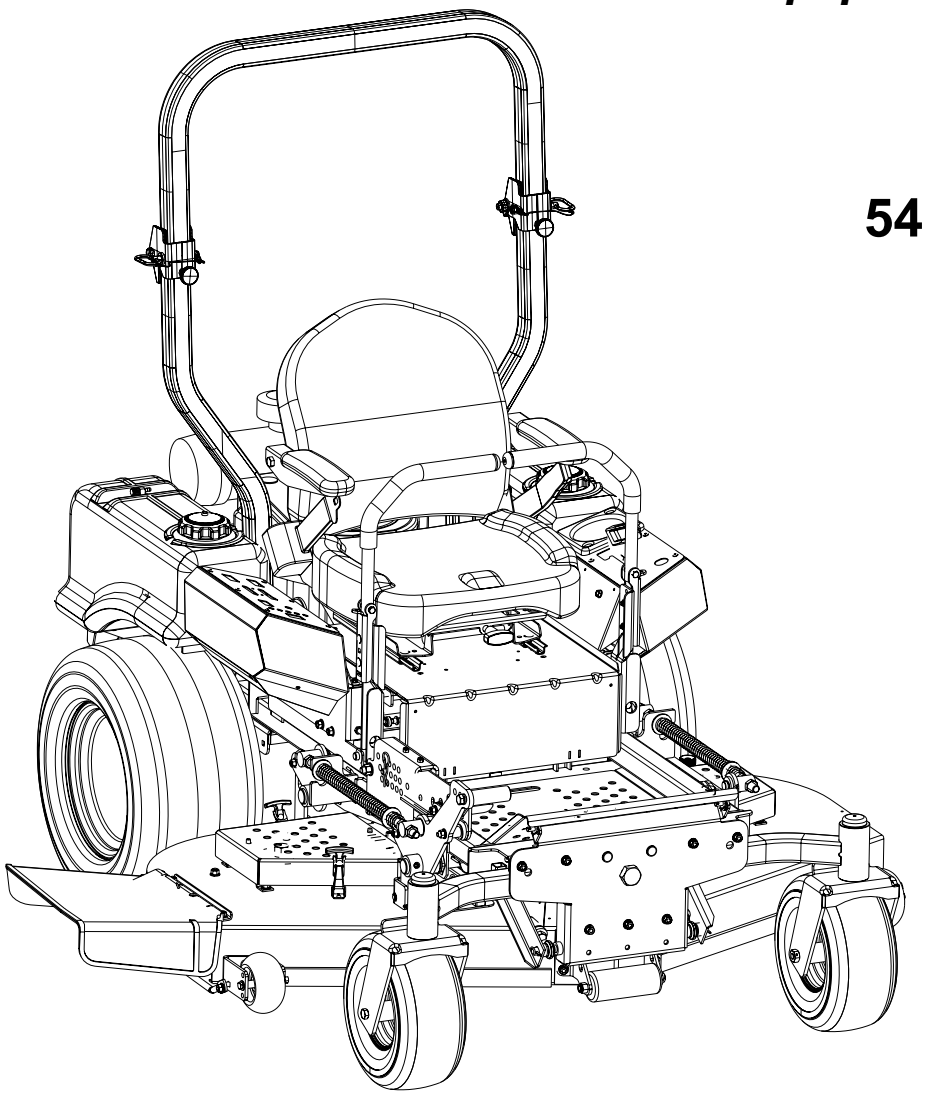

54" Fabricated Deck

ILLUSTRATED PARTS LIST

TABLE OF CONTENTS

Frame Assembly 3
54" Fabricated Cutter Deck. . . . . 4 and 5
54" Spindle Assembly. . . . . 6 and 7
Hydro Hose and Pump Assembly. . . . . .8 and 9
Brake Assembly . . . . . 10 and 11
Fuel Tank Assembly 12
Rear Bumper 13
Front Caster Assembly . . . . . 14 and 15
Control Assembly . . . . . 16 and 17
54" Wheel Assembly. 18
Seat/Floor Panel Assembly 19
23HP Kawasaki Engine Assembly . . . . . 20 and 21
Lift Assembly . . . . . 22 and 23
23HP Electrical Assembly Kawasaki 24

MODELS LISTED IN THIS MANUAL

23HP Tank,
53AI8CTW750

Frame Assembly- Figure 1 and Parts List

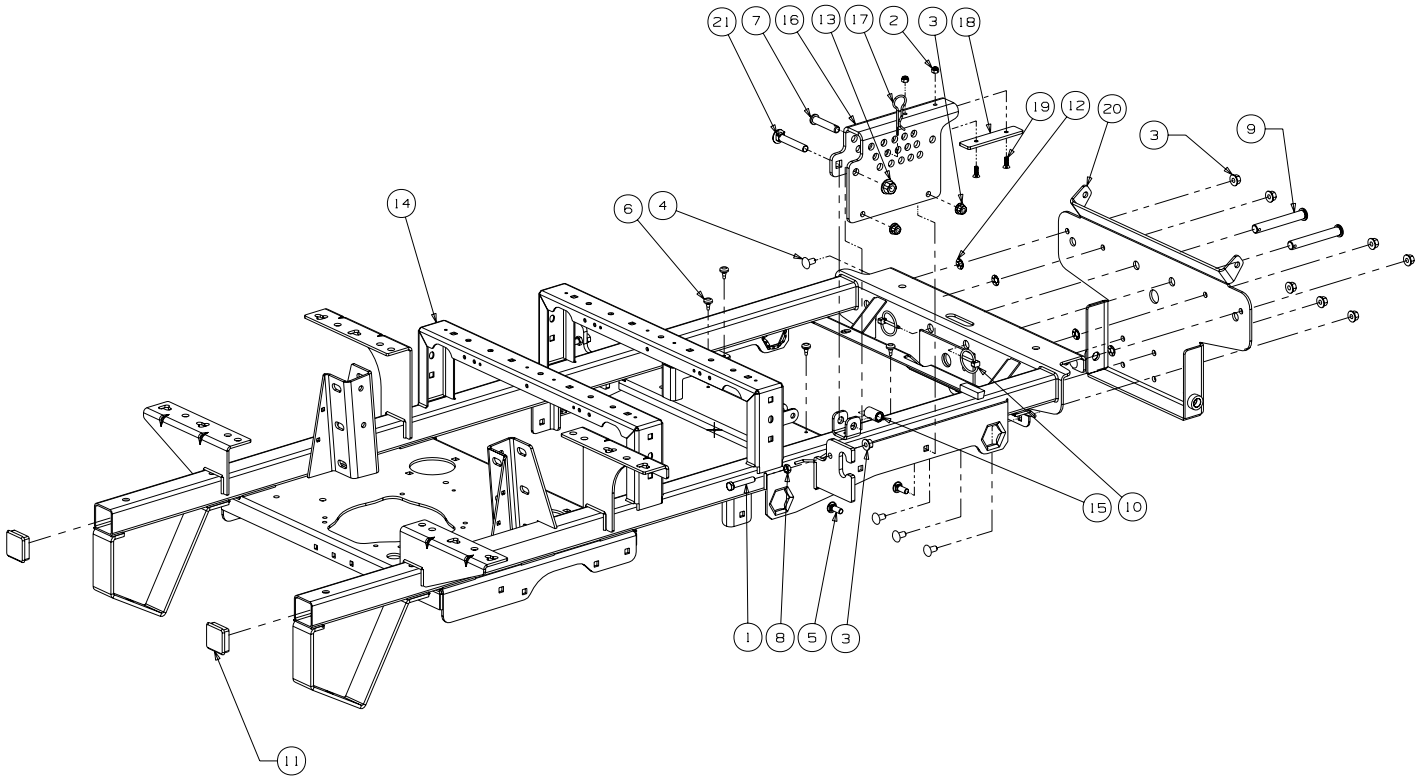

GD: 02002665-10/09/06

Ref. No.	Part No.	Description	Qty.
1	00002528	Hex Cap Screw 3/8-16 x 2.00	2
2	00012152	Lock Nut w/Nylon Insert	2
3	00022560	Hex Nut, 3/8-16 Flange Lock	11
4	01000372	Carriage Bolt, 3/8-16 x .75 Long	7
5	01000643	Carriage Bolt, 3/8-16 x 1	2
6	01001170	Rubber Bumper, .62 OD x .22 Thick	4
7	01001776	Clevis Pin, .500 Dia. x 2.50 Lg.	1
8	01002511	Nut, 3/8-16, Jam	2
9	01003282	Clevis Pin, .625 Dia x 4.375 Long	2
10	01003993	Linch Pin, 3/16 Dia.	2
11	01005160	Plug, Square Tube	2
12	01008225	Push Retainer, 3/8	4
13	01010119	Nut, 1/2-13, Flangelock	1
14	02002599	Frame Assembly	1
15	02002655	Spacer, .51 ID x .75 OD x 1.40	1
16	02003055	Lift Index Bracket	1
17	02003074	HitchPin, .120 Dia. x 3.0	1
18	02003501	Wear Plate, 1.25 x 5.00	1
19	02003505	Flat Head Cap Screw, 1/4-20 x .75	2
20	02003524	Bracket Assembly, Frame, Front	1
21	02003563	Carriage Bolt, 1/2-13 x 3.00	1

54" Fabricated Deck Assembly - Figure 2

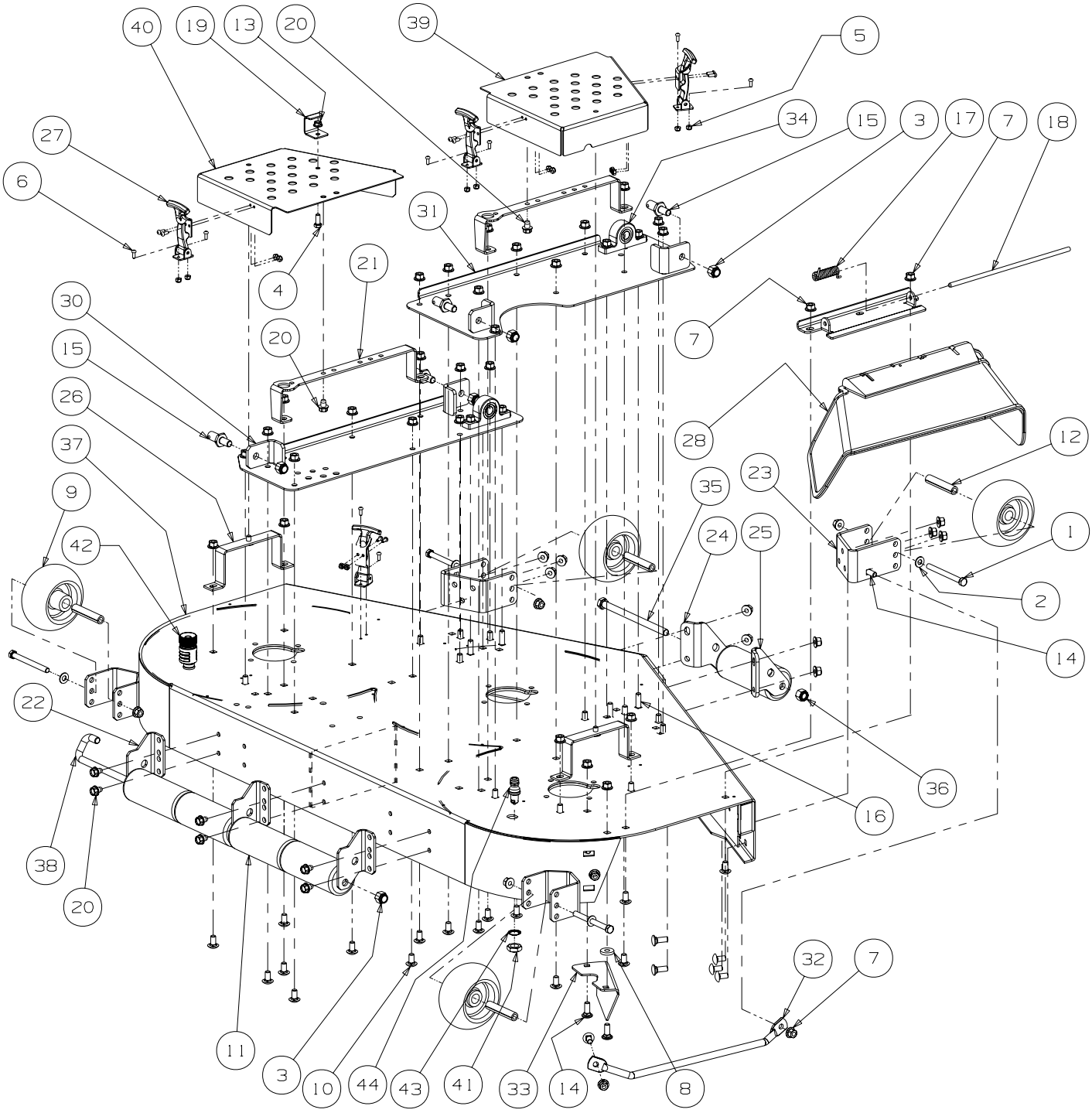

GD: 02002927-01/24/07

54" Fabricated Deck Assembly - Parts List for Figure 2

Ref. No.	Part No.	Description	Qty.
1	00011925	Hex Cap Screw, 3/8-16, 3.75	4
2	00012158	Flat Washer, 3/8	4
3	00012428	Lock Nut, Nylon Insert, 1/2-13	5
4	00013406	Hex Cap Screw, 5/16-18 x 3/4	1
5	00014608	Lock Nut, Nylon Insert, 10-32	16
6	00017778	Phillips Head Screw, 10-32	16
7	00022560	Hex Nut, 3/8-16 Flange Lock	50
8	00083192	Idler Washer	1
9	01000343	Complete Wheel, 5.00 Dia.	4
10	01000372	Carriage Bolt, 3/8-16 x .75 Lg.	37
11	01000385	Front Roller	5
12	01000398	Wheel Spacer	4
13	01000635	Hexflange Lock Nut, 5/16-18	1
14	01000643	Carriage Bolt, 3/8-16 x 1	7
15	01001745	Pin, 5/8 Dia. x 1.2 Lg.	4
16	01002010	Carriage Screw, 3/8-16 x 1.25	4
17	01003253	Spring Torsion, 0.4 ID x 2.16 LG	1
18	01003254	Defllector Chute Rod	1
19	01004109	Tension Rod Stop Bracket	1
20	01004304	Hex Index Washer Screw, 3/8-16, .5	8
21	01004685	Cover Support	2
22	01005364	Roller Mount Bracket	3
23	01005260	Anti-Scalp Wheel, Front Mount Bracket	2
24	01005256	Left Hand Front Roller Mount Bracket	1
25	01005258	Right Hand Front Roller Mount Bracket	1
26	01005437	Outer Belt Cover Support Assembly	2
27	01005869	T-Handle Draw Latch	4
28	01006693	Deflector Chute	1
29	01008226	Deflector Chute Bracket	1
30	01008633	Left Hand Mount, Deck Bracket Assembly	1
31	01008635	Deck Bracket Assembly	1
32	01008644	Finger Guard	1
33	01009300	Chute Bracket	1
34	02000109	Pillow Block	2
35	02002154	Hex Cap Screw, 1/2-20 x 7.25	1
36	02002299	Lock Nut, Nylon Insert, 1/2-20	1
37	02002528	54 Deck Assembly	1
38	02002799	J-Hook w/ Threaded Roller	1
39	02002836	Right Hand Belt Deck Cover	1
40	02002837	Left Hand Belt Deck Cover	1
41	712-0641	Hex Nut, M16-1.5	2
42	721-04041	Water Nozzle Adaptor	1
43	736-0760	Lock Washer, 17 x 23.8 x 1.95	2
44	737-04003B	Deck Water Nozzle	2

54" Fabricated Deck Spindle Assembly - Figure 3

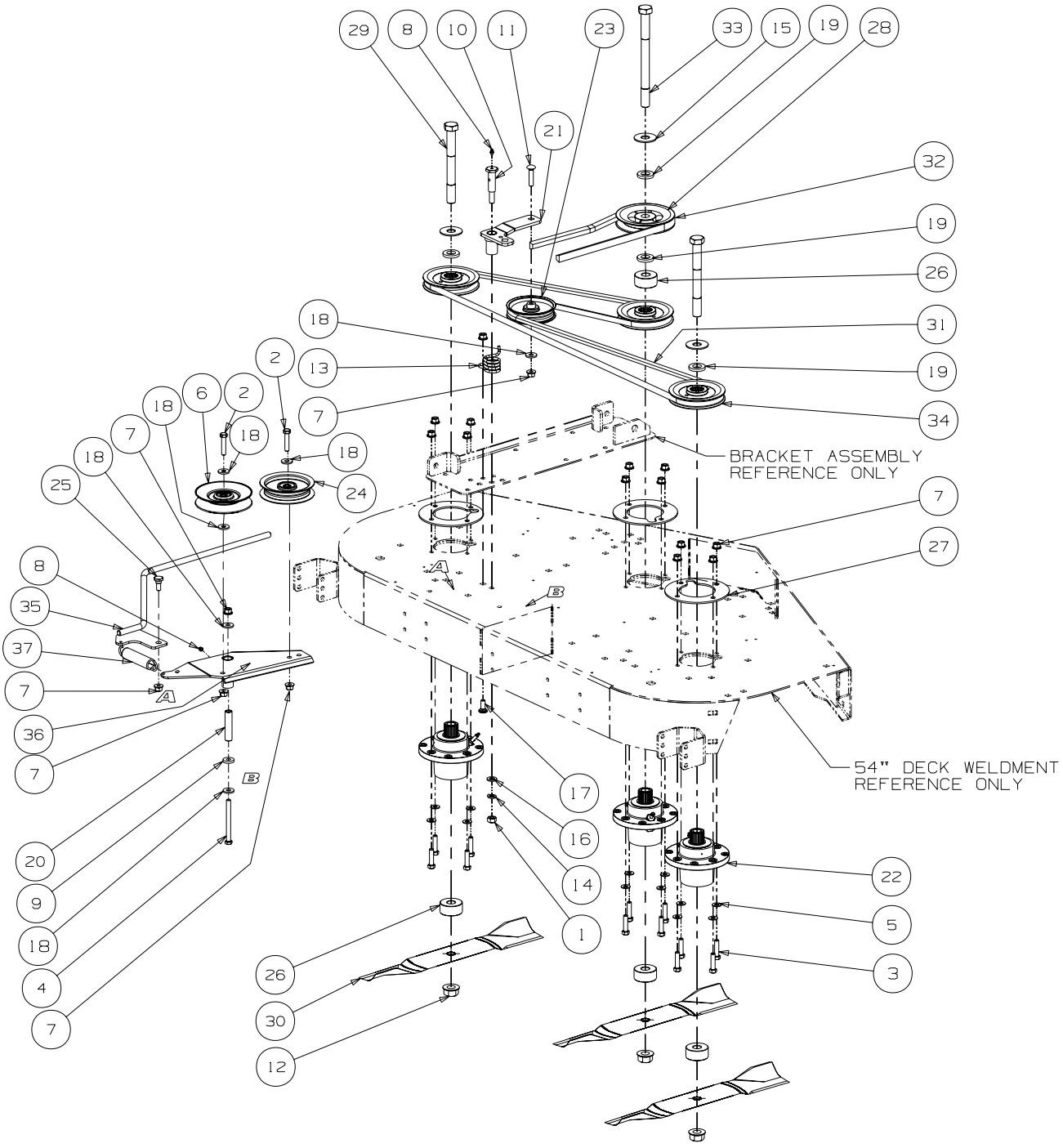

GD: 02003630-11/01/06

54" Fabricated Deck Spindle Assembly - Parts List for Figure 3

Ref. No.	Part No.	Description	Qty.
1	00005763	Hex Nut, 7/16-14	1
2	00008495	Hex Cap Screw, 3/8-16 x 1-1/4	2
3	00011438	Hex Cap Screw, 3/8-16 x 1-1/2	12
4	00011925	Hex Cap Screw, 3/8-16, 4.00	1
5	00012158	Flat Washer, 3/8	12
6	756-3045	Idler Pulley, 5.06 Dia.	1
7	00022560	Hex Nut, Flange Lock, 3/8-16	18
8	00060078	Grease Fitting, 1/4-28 x 3/16	2
9	00083192	Idler Washer	1
10	01000302	Shoulder Screw, 7/16-14	1
11	01000364	Hex Carriage Screw, 3/8-16, 1.75	1
12	01000380	Flange Hex Nut, 3/4-16	3
13	01000387	Torsion Spring Idler	1
14	01000389	Lock Washer, 7/16	1
15	01000392	Flat Washer, .781 ID, 2.00 OD, .105	3
16	01000393	Flat Washer, .469 ID, .875 OD, .105	1
17	01000643	Carriage Bolt, 3/8-16 x 1	1
18	01000723	Flat Washer, .406 ID, 1.0 OD, .105	6
19	01003123	Spacer, .812 ID x .218 LG	4
20	01003245	Spacer, .39 ID x .625 OD x 2.75	1
21	01005737	Idler Arm Assembly, Deck Spindle includes:	1
	01000308	Bearing	2
22	01003532	Spindle Assembly, Aluminum Fab Deck	3
23	01004081	Flat Pulley	1
24	01004101	Idler Pulley, 4.06 OD w/Deep Plan Flanges	1
25	01004118	Shoulder Screw, .50 x .27 LG, 3/8-16	1
26	01004415	Spacer, .760 ID x 2.000 OD x 1.1	4
27	01005434	Plate Support, Cast Aluminum Spindle	3
28	01005201	V Pulley, 5.25 OD	1
29	01005213	Hex Cap Screw, 3/4-16, 7.00	2
30	01005337	Hi-Lift Blade, 19.0, 0.756	3
31	01005375	V Belt, A Section x 114.3	1
32	01005378	V Belt, B Section x 87.3	1
33	01005388	Hex Cap Screw, 3/4-16, 9.00	1
34	01005616	V Pulley, 5.00 OD	3
35	01005690	Rod Fab Deck Spring Tension	1
36	02003489	Idler Arm Assembly includes:	1
	01000308	Bearing	2
37	02003712	Spring Extension, .94 OD x 7.57	1

Hydro Hose and Pump Assembly - Figure 4

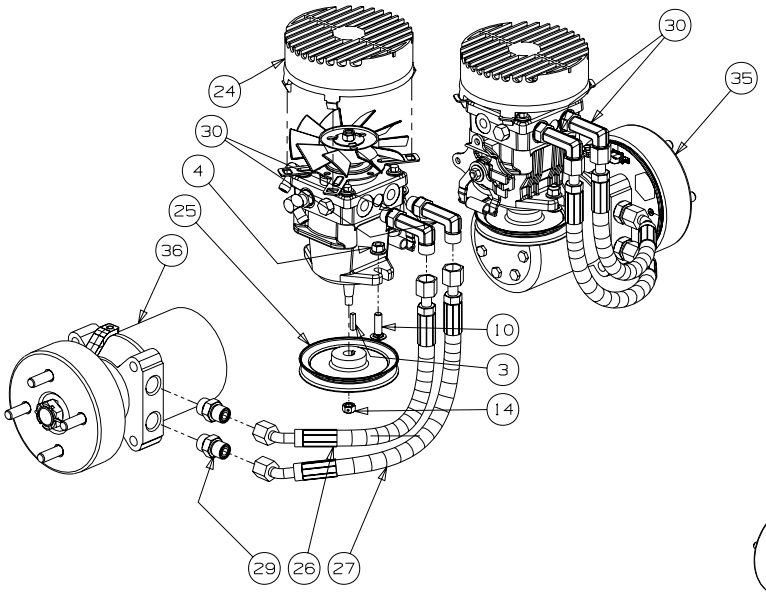

Pump & Motor Systems

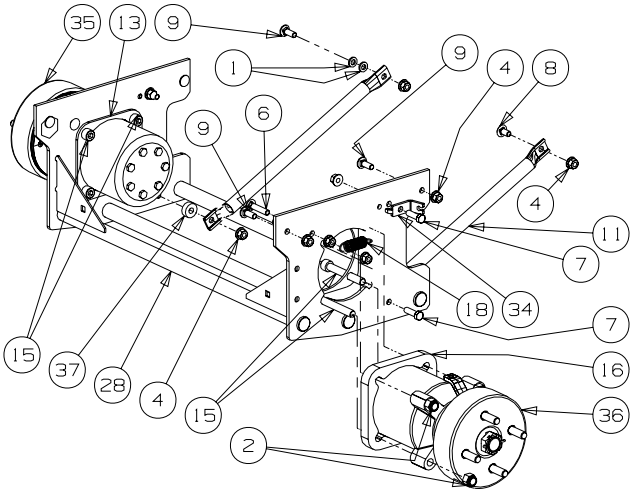

Motor Mount Systems

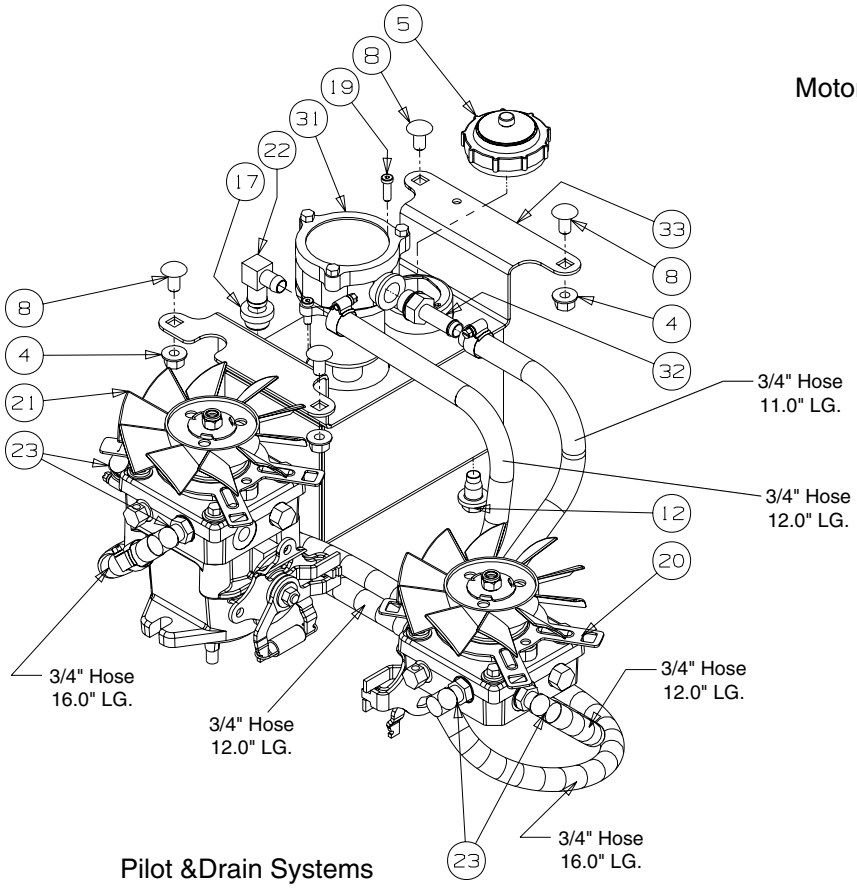

Pilot &Drain Systems

GD: 02002828-12/04/06

Hydro Hose and Pump Assembly- Parts List for Figure 4

Ref. No.	Part No.	Description	Qty.
1	00012157	Washer lock 3/8 zinc	2
2	00012428	Washer lock 3/8 zinc	8
3	00020628	Key, 3/16" x 7/8"	2
4	00022560	Flange Lock Hex Nut, 3/8-16	22
5	00030261	Cap, Hydro Oil Tank	1
6	01000364	Hex Carriage Screw, 3/8-16, 1.75	2
7	01000369	Hex Cap Screw, 3/8 -16 x 1.25	4
8	01000372	Carriage Bolt, 3/8-16 x .75 LG.	5
9	01000643	Carriage Bolt, 3/8-16 x 1	5
10	01002010	Carriage Screw, 3/8-16 x 1.25	4
11	01001618	Strut Frame	2
12	01004192	Oil Pan Drain Plug w/ Seal	1
13	01006948	Hydro Wheel Motor Backup Plate	2
14	01007309	Hex Nut, 3/8-24	2
15	01007791	Socket Head Capscrew, 1/2-13; 3-1/2	8
16	01009775	Hydro Motor Spacer	2
17	02000296	Grommet Fitting, .54 ID x .78 OD	1
18	02000401	Spring Extension, .740 OD x 2.656	2
19	02000841	Socket Low Head Cap Screw, 1/4-20 x 0.75	2
20	02000905	Hydro Pump, BDP-12, RH	1
	01009631	Kit, Fan	1
21	02000906	Hydro Pump, BDP-12, LH	1
	01009631	Kit, Fan	1
22	02001151	Fitting Elbow Spur, 5/8 x 1/2	1
23	02001160	Fitting Elbow, 9/16 x 1/2	4
24	02001169	Fan Pump Shroud	2
25	02001172	Hydro Pump Pulley	2
26	02001176	Short Pressure Hose Assembly	2
27	02001177	Long Pressure Hose Assembly	2
28	02001489	Hydro Motor Frame Assembly	1
29	02001715	Adaptor Fitting, 8 x 10	4
30	02002003	Adaptor, 8 x 8	4
31	02002257	Hydraulic In-Tank Filter includes:	1
	02002258	Replacement Filter	1
32	02002557	Fitting, 3/4 ORB x 1/2 Tube	1
33	02002703	Hydraulic Tank Assembly	1
34	02003826	Rear Cable Mounting Bracket	2
35	02002967	Hydro Motor, Left Hand Assembly w/ Brake & Drum	1
36	02002968	Hydro Motor, Right Hand Assembly w/ Brake & Drum	1
37	750-3119	Spacer .406 ID x 1.0 OD	2
38	--	Fuel Hose, .50 ID x .75 OD (in inches)	79
39	02001175	Tee Fitting, 1/2	2
40	02002392	Hose Clamp, 1/2	12

NOTE: Lubricant, 02002058 Quarts, 2.00

Brake Assembly - Figure 5

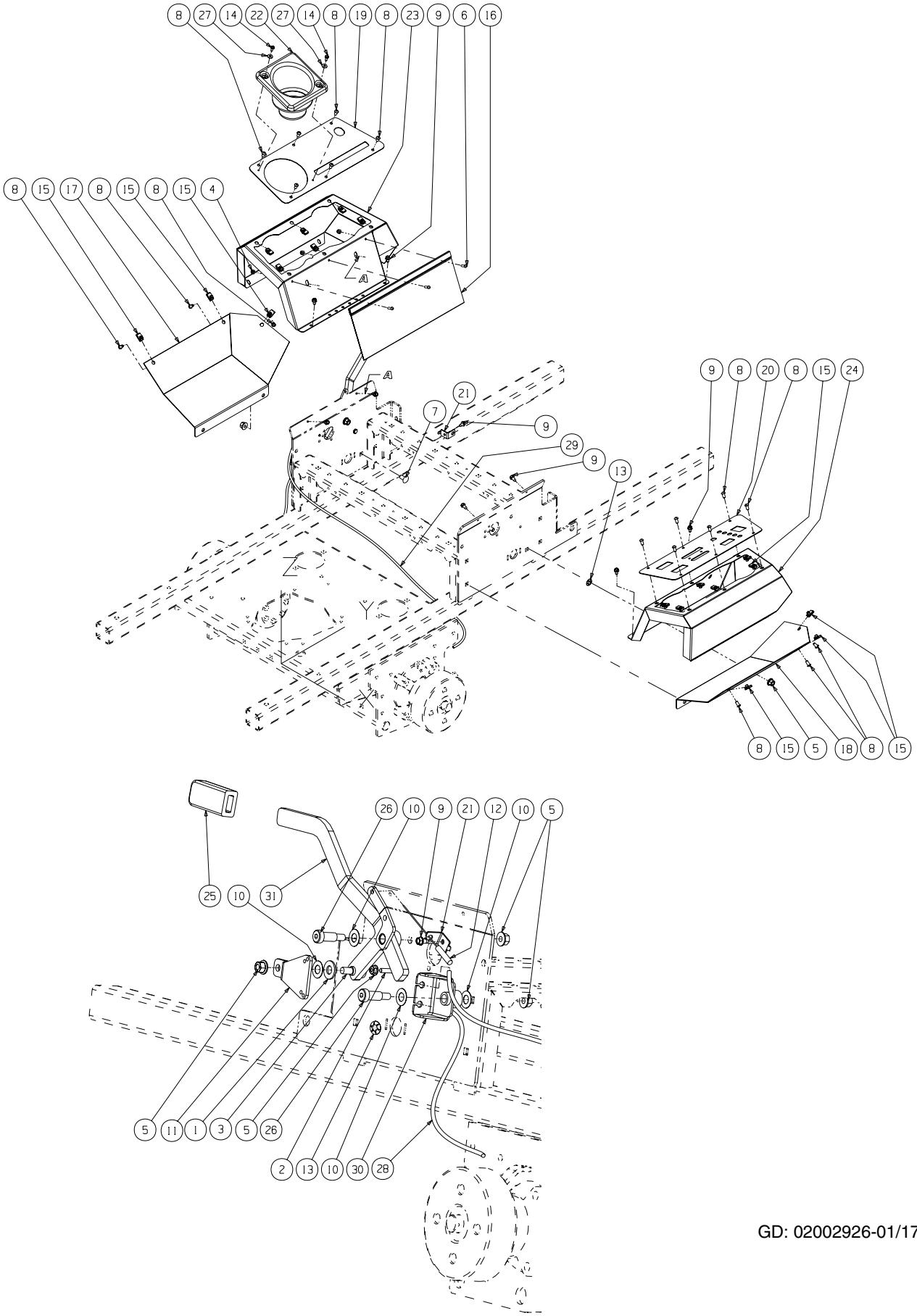

GD: 02002926-01/17/07

Brake Assembly - Parts List for Figure 5

Ref. No.	Part No.	Description	Qty.
1	00012577	Washer, 1/2 Zinc	1
2	01000643	Carriage Bolt, 3/8-16, 1.00	1
3	00011450	Shoulder Bolt, 1/2 x 1/2	1
4	00014608	Lock Nut, Nylon Insert, 10-32	3
5	00022560	Flange Lock Hex Nut, 3/8-16	6
6	00030906	Phillips Head Machine Screw, 10-32 x 5/8	3
7	01000372	Carriage Bolt, 3/8-16 x .75	2
8	01000443	Screw Button Head, 1/4-20 x .5	18
9	01000628	Screw, TT, 1/4-20, 0.5, Hex Index Washer	10
10	01000930	Washer, .508 ID x 1.0 OD x .020	4
11	02003841	Centering Bracket	1
12	01008198	Left Hand Brake Cable	1
13	01008225	Push Retainer, 3/8	2
14	01008531	Screw, #10-32 x 0.500	2
15	01008539	U-Nut, 1/4-20	18
16	02000362	Bag, Debris Storage	1
17	02002797	Lower Panel, LH	1
18	02002796	Lower Panel, RH	1
19	02002823	Control Panel Cover, LH	1
20	02002889	Control Panel Cover, RH	1
21	02002864	Brake Cable Mounting Bracket	2
22	02002874	Cup Holder	1
23	02002971	Control Panel, LH	1
24	02002972	Control Panel, RH	1
25	02003010	Parking Brake Grip	1
26	02003603	Shoulder Bolt, 1/2 x 1.00, 3/8-16	2
27	02003725	Washer, 3/16	2
28	02003770	Brake Cable, LH	1
29	02003774	Brake Cable, RH	1
30	02003776	Brake Cable Bracket	1
31	02003782	Brake Lever	1

Fuel Tank Assembly - Figure 6 and Parts List

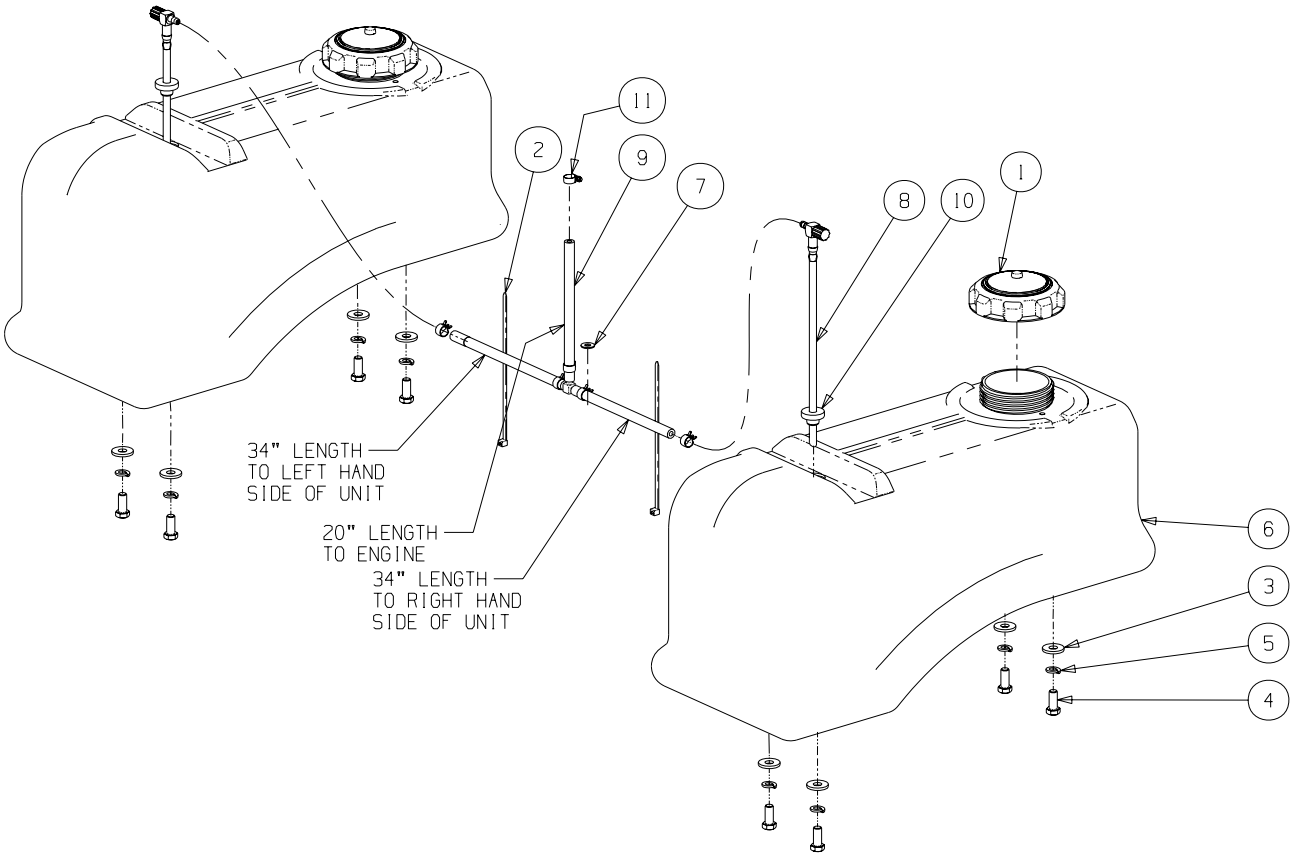

GD: 02001910-01/11/07

Ref. No.	Part No.	Description	Qty.
1	02003809	Fuel Cap, 3.5, Tethered	2
2	00012470	Cable Tie	2
3	01000723	Flat Washer, .406 ID, 1.0 OD, .105	8
4	01000368	Hex, Cap Screw, 3/8-16, .88	8
5	00012157	Lock Washer, 3/8	8
6	02003842	Fuel Tank	2
7	01000600	Flat Washer, 1.4 x .630 x .0515	1
8	01007425	Fuel Fitting	2
9	02001908	Fuel Hose Assembly includes:	1
	--	Hose, 1/4" Fuel Line (in inches)	88
	00012235	Clamp, Union	5
	01003473	Tee Fitting, Fuel	1
10	02002253	Grommet, Fuel Tank	2
11	01000215	Hose Clamp, SAE #4: 1/4-5/8, SS	1

Rear Bumper - Figure 7 and Parts List

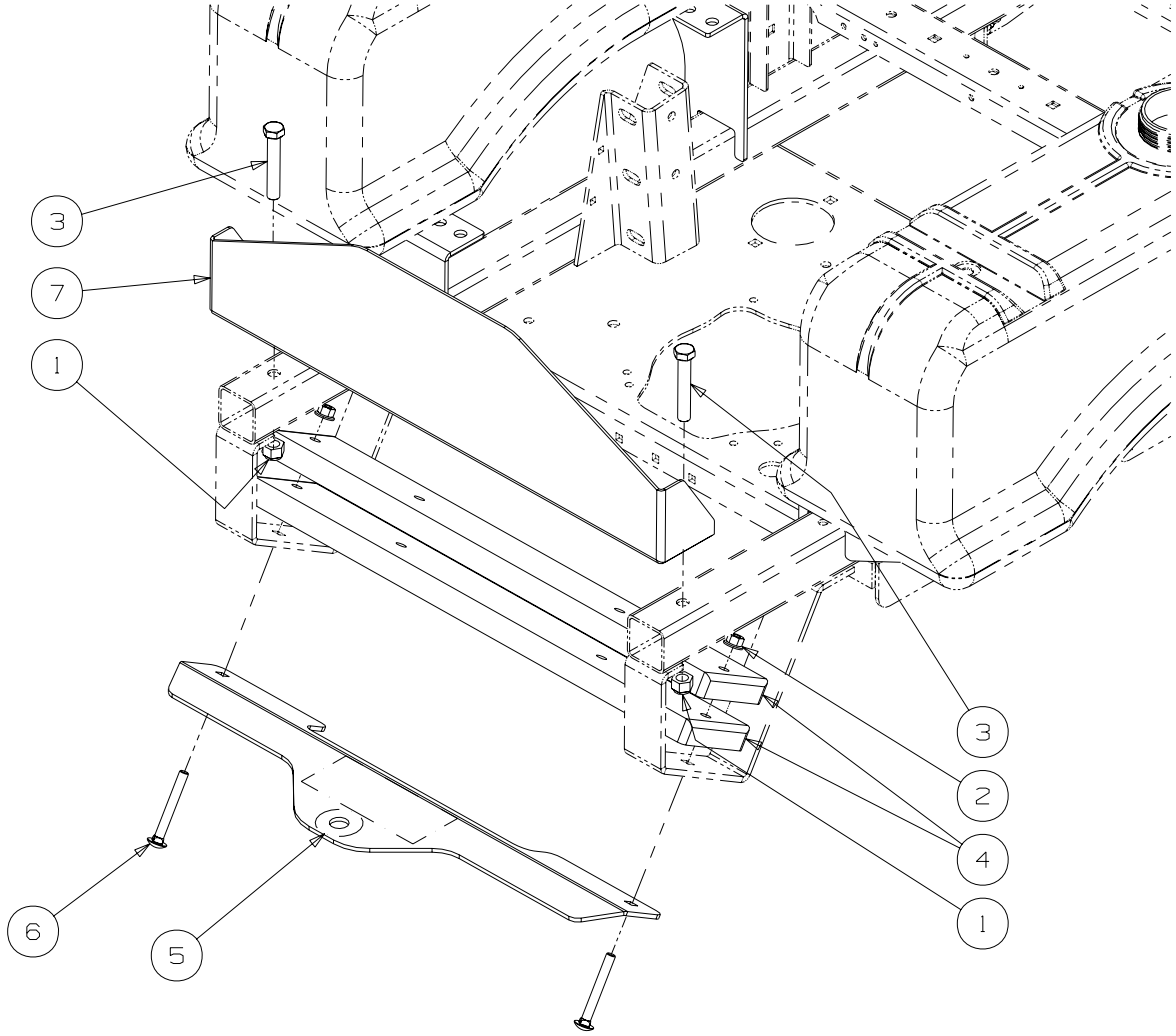

GD: 02003564-10/25/06

Ref. No.	Part No.	Description	Qty.
1	00012428	Hex Nut, 1/2-13, Insert Lock	2
2	00022560	Nut, Hex 3/8-16 Flange Lock	2
3	00030046	HHCS, 1/2-13, 3.00	2
4	01009992	Bar, Weight	2
5	02002536	Hitch Bracket	1
6	02003570	Carriage Bolt, 3/8-16 x 3.00	2
7	02003634	Rear Bumper	1

Front Caster Assembly - Figure 8

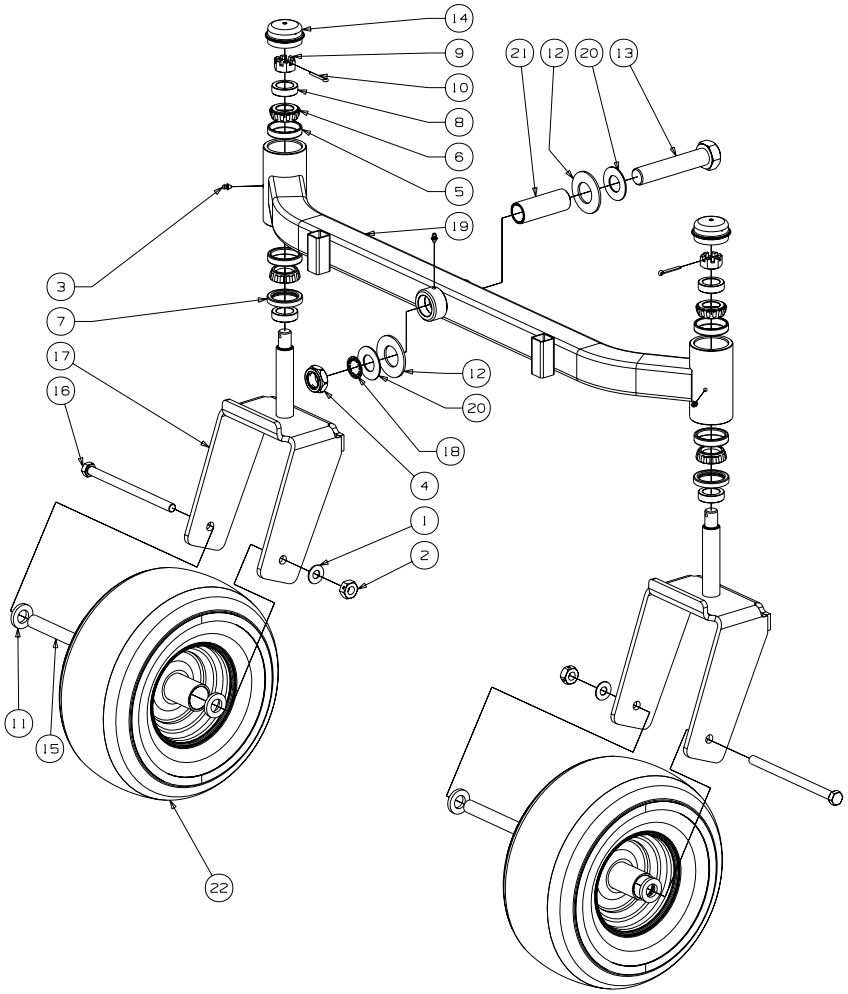

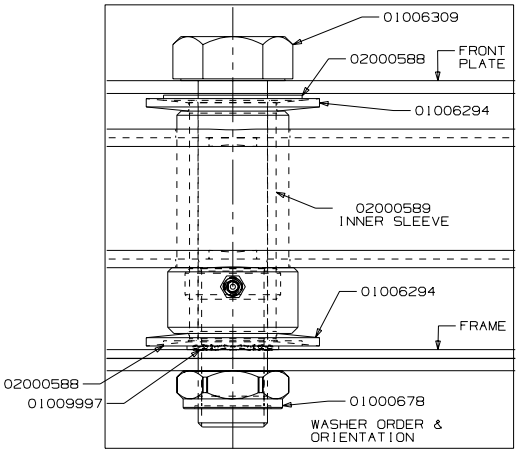

GD: 02002820-10/04/06

Front Caster Assembly - Parts List for Figure 8

Ref. No.	Part No.	Description	Qty.
1	00012577	Washer, 1/2 x 1 Shim	2
2	00023287	Nut, 1/2-20, Center Lock	2
3	00060078	Grease Fitting, 1/4-28 x 3/16	3
4	01000678	Nut, Jam, 1.0-14, Insert Lock	1
5	01002620	Cup Bearing	4
6	01002621	Bearing Cone	4
7	01002622	Seal	2
8	01002624	Ring Seal	4
9	01002626	Slotted Nut, 3/4-16	2
10	01002627	Cotter Pin, 5/32, 1.25	2
11	01003123	Spacer, .812 ID x .218LG	4
12	01006294	Bell Washer, 1.25 ID x 2.5 x .157	2
13	01006309	Hex Cap Screw, 1-14 x 5.0	1
14	01006347	Grease Cap, 1.986 OD	2
15	01006912	Wheel Spacer	2
16	01006961	HHCS, 1/2-20, 7.50	2
17	01007407	Yoke, Caster Wheel	2
18	01009997	Retainer Extension, Self Locking	1
19	02000439	Front Axle Assembly	1
20	02000588	Flat Washer, 1.00 ID	2
21	02000589	Spacer, 1.005 ID x 1.25 OD x 3.6	1
22	02002821	Wheel, 13 x 6.50 x 6.0, Beige, includes	2
	02002108	Tire	1
	02002106	Roller Bearings	2
	02002107	Retainer Bushings	2

Control Assembly- Figure 9

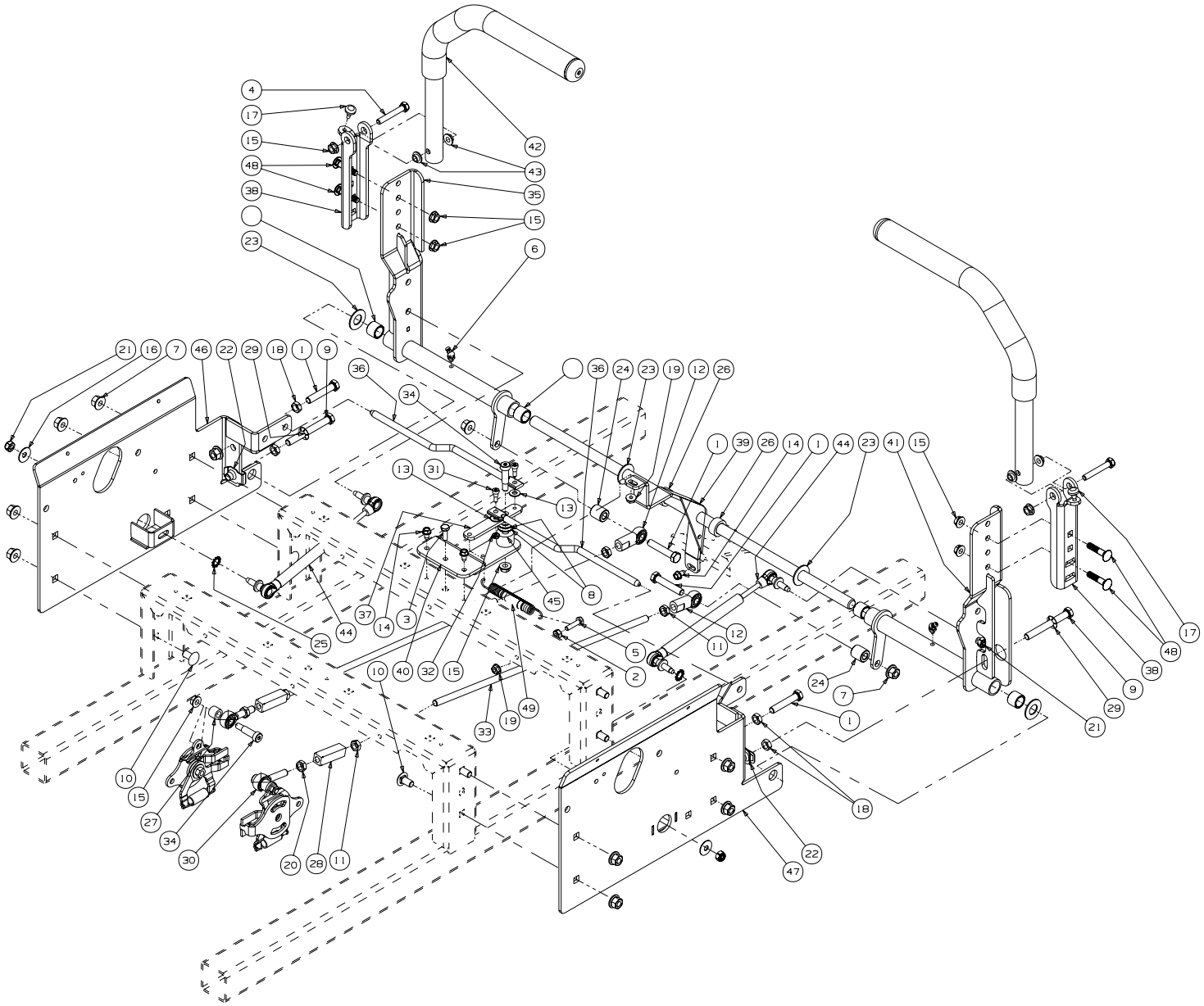

GD: 02002550-01/03/07

Control Assembly - Parts List for Figure 9

Ref. No.	Part No.	Description	Qty.	Ref. No.	Part No.	Description	Qty.
1	00002528	Hex Cap Screw, 3/8-16 x 2.00	4	28	01007734	Turnbuckle	2
2	00012186	Hex Nut, 1/4-20	1	29	01008225	Push Retainer	2
3	00013131	Hex Cap Screw, 1/4-20, .75	1	30	01008367	B/Joint, 3/8-24, Left Hand Female	2
4	00013198	Hex Cap Screw, 5/16-18 x 2.00	2	31	01009322	Shoulder Bolt, 1/4 x 1/4	2
5	00013416	HHCS, 1/4-20 x 1.00	1	32	01009377	Nut w/ Star Washer, 10-24	2
6	00021958	Grease Fitting, 1/4-28, 45 degree	2	33	01009560	Control Rod, 3/8 x 17.312	2
7	00022560	Hex Nut, 3/8-16, Lock Flange	12	34	02000069	Screw, Shoulder Control Rod	3
8	00061053	Washer, 3/8, SS	2	35	02002931	Lapbar Control Assembly, LH	1
9	01000371	Hex Cap Screw, 3/8-16 x 3.25	2		01004265	Bearing	2
10	01000372	Carriage Bolt, 3/8-16 x .75	8	36	02002542	Brake/Control Rod	2
11	01000450	Hex Jam Nut, 3/8-24	4	37	02002543	Lapbar Control Arm	1
12	01000451	B/Joint, 3/8-24, Right Hand Female	2	38	02002545	Lapbar Pivot Bracket	2
13	01000600	Flat Washer, 1.4 x .630 x .0515	2	39	02002555	Lapbar Control Shaft Assembly	1
14	01000628	Screw, TT, 1/4-20, 0.5, Hex Index Washer	3	40	02002657	Lapbar/Brake Control Mounting Bracket	1
15	01000635	Nut, Lock, HexFlange, 5/16-18	9	41	02002932	Lapbar Control Assembly, RH	1
16	01000960	Belle Washer, .325 x .930 x .045	2		01004265	Bearing	2
17	01001170	Rubber Bumper, .62 OD x .22 Thick	2	42	02003024	Lapbar Assembly includes:	2
18	01002511	Nut, 3/8-16, Jam	4		02002549	Control Handle Pivot Tube	2
19	01002766	Hex Flange Lock Nut, 1/4-20	2		02002662	Grip, 1.0	2
20	01002986	Nut, 3/8-24, Jam, LH Third	2	43	02003419	Bushing, .310 x .172 x .688 x .06	4
21	01003561	Nut, Hex, Center Lock, M8	4	44	02003653	Cylinder Return to Neutral	2
22	01003947	U-Nut, 3/8-16, .75	2	45	02003664	Spacer, .405 ID x 1.0 OD x .72	1
23	01004003	Flat Washer, 5/8 Nylon	4	46	02003885	Side Panel, Control, Left	1
24	01004129	Spacer, .385 ID x .75 OD x .875	2	47	02003880	Side Panel, Control, Right	1
25	01005851	External Washer, 3/8	2	48	710-0262	Carriage Bolt, 5/16-18 x 1.50	4
26	01006350	Shaft Collar	2	49	732-0470A	Extension Spring, .53 OD x 4.75	1
27	01007312	Spacer, .625 OD x .385 ID x 1/2	2				

54" Wheel Assembly - Figure 10 and Parts List

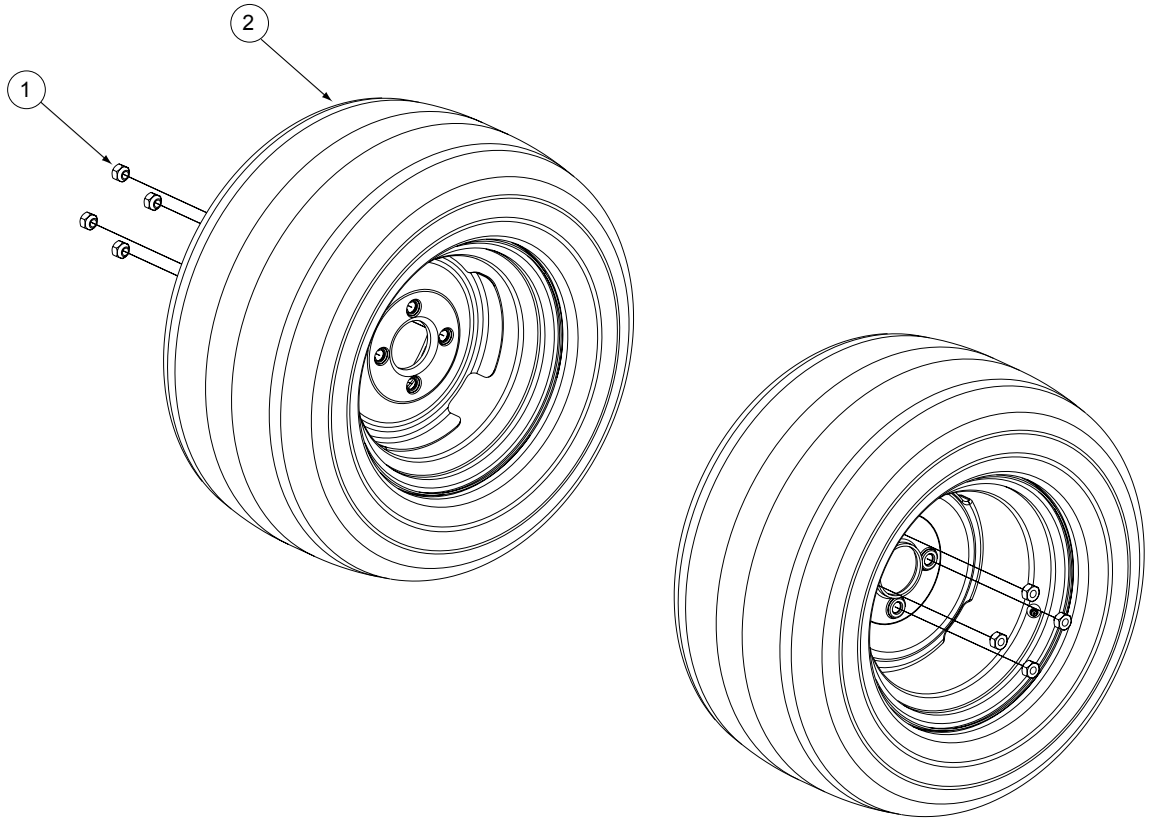

GD: 02002669-10/04/06

Ref. No.	Part No.	Description	Qty.
1	00012187	Lug Nut, 1/2-20	8
2	02002668	Wheel Assembly, 24 x 12.00-12, Beige	2
		Includes:	
	00073975	Tire, 24 x 12.00-12	
		Rim, 12 Dia x 8.50 width	
OPTIONAL TIRES			
	01002182	Wheel Assembly, 24 x 12.00-12, Turf Saver	
	01004473	Tire, 24 x 12.00-12, Turf Saver	

Seat/Floor Panel Assembly- Figure 11 and Parts List

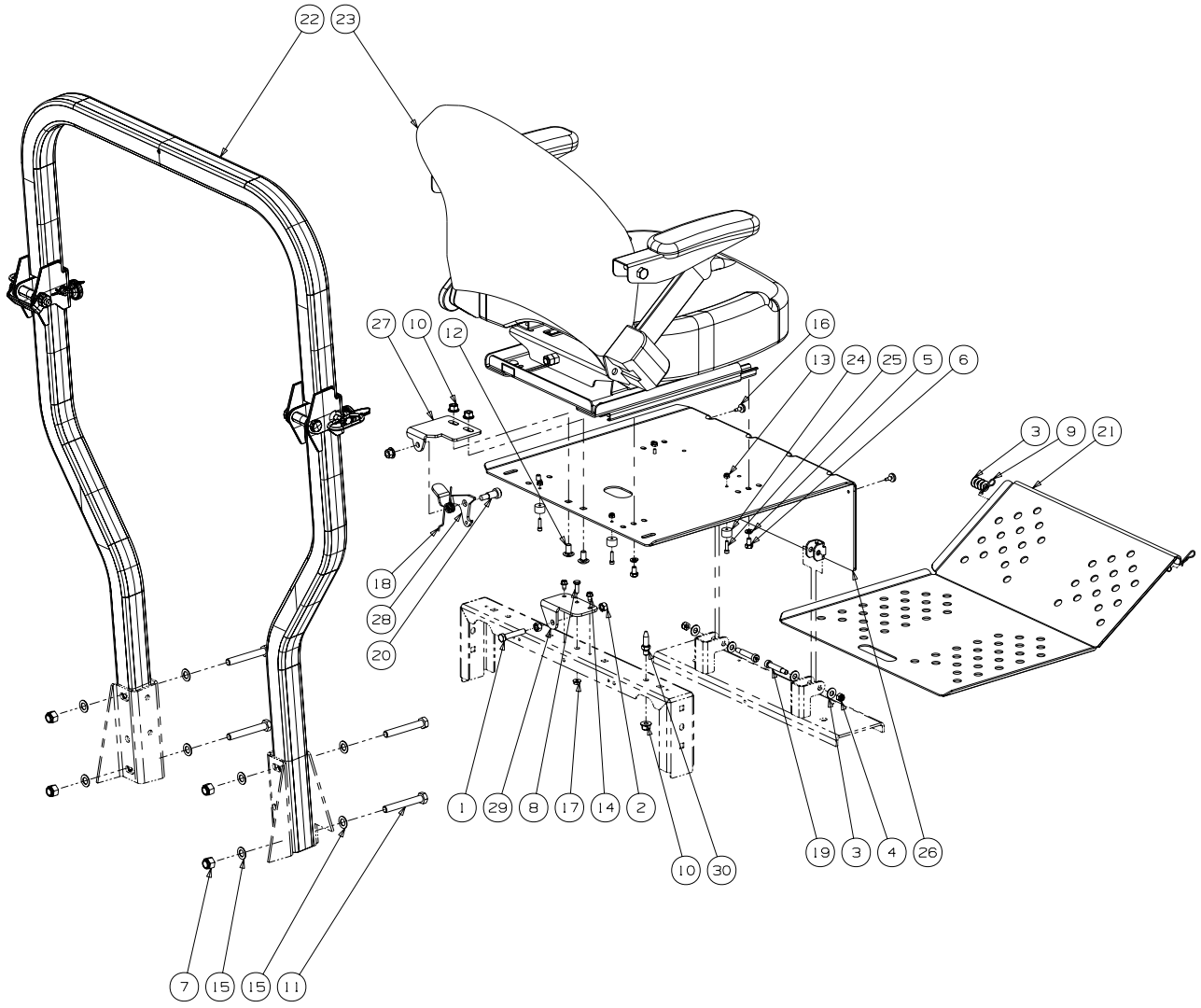

GD: 02002559-12/19/06

Ref. No.	Part No.	Description	Qty.	Ref. No.	Part No.	Description	Qty.
1	00002528	Hex Cap Screw 3/8-16 x 2.00	1	16	01001170	Rubber Bumper, .62 OD x .22 Thick	2
2	00006131	Hex Nut, 3/8-16	2	17	01002766	Lock Nut, 1/4-20	1
3	00012158	Washer	AR	18	01008140	Deck Lift Spring, Left Hand	1
4	00012165	Nylock Nut, 5/16-18	2	19	01009459	Shoulder Bolt, .375 x 1.50	2
5	00012168	Lock Washer, 5/16	4	20	02002091	Shoulder Bolt, 1/2 x 3/4, 3/8-16	1
6	00012178	Hex Cap Screw, 5/16-18 x 1/2	4	21	02002335	Floor Panel Assembly	1
7	00012428	Nut, 1/2-13, Nylon Insert	4	22	02002714	Foldable Rops Assembly	1
8	00013131	Screw, Hex, Cap, 1/4-20 x .75	1	23	02002942	Seat w/ Seat Belt & Suspension	1
9	00021956	Hair Pin, 3/8-1/2	2	24	02002963	Rubber Stop with Washer	4
10	00022560	Flange Lock, Hex Nut, 3/8-16	4	25	02002964	Standard Cap Screw, #10-24 x .75	4
11	01000226	Hex Cap Screw, 1/2-13 x 3.50	4	26	02002344	Seat Plate Assembly	1
12	01000372	Carriage Bolt, 3/8-16 x .75 Long	2	27	02003748	Seat Latch Bracket	1
13	01000523	Nut, #10-24, Nylon Lock	4	28	02003732	Latch Lever Bracket	1
14	01000628	Screw, TT, 1/4-20, 0.5, Hex Index Washer	2	29	02003739	Latch Bracket	1
15	01000873	Washer, .536 ID x .930 OD x .05	8	30	02003745	Adjustable Stud	1

23HP Kawasaki Engine Assembly - Figure 12

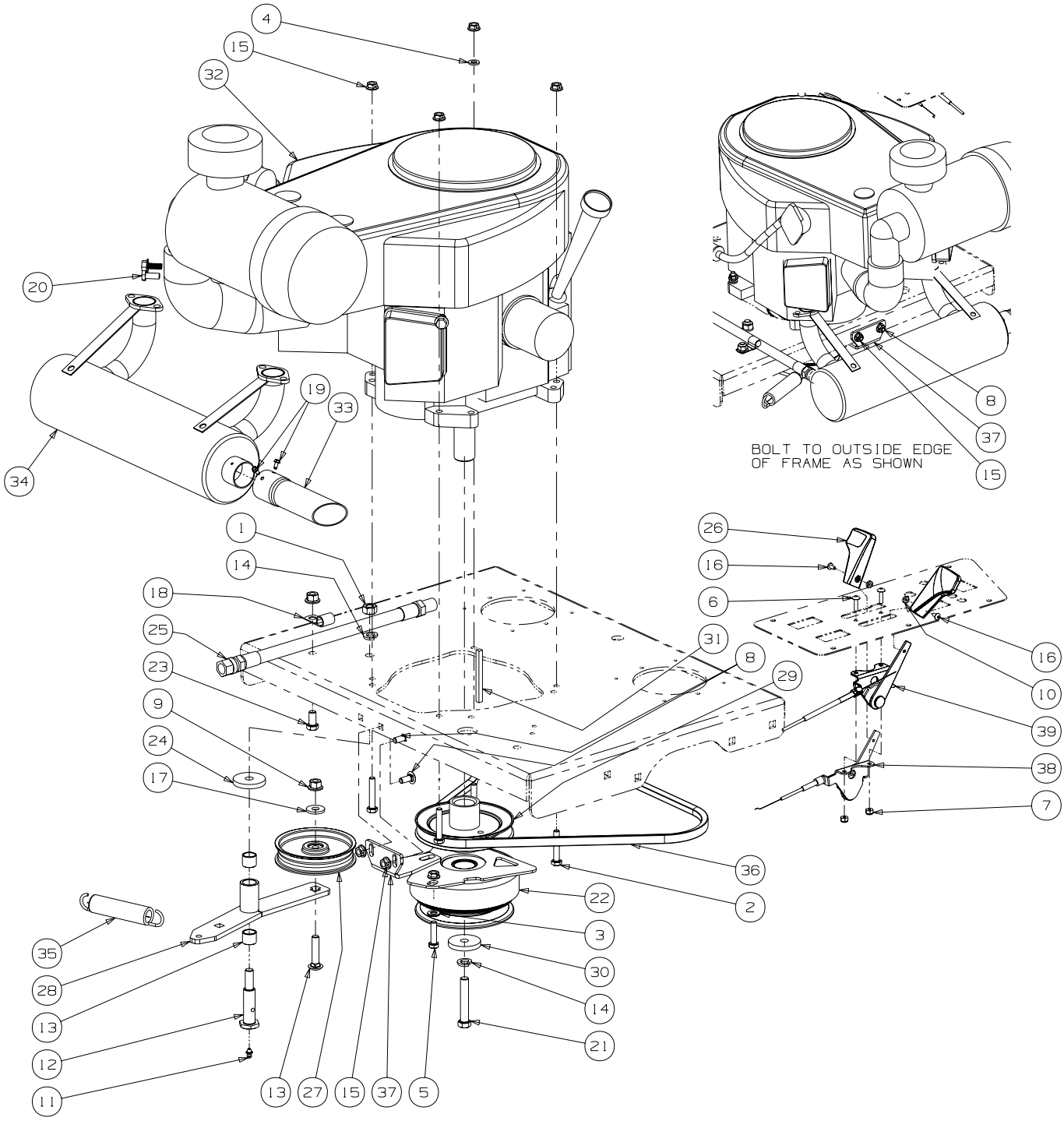

Description	Part Number
Air Filter	KM-11013-7020
Air Filter (Inner)	KM-11013-7019
Fuel Filter	KM-49019-7001
Oil Filter	KM-49065-2078
Spark Plug (23HP)	KM-BPR4ES

GD: 02003523-11/08/06

23HP Kawasaki Engine Assembly - Parts List for Figure 12

Ref No	Part No.	Description	Qty.
1	00005763	Hex Nut, 7/16-14	1
2	00006129	HHCS, 5/16-18, 1-3/4	4
3	00009812	Flat Washer, 5/16	1
4	00012169	Flat Washer, .320 ID x .591 OD x .078	1
5	00013116	HHCS, 5/16-18 x 1-1/4	1
6	00014602	Round Hd. Machine Screw, 10-32 x 3/4	2
7	00014608	Lock Nut, Nylon Insert, 10-32	2
8	00020508	Carriage Bolt, 5/16-18 x .75	2
9	00022560	Flange Lock, Hex Nut, 3/8-16	2
10	00060056	Nut Washer, W/Star, 8-32	2
11	00060078	Grease Fitting, 1/4-28 x 3/16	1
12	01000302	Shoulder Screw, 7/16-14	1
13	01000364	Hex Carriage Screw, 3/8-16, 1.75	1
14	01000389	Lock Washer, 7/16	2
15	01000635	Hexflange Lock Nut, 5/16-18	7
16	01000721	Machine Screw, 8-32, .375	2
17	01000723	Flat Washer, .406 ID, 1.0 OD, .105	1
18	01000728	Clip, Heat Shield Cable	1
19	01000811	Screw, #8-32 x 0.375	2
20	01000981	Hex Head Cap Screw, M10 x 1.25, 20mm	1
21	01001395	Capscrew, 7/16-20 x 2.50	1
22	01001979	Clutch Brake, 1.125 ID	1
23	01002601	Hex Cap Screw, 3/8-16, .750	1
24	01003269	Flat Washer, 7/16 ID x 1.75 OD x .25	1
25	01003283	Oil Drain Hose	1
26	01004004	Control Throttle Knob	2
27	01004081	Flat Pulley with Flanges	1
28	01005006	Engine Idler Arm Assembly Includes	1
	01000308	Bearing	2
29	01005104	Pump Drive Pulley	1
30	01005314	Flat Washer, 7/16 ID x 1.75 OD x .25	1
31	01005856	Key, 1/4 x 1/4 x 3	1
32	01008523	23HP Engine, Kawasaki	1
33	01008623	Muffler Accessory Exhaust Tube	1
34	01009299	Muffler Accessory, Kawasaki	1
35	01009635	Extension Spring, .98 OD x 5.00	1
36	02000068	V Belt, A Section x .48.5	1
37	02001994	Retainer Clutch Assembly, Ogura	1
38	02003421	Throttle, Control Cable	1
39	02003422	Choke, Control Cable, 43.0	1

Note: Engine Oil 15w40

Lift Assembly - Figure 13

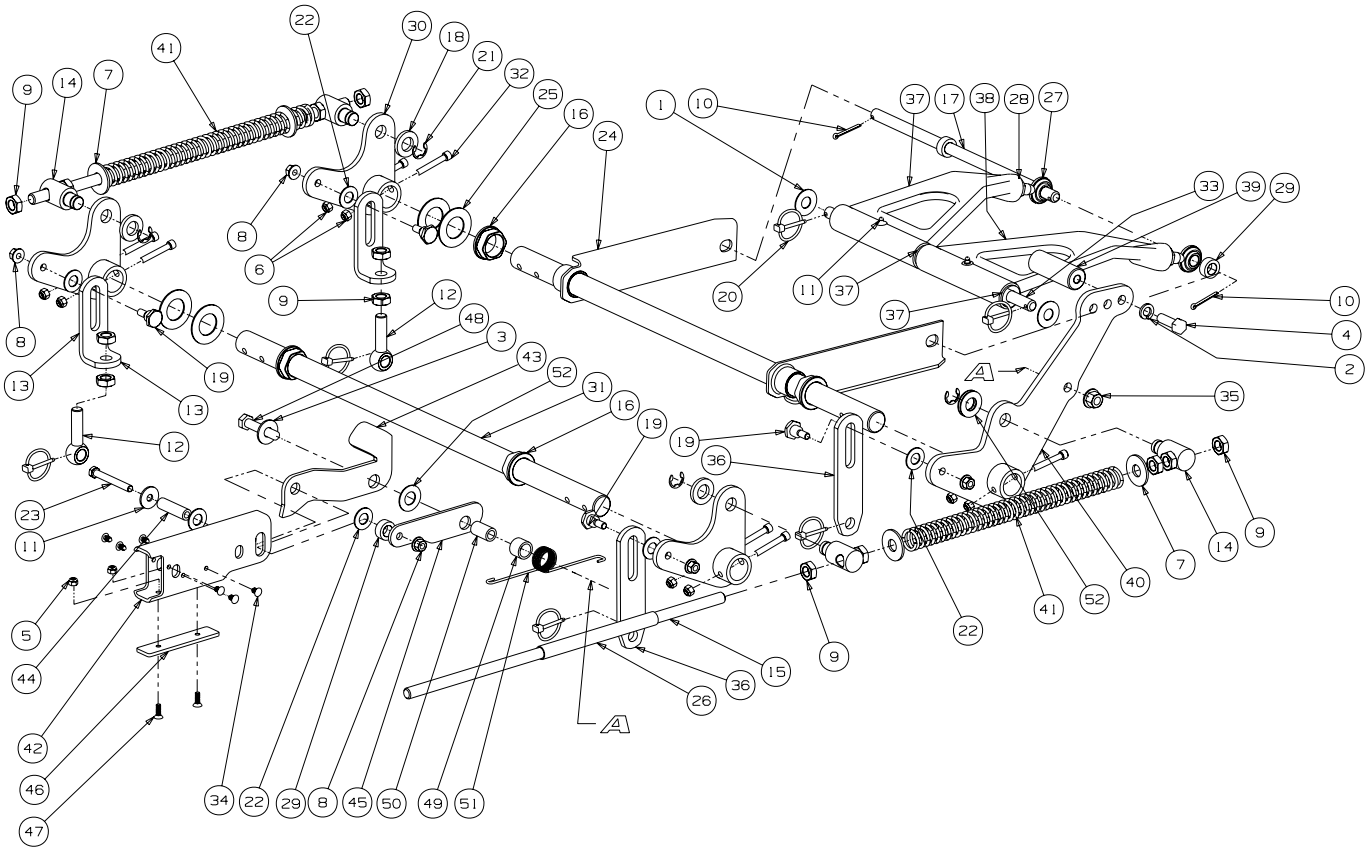

GD: 02002660-10/31/06

Lift Assembly - Parts List for Figure 13

Ref. No.	Part No.	Description	Qty.
1	00002766	Washer, 1.5 x .655 x .055	2
2	00010734	Lock Washer, 1/2	1
3	00011459	Flat Washer, 1/2	1
4	00011951	Hex Cap Screw, 1/2-13 x 1.50	1
5	00012152	Lock Nut w/Nylon Insert	2
6	00012165	Nut, 5/16-18, Nylock	8
7	00013432	Flat Washer, 5/8	4
8	00022560	Hex Nut, Flange Lock, 3/8-16	5
9	00035632	Jam Nut, 5/8-11	14
10	00060018	Cotter Pin, 3/16 x 1-1	2
11	01000872	Flat Washer, 1.25 x .411 x .100	1
12	01001744	Eye Bolt, 5/8ID	2
13	01007255	Eye Bolt Mount Link, 5/8 ID	2
14	01001855	Ferule Lift	4
15	01001857	Lift Connector Rod	2
16	01001930	Hex Flange Bearing, 1.25 ID	4
17	01002586	Front Lift Link, Rod Mount	1
18	01003123	Spacer, .812 ID x .268 Lg.	3
19	01003535	Shoulder Screw, 0.625 OD x .437 Lg.	4
20	01003993	Linch Pin, 3/16 Dia.	6
21	01003994	E Clip, 3/4 Dia.	4
22	01004003	Nylon Flat Washer, 5/8	6
23	01004127	HHCS, 3/8-16, 3.00	1
24	01005569	Front Frame Strut Assembly	2
25	01006408	Flat Washer, 1.25 ID	4
26	01006823	Hose, 5/8 ID 13/16 OD, 8" LG	2
27	01007487	Rod End, Male	2
28	01007526	Jam Nut, 5/8-18	2
29	01007527	Spacer, .630 ID x 1.06 OD x .440	3
30	01008206	Bellecrank Weldment Assembly	3
31	01007681	Deck Lift Shaft	2
32	01007962	Socket Head CapScrew, 5/16-18 x 2	8
33	01008453	Lift Link Rod	1
34	01008801	Rivet, 1/4 x 5/8	6
35	01010119	Nut, 1/2-13, FlangeLock	1
36	02003566	Deck Link	2
37	02002708	Bearing Lift Brace Assembly, Left Hand includes:	1
	00060078	Grease Fitting	1
	02002384	Bearing	2
38	02002709	Bearing Lift Brace Assembly, Right Hand includes:	1
	00060078	Grease Fitting	1
	02002384	Bearing	2
39	02002596	Deck Lift Foot Pedal	1
40	02002595	Deck Lift Foot Pedal Weldment	1
41	02002959	Lift Compression Spring	2
42	02003050	Lift Tube, 3.0 x 1.5	1
43	02003042	Lift Link Bracket	1
44	02003043	Spacer, .375 ID x .625 OD x 1.53	1
45	02003511	Yoke Plate	1
46	02003501	Lift Wear Plate	1
47	02003505	Flat Head Cap Screw, 1/4-20 x .75	2
48	02003585	HHCS, 1/2-13 x 2.50	1
49	02003586	Spacer, .76 ID x 1.0 OD x .75	1
50	02003587	Spacer, .50 ID x .75 OD x 1.313	1
51	02003588	Torsion Spring, .120 Wire x 1.32 OD	1
52	736-0188	Washer, .76 x 1.49 x .06	3

23HP Electrical Assembly Kawasaki - Figure 14 and Parts List

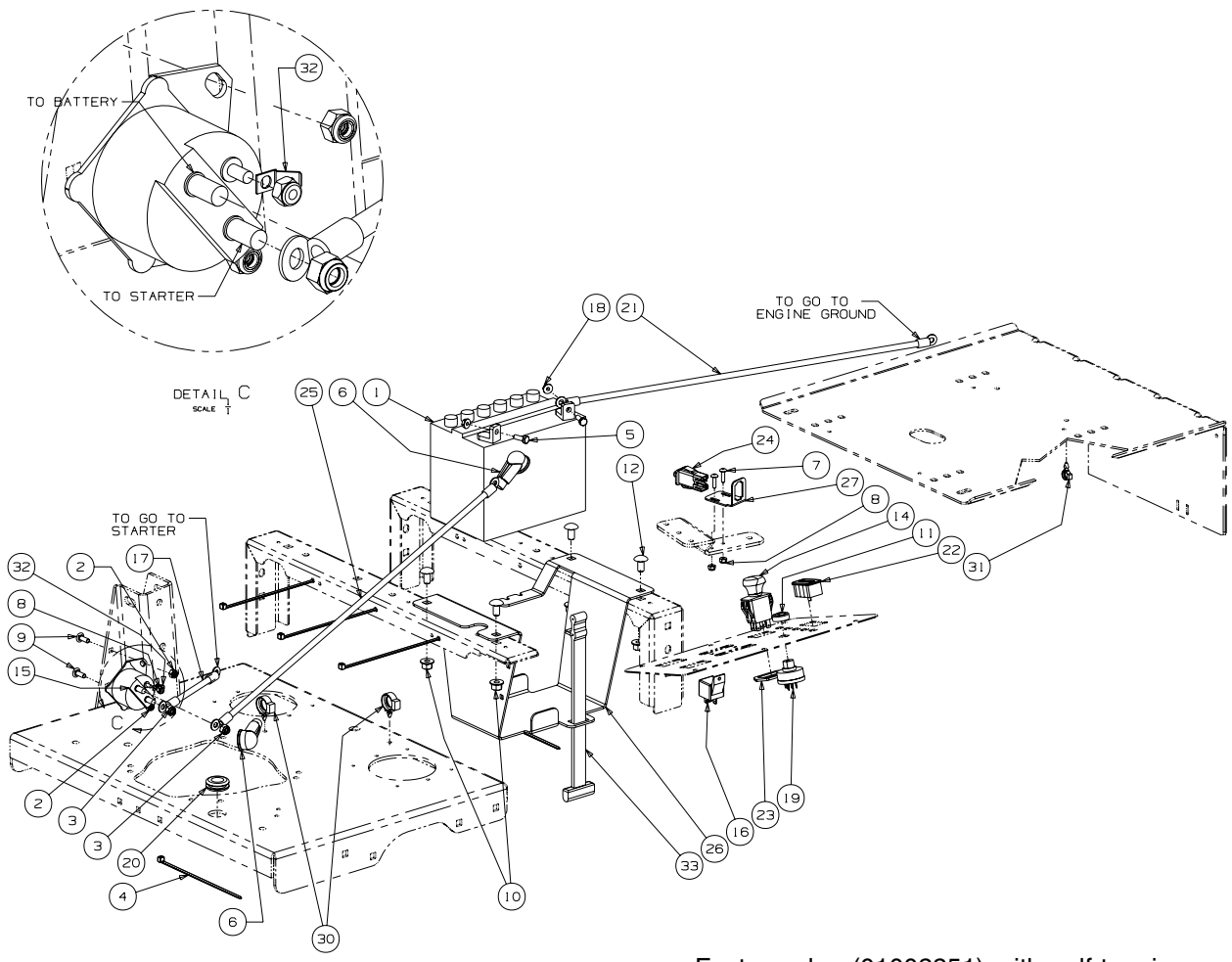

Fasten relay (01002251) with self-tapping screw (01000628) on LH control panel shown in Fig. 9.

GD: 02002560-12/15/06

Ref. No.	Part No.	Description	Qty.	Ref. No.	Part No.	Description	Qty.
1	00012032	Battery, 12V 225CCA 30 Min	1	18	01002766	Hex Flange Lock Nut, 1/4-20	2
2	00012152	Lock Nut w/Nylon Insert	2	19	01003581	Switch, Ignition, 6 Pin	1
3	00012165	Nylock Nut, 5/16-18	2	20	01004040	Grommet, .75 ID	1
4	00012470	Tie, Cable, 3/16 x .05 x 7.4"	5	21	01004078	Cable, Battery Black, 28"	1
5	00013131	Screw, Hex, Cap, 1/4-20 x .75	2	22	01005389	Meter, Hour	1
6	00013258	Boot, 1" OD Rubber Battery-PST, Red	2	23	01009905	Bracket, PTO Switch Retainer	1
7	00014602	Round Hd. Machine Screw, 10-32 x 3/4	2	24	02000024	Switch, Safety N.O./N.C.	1
8	00014608	Nut, Lock, Nylon Insert, #10-32	3	25	02002059	Cable, Battery Red, 42"	1
9	00017584	Carriage Bolt, 1/4-20 x .750	2	26	02002552	Battery Bracket	1
10	00022560	Hex Nut, Flange Lock, 3/8-16	4	27	02002592	Control/Brake Panel Switch	1
11	00032097	Nut, W/Cap, 5/8-32 Ignition	1	28	02002822	Wire Harness Adaptor	1
12	01000372	Carriage Bolt, 3/8-16 x .75 Long	4	29	02002824	Harness Assembly (not shown)	1
13	01001811	Hourmeter, Harness (not shown)	1	30	02003775	Electrical Conduit Clip, 5/8	2
14	01002111	Switch, Electric, PTO	1	31	02003038	Electrical Conduit Clip, 3/8	1
15	01002228	Solenoid Magnetic Switch	1	32	02003533	Terminal Tab, 1/4" Blade	1
16	01002251	Relay, 12V 40A	1	33	723-3064	Strap, Battery	1
17	01002253	Cable, Battery Red, 5"	1				

Decal Map

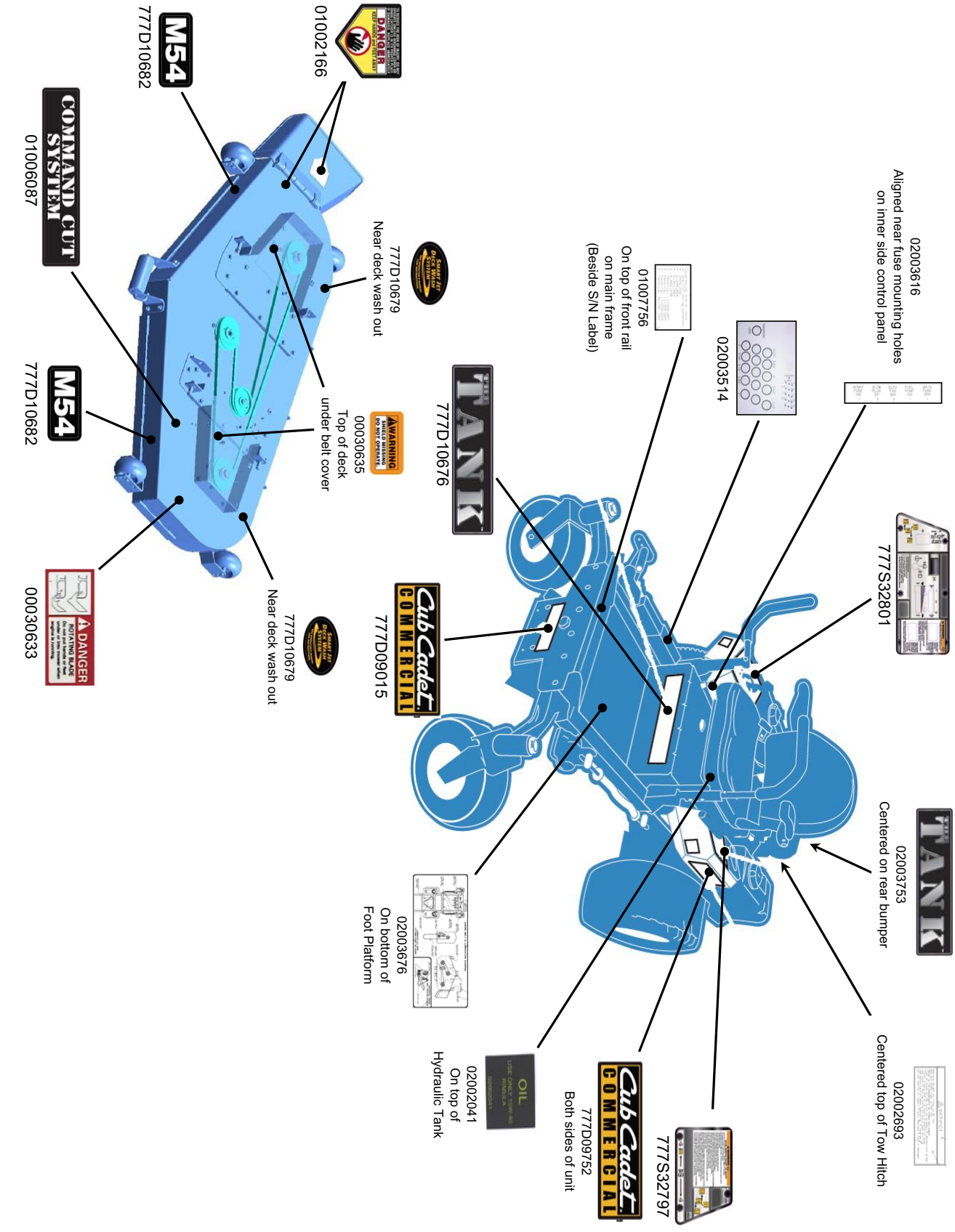
02003616
Aligned near fuse mounting holes on inner side control panel
02003514
01007756
On top of front rail on main frame (Beside S/N Label)
777S32801
777D10676
02003753
Centered on rear bumper
02002693
Centered top of Tow Hitch
777D09015
02003676
On bottom of Foot Platform
02002041
On top of Hydraulic Tank
777D09752
Both sides of unit
777S32797
01002166
777D10679
Near deck wash out
00030635
Top of deck under belt cover
777D10682
01006087
777D10682
00030633
777D10679
Near deck wash out

Notes

Notes



Cub Cadet Commercial
P.O. Box 368023
Cleveland, OH 44136

Form No. 02003429 Rev. 07-2 02/14/2007