Cub Cadet®
COMMERCIAL

Hydrostatic Zero-Turn Commercial Riding Mower

Professional Turf Equipment

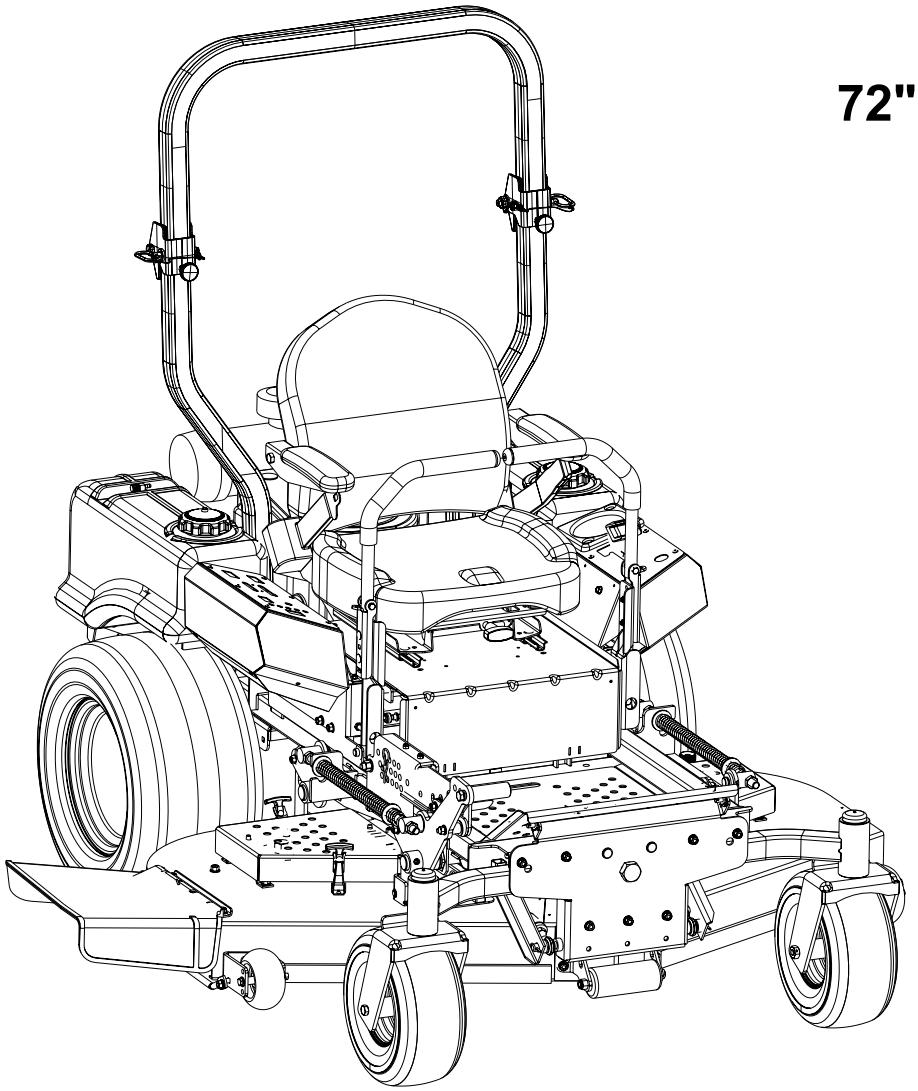

72" Fabricated Deck

ILLUSTRATED PARTS LIST

TABLE OF CONTENTS

Frame Assembly 3
72" Fabricated Cutter Deck. . . . . 4 and 5
72" Spindle Assembly. . . . . 6 and 7
Hydro Hose and Pump Assembly. . . . . .8 and 9
Brake Assembly . . . . . 10 and 11
Fuel Tank Assembly 12
Rear Bumper 13
Front Caster Assembly . . . . . 14 and 15
Control Assembly . . . . . 16 and 17
Wheel Assembly. 18
Seat/Floor Panel Assembly 19
37 HP Kawasaki Engine Assembly. . . . . 20 and 21
Electrical Assembly Kawasaki . . . . . 22 and 23
Lift Assembly . . . . . 24 and 25
FXT00V 37HP Engine Breakdown 26-37
Right and Left Hand Wheel Motor Breakdown . . . . . 38 and 39
Right Hand BDP-12 Hydraulic Pump Breakdown. . . . . 40 and 41
Left Hand BDP-12 Hdraulic Pump Breakdown. . . . . 42 and 43
Decal Map 44

MODELS LISTED IN THIS MANUAL

37HP Tank

53AI8CT8050

Frame Assembly- Figure 1 and Parts List

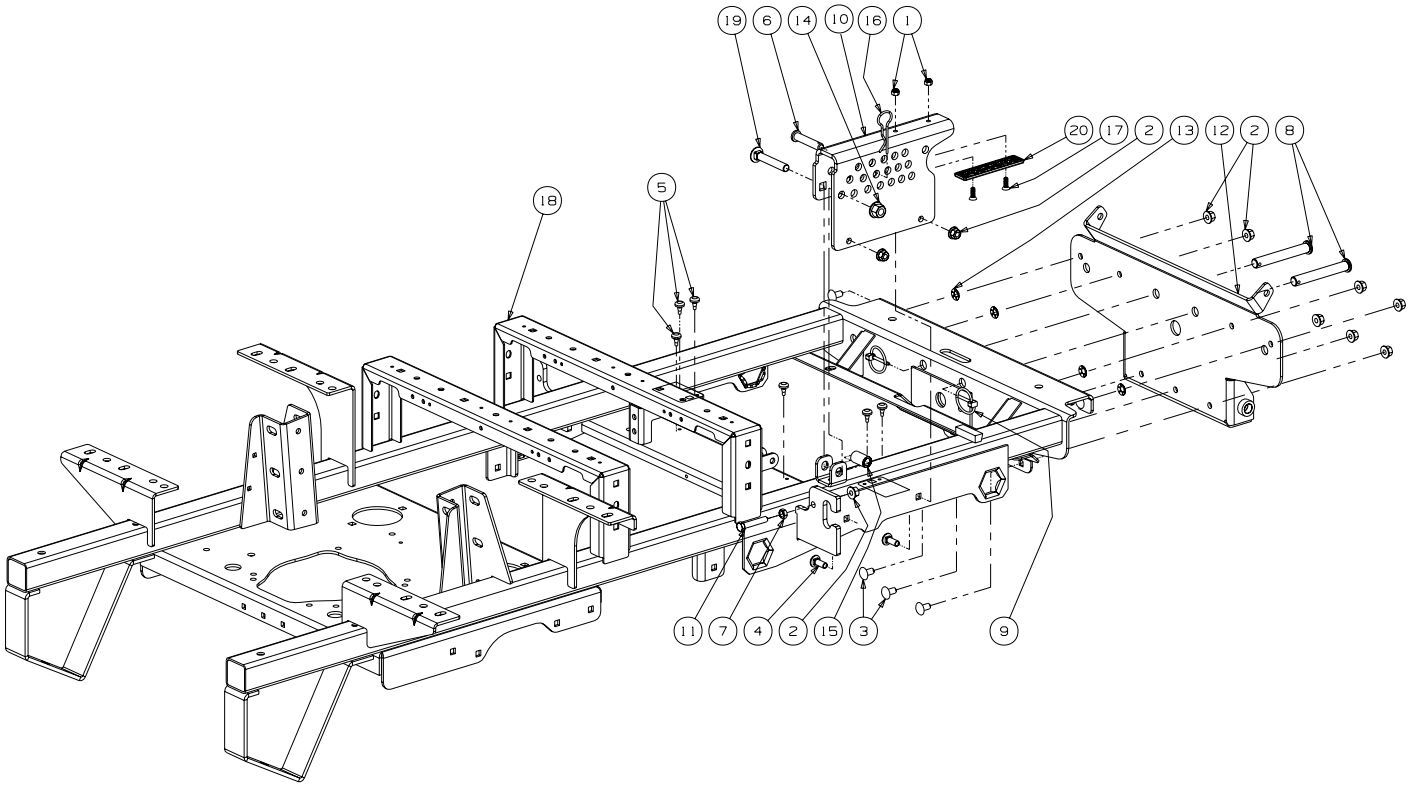

GD: 02005313-12/20/07

Ref. No.	Part No.	Description	Qty.
1	00012152	Lock Nut w/Nylon Insert	2
2	00022560	Hex Nut, 3/8-16 Flange Lock	10
3	01000372	Carriage Bolt, 3/8-16 x .75 Long	7
4	01000643	Carriage Bolt, 3/8-16 x 1	2
5	01001170	Rubber Bumper, .62 OD x .22 Thick	6
6	01001776	Clevis Pin, .500 Dia. x 2.50 Lg.	1
7	01002511	Nut, 3/8-16, Jam	1
8	01003282	Clevis Pin, .625 Dia x 4.375 Long	2
9	01003993	Linch Pin, 3/16 Dia.	2
10	02005101	Lift Index Bracket	1
11	01005810	Hex Cap Screw 3/8-16 x 2.00	1
12	01007776	Bracket Assembly, Frame, Front	1
13	01008225	Push Retainer, 3/8	4
14	01010119	Nut, 1/2-13, Flangelock	1
15	02002655	Spacer, .51 ID x .75 OD x 1.40	1
16	02003074	HitchPin, .120 Dia. x 3.0	1
17	02003505	Flat Head Cap Screw, 1/4-20 x .75	2
18	02003536	Frame Assembly	1
19	02003563	Carriage Bolt, 1/2-13 x 3.00	1
20	02003749	Wear Plate, 1.25 x 5.00	1

72" Fabricated Cutter Deck - Figure 2

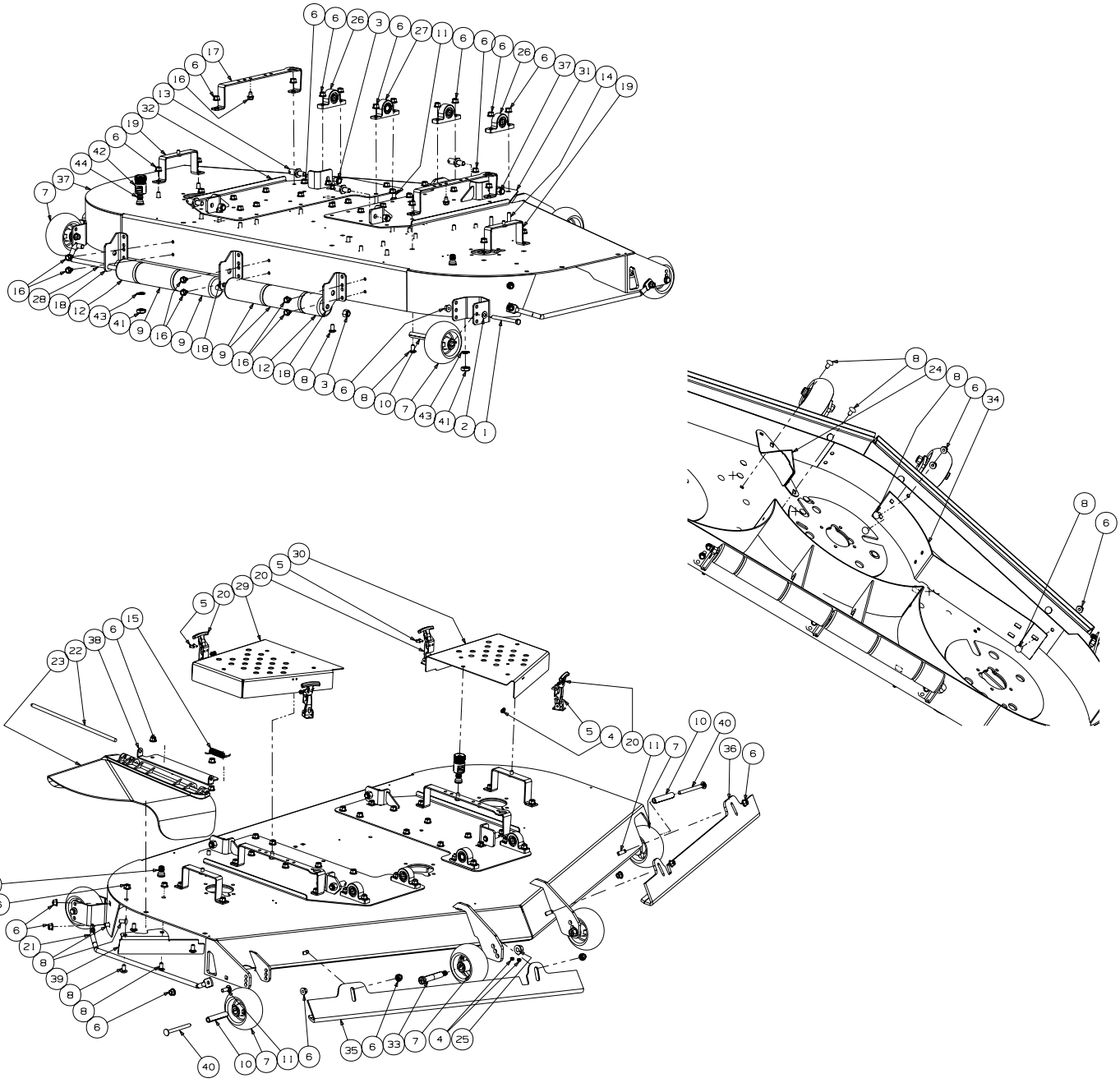

GD: 02004857-01/24/08

72" Fabricated Cutter Deck - Parts List for Figure 2

Ref. No.	Part No.	Description	Qty.
1	00011925	Hex Cap Screw, 3/8-16, 4.00	2
2	00012158	Flat Washer, 3/8	2
3	00012428	Lock Nut, Nylon Insert, 1/2-13	5
4	00014608	Lock Nut, Nylon Insert, #10-32	16
5	00017778	Phillips Head Screw, #10-32 x 1/2	16
6	00022560	Flange Lock Hex Nut, 3/8-16	54
7	01000343	Complete Wheel, 5.00 Dia.	6
8	01000372	Carriage Bolt, 3/8-16 x .75 Lg.	35
9	01000385	Front Roller	4
10	01000398	Wheel Spacer	4
11	01000643	Carriage Bolt, 3/8-16 x 1	6
12	01001169	Grass Catcher Roller	2
13	01001745	Pin, 5/8 Dia. x 1.2 Lg.	4
14	01002010	Carriage Screw, 3/8-16 x 1.25	7
15	01003253	Torsion Spring, 0.4ID x 2.16Lg	1
16	01004304	Hex Index Washer Screw, 3/8-16, .5	8
17	01004684	Belt Cover Support	2
18	01004707	Deck Roller Mount Bracket	3
19	01005438	Outer Belt Cover Support Assembly	2
20	01005869	T-Handle Latch Draw	4
21	01008526	Finger Guard	1
22	01009102	Pin, .375 x 14.06	1
23	01009705	Chute Deflector	1
24	01009842	Discharge Baffle Weldment	1
25	01010119	Nut, 1/2-13, Flangelock	2
26	02000109	Pillow Block, Steel	3
27	02000110	Pillow Block, Steel	1
28	02002800	J-Hook w/ Threaded Roller	1
29	02004410	Right Hand Deck Belt Cover	1
30	02004403	Left Hand Deck Belt Cover	1
31	02002911	Right Hand Deck Lift Bracket	1
32	02002912	Left Hand Deck Lift Bracket	1
33	02004833	Shoulder Bolt, .625 x 3.00 x 3/8-16	2
34	02005696	Baffle, 72" Adjustment	1
35	02004868	Right Hand Front Adjustment Skirt	1
36	02004869	Left Hand Front Adjustment Skirt	1
37	02004872	72" Deck Assembly	1
38	02004874	Chute Deflector Bracket	1
39	02005195	Chute Baffle	1
40	01008049	Carriage Bolt, 3/8-16 x 4.00	2
41	712_0641	Hex Nut, M16-1.5	2
42	721_04041	Water Nozzle Adaptor	1
43	736_0760	Lock Washer, 17 x 23.8 x 1.95	2
44	737_04003C	Deck Water Nozzle	2

72" Fabricated Deck Spindle Assembly - Figure 3

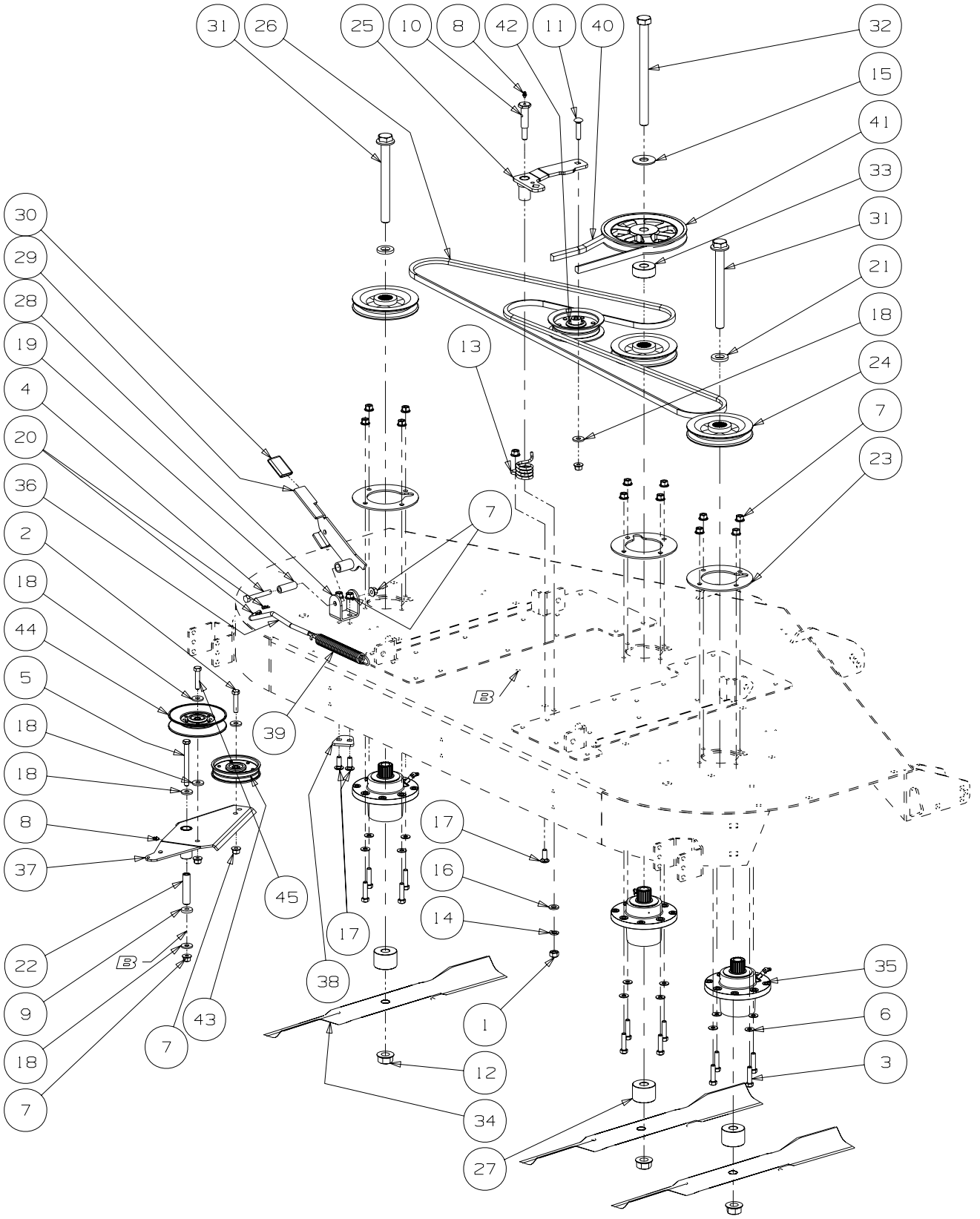

GD: 02004950-12/20/07

72" Fabricated Deck Spindle Assembly - Parts List for Figure 3

Ref. No.	Part No.	Description	Qty.
1	00005763	Hex Nut, 7/16-14	1
2	00008495	Hex Cap Screw, 3/8-16 x 1-3/4	1
3	00011438	Hex Cap Screw, 3/8-16 x 1-1/2	12
4	00011861	Hex Cap Screw, #/8-16 x 2-1/2	1
5	00011925	Hex Cap Screw, 3/8-16, 4.00	1
6	00012158	Flat Washer, 3/8	12
7	00022560	Flange Lock Hex Nut, 3/8-16	20
8	00060078	Grease Fitting, 1/4-28 x 3/16	2
9	00083192	Idler Washer	1
10	01000302	Shoulder Screw, 7/16-14	1
11	01000364	Hex Carriage Screw, 3/8-16, 1.75	1
12	01000380	Flange Hex Nut, 3/4-16	3
13	01000387	Torsion Idler Spring	1
14	01000389	Lock Washer, 7/16	1
15	01000392	Flat Washer, .781 ID 2.00 OD, .105	1
16	01000393	Flat Washer, .469 ID, .875 OD, .105	1
17	01000643	Carriage Bolt, 3/8-16 x 1	3
18	01000723	Flat Washer, .406 ID, 1.0 OD, .105	6
19	01002751	Spacer, .39 ID x .63 OD x 1.75	1
20	01002771	Cotter Pin, .072 x 1.12 Long	2
21	01003123	Spacer .812 ID x .268 LG	2
22	01003245	Spacer, .39 ID x .625 OD x 2.75	1
23	01004478	Aluminum Spindle Support Plate	3
24	01007499	V-Pulley, 5.75 OD	3
25	01007786	Idler Arm Assembly includes:	1
	01000308	Bearing Sleeve	2
26	01007937	V-Belt, B Section x 124.0 Lg	1
27	01008018	Spacer, .760 ID x 2.00 OD x .330	3
28	01008222	Tension Idler U-Bracket	1
29	01008247	Handle Tension Weldment	1
30	01008270	Tension Idler Handle Grip	1
31	01008542	Hex Cap Screw, 3/4-16, 7.50	2
32	01008543	Hex Cap Screw, 3/4-16, 9.50	1
33	01010014	Spacer, .76 ID x 2.0 OD x .790	1
34	02000568	Bahia Blade, 25.0, .756 ID	3
35	02000920	Aluminum Spindle Assembly	3
36	02001574	Spring Tension Rod	1
37	02003489	Idler Arm Assembly includes:	1
	01000308	Bearing Sleeve	2
38	02004063	Adaptor Plate	1
39	02004069	Extension Spring, .94 OD x 7.72 Lg	1
40	02004377	V-Belt, B Section x 107.0	1
41	02004379	V-Pulley, 7.450 OD x .750 Bore, Cast	1
42	02004447	Idler Pulley, 4.06 OD	1
43	02005077	Idler Pulley, 4.06 Dia.	1
44	02005079	Idler Pulley, 5.06 Dia.	1
45	00002528	Hex Cap Screw, 3/8-16 x 2.00	1

Hydro Hose and Pump Assembly - Figure 4

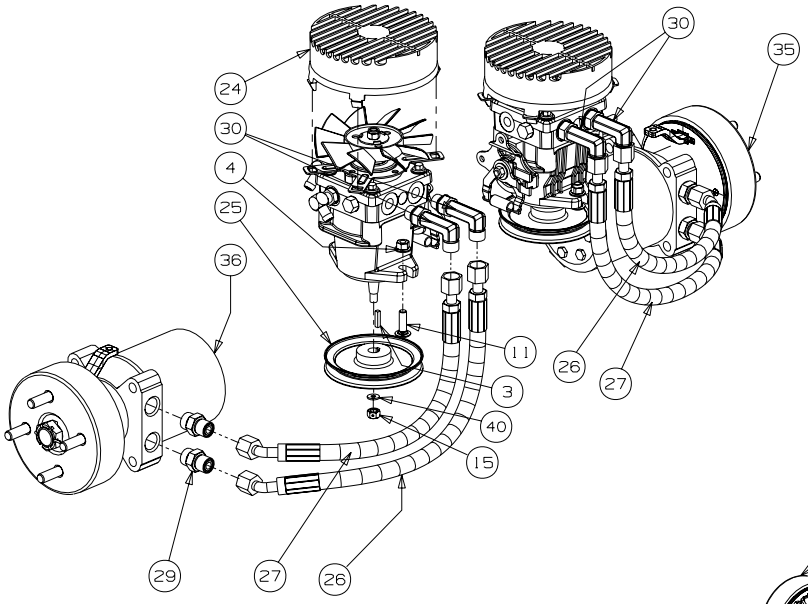

Pump & Motor Systems

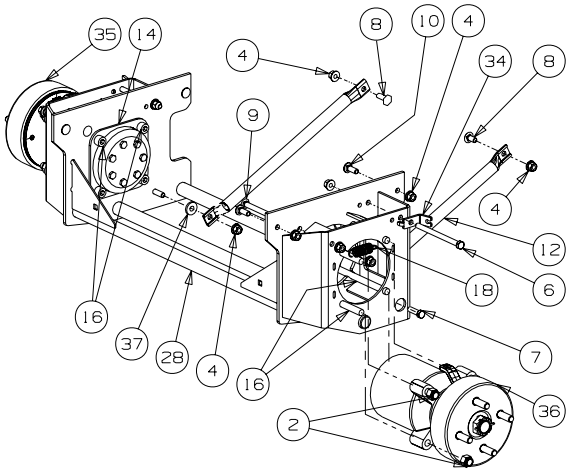

Motor Mount Systems

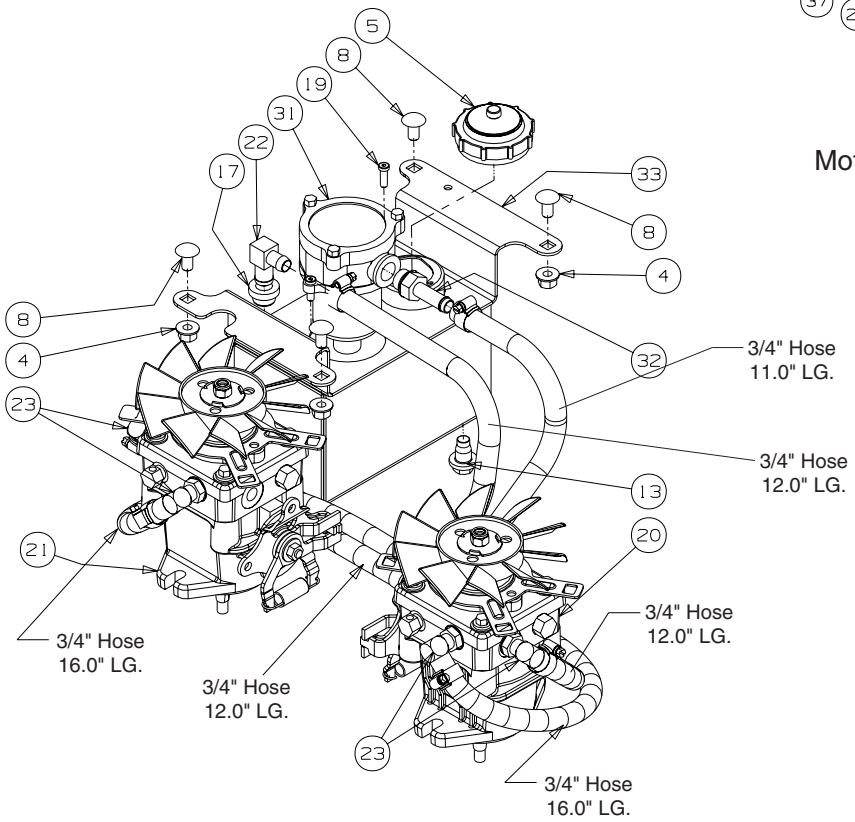

Pilot &Drain Systems

GD: 02004445-01/10/08

Hydro Hose and Pump Assembly- Parts List for Figure 4

Ref. No.	Part No.	Description	Qty.
1	02002392	Hose Clamp, 1/2	12
2	00012428	Washer lock 3/8 zinc	8
3	00020628	Key, 3/16" x 7/8"	2
4	00022560	Flange Lock Hex Nut, 3/8-16	22
5	00030261	Cap, Hydro Oil Tank	1
6	01002539	Hex Cap Screw 3/8-16 x 4.50	2
7	01000369	Hex Cap Screw, 3/8 -16 x 1.25	2
8	01000372	Carriage Bolt, 3/8-16 x .75 LG.	6
9	01009906	Carriage Bolt, 3/8-16 x 5.00	2
10	01000643	Carriage Bolt, 3/8-16 x 1	4
11	01002010	Carriage Screw, 3/8-16 x 1.25	4
12	01002593	Strut Frame	2
13	01004192	Oil Pan Drain Plug w/ Seal	1
14	01006948	Hydro Wheel Motor Backup Plate	2
15	01007309	Hex Nut, 3/8-24	2
16	01008449	Socket Head Capscrew, 1/2-13; 6-1/2	8
17	02000296	Grommet Fitting, .54 ID x .78 OD	1
18	02000401	Spring Extension, .740 OD x 2.656	2
19	02000841	Socket Low Head Cap Screw, 1/4-20 x 0.75	2
20	02000905	Hydro Pump, BDP-12, RH	1
	01009631	Kit, Fan	1
21	02000906	Hydro Pump, BDP-12, LH	1
	01009631	Kit, Fan	1
22	02001151	Fitting Elbow Spur, 5/8 x 1/2	1
23	02001160	Fitting Elbow, 9/16 x 1/2	4
24	02001169	Fan Pump Shroud	2
25	02001172	Hydro Pump Pulley	2
26	02001178	Short Pressure Hose Assembly	2
27	02001179	Long Pressure Hose Assembly	2
28	02004648	Hydro Motor Frame Assembly	1
29	02001715	Adaptor Fitting, 8 x 10	4
30	02002003	Adaptor, 8 x 8	4
31	02002257	Hydraulic In-Tank Filter includes:	1
	02002258	Replacement Filter	1
32	02002557	Fitting, 3/4 ORB x 1/2 Tube	1
33	02002701	Hydraulic Tank Assembly	1
34	02002899	Rear Cable Mounting Bracket	2
35	02004442	Hydro Motor, Left Hand Assembly w/ Brake & Drum	1
36	02004441	Hydro Motor, Right Hand Assembly w/ Brake & Drum	1
37	00083192	Idler Washer	2
38	--	Fuel Hose, .50 ID x .75 OD (in inches)	79
39	02001175	Tee Fitting, 1/2	2
40	00006168	Flat Washer, 3/8	2

NOTE: Lubricant, 02002058 Quarts, 2.00

Brake Assembly - Figure 5

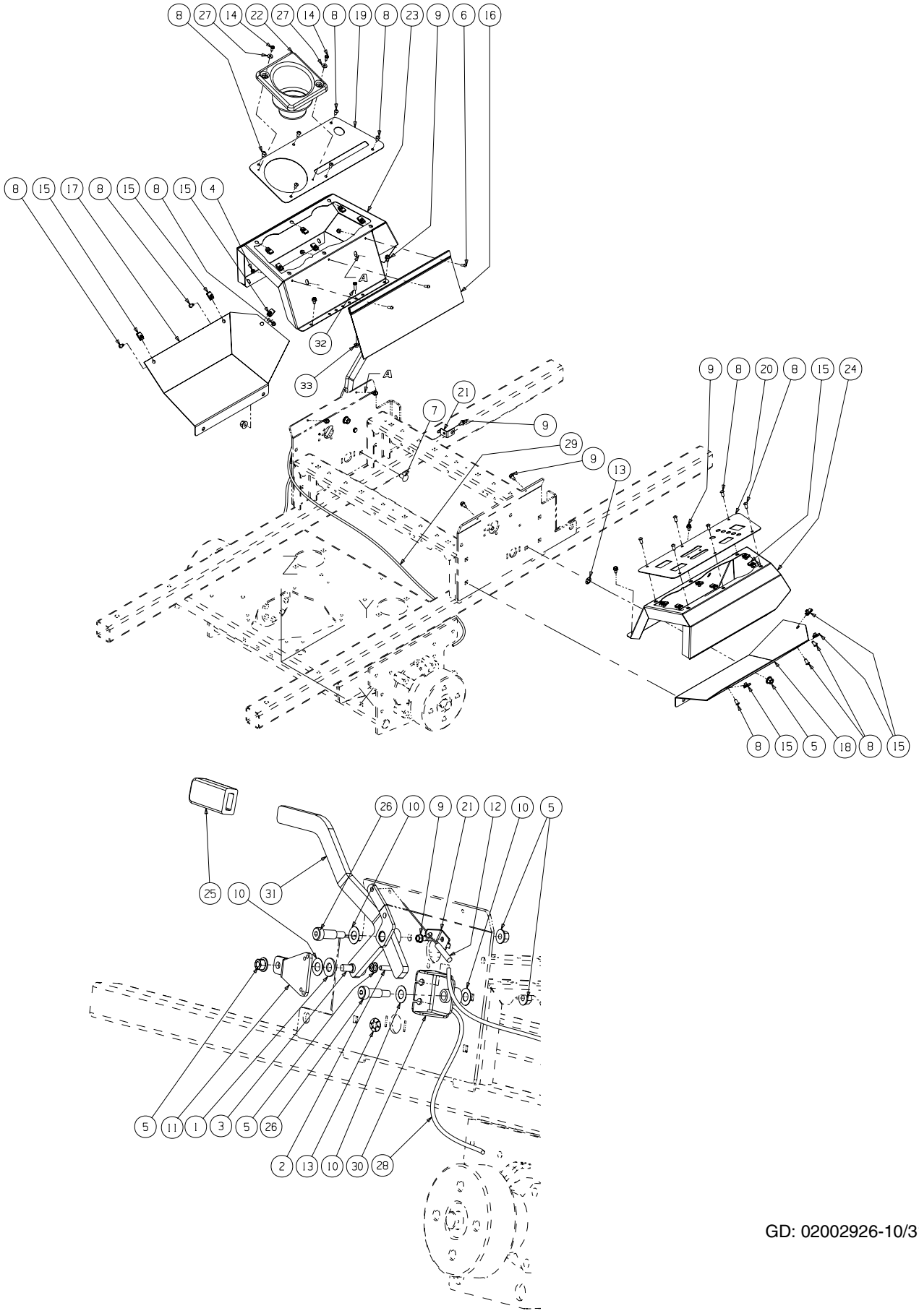

GD: 02002926-10/31/07

Brake Assembly - Parts List for Figure 5

Ref. No.	Part No.	Description	Qty.
1	00012577	Washer, 1/2 Zinc	1
2	01000643	Carriage Bolt, 3/8-16, 1.00	1
3	00011450	Shoulder Bolt, 1/2 x 1/2	1
4	00014608	Lock Nut, Nylon Insert, 10-32	3
5	00022560	Flange Lock Hex Nut, 3/8-16	6
6	00030906	Phillips Head Machine Screw, 10-32 x 5/8	3
7	01000372	Carriage Bolt, 3/8-16 x .75	2
8	01000443	Screw Button Head, 1/4-20 x .5	18
9	01000628	Screw, TT, 1/4-20, 0.5, Hex Index Washer	10
10	01000930	Washer, .508 ID x 1.0 OD x .020	4
11	02003841	Centering Bracket	1
12	01008198	Left Hand Brake Cable	1
13	01008225	Push Retainer, 3/8	2
14	01008531	Screw, #10-32 x 0.500	2
15	01008539	U-Nut, 1/4-20	18
16	02000362	Bag, Debris Storage	1
17	02002785	Lower Panel, LH	1
18	02002786	Lower Panel, RH	1
19	02002806	Control Panel Cover, LH	1
20	02002852	Control Panel Cover, RH	1
21	02002864	Brake Cable Mounting Bracket	2
22	02002874	Cup Holder	1
23	02002969	Control Panel, LH	1
24	02002970	Control Panel, RH	1
25	02003010	Parking Brake Grip	1
26	02003603	Shoulder Bolt, 1/2 x 1.00, 3/8-16	2
27	02003725	Washer, 3/16	2
28	02003770	Brake Cable, LH	1
29	02003774	Brake Cable, RH	1
30	02003776	Brake Cable Bracket	1
31	02005151	Brake Lever	1
32	00013131	Screw, Hex, Cap, 1/4-20 x .75	1
33	01002766	Lock Nut, 1/4-20	1

Fuel Tank Assembly - Figure 6 and Parts List

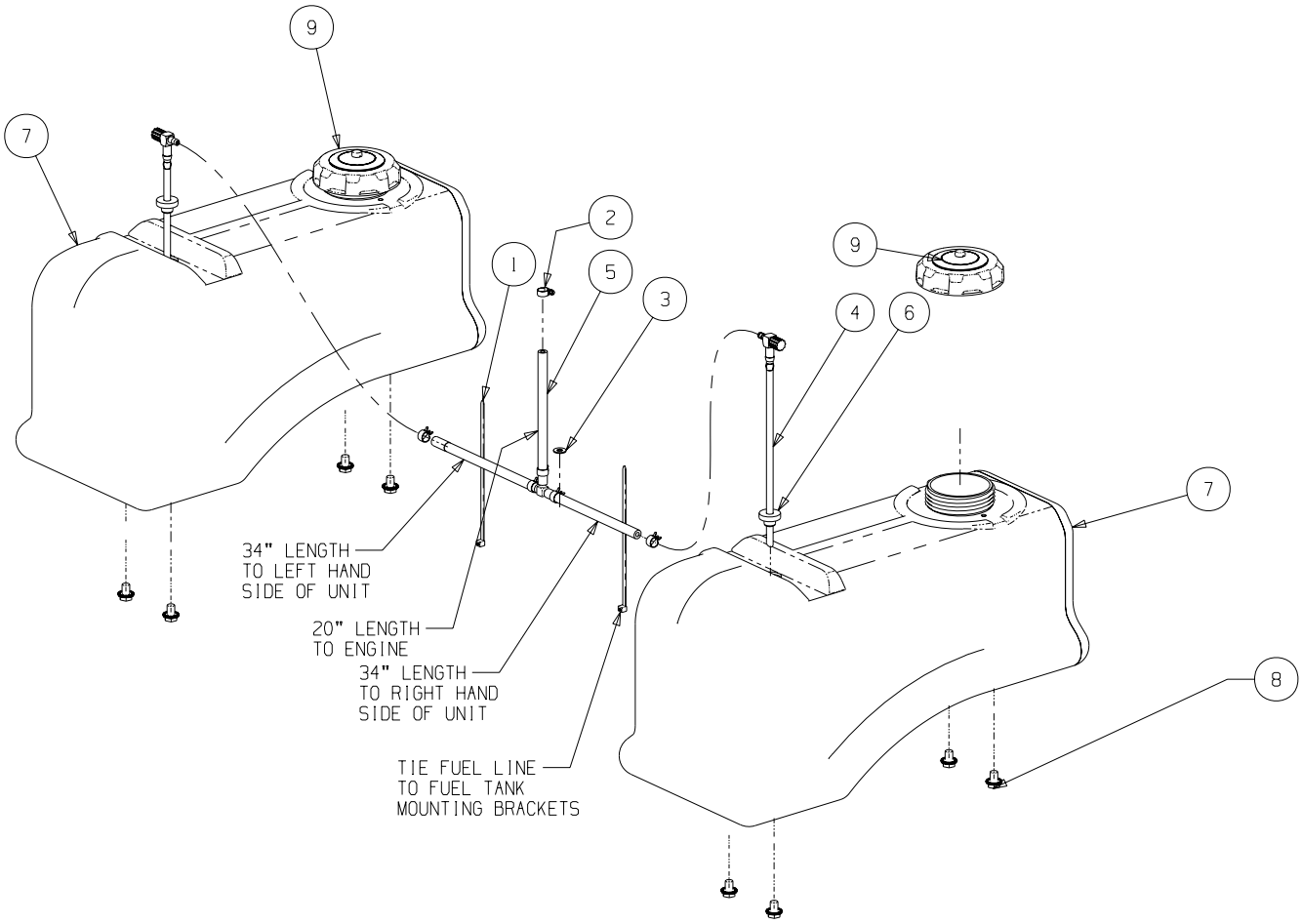

GD: 02001910-12/11/07

Ref. No.	Part No.	Description	Qty.
1	00012470	Cable Tie	2
2	01000215	Hose Clamp, SAE #4: 1/4-5/8, SS	1
3	01000600	Flat Washer, 1.4 x .630 x .0515	1
4	01007425	Fuel Fitting	2
5	02001908	Fuel Hose Assembly includes:	1
	--	Hose, 1/4" Fuel Line (in inches)	88
	00012235	Clamp, Union	5
	01003473	Tee Fitting, Fuel	1
6	02002253	Grommet, Fuel Tank	2
7	02003842	Fuel Tank	2
8	02005013	Hex Cap Screw, 3/8-16 x .500	8
9	751-3124D	Fuel Cap, 3.5	2

Rear Bumper - Figure 7 and Parts List

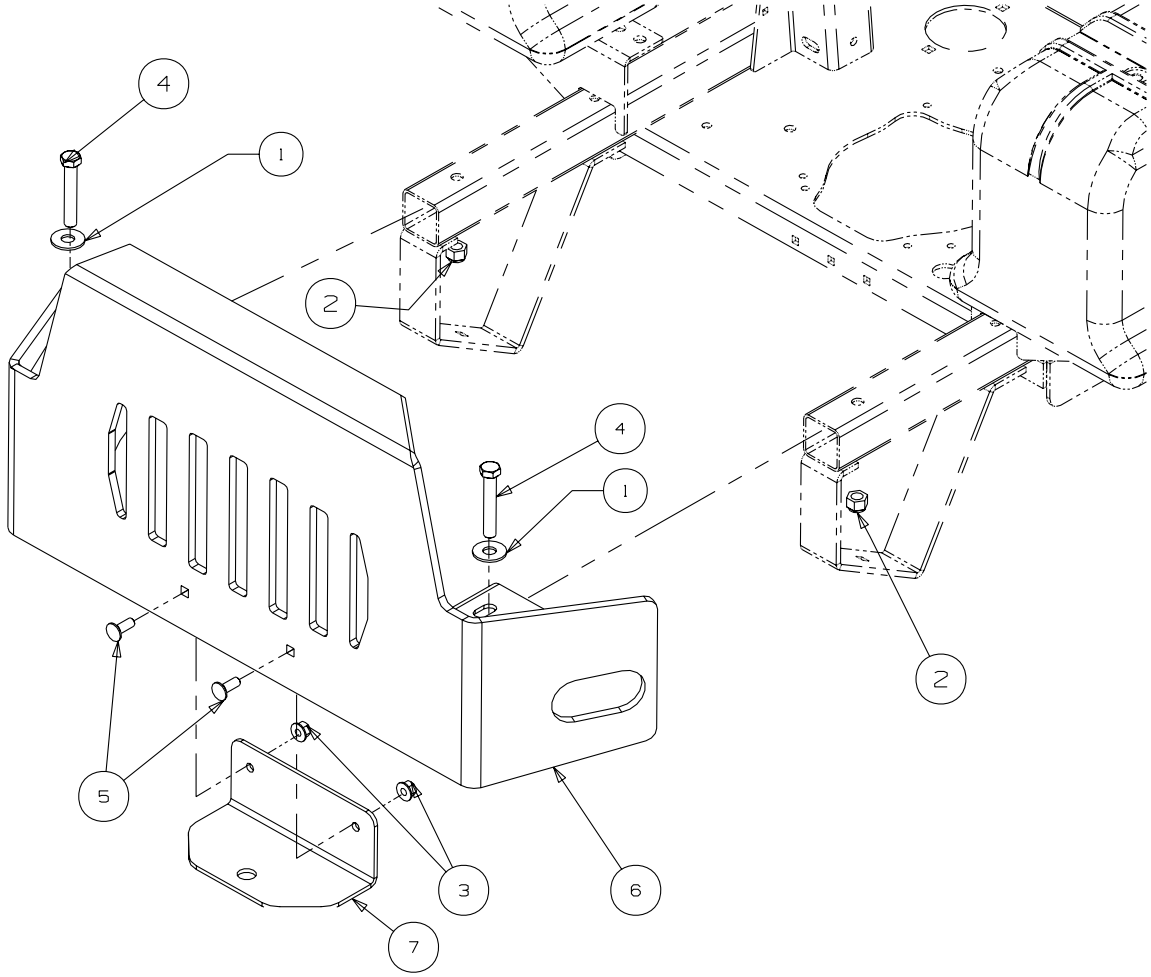

GD: 02005021-11/19/07

Ref. No.	Part No.	Description	Qty.
1	00011459	Flat Washer, 1/2	2
2	00012428	Hex Nut, 1/2-13, Insert Lock	2
3	00022560	Nut, Hex 3/8-16 Flange Lock	2
4	00030046	HHCS, 1/2-13, 3.00	2
5	01000643	Carriage Bolt, 3/8-16 x 1.00	2
6	02004118	Bumper Assembly	1
7	02004120	Hitch Bracket	1

Front Caster Assembly - Figure 8

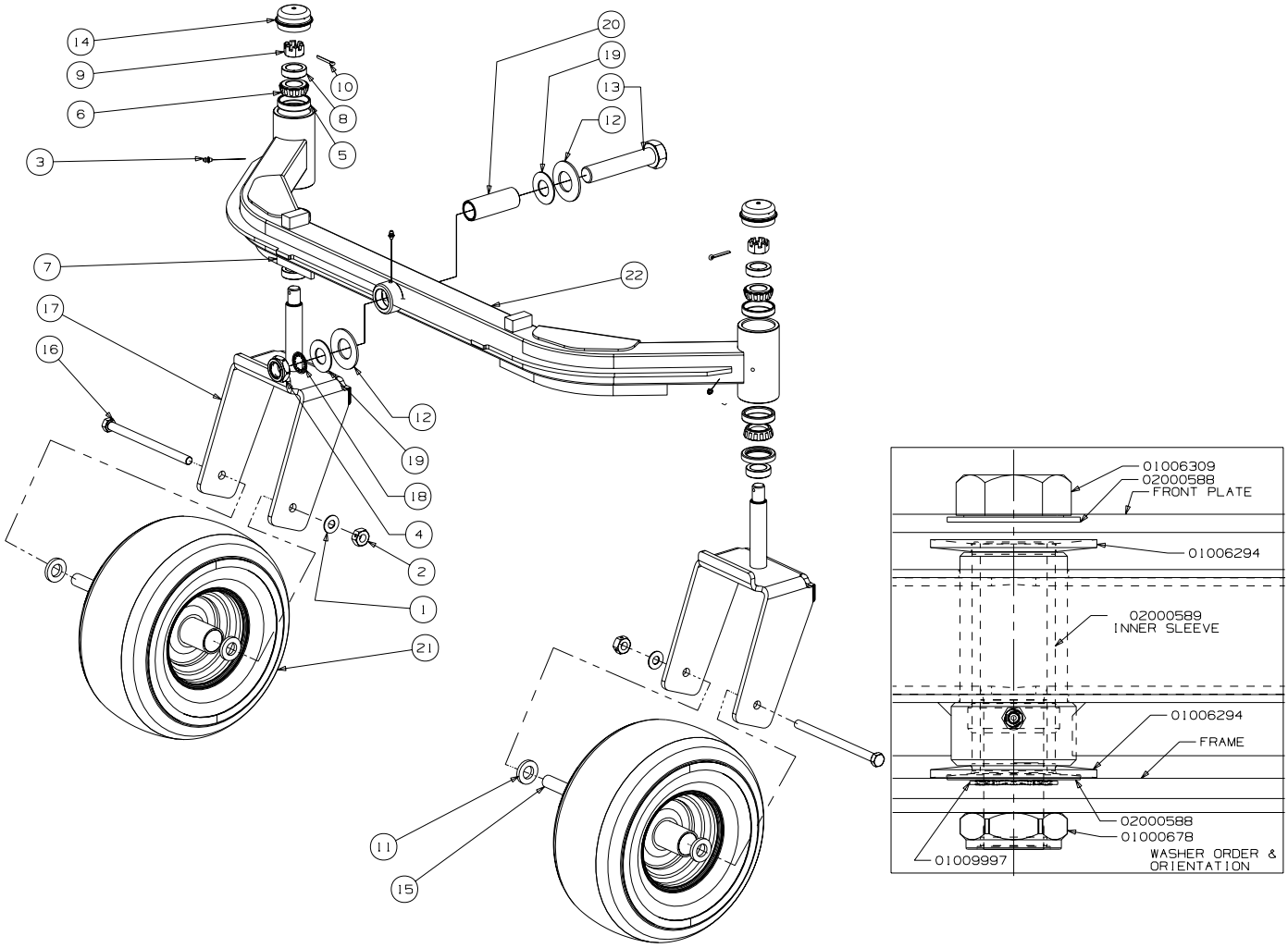

GD: 02005312-10/11/07

Front Caster Assembly - Parts List for Figure 8

Ref. No.	Part No.	Description	Qty.
1	00012577	Washer, 1/2 x 1 Shim	2
2	00023287	Nut, 1/2-20, Center Lock	2
3	00060078	Grease Fitting	3
4	01000678	Nut, Jam, 1.0-14, Insert Lock	1
5	01002620	Cup Bearing	4
6	01002621	Bearing Cone	4
7	01002622	Seal	2
8	01002624	Ring Seal	4
9	01002626	Slotted Nut, 3/4-16	2
10	01002627	Cotter Pin, 5/32, 1.25	2
11	01003123	Spacer, .812 ID x .218LG	4
12	01006294	Bell Washer, 1.25 ID x 2.5 OD x .180	2
13	01006309	Hex Cap Screw, 1-14 x 5.0	1
14	01006347	Grease Cap, 1.986 OD	2
15	01006912	Wheel Spacer	2
16	01006961	HHCS, 1/2-20, 7.50	2
17	01007342	Yoke, Caster Wheel	2
18	01009997	Retainer Extension, Self Locking	1
19	02000588	Flat Washer, 1.00 ID x 2.00 OD x .075	2
20	02000589	Spacer, 1.005 ID x 1.25 OD x 3.6	1
21	02002821	Wheel, 13 x 6.50 x 6.0, Beige, includes	2
	02002108	Tire	1
	02002106	Roller Bearings (per tire)	2
	02002107	Retainer Bushings (per tire)	2
22	02005308	Front Axle Assembly	1

Control Assembly- Figure 9

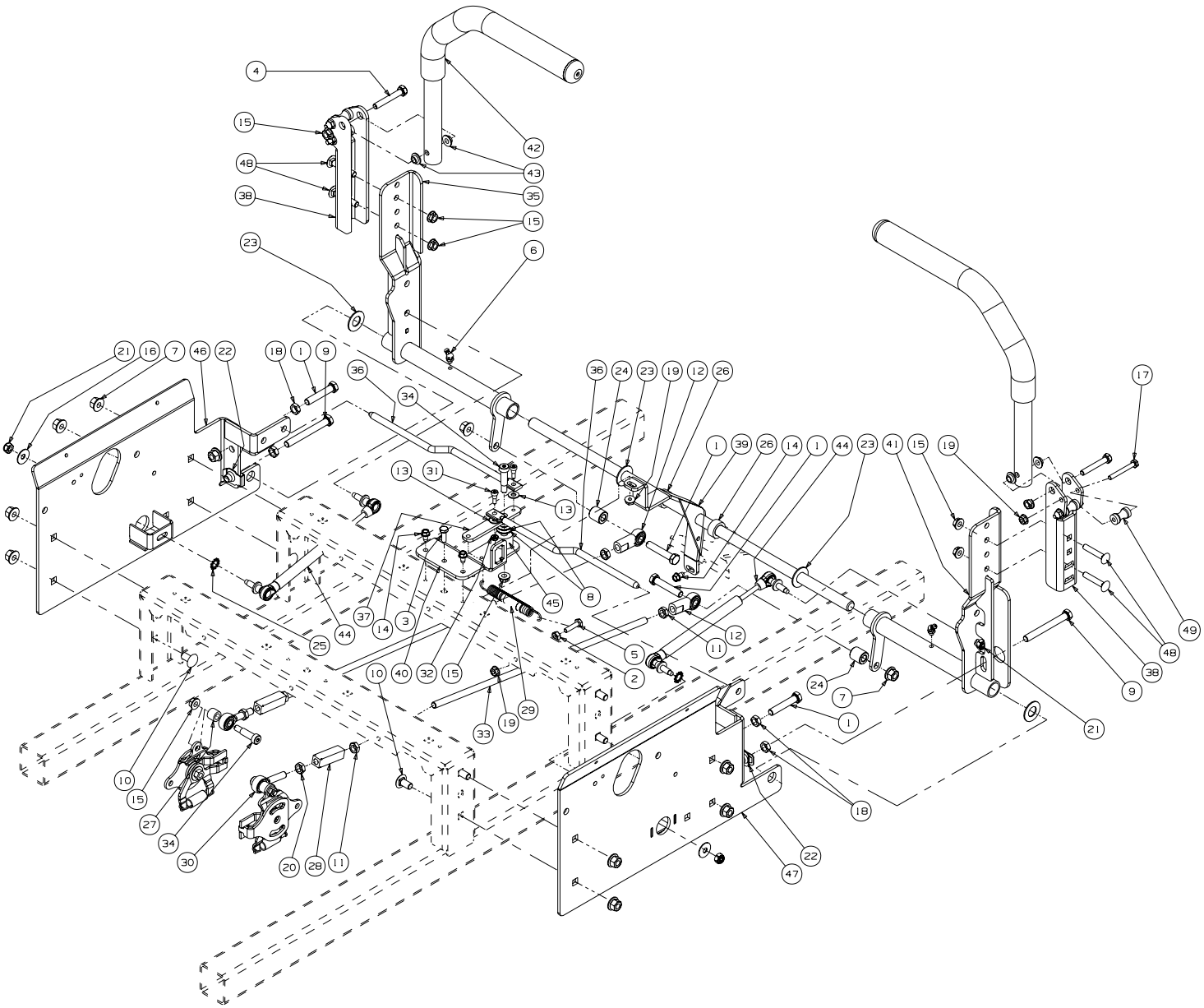

GD: 02005062-10/25/07

Control Assembly - Parts List for Figure 9

Ref. No.	Part No.	Description	Qty.	Ref. No.	Part No.	Description	Qty.
1	00002528	Hex Cap Screw, 3/8-16 x 2.00	4	27	01007312	Spacer, .625 OD x .385 ID x 1/2	2
2	00012186	Hex Nut, 1/4-20	1	28	01007734	Turnbuckle	2
3	00013131	Hex Cap Screw, 1/4-20, .75	1	29	732-0470A	Extension Spring, .53 OD x 4.75	1
4	00013198	Hex Cap Screw, 5/16-18 x 2.00	2	30	01008367	B/Joint, 3/8-24, Left Hand Female	2
5	00013416	HHCS, 1/4-20 x 1.00	1	31	01009322	Shoulder Bolt, 1/4 x 1/4	2
6	00021958	Grease Fitting, 1/4-28, 45 degree	2	32	01009377	Nut w/ Star Washer, 10-24	2
7	00022560	Hex Nut, 3/8-16, Lock Flange	12	33	01009560	Control Rod, 3/8 x 17.312	2
8	00061053	Washer, 3/8, SS	2	34	02000069	Screw, Shoulder Control Rod	3
9	02003666	Hex Cap Screw, 3/8-16 x 3.50	2	35	02002931	Lapbar Control Assembly, LH	1
10	01000372	Carriage Bolt, 3/8-16 x .75	8		01004265	Bearing	2
11	01000450	Hex Jam Nut, 3/8-24	4	36	02002542	Brake/Control Rod	2
12	01000451	B/Joint, 3/8-24, Right Hand Female	2	37	02002543	Lapbar Control Arm	1
13	01000600	Flat Washer, 1.4 x .630 x .0515	2	38	02004044	Lapbar Pivot Bracket	2
14	01000628	Screw, TT, 1/4-20, 0.5, Hex Index Washer	3	39	02002555	Lapbar Control Shaft Assembly	1
15	01000635	Nut, Lock, HexFlange, 5/16-18	9	40	02004382	Lapbar/Brake Control Mounting Bracket	1
16	01000960	Belle Washer, .325 x .930 x .045	2	41	02002932	Lapbar Control Assembly, RH	1
17	01006898	Hex Cap Screw, 1/4-20 x 2.00	4		01004265	Bearing	2
18	01002511	Nut, 3/8-16, Jam	4	42	02004049	Lapbar Assembly includes:	2
19	01002766	Hex Flange Lock Nut, 1/4-20	6		02002662	Grip, 1.0	2
20	01002986	Nut, 3/8-24, Jam, LH Third	2	43	02003419	Bushing, .310 x .172 x .688 x .06	4
21	01003561	Nut, Hex, Center Lock, M8	4	44	02003653	Cylinder Return to Neutral	2
22	01003947	U-Nut, 3/8-16, .75	2	45	02003664	Spacer, .405 ID x 1.0 OD x .72	1
23	01004003	Flat Washer, 5/8 Nylon	4	46	02003883	Side Panel, Control, Left	1
24	01004129	Spacer, .385 ID x .75 OD x .875	2	47	02003884	Side Panel, Control, Right	1
25	01005851	External Washer, 3/8	2	48	01000956	Carriage Bolt, 5/16-18 x 1.75	4
26	01006350	Shaft Collar	2	49	02003644	Spacer, .251 ID x .38 OD x 1.13 LG	4

Wheel Assembly - Figure 10 and Parts List

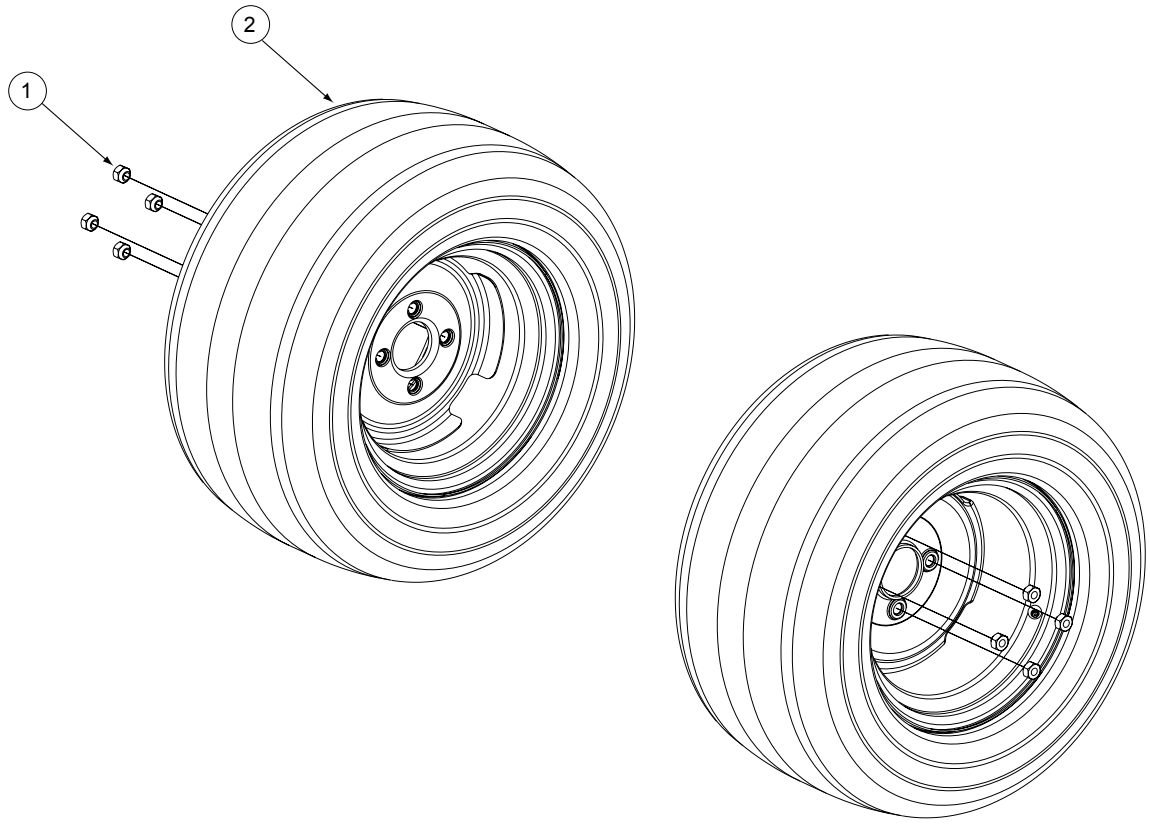

GD: 02002669-10/04/06

Ref. No.	Part No.	Description	Qty.
1	00012187	Lug Nut, 1/2-20	8
2	02002668	Wheel Assembly, 24 x 12.00-12, Beige	2
		Includes:	
	00073975	Tire, 24 x 12.00-12, Turf Master	
		Rim, 12 Dia x 8.50 width	
OPTIONAL TIRES			
	01002182	Wheel Assembly, 24 x 12.00-12, Turf Saver	
	01004473	Tire, 24 x 12.00-12, Turf Saver	

Seat/Floor Panel Assembly- Figure 11 and Parts List

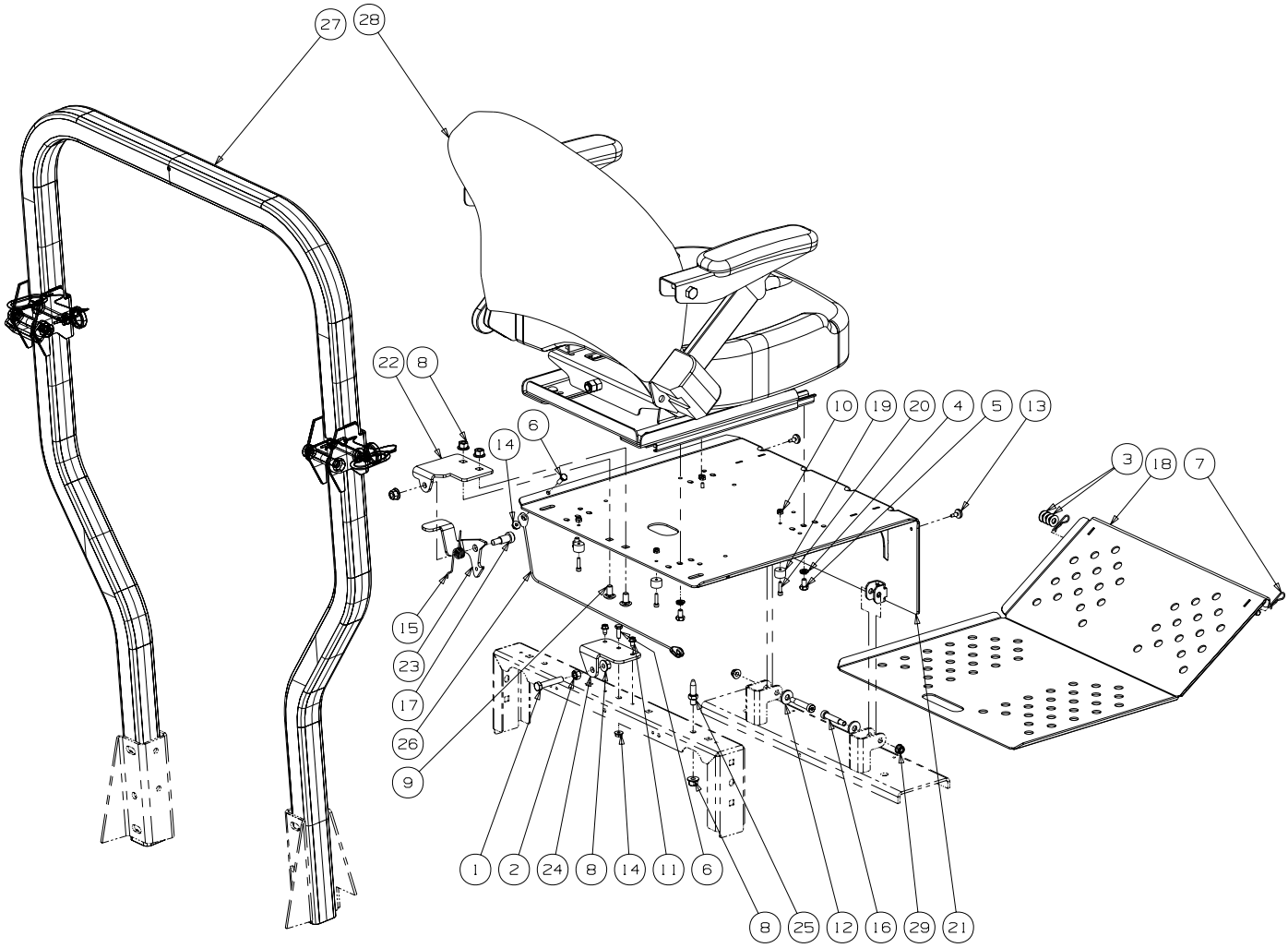

GD: 02005208-01/03/08

Ref. No.	Part No.	Description	Qty.	Ref. No.	Part No.	Description	Qty.
1	00002528	Hex Cap Screw 3/8-16 x 2.00	1	18	02002334	Floor Panel Assembly	1
2	00006131	Hex Nut, 3/8-16	1	19	02002963	Rubber Stop with Washer	4
3	00012158	Washer	AR	20	02002964	Standard Cap Screw, #10-24 x .75	4
4	00012168	Lock Washer, 5/16	4	21	02003404	Seat Plate Assembly	1
5	00012178	Hex Cap Screw, 5/16-18 x 1/2	4	22	02003730	Seat Latch Bracket	1
6	00013131	Screw, Hex, Cap, 1/4-20 x .75	2	23	02003732	Latch Lever Bracket	1
7	00021956	Hair Pin, 3/8-1/2	2	24	02003738	Latch Bracket	1
8	00022560	Flange Lock, Hex Nut, 3/8-16	5	25	02003745	Adjustable Stud	1
9	01000372	Carriage Bolt, 3/8-16 x .75 Long	2	26	02004062	Cable Support	1
10	01000523	Nut, #10-24, Nylon Lock	4	27	02005081	Foldable Rops Assembly includes:	1
11	01000628	Screw, TT, 1/4-20, 0.5, Hex Index Washer	2			Knob	2
12	01000723	Flat Washer, .406 ID, 1.0 OD, .105	2		02004324	Pin, Lock	2
13	01001170	Rubber Bumper, .62 OD x .22 Thick	2	28	02005209	Seat w/ Seat Belt & Suspension	1
14	01002766	Lock Nut, 1/4-20	2		01008364	Right Hand & Left Hand Armrest Kit	
15	01008140	Deck Lift Spring, Left Hand	1		02000767	Seat Switch Assembly	
16	01009459	Shoulder Bolt, .375 x 1.50	2	29	712-04063	Flange Lock Nut, 5/16-18	2
17	02002091	Shoulder Bolt, 1/2 x 3/4, 3/8-16	1				

37HP Kawasaki Engine Assembly - Figure 12

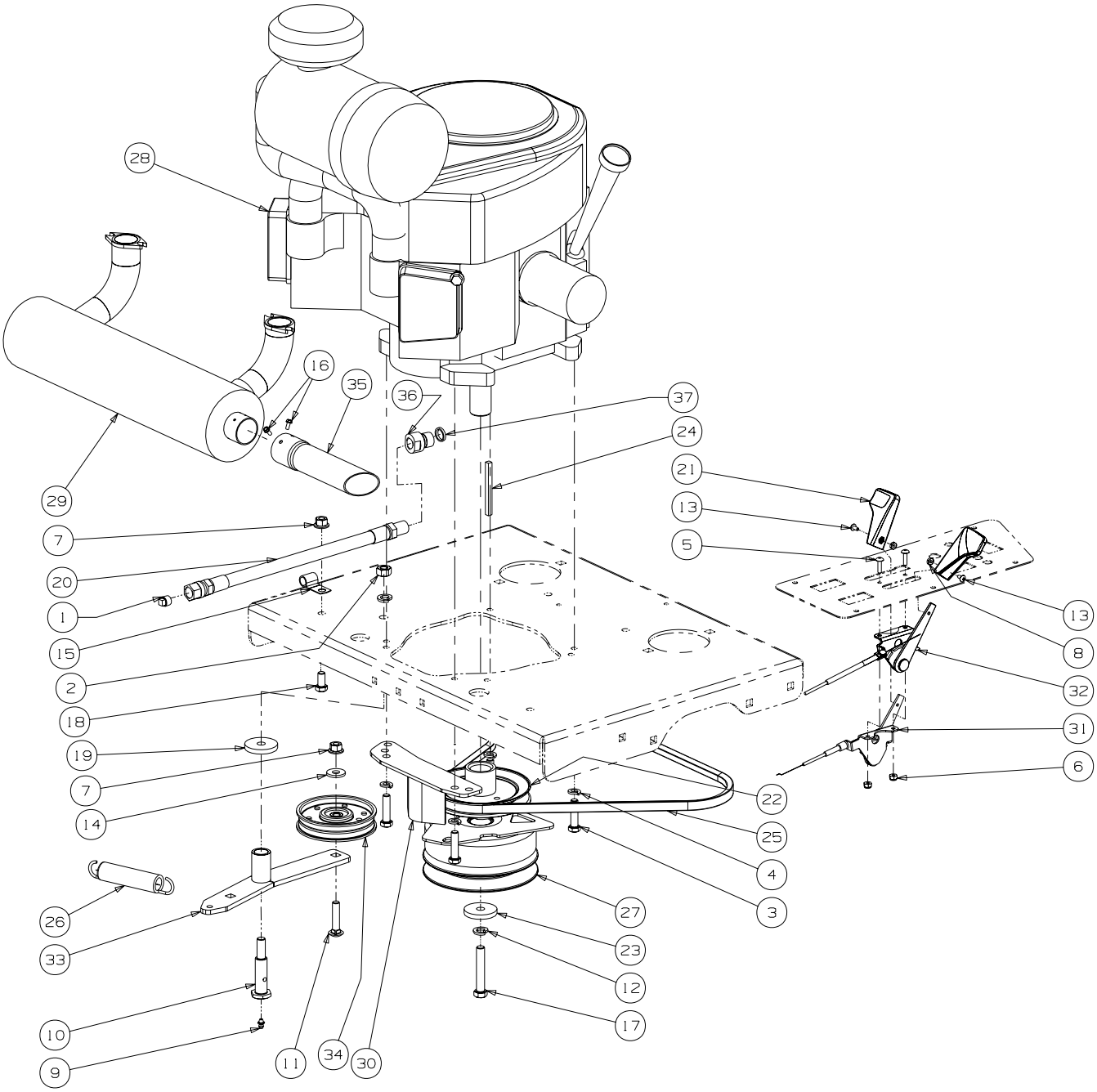

Description	Part Number
Air Filter	KM-11013-7038
Air Filter (Inner)	KM-11013-7039
Fuel Filter	KM-49019-7001
Oil Filter	KM-49065-2078
Spark Plug	KM-BPR5ES

GD: 02003537-01/14/08

37HP Kawasaki Engine Assembly - Parts List for Figure 12

Ref No	Part No.	Description	Qty.
1	00002834	Pipe Plug, 3/8 NPT	1
2	00005763	Hex Nut, 7/16-14	1
3	00010980	Hex Head Cap Screw, 3/8-16 x 1.50	4
4	00012157	Washer lock 3/8 zinc	4
5	00014602	Round Hd. Machine Screw, 10-32 x 3/4	2
6	00014608	Lock Nut, Nylon Insert, 10-32	2
7	00022560	Flange Lock, Hex Nut, 3/8-16	2
8	00060056	Nut Washer, W/Star, 8-32	2
9	00060078	Grease Fitting, 1/4-28 x 3/16	1
10	01000302	Shoulder Screw, 7/16-14	1
11	01000364	Hex Carriage Screw, 3/8-16, 1.75	1
12	01000389	Lock Washer, 7/16	2
13	01000721	Machine Screw, 8-32, .375	2
14	01000723	Flat Washer, .406 ID, 1.0 OD, .105	1
15	01000728	Clip, Heat Shield Cable	1
16	01000811	Screw, #8-32 x .375	2
17	01001395	Capscrew, 7/16-20 x 2.50	1
18	01002601	Hex Cap Screw, 3/8-16, .750	1
19	01003269	Flat Washer, 7/16 ID x 1.75 OD x .25	1
20	01003283	Oil Drain Hose	1
21	01004004	Control Throttle Knob	2
22	01005104	Pump Drive Pulley	1
23	01005314	Flat Washer, 7/16 ID x 1.75 OD x .25	1
24	01005856	Key, 1/4 x 1/4 x 3	1
25	01007015	Belt, 51.2 Lg	1
26	01009635	Extension Spring, .98 OD x 5.00	1
27	02002825	Clutch Brake, 1.125 ID	1
28	02003521	Engine, 37HP Kawasaki	1
29	02003522	Muffler, Kawasaki	1
30	02003543	Retainer Clutch Assembly	1
31	02003742	Throttle, Control Cable	1
32	02003743	Choke, Control Cable	1
33	02004075	Engine Idler Arm includes:	1
	01000308	Bearing	2
34	02005077	Flat Pulley with Flanges	1
35	02005091	Muffler Accessory Exhaust Tube	1
36	02005701	Oil Drain Adaptor	1
37	02005713	O-Ring	1

Note: Engine Oil 10W40

Electrical Assembly Kawasaki - Figure 13

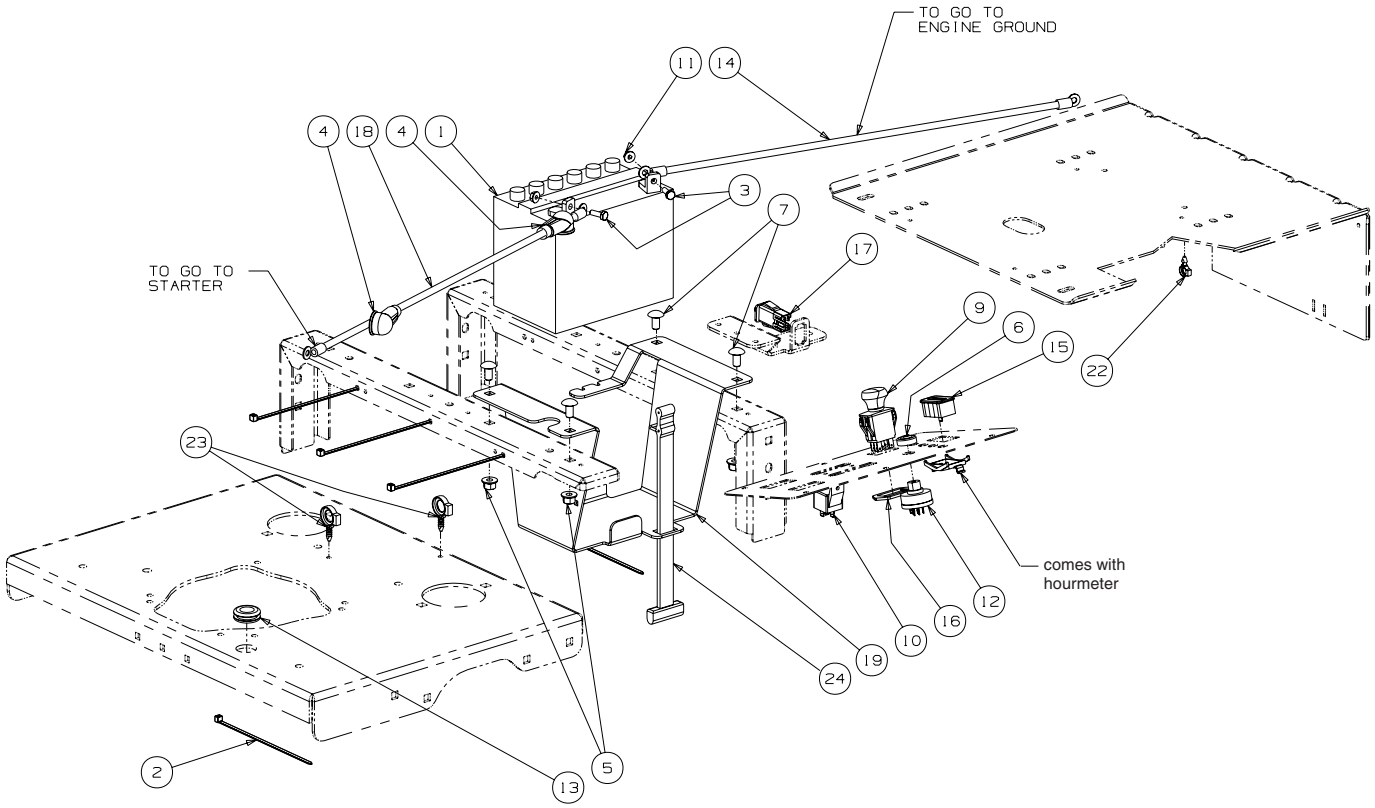

Fasten relay (01002251) with self-tapping screw (01000628) on LH control panel shown in Fig. 5.

GD: 02002937-10/25/07

Electrical Assembly Kawasaki - Parts List for Figure 13

Ref. No.	Part No.	Description	Qty.
1	00012032	Battery, 12V 225CCA 30 Min	1
2	00012470	Tie, Cable, 3/16 x .05 x 7.4"	5
3	00013131	Screw, Hex, Cap, 1/4-20 x .75	2
4	00013258	Boot, 1" OD Rubber Battery-PST, Red	2
5	00022560	Hex Nut, Flange Lock, 3/8-16	4
6	00032097	Nut, W/Cap, 5/8-32 Ignition	1
7	01000372	Carriage Bolt, 3/8-16 x .75 Long	4
8	01001811	Hourmeter, Harness (not shown)	1
9	01002111	Switch, Electric, PTO	1
10	01002251	Relay, 12V 40A	1
11	01002766	Hex Flange Lock Nut, 1/4-20	2
12	01003581	Switch, Ignition, 6 Pin includes:	1
	725-1341B	Key	1
13	01004040	Grommet, .75 ID	1
14	01004078	Cable, Battery Black, 28"	1
15	01005389	Meter, Hour includes:	1
	02004259	Clip	1
16	01009905	Bracket, PTO Switch Retainer	1
17	02000024	Switch, Safety N.O./N.C.	1
18	02002059	Cable, Battery Red, 42"	1
19	02002551	Battery Bracket	1
20	02002822	Wire Harness Adaptor	1
21	02002824	Harness Assembly (not shown)	1
22	02003038	Electrical Conduit Clip, 3/8	1
23	02003775	Electrical Conduit Clip, 5/8	2
24	723-3064	Strap, Battery	1

Lift Assembly - Figure 14

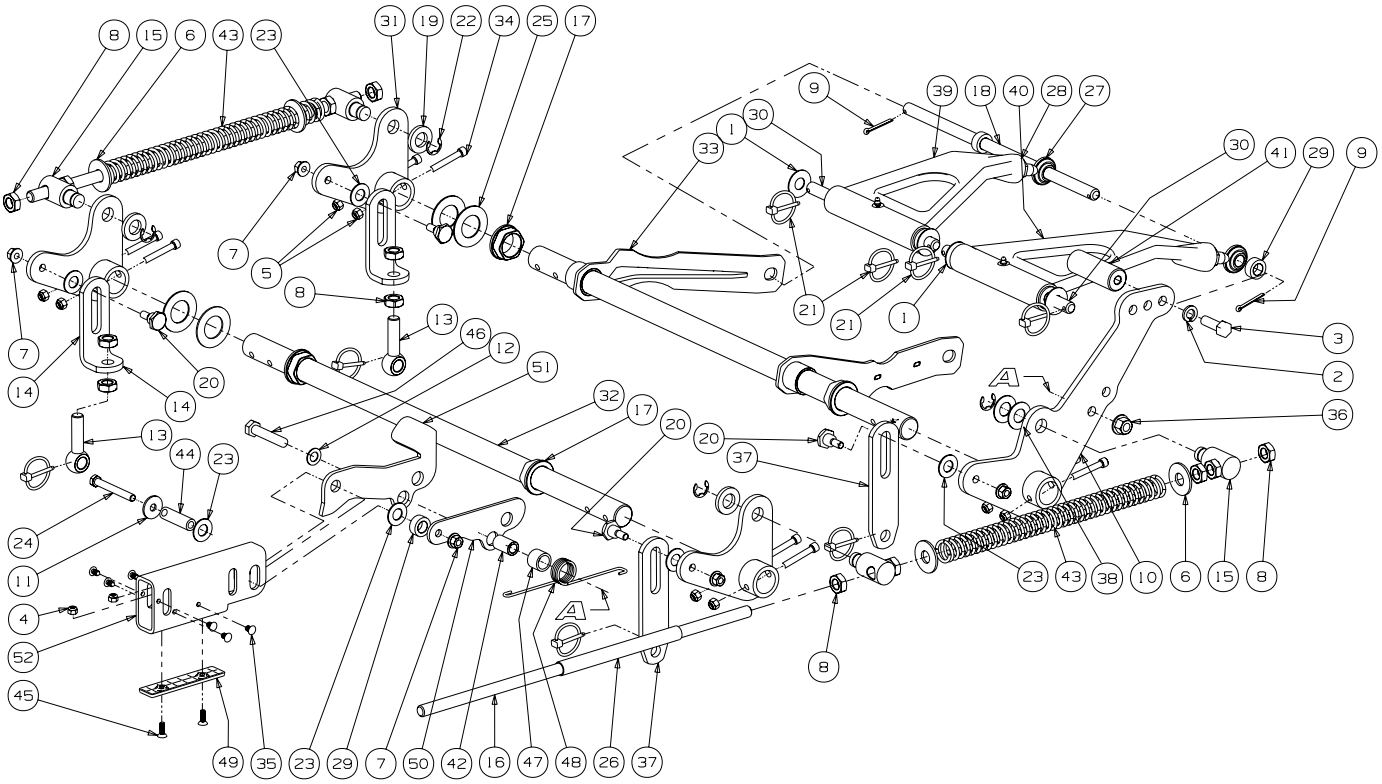

GD: 02005262-11/30/07

Lift Assembly - Parts List for Figure 14

Ref. No.	Part No.	Description	Qty.
1	00002766	Washer, 1.5 x .655 x .055	4
2	00010734	Lock Washer, 1/2	1
3	00011951	Hex Cap Screw, 1/2-13 x 1.50	1
4	00012152	Lock Nut w/Nylon Insert	2
5	00012165	Nut, 5/16-18, Nylock	8
6	00013432	Flat Washer, 5/8	4
7	00022560	Hex Nut, Flange Lock, 3/8-16	5
8	00035632	Jam Nut, 5/8-11	14
9	00060018	Cotter Pin, 3/16 x 1-1	2
10	02005137	Deck Lift Foot Pedal Weldment	1
11	01000872	Flat Washer, 1.25 x .411 x .100	1
12	01000873	Flat Washer, .536 ID x .930 OD x .05	1
13	01001744	Eye Bolt, 5/8ID	2
14	01001746	Eye Bolt, 5/8 ID	2
15	01001855	Ferule Lift	4
16	01001857	Lift Connector Rod	2
17	01001930	Hex Flange Bearing, 1.25 ID	4
18	01002586	Front Lift Link, Rod Mount	1
19	01003123	Spacer, .812 ID x .268 Lg.	3
20	01003535	Shoulder Screw, 0.625 OD x .437 Lg.	4
21	01003993	Linch Pin, 3/16 Dia.	8
22	01003994	E Clip, 3/4 Dia.	4
23	01004003	Nylon Flat Washer, 5/8	6
24	01004127	HHCS, 3/8-16, 3.00	1
25	01006408	Flat Washer, 1.25 ID	4
26	01006823	Hose, 5/8 ID 13/16 OD, 8" LG	2
27	01007487	Rod End, Male	2
28	01007526	Jam Nut, 5/8-18	2
29	01007527	Spacer, .630 ID x 1.06 OD x .440	3
30	01007544	Deck Lift Link Rod	2
31	01007680	Bellecrank Weldment Assembly	3
32	01007681	Deck Lift Shaft	2
33	01007782	Front Frame Strut Assembly	2
34	01007962	Socket Head CapScrew, 5/16-18 x 2	8
35	01008801	Rivet, 1/4 x 5/8	6
36	01010119	Nut, 1/2-13, FlangeLock	1
37	02000561	Deck Link	2
38	736_0188	Washer, .76 x 1.49 x .06	2
39	02002708	Bearing Lift Brace Assembly, Left Hand	1
	00060078	Grease Fittting	1
	02002384	Bearing	2
40	02002709	Bearing Lift Brace Assembly, Right Hand	1
	00060078	Grease Fitting	1
	02002384	Bearing	2
41	02002596	Deck Lift Foot Pedal	1
42	02002655	Spacer, .51 ID x .75 OD x 1.240	1
43	02002959	Lift Compression Spring	2
44	02003043	Spacer, .375 ID x .625 OD x 1.53	1
45	02003505	Flat Head CapScrew, 1/4-20 x .75	2
46	02005518	Socket Head CapScrew, 1/2-13 x 2.50	1
47	02003586	Spacer, .76 ID x 1.0 OD x .75	1
48	02003588	Torsion Spring, .120 Wire x 1.32 OD	1
49	02003749	Lift Wear Plate	1
50	02005048	Yoke Plate	1
51	02005050	Lift Link Bracket	1
52	02005103	Lift Tube, 3.0 x 1.5, 1" Height	1

FXT00V 37HP Cylinder/Crankcase - Figure 15 and Parts List

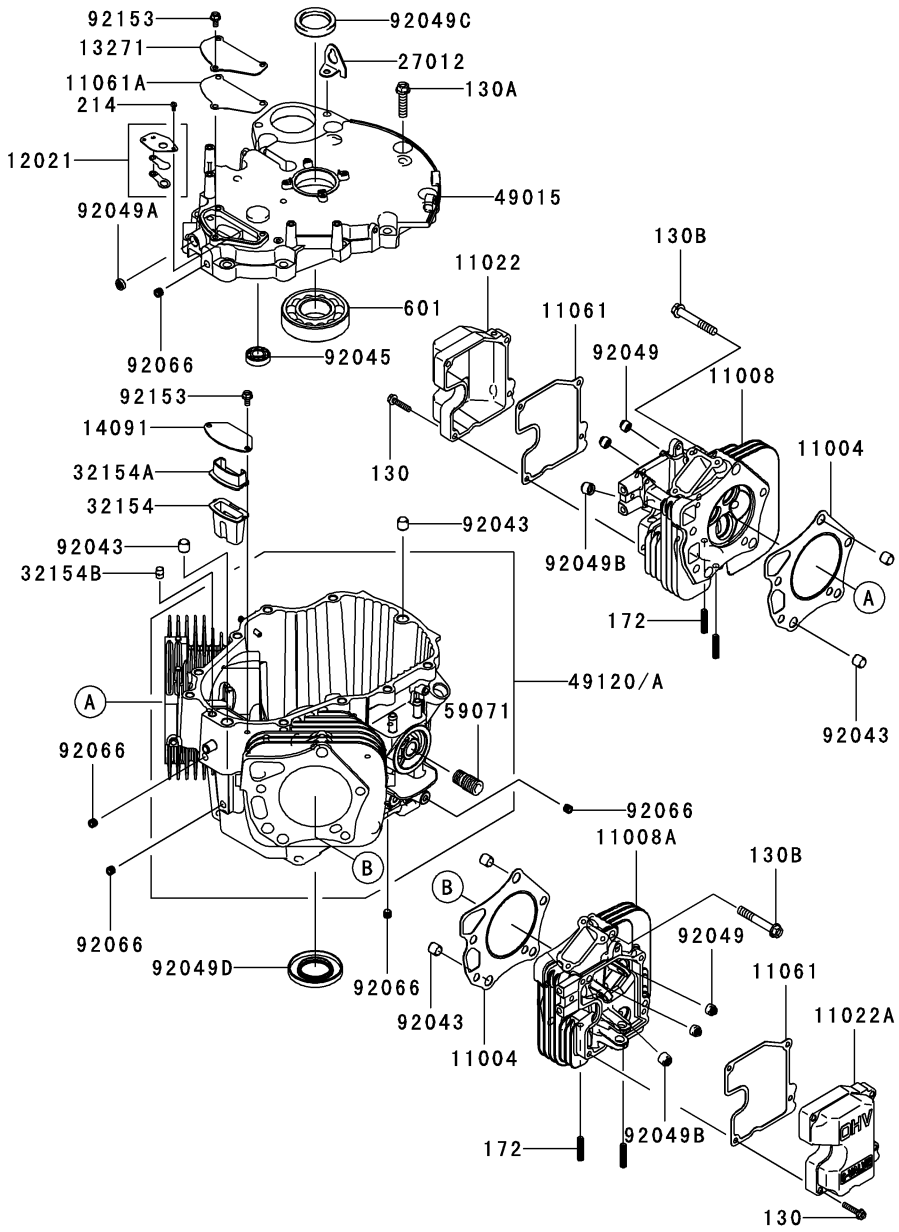

Ref. No.	Part No.	Description	Qty.	Ref. No.	Part No.	Description	Qty.
11004	KM-11004-7023	Gasket-Head	2	59071	KM-59071-2079	Joint	1
11008	KM-11008-7034	Head-Comp-Cylinder	1	92043	KM-92043-1266	Pin	6
11008A	KM-11008-7035	Head-Comp-Cylinder	1	92045	KM-92045-7002	Bearing-Ball, 15x32x9	1
11022	KM-11022-7012	Case-Rocker	1	92049	KM-92049-7001	Seal-Oil,RVC2 6x11x10.2	4
11022A	KM-11022-7013	Case Rocker	1	92049A	KM-92049-7005	Seal, Oil,SO 8x14x5 HS	1
11061	KM-11061-7055	Gasket, Case Rocker	2	92049B	KM-92049-7020	Seal-Oil, 7x15x13	2
11061A	KM-11061-7065	Gasket, Breather-Cover	1	92049C	KM-92049-7024	Seal-Oil,SD 40x54x9 R HS	1
12021	KM-12021-7003	Valve-Assy-Reed,Breather	1	92049D	KM-92049-7025	Seal-Oil,SD 40x72x8 L VS	1
13271	KM-13271-7037	Plate, Breather-Cover	1	92066	KM-92066-7002	Plug	5
14091	KM-14091-7052	Cover, Breather	1	92153	KM-92153-7043	Bolt, 6x12	5
27012	KM-27012-7004	Hook	1	130	KM-130AA0630	Bolt-Flanged, 6x30	8
32154	KM-32154-7014	Pipe,Breather	1	130A	KM-130CA1040	Bolt-Flanged, 10x40	11
32154A	KM-32154-7015	Pipe,Breather	1	130B	KM-130CA1065	Bolt-Flanged, 10x65	10
32154B	KM-32154-7019	Pipe	1	172	KM-172BA0818	Bolt-Stud, 8x18	4
49015	KM-49015-7060	Cover-Crankcase	1	214	KM-214AA0408	Screw-Pan+-,4x8	2
49120	KM-49120-6169	Crankcase-Comp		601	KM-601A6308	Bearing-Ball	1
49120A	KM-49120-6174	Crankcase-Comp	1				

FXT00V 37HP Piston/Crankshaft - Figure 16 and Parts List

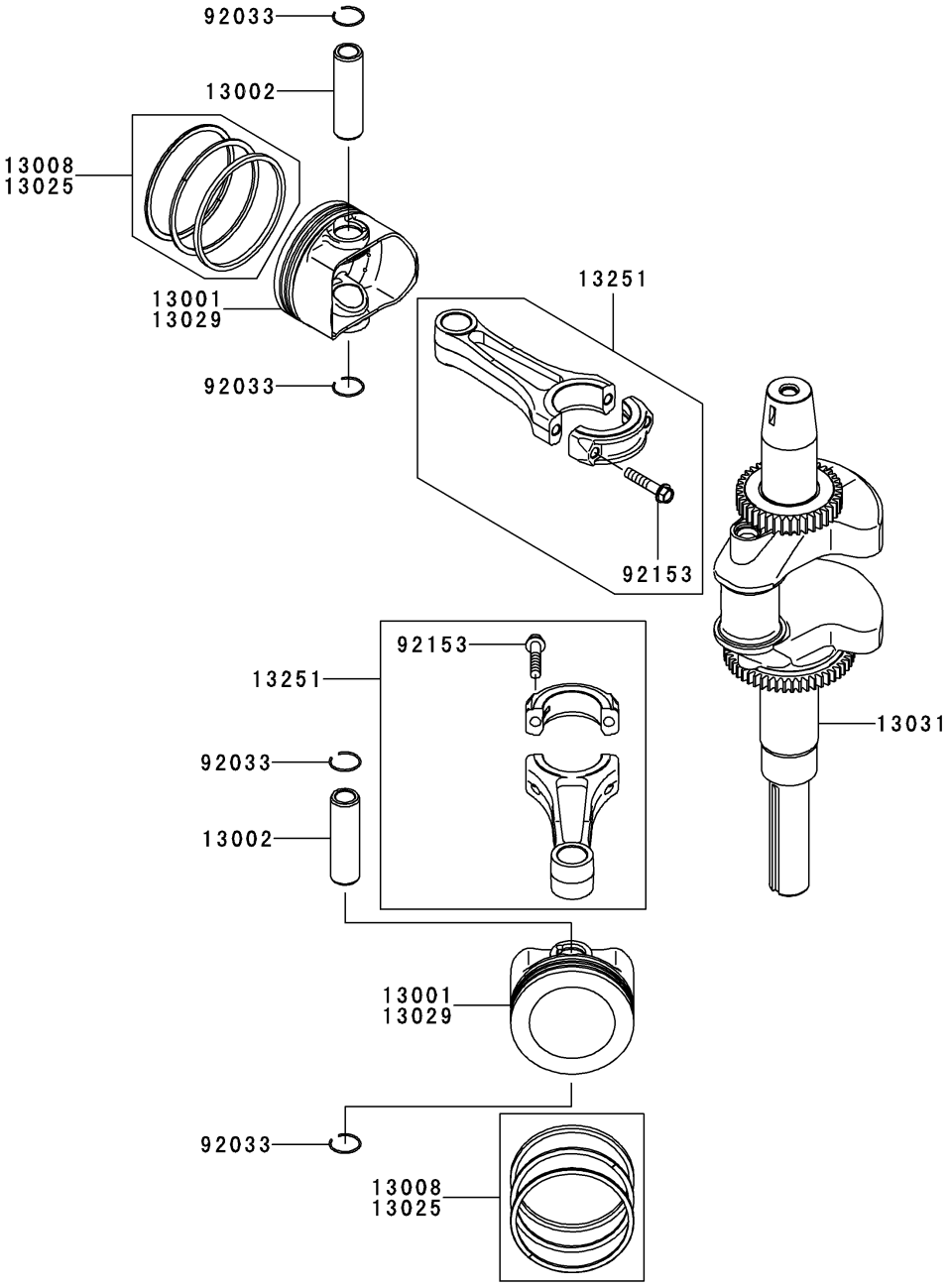

Ref. No.	Part No.	Description	Qty.
13001	KM-13001-7021	Piston-Engine	2
13002	KM-13002-7004	Pin-Piston	2
13008	KM-13008-7004	Ring-Set-Piston	2
13025	KM-13025-7008	Ring -Set-Piston L,0.5	AR
13029	KM-13029-7009	Piston-Engine, L,0.5	AR
13031	KM-13031-7074	Crankshaft-Comp	1
13251	KM-13251-7018	Rod-Assy-Connecting	2
92033	KM-92033-2176	Ring-Snap	4
92153	KM-92153-2054	Bolt,7x35.2	4

FXT00V 37HP Valve/Camshaft - Figure 17 and Parts List

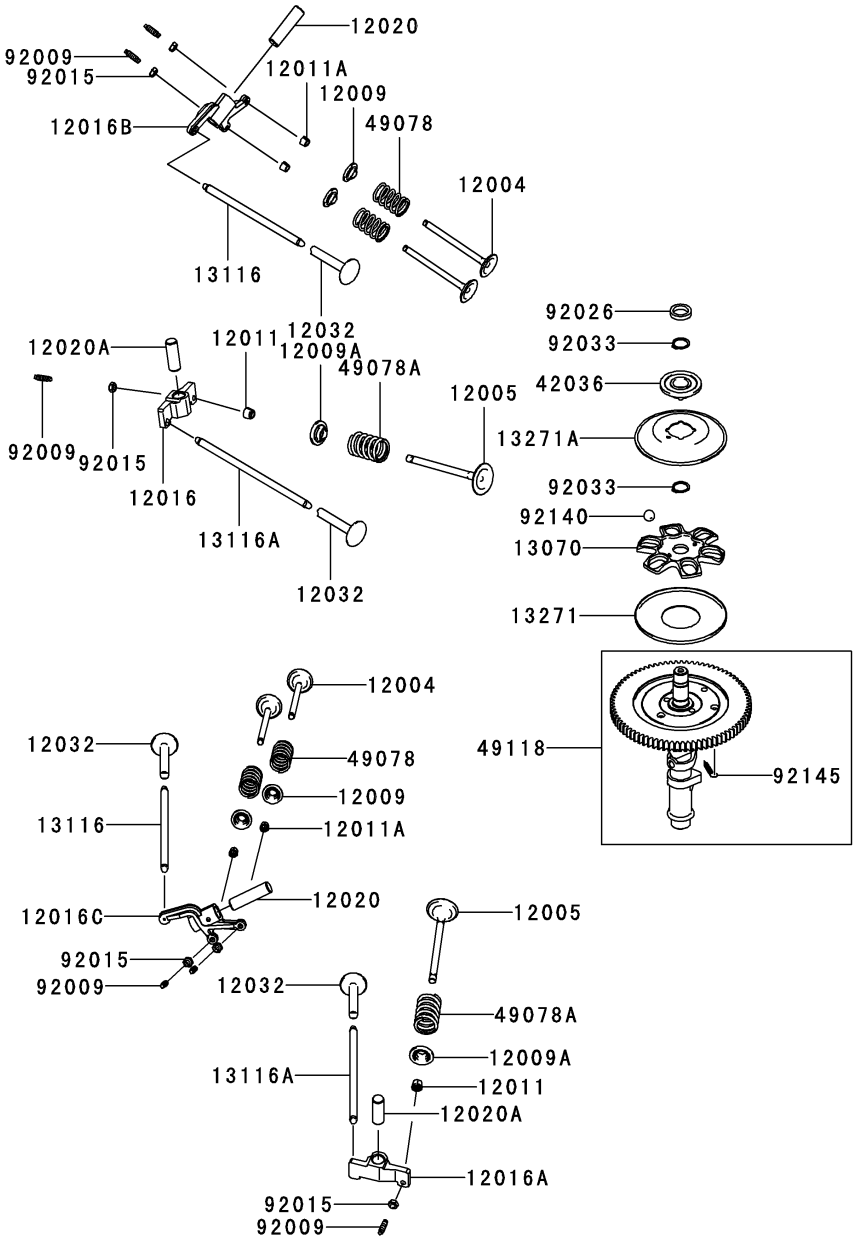

Ref. No.	Part No.	Description	Qty.	Ref. No.	Part No.	Description	Qty.
12004	KM-12004-7006	Vavle-Intake	4	13116	KM-13116-2054	Rod-Push	2
12005	KM-12005-7007	Valve-Exhaust	2	13116A	KM-13116-7005	Rod-Push	2
12009	KM-12009-7001	Retainer-Vavle Spring	4	13271	KM-13271-7007	Plate	1
12009A	KM-12009-7002	Retainer-Vavle Spring	2	13271A	KM-13271-7021	Plate,Governor	1
12011	KM-12011-2052	Collet	4	42036	KM-42036-7010	Sleeve	1
12011A	KM-12011-2056	Collet	8	49078	KM-49078-7002	Spring-Engine Valve, IN	4
12016	KM-12016-7011	Arm-Rocker, #1, EX	1	49078A	KM-49078-7004	Spring-Engine Valve, EX	2
12016A	KM-12016-7013	Arm-Rocker, #2, EX	1	49118	KM-49118-7018	Camshaft-Comp	1
12016B	KM-12016-7014	Arm-Rocker, #1, IN	1	92009	KM-92009-1109	Screw	6
12016C	KM-12016-7015	Arm-Rocker, #2, IN	1	92015	KM-92015-1137	Nut	6
12020	KM-12020-7001	Shaft-Rocker,IN	2	92026	KM-92026-7019	Spacer	1
12020A	KM-12020-7002	Shaft-Rocker,EX	2	92033	KM-92033-7001	Ring-Snap	2
12032	KM-12032-7002	Tappet	4	92140	KM-92140-7005	Ball	6
13070	KM-13070-7004	Guide	1	92145	KM-92145-7001	Spring	1

FXT00V 37HP Lubrication-Equipment - Figure 18 and Parts List

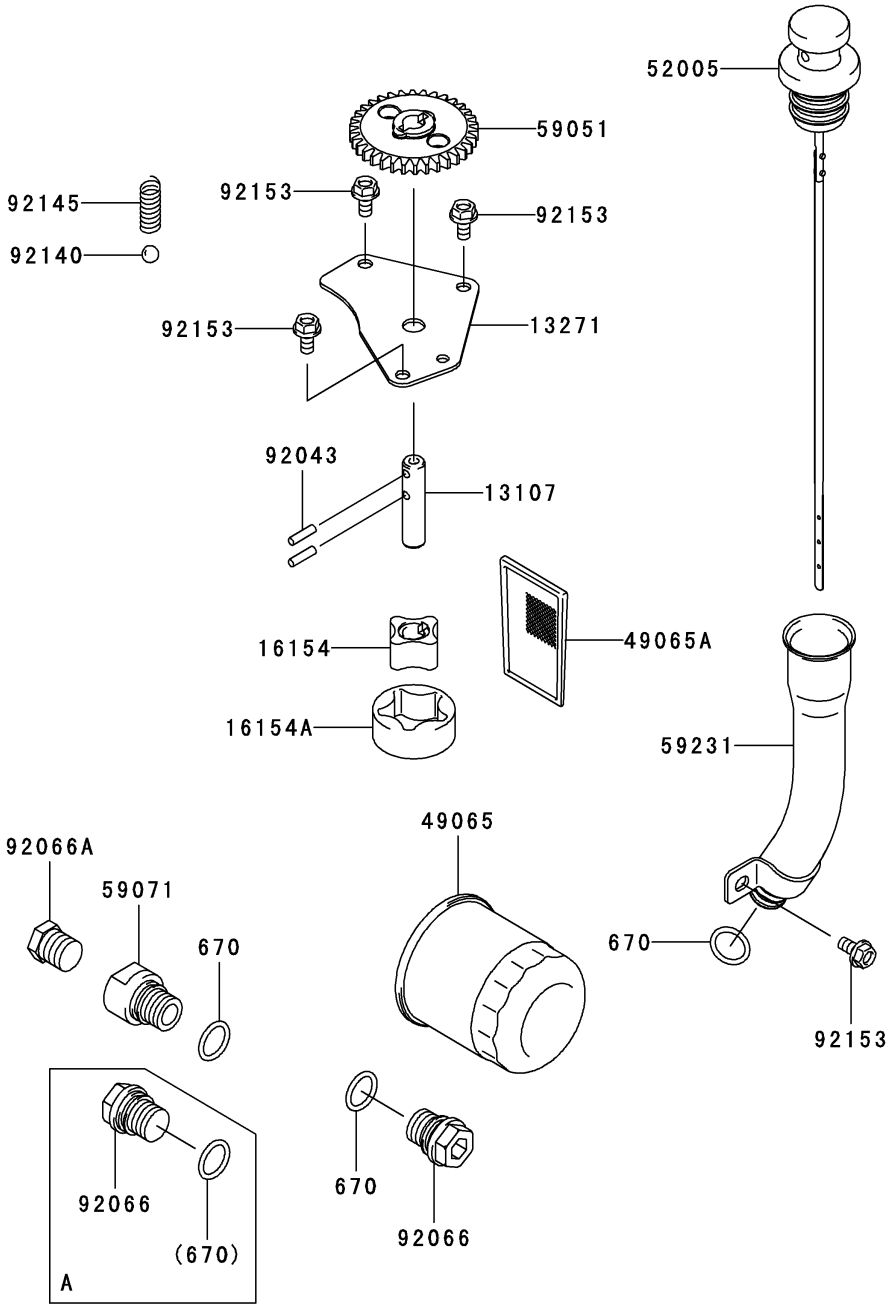

Ref. No.	Part No.	Description	Qty.	Ref. No.	Part No.	Description	Qty.
13107	KM-13107-7009	Shaft	1	59231	KM-59231-7012	Filler	1
13271	KM-13271-7034	Plate,Rotor-Pump	1	92043	KM-92043-7003	Pin	2
16154	KM-16154-7007	Rotor-Pump,In	1	92066	KM-92066-7003	Plug	1
16154A	KM-16154-7008	Rotor-Pump,Out	1	92066A	KM-92066-7006	Plug	1
49065	KM-49065-2078	Filter Oil	1	92140	KM-92140-7003	Ball	1
49065A	KM-49065-7004	Filter Oil	1	92145	KM-92145-7046	Spring	1
52005	KM-52005-7023	Gauge	1	92153	KM-92153-7043	Bolt, 6x12	4
59051	KM-59051-7026	Gear-Spur,Oil-Pump	1	670	KM-670D2016	O-Ring, 16MM	3
59071	KM-59071-7004	Joint	1				

FXT00V 37HP Cooling-Equipment - Figure 19 and Parts List

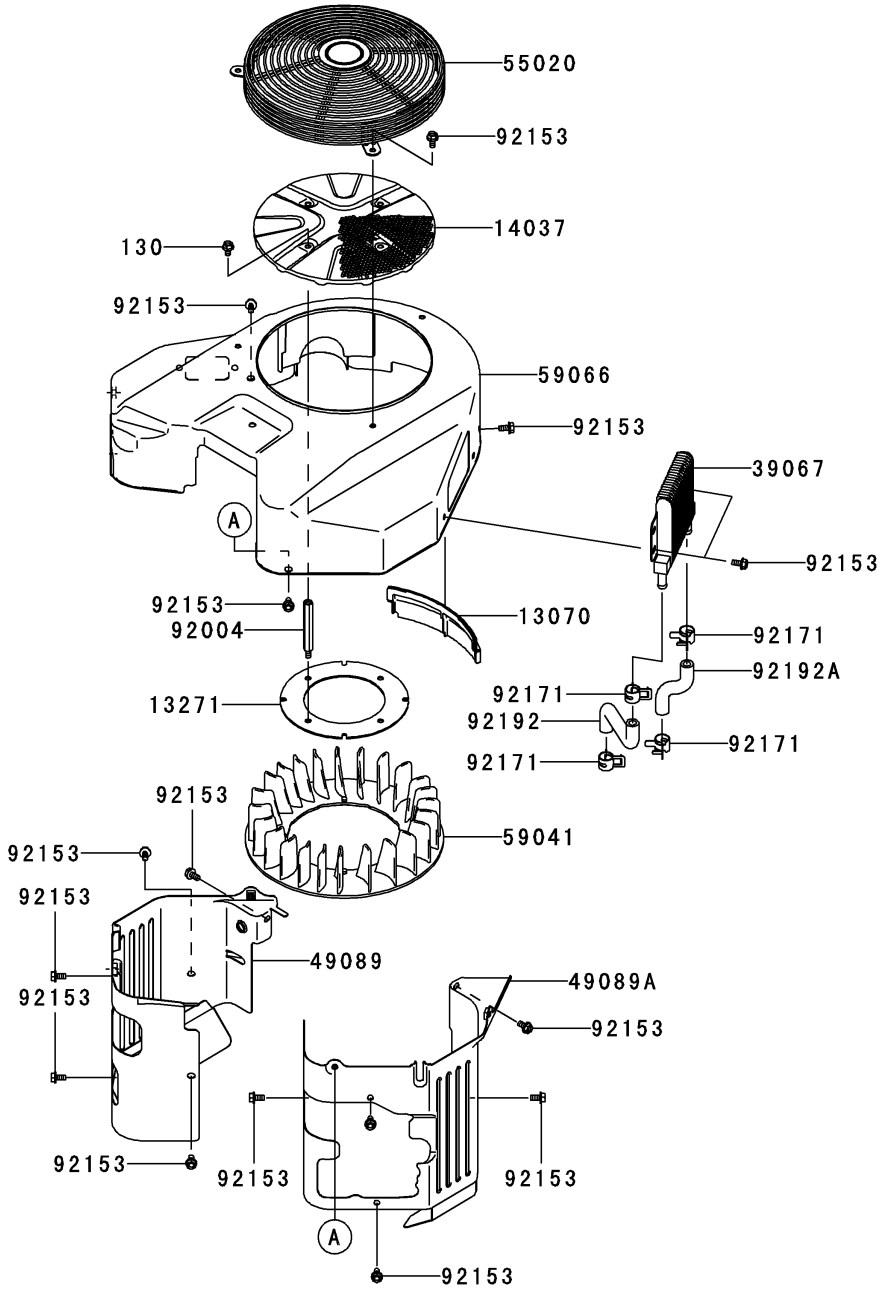

Ref. No.	Part No.	Description	Qty.	Ref. No.	Part No.	Description	Qty.
13070	KM-13070-7013	Guide	1	59066	KM-59066-7040-753	Housing-Fan	1
13271	KM-13271-7035	PLate,Fan	1	92004	KM-92004-7021	Stud, Screen	4
14037	KM-14037-7029-9H	Screen	1	92153	KM-92153-7043	Bolt, 6x12	18
39067	KM-39067-7007	Cooler-Oil	1	92171	KM-92171-7015	Clamp	4
49089	KM-49089-7062-753	Shroud-Engine	1	92192	KM-92192-7078	Tube	1
49089A	KM-49089-7063-753	Shroud-Engine	1	92192A	KM-92192-7079	Tube	1
55020	KM-55020-7010	Guard	1	130	KM-130AA0610	Bolt-Flanged, 6x10	4
59041	KM-59041-7013	Fan	1				

FXT00V 37HP Electric-Equipment - Figure 20 and Parts List

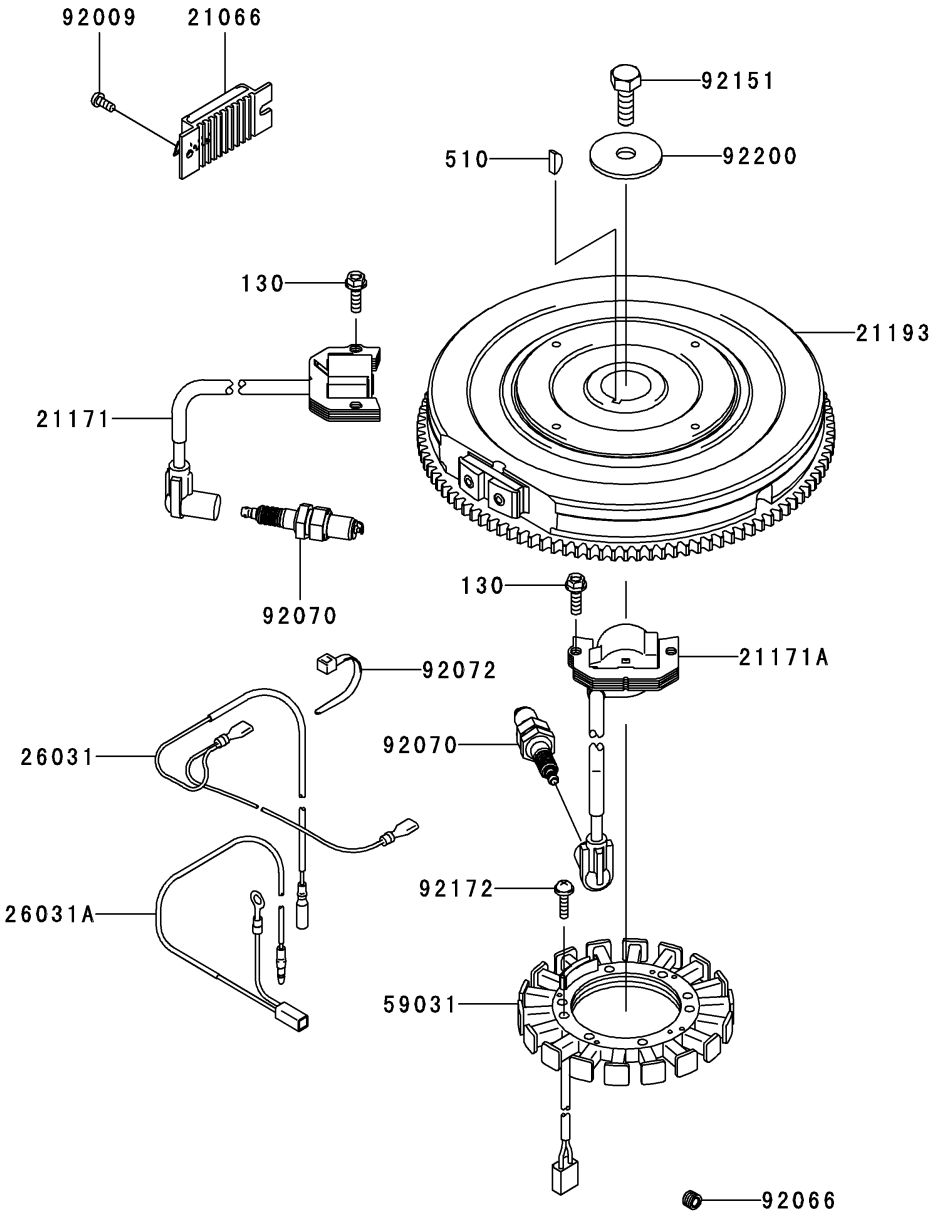

Ref. No.	Part No.	Description	Qty.	Ref. No.	Part No.	Description	Qty.
21066	KM-21066-7011	Regulator-Voltage	1	92066	KM-92066-7002	Plug	1
21171	KM-21171-7028	Coil-Assy-Ignition	1	92070	KM-92070-2088	Plug-Spark,BPR5ES,Solid	2
21171A	KM-21171-7029	Coil-Assy-Ignition	1	92072	KM-92072-7003	Band	3
21193	KM-21193-7034	Flywheel-Assy	1	92151	KM-92151-2097	Bolt,12x30	1
26031	KM-26031-7033	Harness	1	92172	KM-92172-7018	Screw, 5x20	4
26031A	KM-26031-7034	Harness	1	92200	KM-92200-7040	Washer, 12.2x46x3	1
59031	KM-59031-7009	Coil-Charging	1	130	KM-130AA0620	Bolt-Flanged, 6x20	4
92009	KM-92009-2308	Screw	2	510	KM-510A5100	Key-Woodruff	1

FXT00V 37HP Control-Equipment - Figure 21 and Parts List

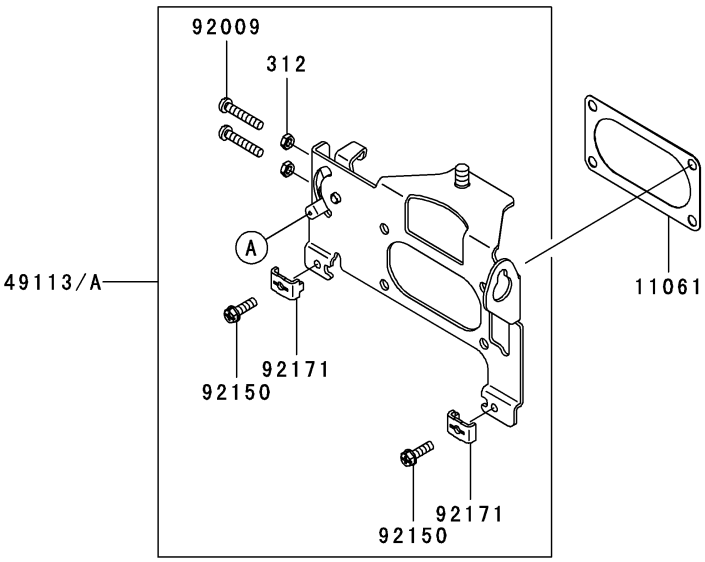

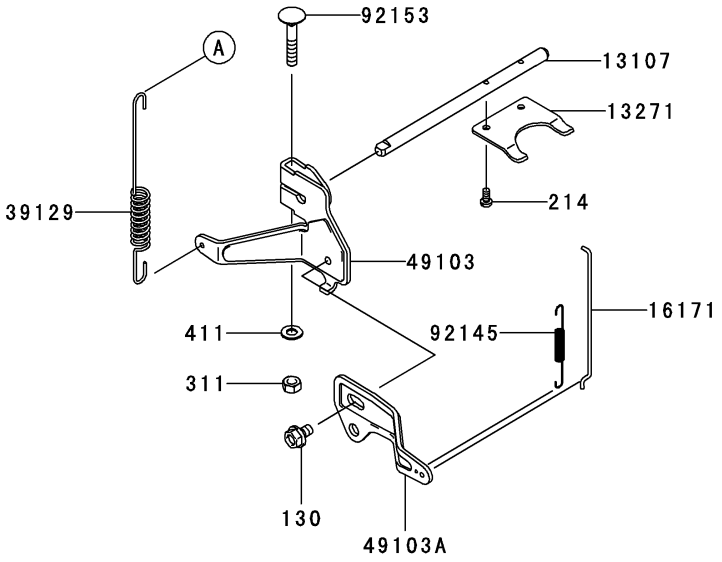

Ref. No.	Part No.	Description	Qty.	Ref. No.	Part No.	Description	Qty.
11061	KM-11061-7056	Gasket,Pipe-Intake	1	92145	KM-92145-7050	Spring	1
13107	KM-13107-7040	Shaft	1	92150	KM-92150-2182	Bolt,5x18	2
13271	KM-13271-7038	Plate	1	92153	KM-92153-7033	Bolt,6x35	1
16171	KM-16171-7018	Link	1	92171	KM-92171-7018	Clamp	2
39129	KM-39129-7017	Spring-Governor	1	130	KM-130BA0610	Bolt-Flanged, 6x10	1
49103	KM-49103-7009	Arm-Governor	1	214	KM-214AA0408	Screw-pan	2
49103A	KM-49103-7010	Arm-Governor	1	311	KM-311B0600	Nut-Hex, 6MM	1
49113	KM-49113-7042	Panel-Comp-Control		312	KM-312B0500	Nut-Hex, 5MM	2
49113A	KM-49113-7048	Panel-Comp-Control	1	411	KM-411B0600	Washer-Plain, 6MM	1
92009	KM-92009-2381	Screw,5x30	2				

FXT00V 37HP Carburetor - Figure 22 and Parts List

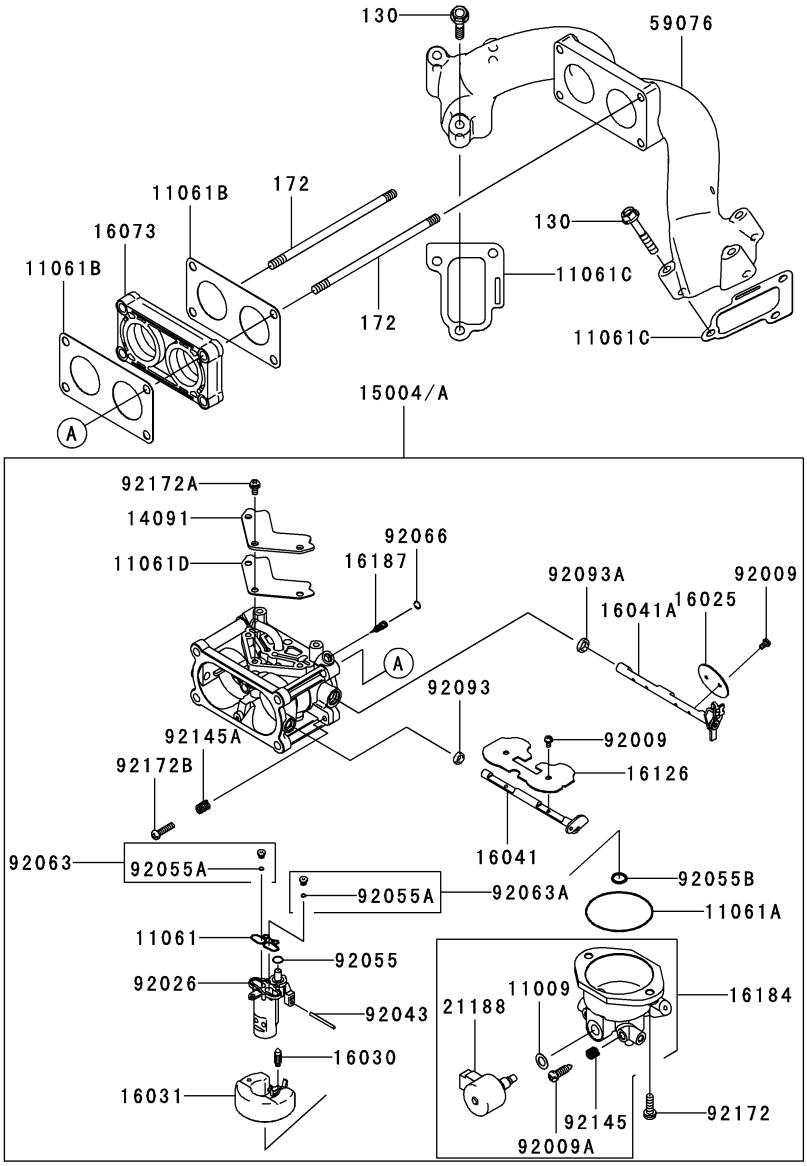

Ref. No.	Part No.	Description	Qty.	Ref. No.	Part No.	Description	Qty.
11009	KM-11009-2056	Gasket	1	92009	KM-92009-7003	Screw	6
11061	KM-11061-7037	Gasket	1	92009A	KM-92009-7006	Screw, Drain	1
11061A	KM-11061-7038	Gasket	1	92026	KM-92026-7022	Spacer	1
11061B	KM-11061-7057	Gasket, Insulator	2	92043	KM-92043-7014	Pin	1
11061C	KM-11061-7062	Gasket, Manifoldr	2	92055	KM-92055-7012	Ring-O	1
11061D	KM-11061-7067	Gasket	1	92055A	KM-92055-7013	Ring-O	2
14091	KM-14091-7059	Cover	1	92055B	KM-92055-7016	Ring-O	1
15004	KM-15004-7003	Carburetor-Assy		92063	KM-92063-7099	Jet-Main,#134	1
15004A	KM-15004-7037	Carburetor-Assy	1	92063A	KM-92063-7100	Jet-Main, #140	1
16025	KM-16025-7012	Valve-Throttle	2	92066	KM-92066-7009	Plug, Expansion	2
16030	KM-16030-7004	Valve-Float	1	92093	KM-92093-7001	Seal, D=5.9	1
16031	KM-16031-7003	Float	1	92093A	KM-92093-7002	Seal, D=6.9	1
16041	KM-16041-7035	Shaft-Carburetor, Chock	1	92145	KM-92145-7011	Spring	1
16041A	KM-16041-7036	Shaft-Carburetor, Throttle	1	92145A	KM-92145-7039	Spring	1
16073	KM-16073-7010	Insulator	1	92172	KM-92172-7005	Screw	2
16126	KM-16126-7019	Valve, Chock	1	92172A	KM-92172-7006	Screw	3
16184	KM-16184-7021	Chamber-Assy-Float	1	92172B	KM-92172-7031	Screw, Throttle Adjust	1
16187	KM-16187-7005	Needle-Jet	2	130	KM-130AA0635	Bolt-Flanged, 6x35	6
21188	KM-21188-7003	Solenoid	1	172	KM-172BA06120	Bolt-Stud, 6x120	2
59076	KM-59076-7010	Manifold-Intake	1				

FXT00V 37HP Air-Filter/Muffler - Figure 23 and Parts List

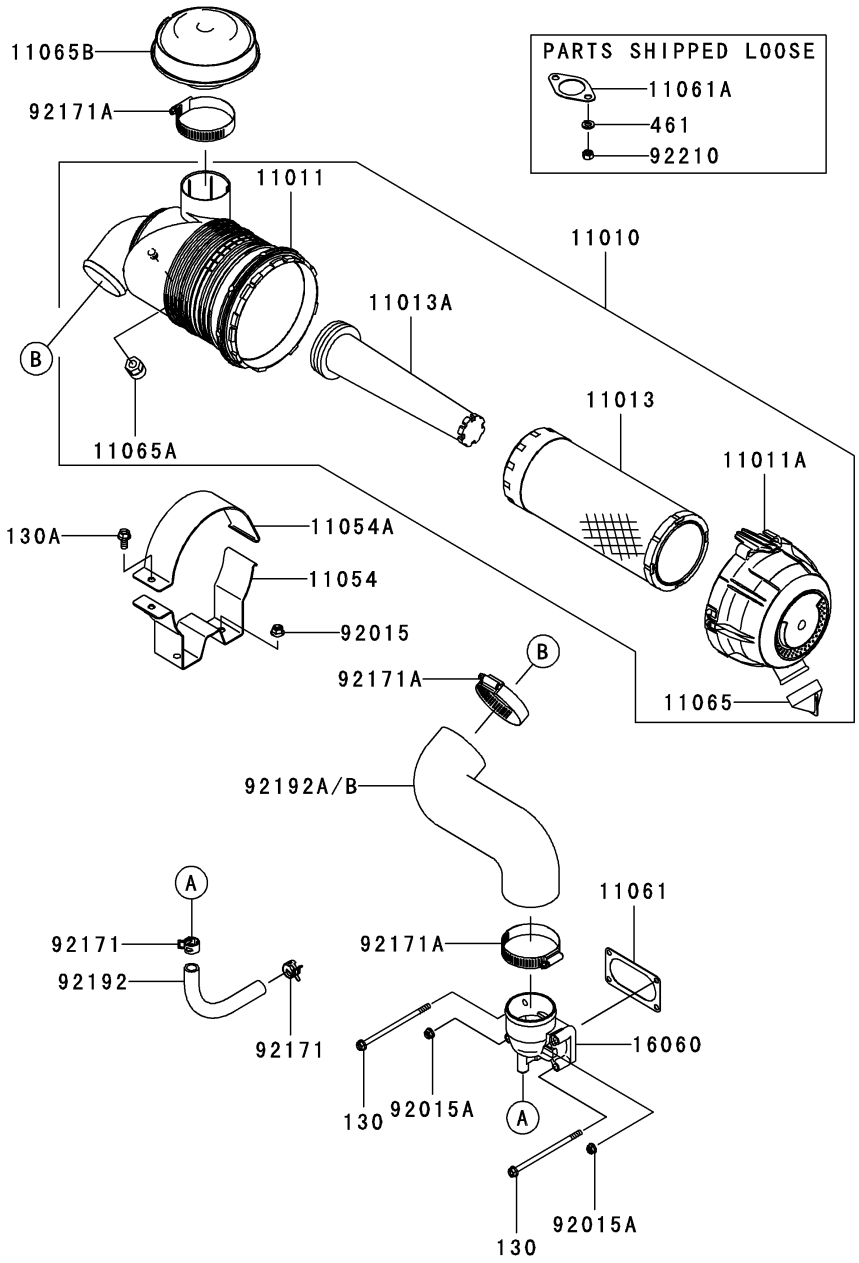

Ref. No.	Part No.	Description	Qty.	Ref. No.	Part No.	Description	Qty.
11010	KM-11010-7020	Filter-Assy-Air	1	16060	KM-16060-6006	Pipe-Intake	1
11011	KM-11011-7047	Case-Air Filter	1	92015	KM-92015-1143	Nut	2
11011A	KM-11011-7048	Case-Air Filter	1	92015A	KM-92015-1193	Nut	2
11013	KM-11013-7038	Element-Air Filter	1	92171	KM-92171-7013	Clamp	2
11013A	KM-11013-7039	Element-Air Filter	1	92171A	KM-92171-7023	Clamp. Air-Filter	3
11054	KM-11054-7012-9X	Bracket	1	92192	KM-92192-7075	Tube	1
11054A	KM-11054-7013-9X	Bracket	1	92192A	KM-92192-7076	Tube	
11061	KM-11061-7056	Gasket, Pipe-Intake	1	92192B	KM-92192-7096	Tube	1
11061A	KM-11061-7061	Gasket, Muffler	2	92210	KM-92210-7027	Nut, M8	4
11065	KM-11065-7008	Cap	1	130	KM-130AA06120	Bolt, Flanged, 6x120	2
11065A	KM-11065-7009	Cap	1	130A	KM-130AA0816	Bolt, Flanged, 8x16	1
11065B	KM-11065-7017	Cap	1	461	KM-461F0800	Washer-Spring, 8MM	4

FXT00V 37HP Fuel-Tank/Fuel-Valve - Figure 24 and Parts List

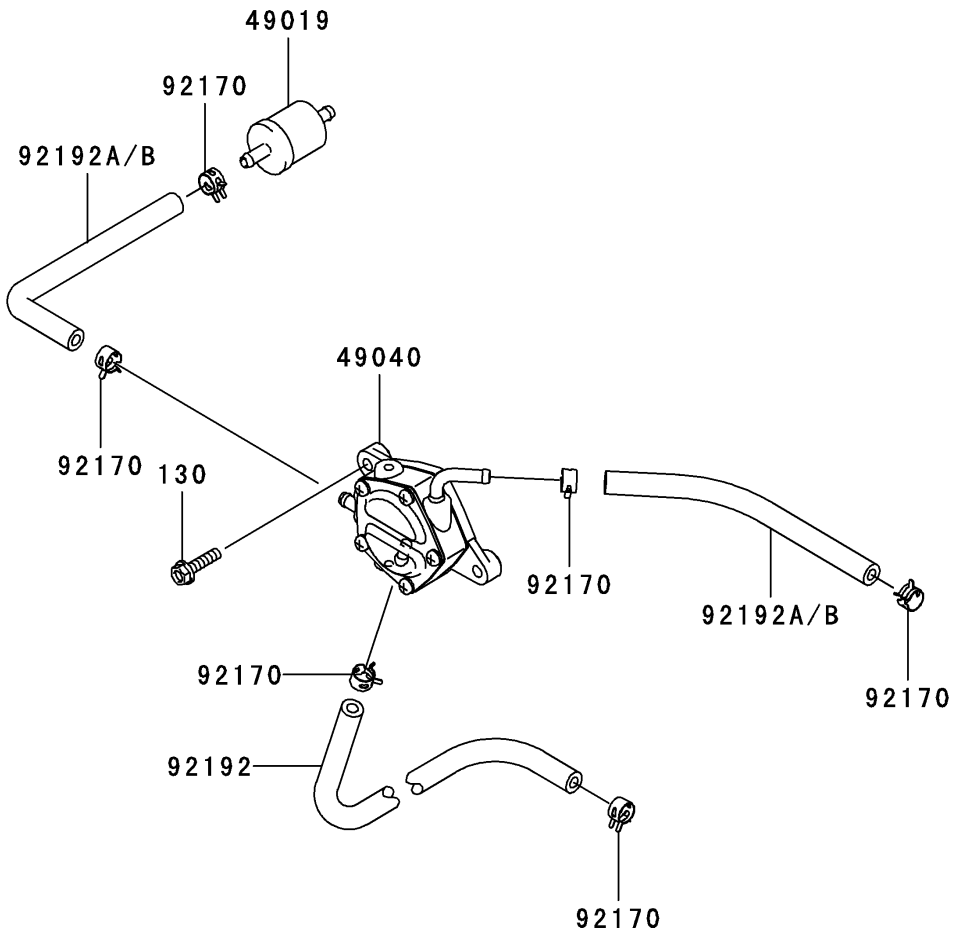

Ref. No.	Part No.	Description	Qty.
49019	KM-49019-7001	Filter-Fuel	1
49040	KM-49040-7006	Pump-Fuel	1
92170	KM-92170-2088	Clamp	6
92192	KM-92192-7077	Tube, 6.4 x 12.7x318	1
92192A	KM-92192-7080	Tube, 6.35x12.7x185	
92192B	KM-92192-7101	Tube, 6.35x12.7x185	2
130	KM-130AA0625	Bolt-Flanged, 6x25	2

FXT00V 37HP Starter - Figure 25 and Parts List

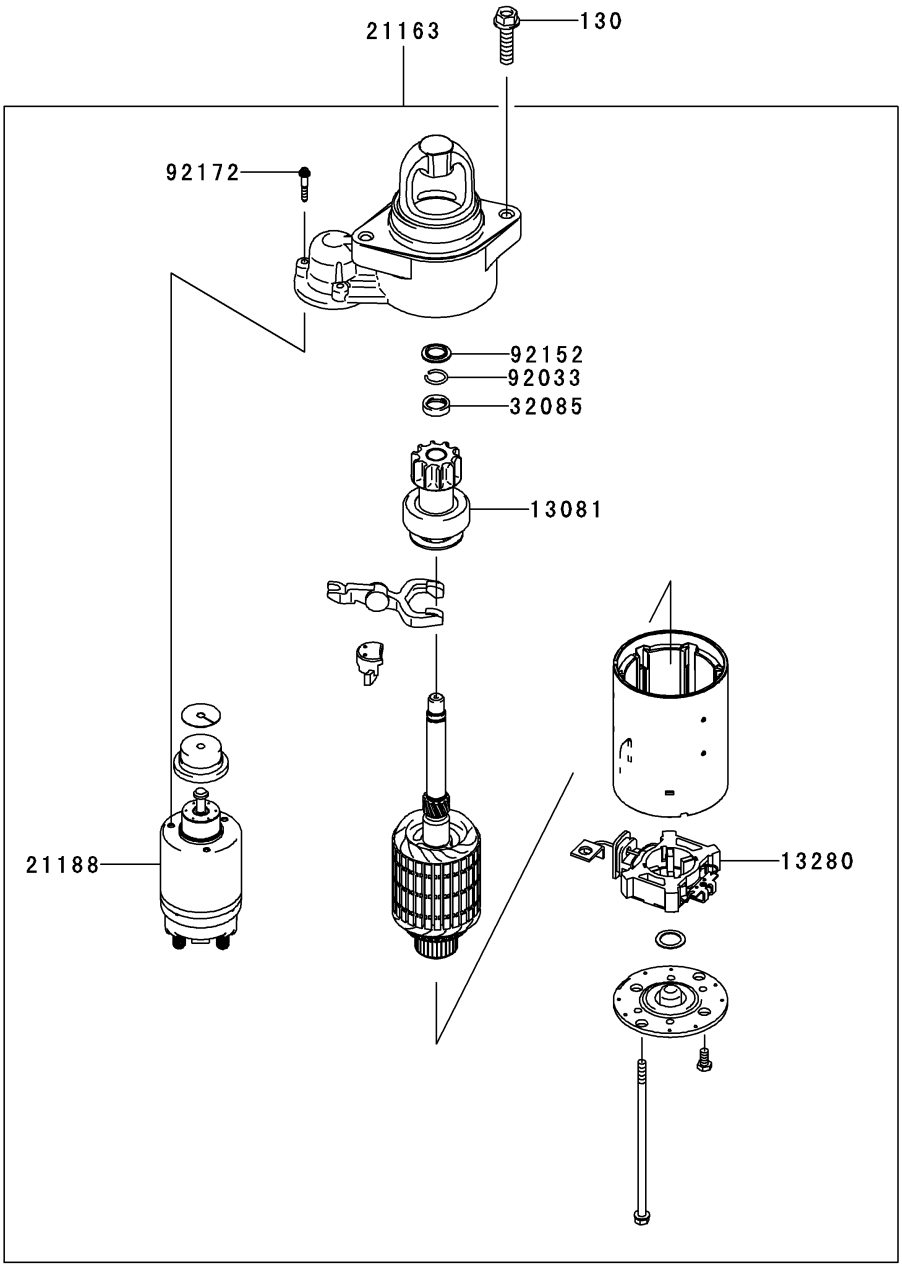

Ref. No.	Part No.	Description	Qty.
13081	KM-13081-7001	Clutch-Assy	1
13280	KM-13280-7002	Holder	1
21163	KM-21163-7021	Starter-Electric	1
21188	KM-21188-7005	Solenoid	1
32085	KM-32085-7001	Stopper	1
92033	KM-92033-7014	Ring-Snap	1
92152	KM-92152-7013	Collar	1
92172	KM-92172-7032	Screw	3
130	KM-130AA0830	Bolt-Flanged, 8x30	2

FXT00V 37HP Label - Figure 26 and Parts List

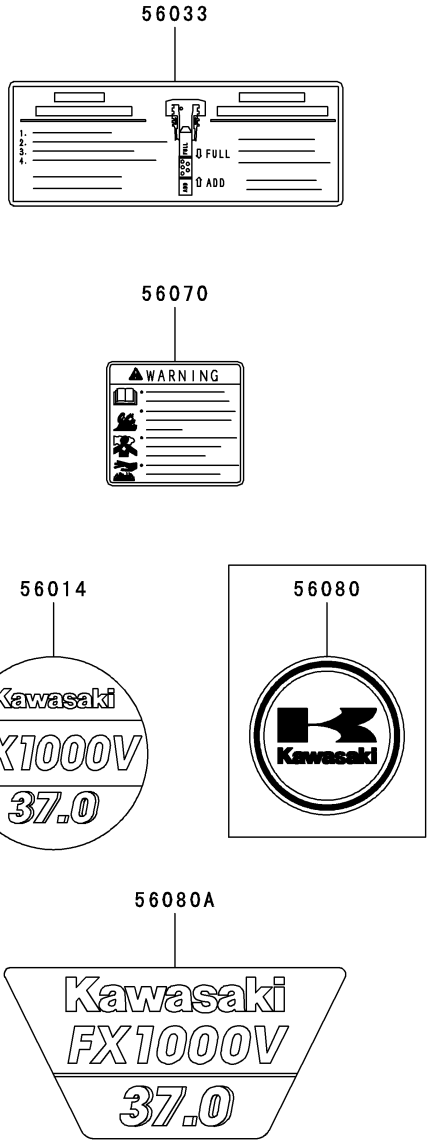

Ref. No.	Part No.	Description	Qty.
56014	KM-56014-7001	Emblem	1
56033	KM-56033-7002	Label-Manual	1
56070	KM-56070-7001	Label-Warning	1
56080	KM-56080-7002	Label-Brand	
56080A	KM-56080-7037	Label-Brand	1

Right Hand and Left Hand Wheel Motors- Figure 27

whitedriveproducts

Hydraulic Motor Exploded View

02004441 & 02004442

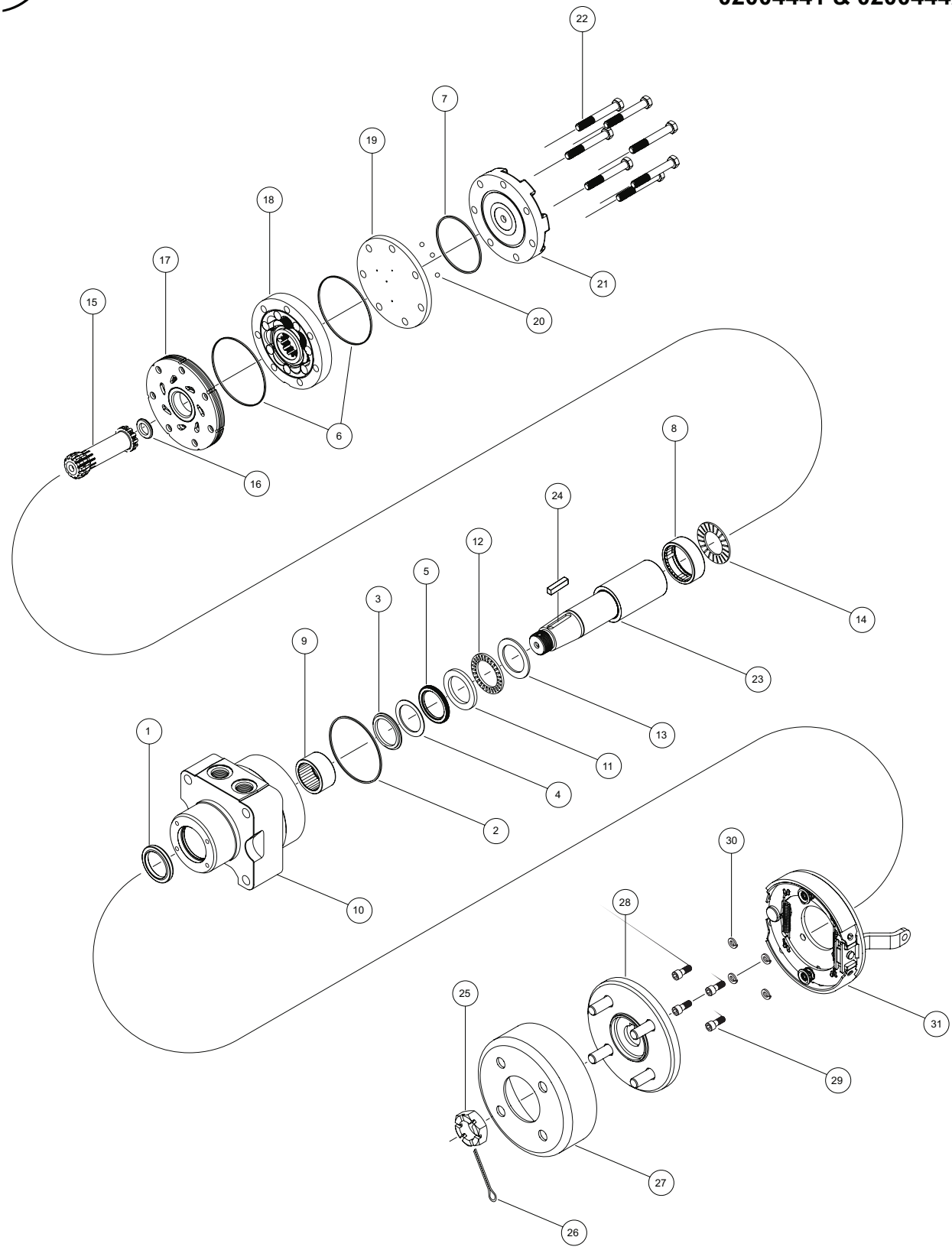

Right Hand and Left Hand Wheel Motors- Parts List for Figure 27

Ref. No.	Part No.	Description	Qty.
1		Dust Seal	1
2		Housing Seal	1
3		Back Up Ring	1
4		Back Up Seal	1
5		Shaft Seal	1
6		Body Seals	2
7		Endcover Seal	1
8	WH-500444004	Rear Housing Bearing includes (items 1-8)	1
9	WH-530018000	Front Housing Bearing	1
10	WH-530013012	Housing	1
11	WH-500018283	Front Thrust Washer	1
12	WH-500018282	Front Thrust Bearing	1
13	WH-300018002	Thrust Washer	1
14	WH-500018059	Rear Thrust Bearing	1
15	WH-500014009	Drive Link	1
16	WH-500018185	Drive Link Spacer	1
17	WH-500015006	Manifold	1
18	WH-500147002	Rotor Set	1
19	WH-500012001	Balance Plate	1
20	WH-500018048	Steel Balls	3
21	WH-500016001	Endcover	1
22	WH-500445014	Assembly Bolts	7
23	WH-500011315	Shaft	1
24	WH-500449106	Shaft Key	1
25	WH-500449304	Shaft Nut	1
26	WH-400018015	Cotter Pin	1
27	WH-530018007	6" Stamped Drum	1
28	WH-530018005	4-Lug Knott Hub	1
29	WH-400180050	Mounting Bolts	4
30	WH-400180045	Lock Washers	4
31	WH-530018006	Knott Brake	1

Right Hand BDP-12 Hydraulic Pump- Figure 28

PART NO. 02000905

PJ-5HCC-GG1B-XXXX SERVICE DRAWING

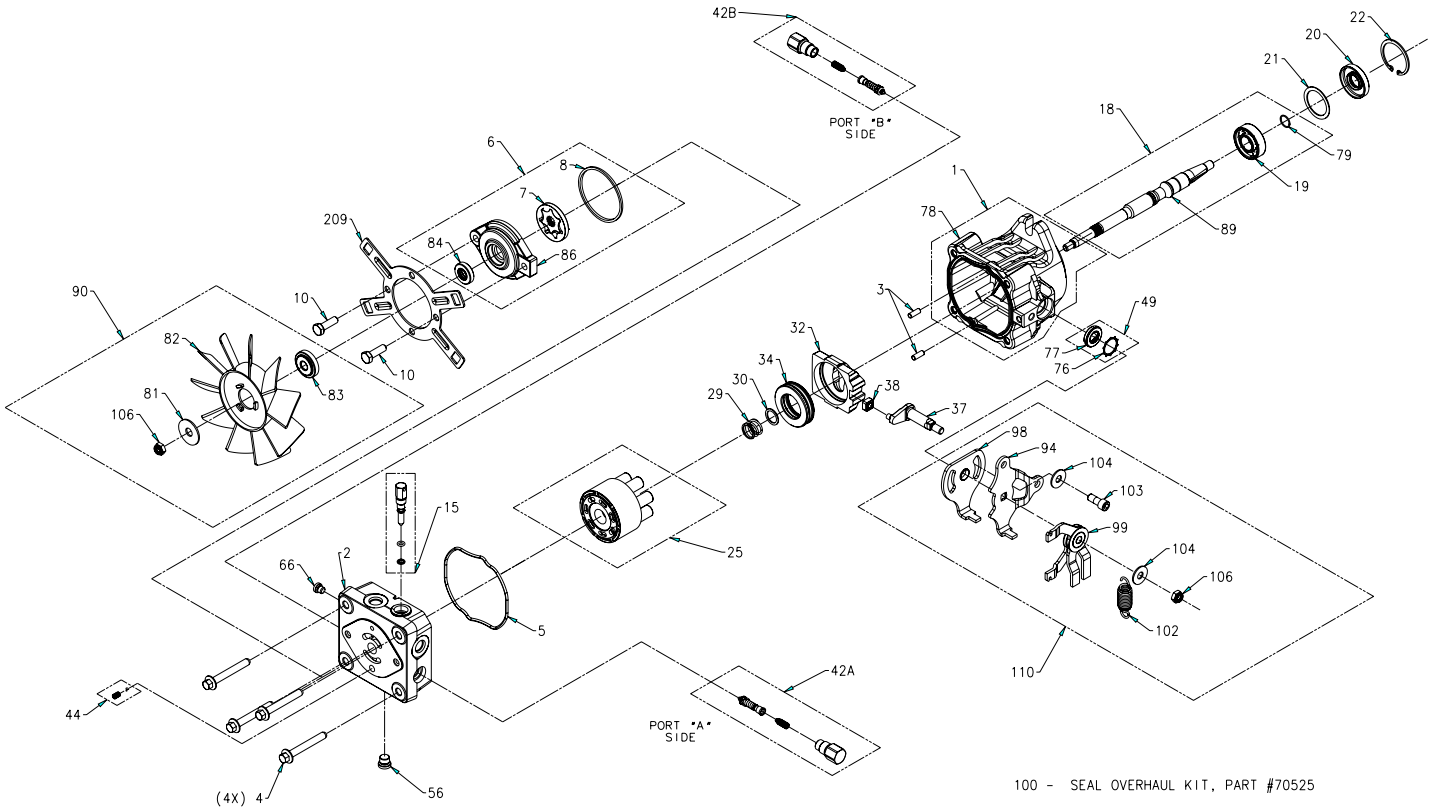

Right Hand BDP-12 Hydraulic Pump- Parts List for Figure 28

Ref. No.	Part No.	Description	Qty.
1	HG-70797	Kit, Housing	1
(78)		Housing, Pump	1
2	HG-52038	Kit, Endcap	1
(66)		Plug 9/16-18 (Metal)	1
3	HG-50641	Straight Headless Pin	2
4	HG-50969	Hex Flange Bolt M8-1.25 x 60mm Long	4
5	HG-52629	Housing, O-Ring	1
6	HG-71247	Kit, Charge Pump (STD CHG .19 ci/rev, Thru)	1
(7)		Gerotor	1
(8)		O-Ring	1
(84)		Seal	1
(86)		Housing, Charge Pump	1
10	HG-9007200-3116	Screw, 5/16-18 x 1.00 Long	2
15	HG-71248	Kit, Bypass Valve	1
18	HG-71252	Kit, Pump Shaft (15mm Tapered Keyed Thru)	1
(19)		Bearing, Ball 17 x 40 x 12	1
(79)		Ring, Ret. Wire .561 I.D.	1
(89)		Shaft, Input Tapered Keyed	1
20	HG-51161	Lip Seal 17 x 40 x 7 PTC	1
21	HG-50951	Spacer	1
22	HG-50329	Retaining Ring	1
25	HG-71170	Cylinder Block Kit	1
29	HG-2003014	Block Spring	1
30	HG-2003017	Block Thrust Washer	1
32	HG-2003087	Swashplate	1
34	HG-50551	Ball Thrust Bearing	1
37	HG-50807	Arm, Trunnion Tapered Square	1
38	HG-2000015	Slot Guide	1
42A	HG-70743	Kit, Shock Valve (200 Bar, .031 Orifice)	1
42B	HG-70743	Kit, Shock Valve (200 Bar, .031 Orifice)	1
44	HG-70402	Charge Relief Kit, (1/4 Plastic Ball & 2000029 Spring)	1
49	HG-2513043	Trunnion Seal / Retainer Kit	1
(76)		Ring, Ret. -Star Wash 1.0	1
(77)		Seal, Lip 12 x 25 x 5	1
56	HG-9005110-4400	Plug - 7/16-18 Steel (Diagnostic)	1
90	HG-71172	Kit, Fan	1
(81)		Washer, O.D. Slotted .40 x 1.55 x .06	1
(82)		Fan, 6", 10 Blade	1
(83)		Fan Hub	1
(106)		Nut, Lock, Side 5/16-24UNF-2B	1
100	HG-70525	Overhaul Seal Kit	1
(5)		O-Ring, Housing	1
(8)		O-Ring	1
(20)		Seal, Lip 17 x 40 x 7	1
(22)		Ring, Retaining	1
(76)		Ring, Retaining	1
(77)		Seal, Lip 12 x 25 x 5	1
209	HG-52016	Bracket, Shroud	1
110	HG-70794	Kit, RTN	1
(94)		Arm, Control	1
(98)		Arm, RTN	1
(99)		Assembly, RTN Bi-Directional	1
(102)		Spring, Extension (STD)	1
(103)		Screw, 5/16-24 x .75 (Patch)	1
(104)		Washer	2
(106)		Nut, Lock, Side 5/16-24UNF-2B	1
209	HG-52016	Bracket, Shroud	1

Left Hand BDP-12 Hydraulic Pump- Figure 29

PART NO. 02000906

PJ-5KCC-GG1B-XXXX SERVICE DRAWING

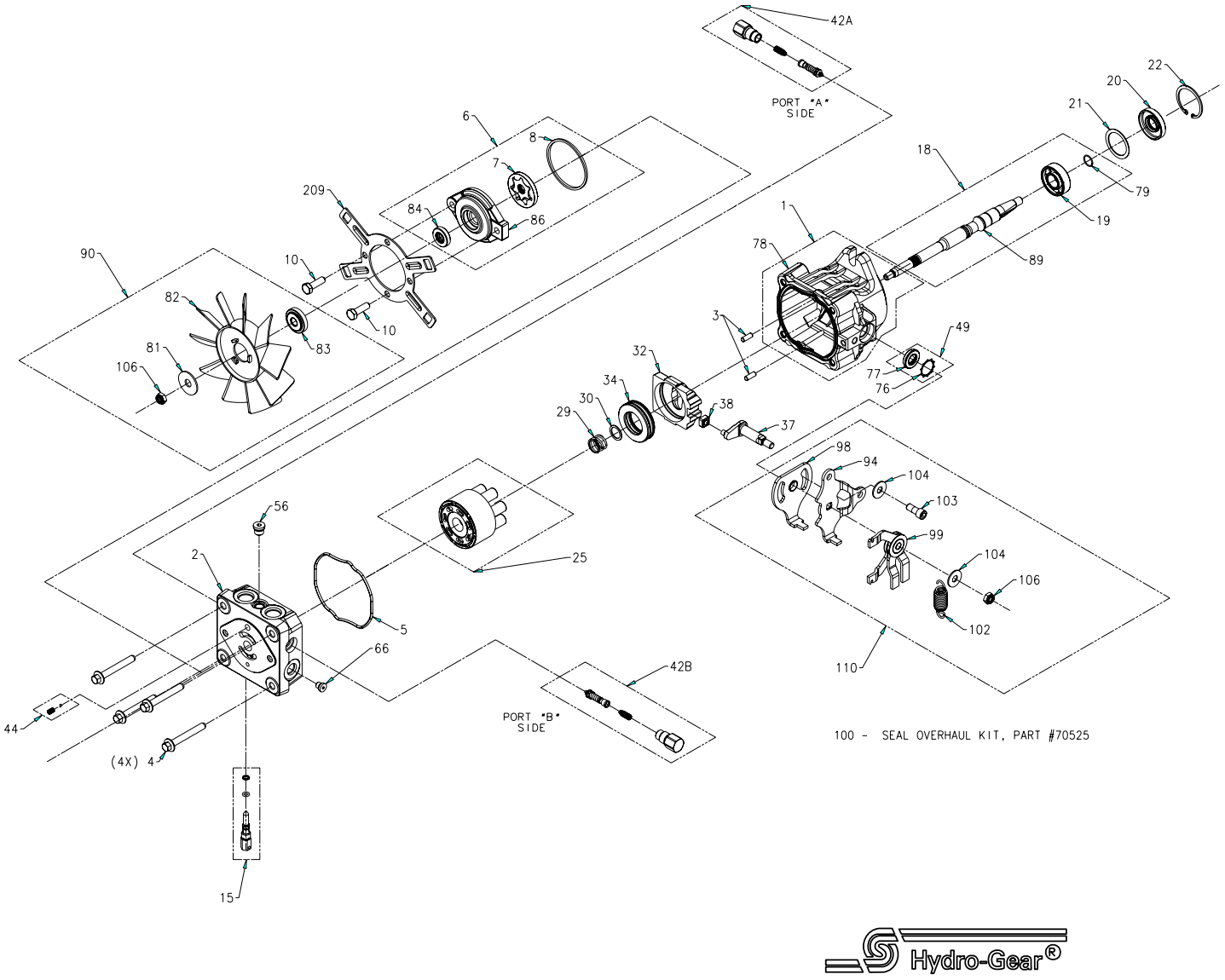

Left Hand BDP-12 Hydraulic Pump- Parts List for Figure 29

Ref. No.	Part No.	Description	Qty.
1	HG-70797	Kit, Housing	1
(78)		Housing, Pump	1
2	HG-52038	Kit, Endcap	1
(66)		Plug 9/16-18 (Metal)	1
3	HG-50641	Straight Headless Pin	2
4	HG-50969	Hex Flange Bolt M8-1.25 x 60mm Long	4
5	HG-52629	Housing, O-Ring	1
6	HG-71247	Kit, Charge Pump (STD CHG .19 ci/rev, Thru)	1
(7)		Gerotor	1
(8)		O-Ring	1
(84)		Seal	1
(86)		Housing, Charge Pump	1
10	HG-9007200-3116	Screw, 5/16-18 x 1.00 Long	2
15	HG-71248	Kit, Bypass Valve	1
18	HG-71252	Kit, Pump Shaft (15mm Tapered Keyed Thru)	1
(19)		Bearing, Ball 17 x 40 x 12	1
(79)		Ring, Ret. Wire .561 I.D.	1
(89)		Shaft, Input Tapered Keyed	1
20	HG-51161	Lip Seal 17 x 40 x 7 PTC	1
21	HG-50951	Spacer	1
22	HG-50329	Retaining Ring	1
25	HG-71170	Cylinder Block Kit	1
29	HG-2003014	Block Spring	1
30	HG-2003017	Block Thrust Washer	1
32	HG-2003087	Swashplate	1
34	HG-50551	Ball Thrust Bearing	1
37	HG-50807	Arm, Trunnion Tapered Square	1
38	HG-2000015	Slot Guide	1
42A	HG-70743	Kit, Shock Valve (200 Bar, .031 Orifice)	1
42B	HG-70743	Kit, Shock Valve (200 Bar, .031 Orifice)	1
44	HG-70402	Charge Relief Kit, (1/4 Plastic Ball & 2000029 Spring)	1
49	HG-2513043	Trunnion Seal / Retainer Kit	1
(76)		Ring, Ret. -Star Wash 1.0	1
(77)		Seal, Lip 12 x 25 x 5	1
56	HG-9005110-4400	Plug - 7/16-18 Steel (Diagnostic)	1
90	HG-71172	Kit, Fan	1
(81)		Washer, O.D. Slotted .40 x 1.55 x .06	1
(82)		Fan, 6", 10 Blade	1
(83)		Fan Hub	1
(106)		Nut, Lock, Side 5/16-24UNF-2B	1
100	HG-70525	Overhaul Seal Kit	1
(5)		O-Ring, Housing	1
(8)		O-Ring	1
(20)		Seal, Lip 17 x 40 x 7	1
(22)		Ring, Retaining	1
(76)		Ring, Retaining	1
(77)		Seal, Lip 12 x 25 x 5	1
209	HG-52016	Bracket, Shroud	1
110	HG-70794	Kit, RTN	1
(94)		Arm, Control	1
(98)		Arm, RTN	1
(99)		Assembly, RTN Bi-Directional	1
(102)		Spring, Extension (STD)	1
(103)		Screw, 5/16-24 x .75 (Patch)	1
(104)		Washer	2
(106)		Nut, Lock, Side 5/16-24UNF-2B	1
209	HG-52016	Bracket, Shroud	1

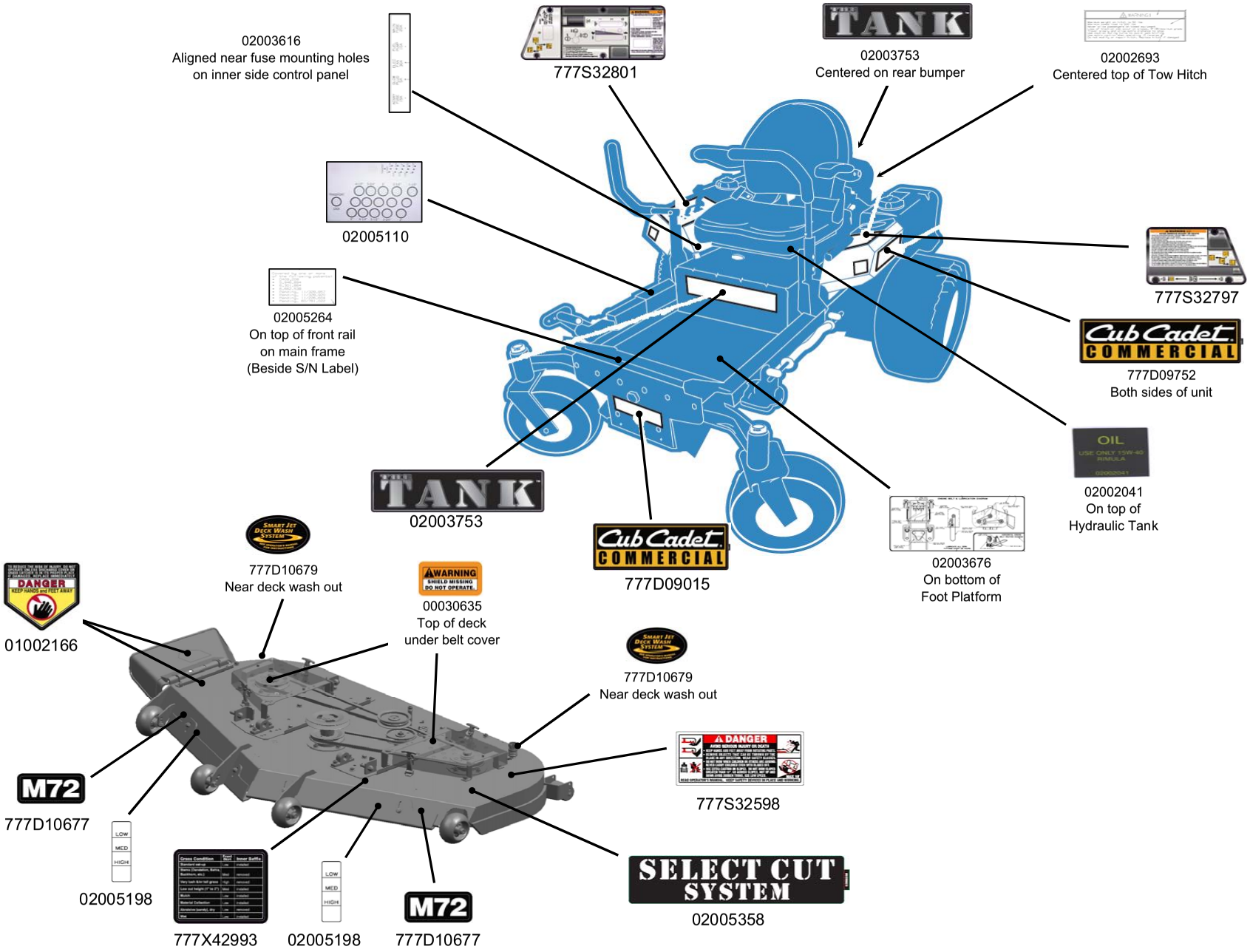
02003616
Aligned near fuse mounting holes
on inner side control panel
777S32801
02003753
Centered on rear bumper
02002693
Centered top of Tow Hitch
02005110
02005264
On top of front rail
on main frame
(Beside S/N Label)
777S32797
777D09752
Both sides of unit
02002041
On top of
Hydraulic Tank
02003753
777D09015
02003676
On bottom of
Foot Platform
777D10679
Near deck wash out
00030635
Top of deck
under belt cover
01002166
777D10679
Near deck wash out
777S32598
M72
777D10677
02005198
777X42993
02005198
777D10677
SELECT CUT
SYSTEM
02005358

This Page Intentionally Left Blank

This Page Intentionally Left Blank

This Page Intentionally Left Blank



Cub Cadet Commercial
P.O. Box 368023
Cleveland, OH 44136

Form No. 02004756 Rev. 08-4 01/31/2008