Safe Operation Practices • Set-Up • Operation • Maintenance • Service • Troubleshooting • Warranty

Cub Cadet COMMERCIAL

OPERATOR'S MANUAL

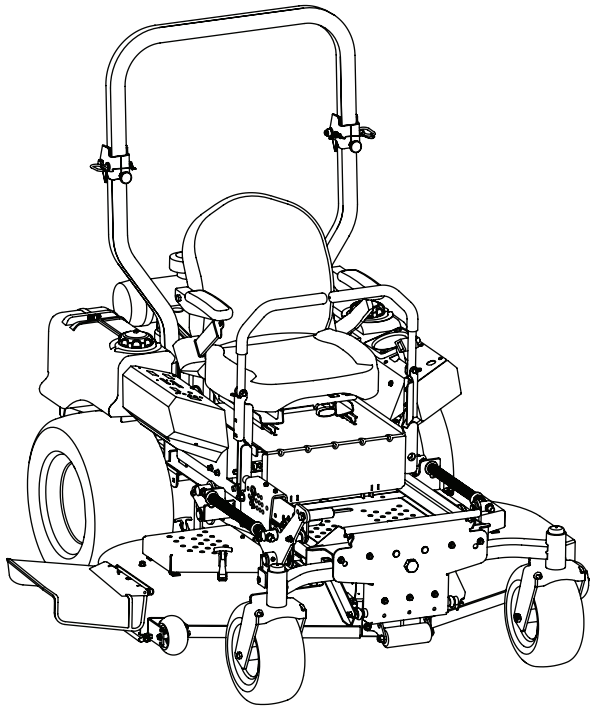

TANK M60
Kawasaki Twin

⚠ WARNING

READ AND FOLLOW ALL SAFETY RULES AND INSTRUCTIONS IN THIS MANUAL BEFORE ATTEMPTING TO OPERATE THIS MACHINE.
FAILURE TO COMPLY WITH THESE INSTRUCTIONS MAY RESULT IN PERSONAL INJURY.

CUB CADET LLC, P.O. BOX 361131 CLEVELAND, OHIO 44136-0019

Printed In USA

Form No. 769-05062A
(January 29, 2010)

To The Owner

1

Thank You

Thank you for purchasing a Cub Cadet Commercial Zero-Turn tractor. It was carefully engineered to provide excellent performance when properly operated and maintained.

Please read this entire manual prior to operating the equipment. It instructs you how to safely and easily set up, operate and maintain your machine. Please be sure that you, and any other persons who will operate the machine, carefully follow the recommended safety practices at all times. Failure to do so could result in personal injury or property damage.

All information in this manual is relative to the most recent product information available at the time of printing. Review this manual frequently to familiarize yourself with the machine, its features and operation. Please be aware that this Operator's Manual may cover a range of product specifications for various models. Characteristics and features discussed and/or illustrated in this manual may not be applicable to all models. We reserve the right to change product specifications, designs and equipment without notice and without incurring obligation.

If you have any problems or questions concerning the machine, phone your local Cub Cadet dealer or contact us directly. Cub Cadet's Customer Support telephone numbers, website address and mailing address can be found on this page. We want to ensure your complete satisfaction at all times.

Throughout this manual, all references to *right* and *left* side of the machine are observed from the operating position.

Table of Contents

Safe Operation Practices 3
Assembly & Set-Up 10
Controls & Features 14
Operation 17
Maintenance & Adjustments 24
Service 35
Troubleshooting 39
Replacements 41
Attachments & Accessories 43
Specifications 44
Warranties 46

Record Product Information

Before setting up and operating your new equipment, please locate the model plate on the equipment and record the information in the provided area to the right. Pivot the seat assembly forward to locate the model plate on the frame under the seat. This information will be necessary, should you seek technical support via our web site or with your local Cub Cadet dealer.

Model Number

Serial Number

Customer Support

If you have difficulty assembling this product or have any questions regarding the controls, operation, or maintenance of this machine, you can seek help from the experts. Choose from the options below:

◊ Visit us on the web at www.cubcadet.com

◊ Locate your nearest Cub Cadet Dealer at (877) 282-8684

◊ Write us at Cub Cadet LLC • P.O. Box 361131 • Cleveland, OH • 44136-0019

Important Safe Operation Practices

2

WARNING! This symbol points out important safety instructions which, if not followed, could endanger the personal safety and/or property of yourself and others. Read and follow all instructions in this manual before attempting to operate this machine. Failure to comply with these instructions may result in personal injury.
When you see this symbol. **HEED ITS WARNING!**

CALIFORNIA PROPOSITION 65

WARNING! Engine Exhaust, some of its constituents, and certain vehicle components contain or emit chemicals known to State of California to cause cancer and birth defects or other reproductive harm.

WARNING! Battery posts, terminals, and related accessories contain lead and lead compounds, chemicals known to the State of California to cause cancer and reproductive harm. *Wash hands after handling*

SPARK ARRESTOR

WARNING! This machine is equipped with an internal combustion engine and should not be used on or near any unimproved forest-covered, brush-covered or grass-covered land unless the engine's exhaust system is equipped with a spark arrestor meeting applicable local or state laws (if any).

If a spark arrestor is used, it should be maintained in effective working order by the operator. In the State of California the above is required by law (Section 4442 of the California Public Resources Code). Other states may have similar laws. Federal laws apply on federal lands.
A spark arrestor for the muffler is available through your nearest engine authorized service dealer or contact the service department, P.O. Box 361131 Cleveland, Ohio 44136-0019.

DANGER! This machine was built to be operated according to the safe operation practices in this manual. As with any type of power equipment, carelessness or error on the part of the operator can result in serious injury. This machine is capable of amputating hands and feet and throwing objects. Failure to observe the following safety instructions could result in serious injury or death.

General Operation

1. Read, understand, and follow all instructions on the machine and in the manual(s) before attempting to assemble and operate. Keep this manual in a safe place for future and regular reference and for ordering replacement parts.
2. Be familiar with all controls and their proper operation. Know how to stop the machine and disengage them quickly.
3. Do not allow anyone to operate or maintain this machine who has not read the manual. Never permit children under the age of 16 to operate this machine.
4. Do not remove any shields, guards, decals or safety devices. If a shield, guard, decal or safety device is damaged or does not function, repair or replace it before operating the machine.
5. To help avoid blade contact or a thrown object injury, keep bystanders, helpers, children and pets at least 75 feet from the machine while it is in operation. Stop machine if anyone enters the area.
6. Thoroughly inspect the area where the equipment is to be used. Remove all stones, sticks, wire, bones, toys, and other foreign objects which could be picked up and thrown by the blade(s). Thrown objects can cause serious personal injury.

7. Plan your mowing pattern to avoid discharge of material toward roads, sidewalks, bystanders and the like. Also, avoid discharging material against a wall or obstruction which may cause discharged material to ricochet back toward the operator.
8. Always wear safety glasses, long pants, gloves, hearing protection and safety shoes when operating or maintaining this unit. Do not wear loose-fitting clothing and do not operate the machine for more than 2 hours without hearing protection.
9. Be aware of the mower and attachment discharge direction and do not point it at anyone. Do not operate the mower without the discharge cover or entire grass catcher in its proper place.
10. Do not put hands or feet near rotating parts or under the cutting deck. Contact with the blade(s) can amputate hands and feet.
11. A missing or damaged discharge cover can cause blade contact or thrown object injuries.
12. Stop the blade(s) when crossing gravel drives, walks, or roads and while not cutting grass.
13. Watch for traffic when operating near or crossing roadways. This machine is not intended for use on any public roadway.
14. Do not operate the machine while under the influence of alcohol or drugs.
15. Mow only in daylight or good artificial light.
16. Never carry passengers.
17. Back up slowly. Always look down and behind before and while backing to avoid a back-over accident. Be aware and pay attention to the safety system function that stops power to the blades when driving in reverse. If not fuctioning properly, contact an authorized dealer for safety system inspection and repair.
18. Slow down before turning. Operate the machine smoothly. Avoid erratic operation and excessive speed.
19. Disengage blade(s), set parking brake, stop engine and wait until the blade(s) come to a complete stop before removing grass catcher, emptying grass, unclogging chute, removing any grass or debris, or making any adjustments.
20. Never leave a running machine unattended. Always turn off blade(s), place drive control levers in neutral, set parking brake, stop engine and remove key before dismounting.
21. Use extra care when loading or unloading the machine into a trailer or truck. This machine should not be driven up or down ramp(s), because the machine could tip over, causing serious personal injury. The machine must be pushed manually on ramp(s) to load or unload properly.
22. Muffler and engine become hot and can cause a burn. Do not touch.
23. Check overhead clearances carefully before driving under low hanging tree branches, wires, door openings etc., where the operator may be struck or pulled from the machine, which could result in serious injury.
24. Disengage all attachment clutches, set the parking brake to the 'ON' position and move the RH and LH drive control levers to the neutral position and lock before attempting to start the engine.
25. Do not attempt to mow through unusually tall, dry grass (e.g., pasture) or piles of dry leaves. Dry grass or leaves may contact the engine exhaust and/or build up on the mower deck presenting a potential fire hazard.
26. Never attempt to operate the traction unit without the mowing deck attached.
27. Keep the machine and especially the engine/pump and hydraulic components clean and free of grease, grass and leaves to reduce the potential for over heating and fire.
28. Use only accessories and attachments approved for this machine by the machine manufacturer. Read, understand and follow all instructions provided with the approved accessory or attachment.
29. Data indicates that operators, age 60 years and above, are involved in a large percentage of riding mower-related injuries. These operators should evaluate their ability to operate the riding mower safely enough to protect themselves and others from serious injury.
30. If situations occur which are not covered in this manual, use care and good judgment. Contact your customer service representative for assistance.
31. Do not operate or start machines if there are fuel or oil leaks or spillage. Clean it up.
32. Do not stop or park machine over dry leaves, grass, debris, etc. that could be combustible.
33. Do not operate machines that have been damaged or have not been properly maintained. If the machine has been damaged, then have it repaired.
34. When looking for oil leaks, never run your hand over hydraulic hoses, lines or fittings. Never tighten or adjust hydraulic hoses, lines or fittings while the system is under pressure. If high-pressure oil penetrates the skin, the oil must be removed within a few hours by a doctor familiar with this form of injury or gangrene may result. Do not check for hydraulic leaks with any part of the body.
35. When operating this machine in the forward direction, do not allow the ground speed control levers to return to the neutral position on their own. Always maintain a firm grip on the levers, operate them smoothly and avoid any sudden movements of the levers when starting or stopping.

Slope Operation

Slopes are a major factor related to loss of control and tip-over accidents which can result in severe injury or death. All slopes require extra caution. If you cannot back up the slope or if you feel uneasy on it, do not mow it.

For your safety, use the slope gauge included as part of this manual to measure slopes before operating this machine on a sloped or hilly area. If the slope is greater than 15 degrees as shown on the slope gauge, do not operate this machine on that area or serious injury could result.

Do:

1. Mow across slopes, not up and down. Exercise extreme caution when changing direction on slopes.
2. Watch for holes, ruts, bumps, rocks, or other hidden objects. Uneven terrain could overturn the machine. Tall grass can hide obstacles.

3. Use slow speed. Choose a low enough speed so that you will not have to stop while on the slope. Avoid starting or stopping on a slope. If the tires are unable to maintain traction, disengage the blades and proceed slowly and carefully straight down the slope.
4. Follow the manufacturer's recommendations for wheel weights or counterweights to improve stability.
5. Use extra care with grass catchers or other attachments. These can change the stability of the machine.
6. Keep all movement on the slopes slow and gradual. Do not make sudden changes in speed or direction. Rapid acceleration or deceleration could cause the front of the machine to lift and rapidly flip over backwards, which could cause serious injury.

Do Not:

1. Do not turn on slopes unless necessary; then turn slowly uphill and use extra care while turning.
2. Do not mow near drop-offs, ditches or embankments. The mower could suddenly turn over if a wheel is over the edge of a cliff, ditch, or if an edge caves in.
3. Do not try to stabilize the machine by putting your foot on the ground.
4. Do not use a grass catcher on steep slopes.
5. Do not mow on wet grass. Reduced traction could cause sliding.
6. Do not tow heavy pull behind attachments (e.g. loaded dump cart, lawn roller, etc.) on slopes greater than 5 degrees. When going down hill, the extra weight tends to push the tractor and may cause you to loose control (e.g. tractor may speed up, braking and steering ability are reduced, attachment may jack-knife and cause tractor to overturn).

Children

1. Tragic accidents can occur if the operator is not alert to the presence of children. Children are often attracted to the machine and the mowing activity. They do not understand the dangers. Never assume that children will remain where you last saw them.
    a. Keep children out of the mowing area and in watchful care of a responsible adult other than the operator.
    b. Be alert and turn machine off if a child enters the area.
    c. To avoid back-over accidents, always look behind and down for small children.
    d. Never carry children, even with the blade(s) shut off. They may fall off and be seriously injured or interfere with safe machine operation.
    e. Use extreme care when approaching blind corners, doorways, shrubs, trees or other objects that may block your vision of a child who may run into the path of the machine.
    f. Keep children away from hot or running engines. They can suffer burns from a hot muffler.
    g. Remove key when machine is unattended to prevent unauthorized operation.
2. Never allow children under 16 years of age to operate this machine. Children 16 and over should read and understand the instructions and safe operation practices in this manual and on the machine and should be trained and supervised by an adult.

Towing

1. Do not tow on slopes exceeding 5 degrees.
2. Tow only with a machine that has a hitch designed for towing. Do not attach towed equipment except at the hitch point.
3. Follow the manufacturers recommendation for weight limits for towed equipment and towing on slopes.
4. Never allow children or others in or on towed equipment.
5. On slopes, the weight of the towed equipment may cause loss of traction and loss of control.
6. Travel slowly and allow extra distance to stop.
7. Do not shift to neutral and coast downhill.

Transporting Machines

1. Machines operated on public roads must comply with state & local ordinances, SAE J137, and ANSI/ASABE S279.
2. Use care when loading or unloading machines onto trailers and trucks.
3. If ramps are used, they must be full width, and secured to the trailer or truck.
4. Machines must be secured onto trailers and trucks with straps, chains, cables, ropes, or other means deemed adequate for that purpose. The front and rear of the machines must be secured to the trailer or truck in both the lateral and vertical directions.

Operator Protective System (OPS)

1. This machine is equipped with an Operator Protective System (OPS), which includes:
    a. A Roll Over Protective Structure (ROPS) or Operator Protective Device (OPD) of the fixed or folding configuration.
    b. Seat belt assembly with retractable function.
2. ROPS and OPDs are structures designed to provide a crush-resistant space for the operator when properly seat-belted within the designated seating area of the machine in the event of a machine tip-over or roll-over. Folding ROPS and OPDs shall be used in their fully upright and locked configurations except in those circumstances whereby they need to be momentarily folded-down to avoid contact with items such as tree limbs, clothes lines, guy wires, buildings, etc. At other times and conditions, ROPS and OPDs shall be in their fully upright and locked configurations.



DANGER: Damaged ROPS and OPDs must be replaced prior to operator use!

3. Seat belts shall be used and shall be properly fastened about the operator's waist at all times, except when the ROPS or OPDs are:
    a. Not properly installed and/or not properly secured onto the machine.
    b. Damaged in such manner that their structural integrity has been compromised.
    c. Not in their fully upright and locked position.
4. Seat belts are attached to the movable portion of the seat when suspension seats are utilized, and therefore the seat-mounting base must be secured to its pivot means and the pivot means latched to the frame of the machine. Seat belts are attached to the seat or the frame of the machine when non-suspension (standard) seats are provided, however, if a suspension kit is added to a seat, the seat belt must be attached to the movable portion of the seat or suspension mechanism, the seat-mounting base must be secured to its pivot means, and the pivot means be latched to the frame of the machine.



DANGER: If ROPS and OPDs are folded down or missing, seat belts shall not be fastened. Worn or damaged seat belt assemblies must be replaced prior to operator use.

5. Brush Guards and canopies can afford additional protection for the operator. The Brush Guard can deflect tree limbs, clothes lines, and other obstacles that otherwise could come in contact with the ROPS and OPDs. Contact of ROPS and OPDs by items such as tree limbs, clothes lines, guy wires, and buildings, could create hazardous conditions whereby the machine could experience a tip-over or roll-over. The canopy can provide protection for the operator from some environmental exposure (sunlight, rain, etc.). Work lights may be available.
6. The ROPS and seat belt are integral parts of this machine and should not be tampered with, modified in any manner, or removed.
7. The ROPS extends above and behind the operator position, and therefore the operator must be aware of potential contact of the ROPS with items such as trees, buildings, doorways, clothes lines, utility wires, etc., that could cause the machine to upset or rollover. Use caution in (or avoid) areas where the ROPS could come in contact with any structures, trees, etc.
8. The ROPS and seat belt add additional mass that elevates the machine's Center of Gravity (C.G.) which negatively affects the machine's stability and traction. Use extra caution when operating on slopes.
9. Inspect the ROPS and seat belt assemblies on a regular basis for damage and improper operation. Replace all components that are damaged or are not functioning properly with authorized replacement parts.
10. Failure to use the seat belt properly could result in serious injury or death if an accidental overturn occurs. In order for the ROPS to be effective, the seat belt must be securely fastened around the operator at all times when the operator is on the machine. Contact with the ROPS during an overturn could cause serious injury or death.
11. The ROPS will not prevent the machine from upsets or roll overs.
12. Only approved attachments should be used on this machine.

Hydraulic Devices and Systems

Hydraulic fluid escaping under pressure may have sufficient force to penetrate skin and to cause serious injury. If foreign fluid is injected into the skin, it must be surgically removed within a few hours by a doctor familiar with this form of injury, or gangrene may result.



WARNING: Keep body and hands away from pinholes or nozzles that could eject hydraulic fluid under high pressure. Use paper or cardboard, not hands, to search for leaks!

Safely relieve all pressure in the system before performing any work on the system, and make sure that:

- The ignition switch is OFF
- The key is removed
- The engine spark plug wire(s) removed
- All connections to the negative terminal of the battery are removed
- The park brake is set
- All by-pass valves, if so equipped, are open
- Hydraulic controls are actuated to release pressure on pumps, cylinders, etc. If "float" positions are available, they should be used**.**

After the above operations are completed, it should be safe to begin disconnecting the lines or components. It is still a good idea to cover the connection with a cloth shield and then gently loosen connections.



WARNING: Make sure all hydraulic fluid connections are tight and all hydraulic hoses and lines are in good condition before applying pressure to the system.

Service

Safe Handling of Gasoline:

1. To avoid personal injury or property damage use extreme care in handling gasoline. **Gasoline is extremely flammable and the vapors are explosive.** Serious personal injury can occur when gasoline is spilled on yourself or your clothes which can ignite. Wash your skin and change clothes immediately.
    a. Use only an approved gasoline container.
    b. To prevent static discharge, never fill containers inside a vehicle or on a truck or trailer bed with a plastic liner. Always place containers on the ground away from your vehicle before filling.
    c. When practical, remove gas-powered equipment from the truck or trailer and refuel it on the ground. If this is not possible, then refuel such equipment on a trailer with a portable container, rather than from a gasoline dispenser nozzle.

d. To avoid static discharge, keep the nozzle in contact with the rim of the fuel tank or container opening at all times until fueling is complete. Do not use a nozzle lock-open device.

e. Extinguish all cigarettes, cigars, pipes and other sources of ignition.

f. Never fuel machine indoors near an open flame, spark or pilot light as on a water heater, space heater, furnace, clothes dryer or other gas appliances.

g. If the fuel container spout will not fit inside the fuel tank opening, use a funnel.

h. Never remove gas cap or add fuel while the engine is hot or running. Allow engine to cool at least two minutes before refueling.

i. Never over fill fuel tank. Fill tank to no more than 1 inch below bottom of filler neck to allow space for fuel expansion.

j. Replace gasoline cap and tighten securely.

k. If gasoline is spilled, wipe it off the engine and equipment. Move machine to another area. Wait 5 minutes before starting the engine.

l. To reduce fire hazards, keep machine free of grass, leaves, or other debris build-up. Clean up oil or fuel spillage and remove any fuel soaked debris.

m. Never operate/store the machine or fuel container inside where there is an open flame, spark or pilot light as on a water heater, space heater, furnace, clothes dryer or other gas appliances.

n. Allow a machine to cool at least five minutes before storing.

o. Do not use gasoline fuel classified above E-10 (I.E., E-15 through E-85) as it could cause severe damage to the engine and fuel system.

General Service

1. Never run an engine indoors or in a poorly ventilated area. Engine exhaust contains carbon monoxide, an odorless, and deadly gas.
2. Before cleaning, repairing, or inspecting, make certain the blade(s) and all moving parts have stopped. Disconnect the spark plug wires and remove the key from the ignition to prevent unintended starting.
3. Periodically check to make sure the blades come to complete stop within approximately (5) five seconds after operating the blade disengagement control. If the blades do not stop within the this time frame, your machine should be serviced.
4. Regularly check the safety interlock system for proper function, as described later in this manual. If the safety interlock system does not function properly, have your machine serviced.
5. Check the blade(s) and engine mounting bolts at frequent intervals for proper tightness. Also, visually inspect blade(s) for damage (e.g., excessive wear, bent, cracked). Replace the blade(s) with the original equipment manufacturer's (O.E.M.) blade(s) only, listed in this manual. "Use of parts which do not meet the original equipment specifications may lead to improper performance and compromise safety!"
6. Mower blades are sharp. Wrap the blade or wear gloves, and use extra caution when servicing them.
7. Keep all nuts, bolts, and screws tight to be sure the equipment is in safe working condition.
8. Never tamper with the safety interlock system or other safety devices. Check their proper operation regularly.
9. After striking a foreign object, stop the engine, disconnect the spark plug wire(s) and ground against the engine. Thoroughly inspect the machine for any damage. Repair the damage before starting and operating.
10. Never attempt to make adjustments or repairs to the machine while the engine is running.
11. Grass catcher components and the discharge cover are subject to wear and damage which could expose moving parts or allow objects to be thrown. For safety protection, frequently check components and replace immediately with original equipment manufacturer's (O.E.M.) parts only, listed in this manual. "Use of parts which do not meet the original equipment specifications may lead to improper performance and compromise safety!"
12. Do not change the engine governor settings or over-speed the engine. The governor controls the maximum safe operating speed of the engine.
13. Maintain or replace safety and instruction labels, as necessary.
14. Observe proper disposal laws and regulations for gas, oil, etc. to protect the environment.

Do not modify engine

To avoid serious injury or death, do not modify engine in any way. Tampering with the governor setting can lead to a runaway engine and cause it to operate at unsafe speeds. Never tamper with factory setting of engine governor.

Notice Regarding Emissions

Engines which are certified to comply with California and federal EPA emission regulations for SORE (Small Off Road Equipment) are certified to operate on regular unleaded gasoline, and may include the following emission control systems: Engine Modification (EM) and Three Way Catalyst (TWC) if so equipped.

Safety Symbols

This page depicts and describes safety symbols that may appear on this product. Read, understand, and follow all instructions on the machine before attempting to assemble and operate.

Symbol	Description
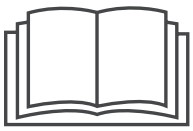	READ THE OPERATOR'S MANUAL(S) Read, understand, and follow all instructions in the manual(s) before attempting to assemble and operate
	WARNING— ROTATING BLADES Do not put hands or feet near rotating parts or under the cutting deck. Contact with the blade(s) can amputate hands and feet.
	WARNING—THROWN OBJECTS This machine may pick up and throw and objects which can cause serious personal injury.
	WARNING—THROWN OBJECTS This machine may pick up and throw and objects which can cause serious personal injury.
	BYSTANDERS Keep bystanders, helpers, children and pets at least 75 feet from the machine while it is in operation.
	WARNING— SLOPE OPERATION Do not operate this machine on a slope greater than 15 degrees.
	DANGER — ROTATING BLADES To reduce the risk of injury, keep hands and feet away. Do not operate unless discharge cover or grass catcher is in its proper place. If damaged, replace immediately.



WARNING! Your Responsibility—Restrict the use of this power machine to persons who read, understand and follow the warnings and instructions in this manual and on the machine.

SAVE THESE INSTRUCTIONS!

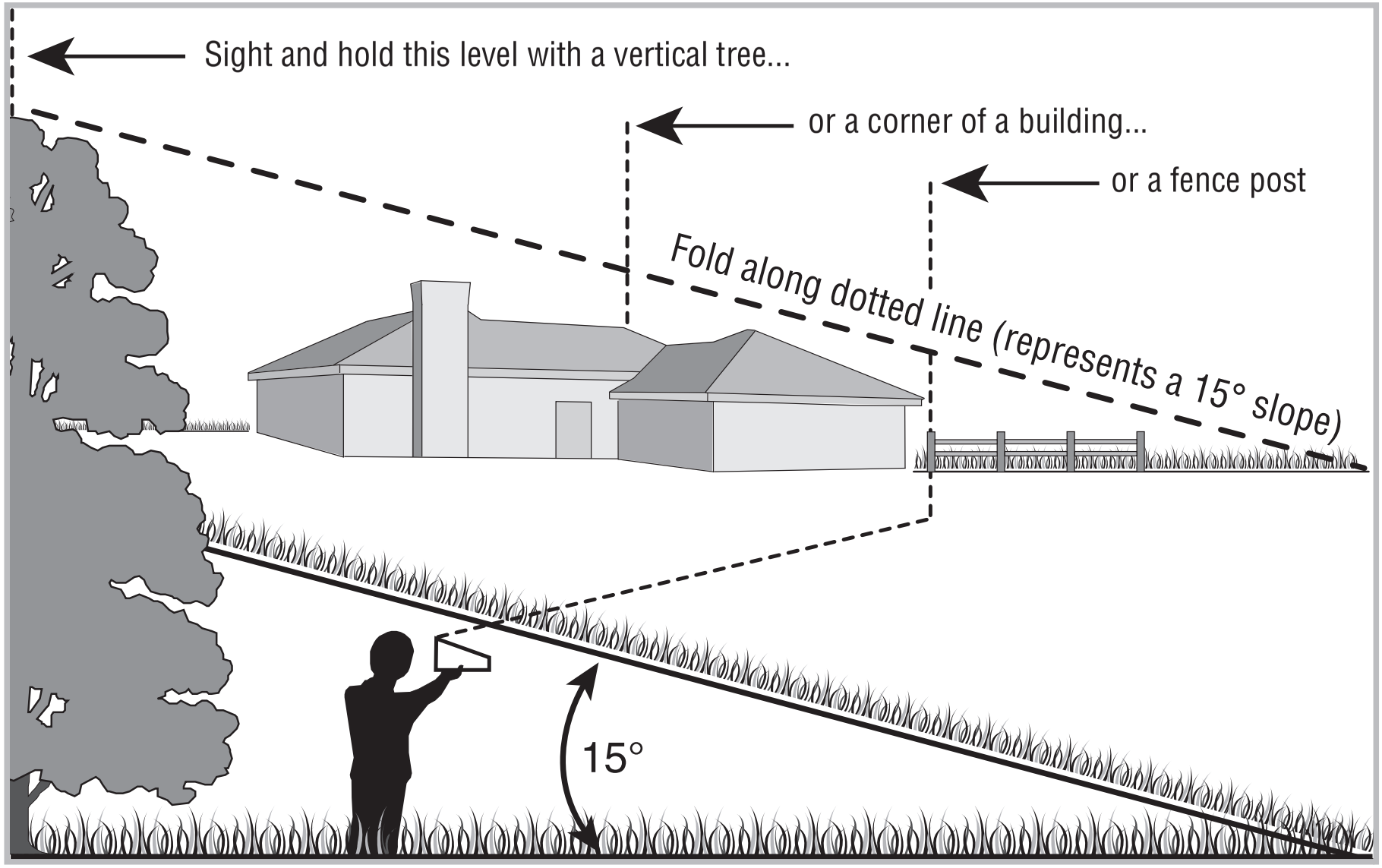

Use this page as a guide to determine slopes where you may not operate safely.

WARNING! Do not operate your lawn mower on such slopes. Do not mow on inclines with a slope in excess of 15 degrees (a rise of approximately 2-1/2 feet every 10 feet). A riding mower could overturn and cause serious injury.

OPERATE TANK zero turn tractors across the face of slopes rather than up and down. Begin with the first pass across the bottom of the slope and turn uphill at the end of each pass whenever possible.

Assembly & Set-Up

3

Contents of Crate

- One Lawn Tractor
- One Tractor Operator's Manual
- One Deck Wash Hose Coupler
- One Engine Operator's Manual

Tractor Preparation

Remove the upper crating material from the shipping pallet, and cut any bands or tie straps securing the tractor to the pallet.

Use the lift handle to raise the deck to its highest position. Locate the valves on the hydraulic pump. Turn the valves counter-clockwise (using a standard 7/16" wrench) one quarter turn to push the unit off the crate. After pushing the mower to the desired location, return both valves to the operating position by turning the valve clockwise, but do not overtighten. See Fig. 3-1.

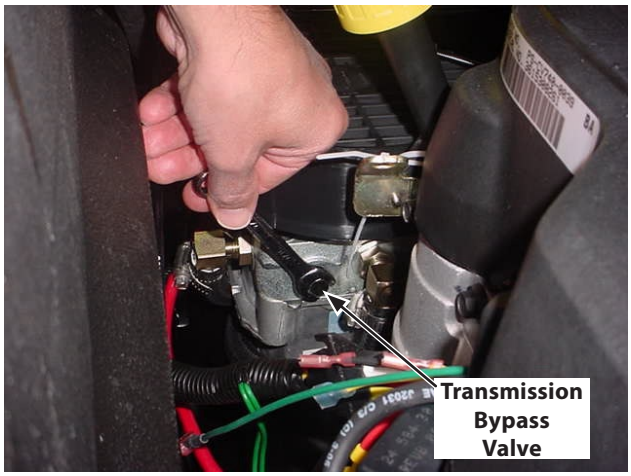

Figure 3-1

Remove the deck wash system nozzle adapter from the manual bag and store for future use. Cut the wire tie holding the chute deflector up and discard any packing material.

Install Roll Over Protective System (ROPS)

The Roll Over Protective System (ROPS) has not been installed on your unit for shipping purposes. Using the hardware found in the Roll Over Protective System container, install it on your unit as follows:

1. Insert each of the lower section ROPS posts into the brackets welded to the main frame. See Fig. 3-2.

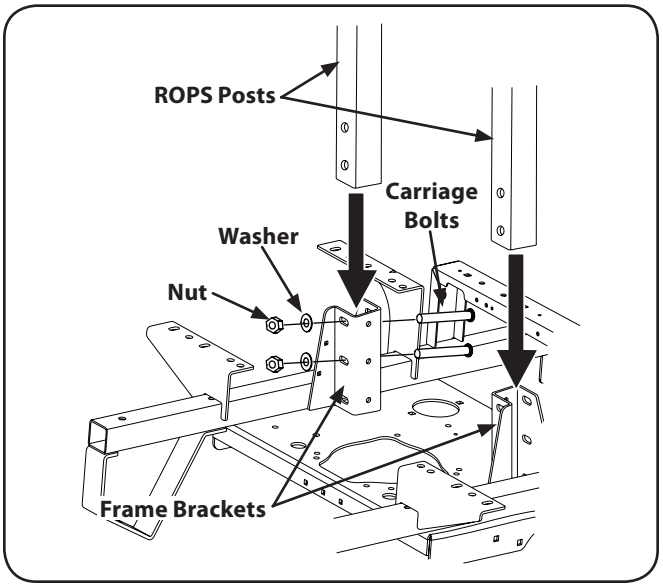

Figure 3-2

NOTE: The ROPS pivot holes should be positioned toward the rear of the tractor.

2. Insert the carriage bolts (½-13 x 3.00) (two per side) from the front toward the rear. Alternately from the rear toward the front if access is restricted.

   NOTE: The mounting hardware is accessible from the rear of the machine with the use of extensions. Also, access can be gained by reaching in from the sides over the tires and under the fuel tanks.

3. Three holes are provided on each side. Use the Upper hole and one of the other two remaining holes that is easily accessible. Install the retaining nuts, but do not tighten.

4. Install the upper ROPS section onto the lower ROPS "posts". Install the (½-13 x 3.25) HHCS bolts, nuts and washers. See Fig. 3-3.

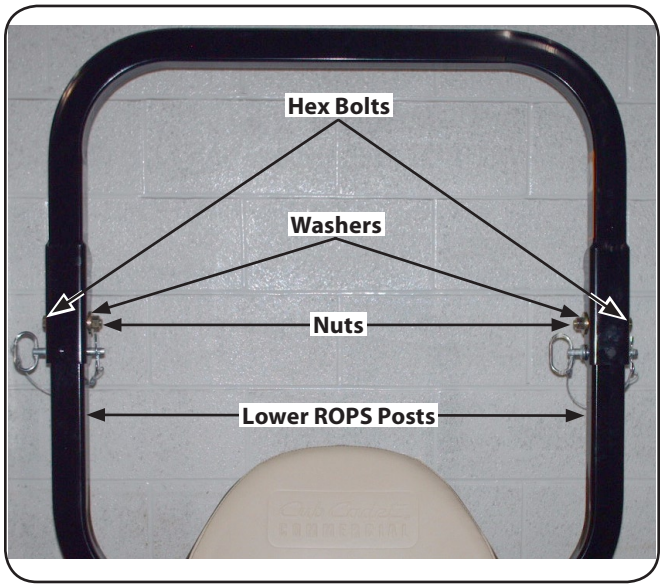

Figure 3-3

5. Tighten Upper ROPS section bolts after both RH & LH hardware is installed.
6. Tighten the frame mounting hardware to 80-90 lb.-ft. torque. See Fig. 3-2.

   NOTE: Make sure tubular upright posts are absolutely tight within welded bracket.
7. Insert rubber plugs into each side of the upper ROPS. See Fig. 3-4.

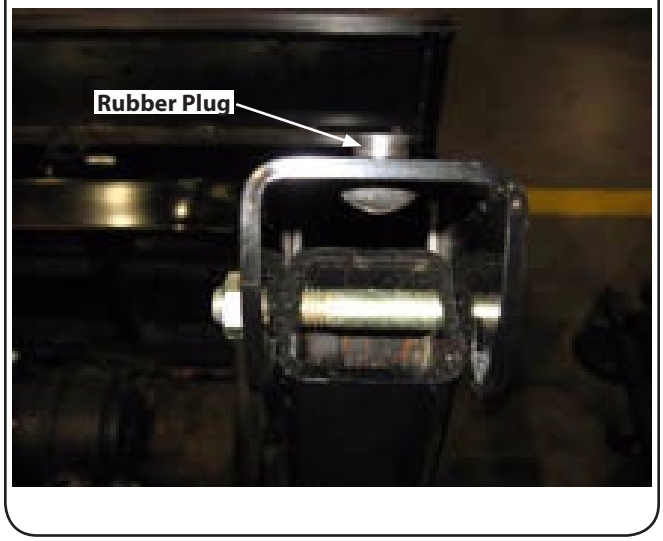

Figure 3-4

8. Move the upper ROPS section to the upright position, and insert the locking pins with their retainer hairpin clips. See Fig. 3-5.

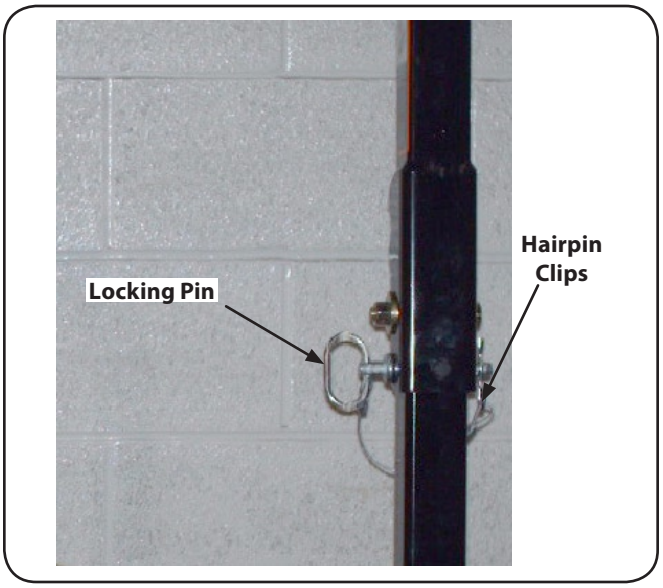

Figure 3-5

Position Drive Control levers

The drive control levers of the tractor are lowered for shipping purposes. Using the hardware found in the manual bag, the control levers must be repositioned to operate the tractor. To reposition the control levers for operation, proceed as follows:

1. Lift and swing the control levers up into the operating position.
2. From the outside, insert the bolts through the hourglass spacers and the holes of the pivot bracket. Secure with the flange lock nuts. See Fig. 3-6.

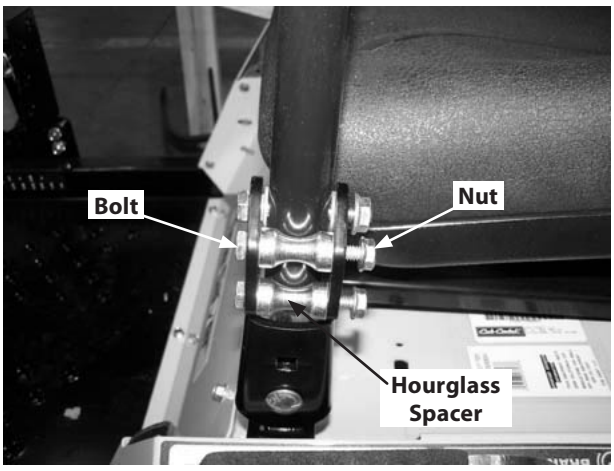

Figure 3-6

3. Refer to "Adjusting Drive Control Levers" section for instructions on the final adjustment of the levers.

Adjusting Drive Control Levers

The RH and LH drive control levers can be adjusted up or down and fore-and-aft for the comfort of the operator. Proper drive control lever and seat adjustment will result in the following:

In the neutral position with hands on the control levers,

- Operator's upper arms should be relaxed and approximately vertical.
- Operator's forearms should be approximately horizontal.

In the full forward position,

- Operator's back should stay in contact with the seat back.
- Control levers should not contact operator's legs.

In the full reverse position,

- Control levers should not contact the operator's legs or torso.

Set the seat to the preferred operating position.

- Adjustment lever is located under the front edge of the seat.
- The seat has five inches of front-to-rear adjustment available.

Check factory settings of control levers for the conditions listed above.

NOTE: If control lever adjustments are required, height adjustments should be made prior to angular adjustments.

To adjust the height of the drive control levers:

1. Remove the nuts from the control lever mounting bolts. See Fig. 3-7.

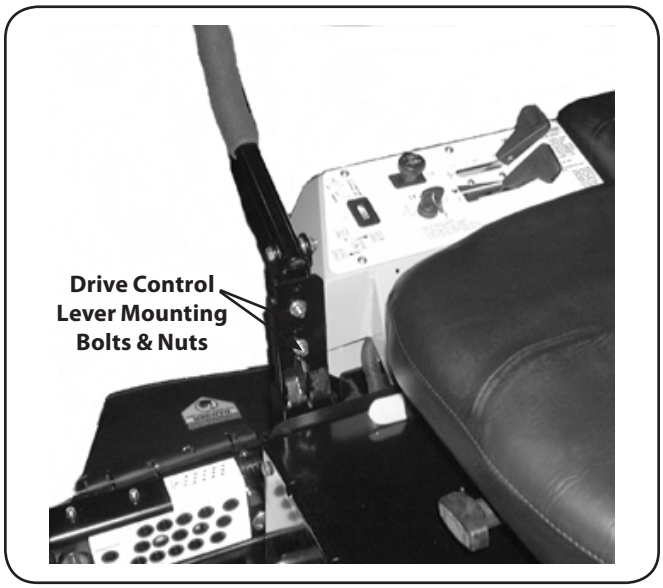

Figure 3-7

2. Remove the bolts and control lever and reposition to the second set of holes in the mounting block.
3. Reinstall the bolts and nuts, and tighten to 28-34 ft-lbs.
4. If angular adjustments are also required, nuts can be tightened until snug at this point.

The same adjustments should be made to both sides of the mower.

To adjust the front-to-rear angle of the control levers:

1. Loosen the nuts on the control lever mounting bolts, leaving the bottom one fairly snug. The top hole is slotted, allowing the control lever to pivot on the bottom bolt.
2. Move control lever to the desired angle and tighten the nuts to 28-34 ft-lbs.

   NOTE: In the neutral position, the handles of the control levers should be aligned with approximately a one inch gap between the tips. Widen the gap by adding shim washers to the top mounting bolt between the lap bar and the mounting block.
3. Check the results of any adjustments to the conditions described above. Repeat any adjustment procedures as required until all conditions are met.

Suspension Seat

1. This unit is equipped with an adjustable suspension seat system, which includes a fold-forward seat with retractable seat belt assembly, a low profile mechanical suspension, and an Operator Presence Sensor (OPS).
2. The seat bottom is covered with a heavy-duty vinyl fabric and integrates the EVC cushion comfort system that provides up to 1-⅜" dampered (for shock isolation) suspension travel. An OPS in the form of a switch, is integrated into the seat bottom and is connected to the machine electrical system. The seat back is also covered with a heavy-duty vinyl fabric, it adjusts to recline up to 16 degrees, and it will fold forward for transport or protection from the elements of weather (lever actuated on operator's left side). The armrests are adjustable for operator comfort (knob inside armrests actuated from the bottom). Roller bearing single-locking tracks provide easy repositioning fore/aft up to 5" (lever actuated on lower right).
3. A mechanical suspension mechanism incorporates weight/ride adjustment controls for operators in the 125 to 275 lb. weight range (turn the knob on the front of the seat clockwise to increase the weight capacity and counter-clockwise to decrease. Self-lubricating bearings are utilized throughout the suspension mechanism that provides an additional 2" of suspension travel.
4. A retractable seat belt assembly with inertia-lock is attached to the "ride" portion of the seat frame. The seat frame is attached to the mechanical suspension, which is attached to the roller tracks that are bolted to the seat base in one of the three (3) locations - the seat assembly can be detached and re-installed 1" forward or 1" aft from the factory installed position.
5. When the seat latch is released, the complete seat assembly and seat base can be pivoted forward onto the foot platform - this provides access to the battery, hydraulic reservoir and filter, as well as some of the electrical system and control linkages. The seat base must be secured with the latch prior to machine operation.

NOTE: The seat base must be secured by the latch, otherwise, the seat assembly could tilt forward. The Operator Presence Sensor must be connected to the electrical wiring harness.

Connecting the Battery Cables

CALIFORNIA PROPOSITION 65 WARNING!
Battery posts, terminals, and related accessories contain lead and lead compounds, chemicals known to the State of California to cause cancer and reproductive harm. Wash hands after handling.

CAUTION! When attaching battery cables, always connect the POSITIVE (Red) wire to its terminal first, followed by the NEGATIVE (Black) wire.

For shipping reasons, both battery cables on your equipment may have been left disconnected from the terminals at the factory. To connect the battery cables, proceed as follows:

NOTE: The positive battery terminal is marked Pos. (+). The negative battery terminal is marked Neg. (–).

NOTE: If the positive battery cable is already attached, skip ahead to step 2.

1. Remove the plastic cover, if present, from the positive battery terminal and attach the red cable to the positive battery terminal (+) with the bolt and hex nut. See Fig. 3-8.

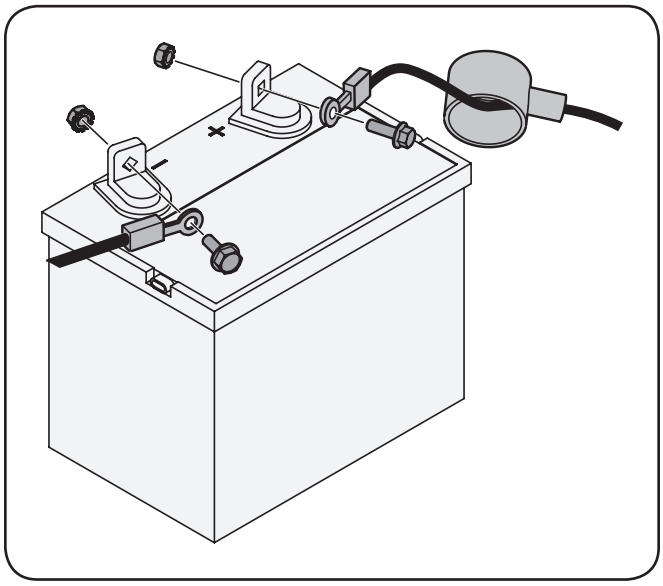

Figure 3-8

2. Remove the plastic cover, if present, from the negative battery terminal and attach the black cable to the negative battery terminal (–) with the bolt and hex nut. See Fig. 3-8.
3. Position the red rubber boot over the positive battery terminal to help protect it from corrosion.

NOTE: If the battery is put into service after the date shown on top/side of battery, charge the battery as instructed in the Maintenance section your Operator's Manual prior to operating the tractor.

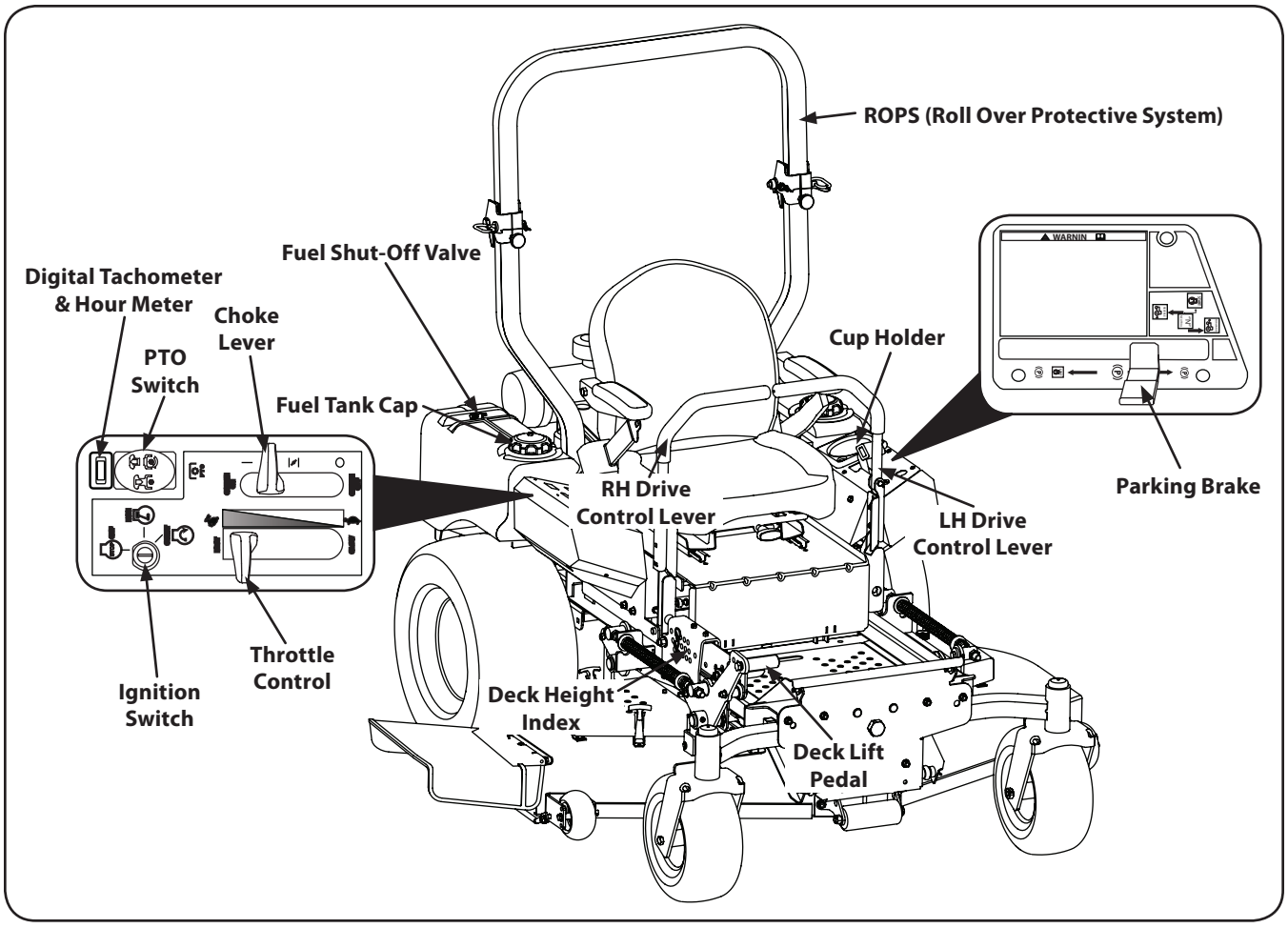

Figure 4-1

NOTE: References to LEFT, RIGHT, FRONT, and REAR indicate that position on the tractor when facing forward while seated in the operator's seat.

Deck Height Index

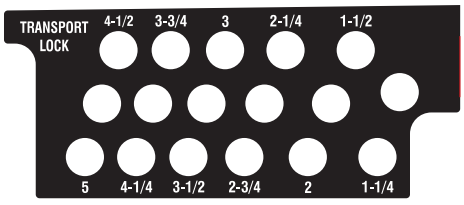

The deck height index consists of several holes located on the front/right of the foot platform. Each hole corresponds to a ½" change in the deck height position ranging from 1" at the lowest notch to 4" at the highest notch.

Cup Holder

The cup holder is located toward the rear of the LH console to the left of the operator's seat.

Deck Lift Pedal

The deck lift pedal is located on the right front corner of the foot platform, and is used to raise and lower the mower deck.

To raise the mowing deck to the transport position, push the upper part of the pedal all the way forward and place the clevis pin in furthest hole from you and secure with the cotter pin. To lower the deck, remove the clevis pin and reinsert it in the desired cutting height and secure with cotter pin.

RH and LH Drive Control Levers

The RH and LH control levers are located on each side of the operator's seat. These hinged levers pivot outward to open space to permit the operator to either sit in the tractor seat, or to dismount the tractor. The levers must be fully opened out and in the neutral position to start the tractor engine.

Each lever controls the respective RH or LH transmission. Consequently, these levers control all of the movements of the tractor. Driving and steering utilizing these control levers is quite different from conventional tractors, and will take some practice to master. Refer to Operation for instructions on using the control levers.

Ignition Switch

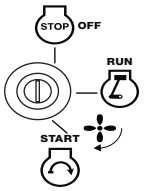

The ignition switch is located on the RH console to the right of the operator's seat. The ignition switch has three positions as follows:

OFF - The engine and electrical system is turned off.

RUN - The tractor electrical system is energized.

START - The starter motor will turn over the engine. Release the key immediately when the engine starts

NOTE: To prevent accidental starting and/or battery discharge, remove the key from the ignition switch when the tractor is not in use.

Power Take-Off (PTO) Switch

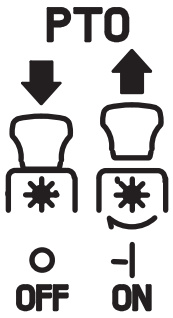

The PTO switch is located on the RH console to the right of the operator's seat next to the ignition switch.

The PTO switch operates the electric PTO clutch mounted on the bottom of the engine crankshaft. Pull the switch knob upward to engage the PTO clutch, or push the knob downward to disengage the clutch.

The PTO switch must be in the "disengaged" position when starting the engine.

Digital Tachometer and Hour Meter

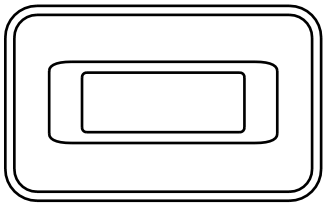

The tachometer/hour meter panel is located on the RH console to the right of the operator's seat. The hour meter records the hours that the tractor has been operated in the digital display. The tachometer provides engine speed (RPM), and service reminders (oil, lube) in the digital display.

The tachometer/hour meter is activated whenever the ignition switch is turned to the "ON" position. Keep a record of the actual hours of operation to assure all maintenance procedures are completed according to the instructions in this manual and the engine manual.

Throttle Control



The throttle control is located on the RH console to the right of the operator's seat. When set in a given position, a uniform engine speed will be maintained. The trottle control moves between the fast and slow positions.

Push the throttle control handle forward to increase the engine speed. The tractor is designed to operate with the throttle control in the fast position (full throttle) when the tractor is being driven and the mower deck is engaged.

Pull the throttle control handle rearward to decrease the engine speed.

Choke Lever



The Choke lever is located on the right side of the mower next to the operator's seat. The Choke is operated manually when the lever is moved forward past the detent. Having the Choke in the ON ━ position helps the engine to start during initial start-up. During normal operation the Choke should be OFF O.

Parking Brake Engagement Lever



The parking brake engagement lever is located on the LH console to the left of the operator's seat., and when pulled to the rear, engages the parking brake.

NOTE: If the LH and RH drive control levers are not fully opened out in the neutral position when engaging the parking brake, the engine will stop. The parking brake must be placed in the engaged position when starting the tractor engine.

Fuel Tank Cap

The fuel tank cap is located on top of the fuel tank(s). Turn the fill cap approximately ¼ turn and pull upward to remove. Do not attempt to remove the cap from the tractor.

Push the cap downward on the fuel tank fill neck and turn approximately ¼ turn clockwise to tighten. Always re-install the fuel cap tightly onto the fuel tank after removing.

WARNING! Never fill the fuel tank when the engine is running. If the engine is hot from recently running, allow to cool for several minutes before refueling. Highly flammable gasoline could splash onto the engine and cause a fire.

Fuel Shut-Off Valve

The fuel shut-off valve is located on top of the fuel tank(s). When turned in a clockwise direction until it stops, it will shut off the flow of fuel to the engine. When turned in a counterclockwise direction it will open and allow fuel to flow to the engine. See Fig. 4-2.

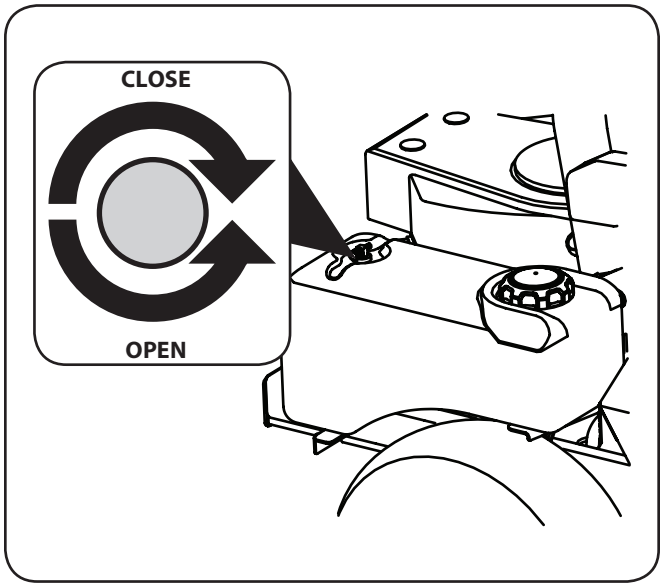

Figure 4-2

NOTE: Close this valve if you are not going to run the mower for a period of 30 minutes or more to prevent flooding the engine.

Seat Adjustment Lever (Not Shown)

The seat adjustment lever is located below the front/left of the seat. The lever allows for adjustment of the fore to aft position of the operator's seat. Refer to the Maintenance & Adjustments section for instructions on adjusting the seat position.

Roll Over Protective System (ROPS)

The roll-over protection system is an integral part of you zero-turn tractor. It is designed to create a crush-resistant space for the operator in the event of a roll-over.

DANGER! The Roll Over Protection System should not be tampered with, modified or removed. If the system is damaged, it must be replaced prior to operator use. Failure to us the Roll Over Protection System and seat belt properly could result in serious injury or death.

Transmission Bypass Valves (Not Shown)

The transmission bypass valves (one for each the RH and LH transmission) are located just in front of the engine and just behind the seat.

When engaged, the two valves open a bypass within the hydrostatic transmissions, which allows the tractor to be pushed short distances by hand. Refer to the Maintenance & Adjustments section for instructions on using the bypass feature.

CAUTION: Never tow your tractor. Towing the tractor with the rear wheels on the ground may cause severe damage to the transmissions.

Hydrostatic Pumps and Motors

The pumps are located behind the seat and are the hardest-working components in the hydraulic system. They are in operation all the time the engine is running. The pumps and motors serve as the sytem that propels the tractor's drive system.

Front Skirts

The front skirts are located on the front of the deck and help lift the grass for precision cutting or can be raised to allow for the cutting of large volumes of grass. See the Maintenance & Adjustments section for more information on adjusting the front skirt.

LOW
MED
HIGH

Operation

5

General Safety

- RECEIVE INSTRUCTION — Entirely read this operator's manual. Learn to operate this machine SAFELY. Do not risk INJURY or DEATH. Allow only those who have become competent in its usage to operate this tractor.
- Before starting the engine or beginning operation, be familiar with the controls. The operator should be in the operator's seat. The PTO switch must be in the disengaged position, the parking brake engaged, and the RH and LH drive control levers moved fully outward in the neutral position.
- Keep all shields in place. Keep away from moving parts.
- NO RIDERS! Keep all people and pets a safe distance away. Look behind and down to both sides of the tractor before and while backing up.
- DO NOT direct the mower discharge at people. Never walk or stand on the discharge side of the mower when the engine is running. Turn off the PTO if another person approaches while you are operating the mower.
- Avoid slopes where possible. Never operate on slopes greater than 15°. Slopes with a greater incline present dangerous operating conditions. Tractors can be rolled over. Always mow across slopes, never up and down the slope. Avoid turning downhill if possible, start at the bottom and work up to the top. Use extra care and go slowly when turning downhill. Control the speed and direction of the zero turn machine "primarily" with the speed/directional control (lap bar) of the downhill side of the machine, i.e., maintain the uphill side lap bar "essentially" in a fixed position.
- Before leaving the operator's seat: Shut off the PTO, move the RH and LH drive control levers fully outward in the neutral position, engage the parking brake, shut off the engine and remove the ignition key. Wait for all movement to stop before servicing or cleaning.
- When operating this mower, in the forward direction, do not allow the steering levers to return to neutral on their own. Operate the drive control levers smoothly and avoid any sudden movements of the levers when starting and stopping. Keep a firm grip on the control levers.
- Be careful when operating near gravel paths and roadways. Stop the blades and tractor motion and wait for vehicles to pass before operating along the road.
- Do not operate the tractor with the mower deck removed. Removal of the deck will change the balance of the tractor, and could contribute to a tractor rollover.
- Avoid operation on traction surfaces that are unstable; use extreme caution if the surface is slippery. Always remove debris and other objects from the area to be mowed - debris and loose grass will reduce traction.
- Mow only in daylight or good artificial light.
- Watch for holes, sprinkler heads, and other hidden hazards.
- Avoid driving too close to trees, creeks, ditches, sand traps, and other obstacles.
- Slow down before turning and come to a complete stop before any zero turn maneuver.
- If you hit a solid object while mowing, turn off the PTO, place the steering levers in the neutral, opened-out position, move the throttle to slow, set the parking brake, shut off the engine, and take the key from the ignition switch. Inspect for damage. Repair the damage. Make sure the blades are in good condition and that the blade bolts are tight before restarting the engine.
- Do not stop the tractor or park the tractor over combustible materials such as dry grass, leaves, debris, etc.
- Keep the mower and especially the engine and hydraulic components clean and free of grease, grass, and leaves to reduce the chance of fire and permit proper cooling.
- Do not fill the fuel tank when the engine is running or while the engine is hot. Allow the engine several minutes to cool before refueling. Tighten the fuel cap securely.

Before Operating Your Tractor

1. Before you operate the tractor, study this manual carefully to familiarize yourself with the operation of all the instruments and controls. It has been prepared to help you operate and maintain your tractor efficiently.
2. Fill the fuel tank with only clean, fresh, unleaded gasoline with a pump sticker octane rating of 87 or higher. When the fuel reaches one inch from the top of the tank, stop. DO NOT OVERFILL. Space must be left for expansion.
3. Check the engine oil level. Pull out the oil dipstick, wipe it off and reinsert it. Pull it out again and read the oil level. If it is below the operating range, add oil through the fill tube using a funnel to bring it up to the top of the operating range.
4. Check the hydraulic oil level. The hydraulic oil tank is located beneath the operator's seat. Always wipe off the area around the oil tank fill neck before checking the oil level to prevent dirt from contaminating the oil. Remove the cap and make sure the oil level is a 1/4" below the oil tank fill neck. If the oil level is low, fill with Shell Rimula 15W40 or equivalent oil. Equivalent oil should meet GM Allison C-4.
5. Check the tire inflation pressures - 8-10 psi for the rear tires, 20-25 psi front caster tires.

   NOTE: New tires are overinflated in order to properly seat the bead to the rim.
6. Check that all nuts, bolts and screws are tight.
7. Check the tension of the deck drive belts.
   a. Remove the deck cover
   b. The tension of the deck drive belts are maintained by a spring mechanism that adjusts for wear and stretch.

c. Examine the belts for cuts, fraying, and excessive wear. Replace if any of these are detected.

d. Replace the deck cover.

8. Check if deck is level. When correctly adjusted the mower deck should be level side to side, and the front of the deck should be approximately ¼" lower than the rear of deck. If deck needs to be leveled, refer to the Maintenance & Adjustments section.
9. Lubricate all pivot points listed in the Maintenance & Adjustments section.
10. Adjust the seat for operator's maximum comfort, visibility and for maintaining complete control of the tractor.

Safety Interlock System

This tractor is equipped with a safety interlock system for the protection of the operator. If the interlock system should ever malfunction, do not operate the tractor. Contact your authorized Cub Cadet Dealer.

- The safety interlock system prevents the engine from cranking or starting unless the RH and LH drive control levers are moved fully outward in the neutral position, the parking brake is engaged, and the PTO is disengaged.
- To avoid sudden movement when disengaging the parking brake, the safety interlock system will shut off the engine if the RH and/or LH drive control levers are moved to a position other than the fully out in the neutral position when the parking brake is engaged.
- The safety interlock system will shut off the engine if the operator leaves the seat before engaging the parking brake.
- The safety interlock system will shut off the engine if the operator leaves the seat with the PTO engaged, regardless of whether the parking brake is engaged.

  NOTE: The PTO switch must be moved to the "OFF" position to restart the engine.
- The safety interlock system will shut off the PTO and the mower blades will stop if both drive control levers are moved into the reverse position. The PTO will re-engage when one or both of the levers are moved back to the neutral or forward position.

Starting the Engine



WARNING! This tractor is equipped with a safety interlock system designed for the protection of the operator. Do not operate the tractor if any part of the interlock system is malfunctioning. Periodically check the functions of the interlock system for proper operation.



WARNING! For personal safety, the operator must be sitting in the tractor seat when starting the engine.

1. Open the fuel shut-off valve.
2. Operator must be sitting in the tractor seat with both drive control levers in the neutral/start position.
3. Engage the parking brake.
4. Make certain the PTO switch is in the disengaged (down) position.
5. Push the choke lever to the on position.

   NOTE: If the engine is warmed up, it may not be necessary to choke the engine.
6. Push the throttle control forward about halfway.
7. Turn the ignition key clockwise to the "START" position and release it as soon as the engine starts; however, do not crank the engine continuously for more than 10 seconds at a time. If the engine does not start within this time, turn the key to "OFF" and wait at least 30 seconds to allow the engine's starter motor to cool. Try again after waiting. If after a few attempts the engine fails to start, do not keep trying to start it with the choke closed as this will cause flooding and make starting more difficult.
8. Once the engine starts, push the choke on halfway and as the engine warms, push the choke off all the way.

Cold Weather Starting

When starting the engine at temperatures near or below freezing, ensure the correct viscosity motor oil is used in the engine and the battery is fully charged. Start the engine as follows:

1. Be sure the battery is in good condition. A warm battery has much more starting capacity than a cold battery.
2. Use fresh winter grade fuel. Winter grade gasoline has higher volatility to improve starting. Do not use gasoline left over from summer.
3. Follow the previous instruction for Starting the Engine.

Using Jumper Cables To Start Engine



WARNING! Batteries contain sulfuric acid and produce explosive gasses. Make certain the area is well ventilated, wear gloves and eye protection, and avoid sparks or flames near the battery.

If the battery charge is not sufficient to crank the engine, recharge the battery. If a battery charger is unavailable and the tractor must be started, the aid of a booster battery will be necessary. Connect the booster battery as follows:

1. Connect the end of one cable to the disabled tractor battery's positive terminal; then connect the other end of that cable to the booster battery's positive terminal.
2. Connect one end of the other cable to the booster battery's negative terminal; then connect the other end of that cable to the frame of the disabled tractor, as far from the battery as possible.
3. Start the disabled tractor following the normal starting instructions previously provided; then disconnect the jumper cables in the exact reverse order of their connection.
4. Have the tractor's electrical system checked and repaired as soon as possible to eliminate the need for jump starting.

Stopping the Engine

1. Place the PTO switch in the "OFF" position.
2. Move the RH and LH drive control levers fully outward in the neutral position.
3. Engage the parking brake.
4. Move the throttle control to midway between the SLOW and FAST positions.
5. Turn the ignition key to the "OFF" position and remove the key from the ignition switch.

NOTE: Always remove the key from the ignition switch to prevent accidental starting or battery discharge if the equipment is left unattended.

Practice Operation (Initial Use)

Operating a zero-turn tractor is not like operating a conventional type riding tractor. Although and because a zero turn tractor is more maneuverable, getting used to operating the control levers takes some practice.

We strongly recommend that you locate a reasonably large, level and open "practice area" where there are no obstructions, pedestrians, or animals. You should practice operating the tractor for a minimum of 30 minutes.

Carefully move (or have moved) the tractor to the practice area. When performing the practice session, the PTO should not be engaged. While practicing, operate the tractor at approximately ½-¾ throttle and at less than full speed in both forward and reverse.

Use protective equipment for eyes, hands, hearing, feet, legs, head and other areas of the body if needed — safety eye glasses, gloves, earplugs, boots, hats, etc.

WARNING! Hearing Protection is required for all operator exposure exceeding two (2) hours.

Carefully practice maneuvering the tractor using the instructions in the following section "Driving the Tractor." Practice until you are confident that you can safely operate the tractor.

Driving the Tractor

WARNING! Avoid sudden starts, excessive speed and sudden stops.

1. Adjust the operator's seat to the most comfortable position that allows you to operate the controls. See seat adjustment in the Maintenance & Adjustments section.
2. Release the parking brake.
3. Move the RH and LH drive control levers inward in the neutral position. Refer to Figure 5-2.

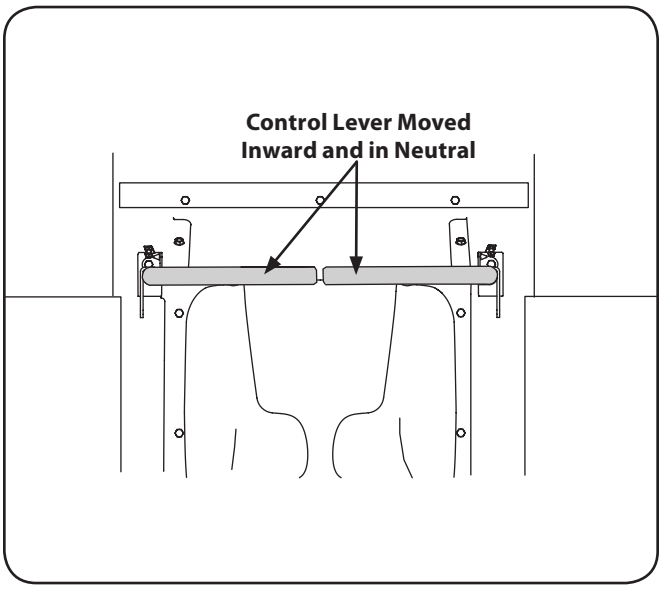

Figure 5-1

NOTE: If the control levers are not even in the neutral position, refer to Maintenance & Adjustments for instructions to adjust the levers so that they are even.

4. Move the throttle control lever forward to the full throttle position.

   NOTE: Although the tractor's engine is designed to run at full throttle, when performing a practice session the tractor must be operated at less than full throttle. This only applies to practice.

WARNING! Always maintain a firm grip on the control levers. DO NOT release the control levers to slow or stop the tractor; move levers to neutral position using your hands.

5. To drive the tractor, firmly grasp the respective drive control levers with your right and left hands and continue with Driving the Tractor Forward on the following page.

Driving the Tractor Forward

WARNING! Keep all movement of the drive control levers slow and smooth. Abrupt movement of the control levers can affect the stability of the tractor and could cause the tractor to flip over, which may result in serious injury or death to the operator.

1. Slowly and evenly move both drive control levers forward. The tractor will start to move forward. See Fig. 5-3.

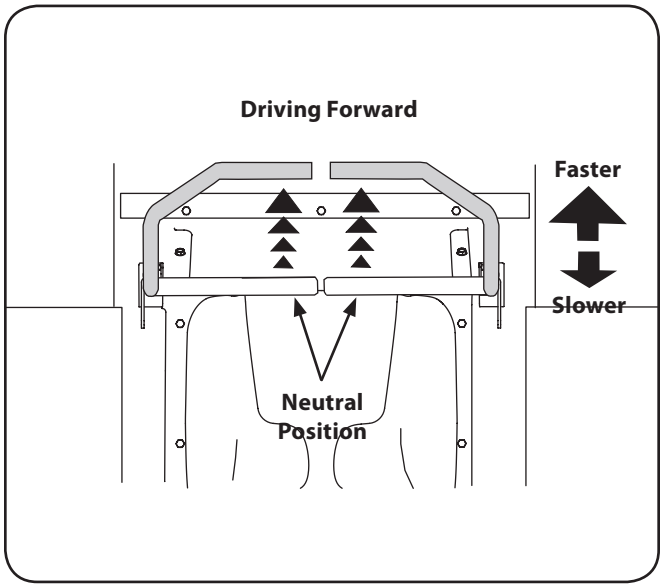

Figure 5-2

2. As the control levers are pushed farther forward the speed of the tractor will increase.
3. To slow the tractor move the controls lever rearward to attain the desired speed, or move the levers to the neutral position to stop the tractor.

WARNING! Always maintain your grasp on the drive control levers. Do not release the levers to slow the tractor or to return to neutral.

Turning the Tractor While Driving Forward

WARNING! When reversing the direction of travel, we recommend performing gradual 'U' turns where possible. Sharper turns increase the possibility of turf defacement, and could affect control of the tractor. ALWAYS slow the tractor before making sharp turns.

To turn the tractor while driving forward, move the control levers as necessary so that one lever is rearward of the other. The tractor will turn in the direction of the rearward control lever.

1. To turn to the left, move the left drive control lever rearward of the right lever. See Fig. 5-4.

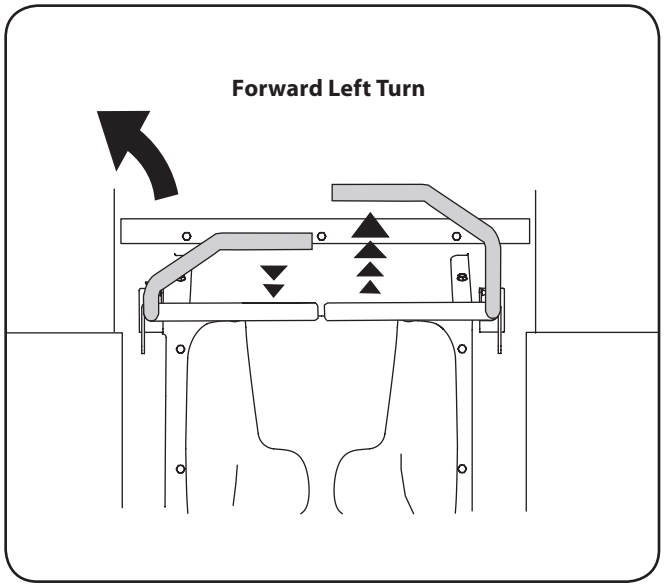

Figure 5-3

2. To turn to the right, move the right drive control lever rearward of the left lever. See Fig. 5-5.

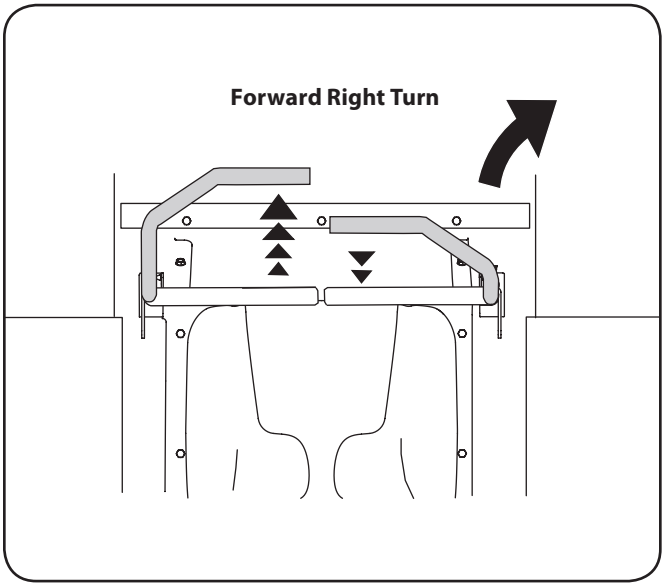

Figure 5-4

3. The greater the fore-to-aft distance between the two levers, the sharper the tractor will turn.
4. To execute a "pivot turn," move the turn side drive control lever to the neutral position, while moving the other control lever forward.

   NOTE: Making a "pivot turn" on grass will greatly increase the potential for defacement of the turf.

Driving the Tractor In Reverse

WARNING! Always look behind and down on both sides of the tractor before backing up. Always look behind while traveling in the reverse direction.

1. Slowly and evenly move both drive control levers rearward. The tractor will start to move in the reverse direction. See Fig. 5-6.

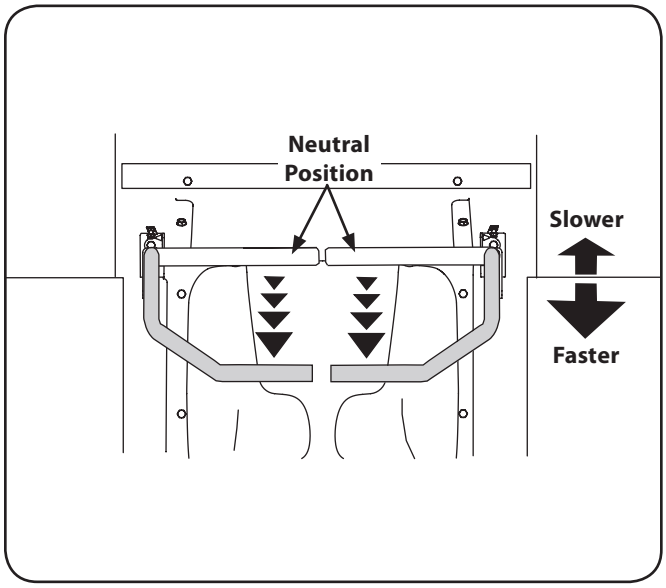

Figure 5-5

2. As the control levers are pushed farther rearward the speed of the tractor will increase.
3. To slow the tractor move the controls lever forward to attain the desired speed, or move the levers to the neutral position to stop the tractor.

Turning While Driving Rearward

To turn the tractor while driving rearward, move the control levers as necessary so that one lever is forward of the other. The tractor will turn in the direction of the forward control lever.

1. To turn to the left while traveling in reverse, move the left drive control lever forward of the right lever. See Fig. 5-7.

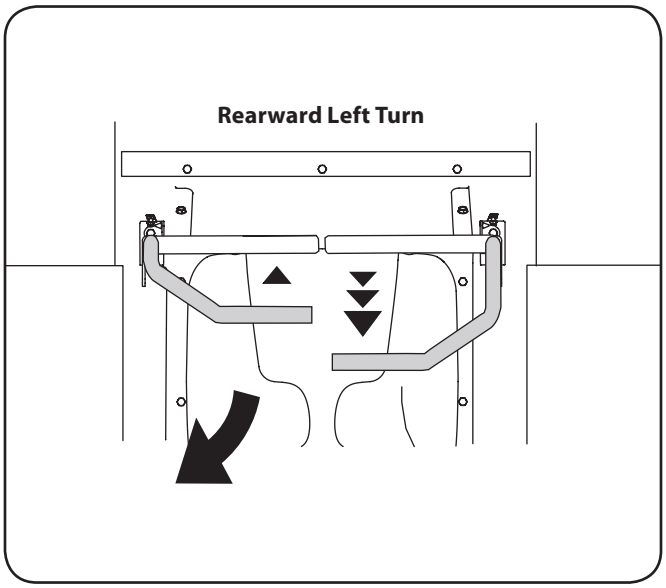

Figure 5-6

2. To turn to the right while traveling in reverse, move the right drive control lever forward of the left lever. See Fig. 5-8.

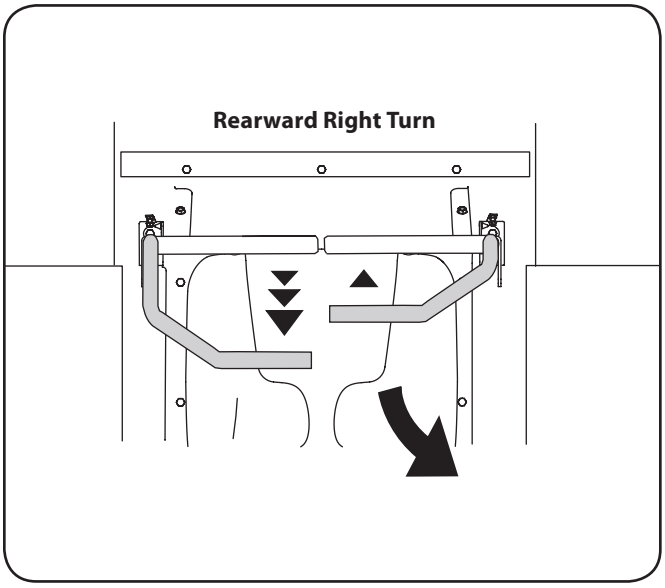

Figure 5-7

3. The greater the fore-to-aft distance between the two levers, the sharper the tractor will turn.
4. To execute a "pivot turn," move the turn side drive control lever to the neutral position, while moving the other control lever rearward.

   NOTE: Making a "pivot turn" on grass will greatly increase the potential for defacement of the turf.

Executing a Zero Turn

WARNING! When executing a zero turn, the tractor MUST BE STOPPED. Executing a zero turn while the tractor is moving can significantly reduce your control of the tractor and will cause severe turf defacement to occur.

1. Stop the forward or reverse motion of the tractor by moving the two drive control levers to neutral.
2. To turn clockwise, move the left control lever forward while simultaneously moving the right control lever rearward. See Fig. 5-9.

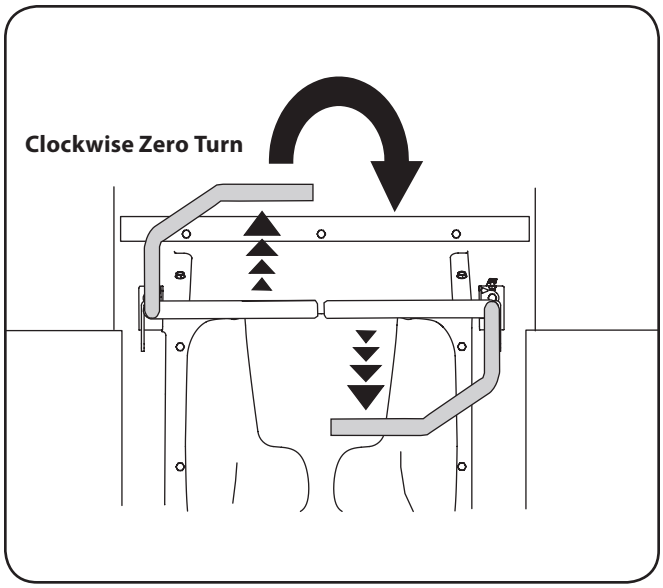

Figure 5-8

3. To turn counterclockwise, move the right control lever forward while simultaneously moving the left control lever rearward. See Fig. 5-10.

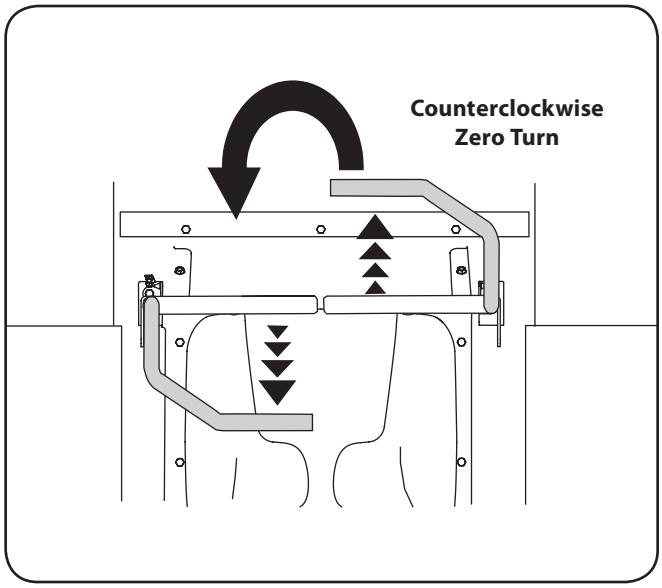

Figure 5-9

Stopping the Tractor

1. Move both drive control levers to the neutral position to stop the motion of the tractor.
2. Push the PTO switch downward to the disengaged position.
3. Use the deck lift pedal to raise the deck to its highest position.
4. If dismounting the tractor, move the drive control handles fully outward in the neutral position, engage the parking brake, move the throttle control lever to the fast position, turn the ignition switch to "OFF'" and remove the key from the switch.

WARNING! Do not leave the seat of the tractor without disengaging the PTO, moving drive control levers fully outward in the neutral position, and engaging the parking brake. If leaving the tractor unattended, turn the ignition key off and remove key.

Driving On Slopes

Refer to the slope gauge in the Safe Operation Section to help determine slopes where you may not operate safely.

WARNING! Do not operate on inclines with a slope in excess of 15 degrees (a rise of approximately 2-½ feet every 10 feet). The tractor could overturn and cause serious injury.

1. Always drive across slopes, never up and down. Control the speed and direction of the tractor using primarily the control lever on the downhill side of the tractor, with the uphill control lever remaining essentially in a fixed position.
2. Avoid turning downhill if possible. Start at the bottom of a slope and work upward. Always slow down before turning.
3. Use extra care and go slowly when turning downhill.

Operating The PTO

Operate the PTO clutch as follows:

1. Move the throttle control lever to approximately the mid throttle position.
2. Pull the PTO switch upward to the "ENGAGED" position.
3. Advance the throttle lever to the operating speed (full engine speed).
4. The operator must remain in the tractor seat at all times. If the operator should leave the seat without turning off the power take-off switch, the tractor's engine will shut off.

Using the Mower Deck



WARNING! Make certain the area to be mowed is free of debris, sticks, stones, wire or other objects that can be thrown by the rotating blades.

NOTE: Do not engage the mower deck when lowered in grass. Premature wear and possible failure of the 'V" belt and PTO clutch will result. Fully raise the deck or move to a non grassy area before engaging the mower deck.

1. Mow across slopes, not up and down. If mowing a slope, start at bottom and work upward to ensure turns are made uphill.
2. On the first pass pick a point on the opposite side of the area to be mowed.
3. Engage the PTO clutch using the PTO switch and move the throttle control to the fast position.
4. Lower the mower deck to the desired height setting using the deck lift pedal.
5. Slowly and evenly push the RH and LH drive control levers forward to move the tractor forward, and keep the tractor headed directly toward the alignment point.

   NOTE: The speed of the tractor will affect the quality of the mower cut. Mowing at full speed will adversely affect the cut quality. Control the ground speed with the control levers.
6. When approaching the other end of the strip, slow down or stop before turning. A U-turn is recommended unless a pivot or zero turn is required.
7. Align the mower with an edge of the mowed strip and overlap approximately 3".
8. Direct the tractor on each subsequent strip to align with a previously cut strip.
9. To prevent rutting or grooving of the turf, if possible, change the direction that the strips are mowed by approximately 45° for the next and each subsequent mowing.



WARNING! Be careful when crossing gravel paths or driveways. Disengage the PTO and raise the deck to the highest position before crossing.

NOTE: When stopping the tractor for any reason while on a grass surface, always:

- Place the shift lever in neutral,
- Engage the parking brake,
- Shut engine off and remove the key.
- Doing so will minimize the possibility of having your lawn ''browned'' by hot exhaust from your tractor's running engine.

Checking the Safety Interlock Circuits

Periodically check the safety interlock circuits to ensure they are working properly. If a safety circuit is not working as designed, contact you Cub Cadet dealer to have the tractor inspected. DO NOT operate the tractor if any safety circuit is not functioning properly. To check the safety circuits, proceed as follows:

1. Sitting in the tractor seat with both drive control levers opened fully outward, disengage the parking brake and momentarily turn the ignition switch to the start position. The engine should not crank.
2. Engage the parking brake and pull the PTO switch upward to the engaged position. Momentarily turn the ignition switch to the start position; the engine should not crank.
3. Push the PTO switch downward to the disengaged position and engage the parking brake. Start the engine and move one of the drive control levers from the fully outward neutral position. The engine should stop running. Repeat the procedure with the opposite control lever.
4. Move both control levers fully outward in the neutral position and disengage the parking brake; then lift upward from the operator's seat. The engine should stop.
5. With both control levers fully outward in the neutral position and the parking brake engaged, engage the PTO. Lift upward from the operator's seat; the engine should stop.

Mower Cutting Blades

The blades normally "factory installed" on a mower afford the best grass cutting performance on the majority of grasses and mowing conditions; however, there will be occasions whereby the grass type, stage of grass growth, soil conditions, and weather conditions will require different cutting blade types. Since the mower decks are designed so that over-lap of the cutting blades generally exceed 1.5", there is no need for orientation of one cutting blade to an adjacent blade (I.E., the blades do not need to be "timed" nor synchronized).

Hi-lift — These are generally the best cutting blades for most grasses and mowing conditions. These blades will provide extra "lift" for the thinner leaf grasses, will handle lush grasses, and will provide maximum grass and debris discharge. These blades are generally required for material collection systems. More horsepower is required for these blades when compared to others, and they generally produce the highest noise levels.

Medium-lift — These blades require less horsepower than the hi-lift, and they generally work well in wider leaf grasses and some mulch applications.

Low-lift — These blades require less horsepower than hi-lift and medium-lift blades, and they generally work best with wide leaf grasses, sparse grass growth, and sandy soil conditions. They generally produce the lowest noise levels. Bahia blades are configured without offset, and with a maximum amount of sharpened cutting edge.

Mulch- These blades are generally designed for use in cutting decks equipped with mulch baffles. The shape of the blade generally produces higher turbulence in order that the grass can be repeatedly cut and re-cut into smaller pieces. These blades generally require more horsepower than other blades. Mulch blades work best when the grasses are cut at the highest levels, minimal lengths of grasses are removed, and grass conditions are generally dry.

NOTE: Refer to the attachment and accessories section for a list of part numbers.

Reconfigurable Mower

	Front Skirt	Inner Baffle	Discharge Baffle	Cutting Blades	Gauge Wheels	Front Roller	Rear Rollers
Standard set-up	Low	Installed	Installed	Hi-lift	Low = 3 to 5″	Low = 3 to 5″	Low = 3 to 5″
Stems (Dandelion, Bahia, Buckhorn, etc.)	Med	Removed	Installed	Hi-lift	High = 1 to 2-½″ Low = 3 to 5″	High = 1 to 2-½″ Low = 3 to 5″	High = 1 to 2-½″ Low = 3 to 5″
Very Lush &/or tall grass	High	Removed	Installed	Hi-lift	High = 1 to 2-½″ Low = 3 to 5″	High = 1 to 2-½″ Low = 3 to 5″	High = 1 to 2-½″ Low = 3 to 5″
Low cut height (1 to 2″)	Med	Installed	Installed	Low-lift	High = 1 to 2-½″	High = 1 to 2-½″	High = 1 to 2-½″
Mulch	Low	Installed	Removed	Hi-lift/ Mulch	High = 1 to 2-½″ Low = 3 to 5″	High = 1 to 2-½″ Low = 3 to 5″	High = 1 to 2-½″ Low = 3 to 5″
Material collection	Low	Installed	Installed	Hi-lift	High = 1 to 2-½″ Low = 3 to 5″	High = 1 to 2-½″ Low = 3 to 5″	High = 1 to 2-½″ Low = 3 to 5″
Abrasive (sandy), dry	Low	Removed	Installed	Low-lift	High = 1 to 2-½″ Low = 3 to 5″	High = 1 to 2-½″ Low = 3 to 5″	High = 1 to 2-½″ Low = 3 to 5″
Wet	Low	Installed	Installed	Hi-lift	High = 1 to 2-½″ Low = 3 to 5″	High = 1 to 2-½″ Low = 3 to 5″	High = 1 to 2-½″ Low = 3 to 5″

Table Notes: This table is a general outline of suggested settings, mowing conditions may vary.

Front Skirts: When the front skirt is set to "low" the grass lift is increased for precision cutting. When the skirt is set to "high" the grass can "rebound" and higher volumes of grass can be cut.

Inner Baffle: The inner baffle regulates grass discharge. Remove the inner baffle for high-volume grass and install the inner baffle for precision cutting.

Discharge Baffle: The discharge baffle enhances the grass discharge pattern. The discharge baffle reduces clumping and should be removed for mulching.

Gauge Wheels: The gauge wheels reduce scalping, help with precison cutting and reduce turf defacement during turns.

Rear Rollers: The rear rollers reduce scalping and gives grass a striped appearance.

Cutting Blades: The cutting blades cut grass, create grass lift and discharge grass through the discharge chute.

Discharge Chute: The discharge chute controls the mower deck discharge and enhances the discharge pattern

NOTE: To avoid damaging grass, no more than ⅓ of the grass height should be removed during a single cutting (i.e. if the grass is 6″ tall, cut it to 4″).

Maintenance & Adjustments

6

Maintenance Schedule

	Before Each use	Every 25 Hours	Every 50 Hours	Every 100 Hours	Every 500 Hours	After Mowing	Yearly
Check Engine Oil/ Gasoline Level	✓						
Check Hydraulic Hoses For Leaks	✓						
Check Tires & Tire Pressure	✓						
Check Deck, Mower And Hydro Drive Belts	✓						
Check Blades And Blade Bolt Tightness	✓						
Check Safety Switches For Proper Operation	✓						
Check Fluid Level In Transaxle Expansion Reservoir	✓						
Check Engine Intake Screen/Cover						✓	
Clean Mower						✓	
Lubricate Wear Points (See Chart)			✓			✓	
Clean And Re-Oil Air Filter		✓					
Grease Three Spindle Bearings		✓					
Replace Air Filter *			✓				
Change Engine Oil† And Replace Oil Filter			✓				
Check Battery's Electrolyte Level			✓				
Clean Engine Cooling Fins & External Surfaces*			✓				
Lubricate All Grease Fittings (See Chart)			✓				
Check Spark Plug Condition & Gap				✓			
Check Air Gap Pto Clutch				✓			
Change Hydrostatic Fluid & Filter In Transaxles †					✓		✓

† After first 5 hours, change engine oil & filter. After first 50 hours, change hydrostatic fluid and filter in transaxles. Change oil every 25 hours under heavy duty operation. * Perform more frequently under dusty conditions.

OIL CHART

Apply a few drops of SAE engine oil, grease, or use a spray lubricant. Apply the oil to both sides of pivot points. Wipe off any excess. Start engine and operate mower briefly to insure that oil spreads evenly.

Number of Oil Points	Description
DAILY	
4	Deck Suspension Pivots
4	Height Adjustment Turnbuckle Clevis Pin
2	Height Adjustment Handle Pivots
2	Height Adjustment Stop Pivots
2	Deck Lift Linkage Pivots
2	Transport Handle Pivots
1	Transport Handle Pin
2	Deck Frame Up-and-Down Pivots
WEEKLY	
1	Seat Hinge
2	Steering Lever Linkage Rod End Bearings
2	Lever Return Assembly Rod End Bearings
2	Pump Control Lever Pivots
1	Brake Lever Pivot Clevis Pin
1	Brake Lever Control Rod Pivot
1	Brake Control Rod Swivel Joint
4	Brake Rod Clevis Pins
2	Brake Shaft Assembly Pivots
2	Grass Collection System Lid Hinges (If Mower is so equipped)

Engine Oil: Rimula 15W40 recommended or 10W40 engine oil rated SJ or higher.

Hydrostatic Fluid: Rimula 15W40 recommended.

Spindle Lubricant: Use only Shell Alvania RL 2 grease. This grease is an amber-colored grease designed for high speed bearing applications. It has a base oil viscosity that reduces running losses, has been formulated for low noise, has excellent corrosion protection, and has excellent bearing lubrication.

General Purpose Lubrication: Use any NLGI grade 2 multi-purpose grease. Shell Albida EP2 is recommended. Shell Albida EP 2 is a red-colored multi-purpose grease designed for heavy-duty bearing applications. It has high base oil viscosity for mechanical stability, has been formulated for high load, low-speed applications, and has excellent lubrication and corrosion protection.

LUBRICATION CHART

Use a grease-gun filled with NO. 2 Multipurpose Lithium Base Grease

Number of Grease Fittings	Description
EVERY 25 HOURS	
3	Blade Spindle Bearings
WEEKLY	
2	Front Caster Wheels
2	Front Caster Wheel Spindles
2	Mower Deck Ball Wheels
Number of Grease Points	Description
WEEKLY	
4	Mowing Deck Pivots
2	Deck Take-Up Idler Pivots
1	Axle Pivot
2	Steering Lever Pivots
1	Hydro Take-up Idler Pivot
1	Park Brake Pivot

Spindle Lubricant: Use only Shell Alvania RL 2 grease. This grease is an amber-colored grease designed for high speed bearing applications. It has a base oil viscosity that reduces running losses, has been formulated for low noise, has excellent corrosion protection, and has excellent bearing lubrication.

General Purpose Lubrication: Use any NLGI grade 2 multi-purpose grease. Shell Albida EP2 is recommended. Shell Albida EP 2 is a red-colored multi-purpose grease designed for heavy-duty bearing applications. It has high base oil viscosity for mechanical stability, has been formulated for high load, low-speed applications, and has excellent lubrication and corrosion protection.

Maintenance

WARNING! Before performing any maintenance or repairs, disengage the PTO, move the drive control levers fully outward in the neutral position, engage the parking brake, stop the engine and remove the key to prevent unintended starting.

Engine

Refer to the Kawasaki Owner's Manual for all engine maintenance intervals, procedures, specifications and instructions.

NOTE: Maintenance, repair, or replacement of the emission control devices and systems which are being done at owner's expense may be performed by any engine repair establishment or individual. **Warranty repairs must be performed by a Cub Cadet Dealer**.

Changing the Engine Oil

WARNING ! If the engine has been recently run, the engine, muffler and surrounding metal surfaces will be hot and can cause burns to the skin. Exercise caution to avoid burns.

Maintain oil level as instructed in engine manual. Change the oil and filter after the first five hours. The oil filter should be changed at every oil change interval. Be careful not to spill oil on any of the belts.

Air Cleaner

Service the pre-cleaner and cartridge/air cleaner element as instructed in the Kawasaki Owner's Manual.

Spark Plug

The spark plugs should be cleaned and the gap reset once a season. Refer to the Kawasaki Owner's Manual for correct plug type and gap specifications.

Hydraulic Oil

WARNING! Never overfill the hydraulic units. Damage can occur if the oil level is not within the proper operating range.

NOTE: When adding hydraulic oil, do so in small quantities and recheck the oil level before adding more. It is important that you do not overfill the reservoir.

Adding Hydraulic Oil (use SAE15W40)

1. Place the Machine on a level surface and engage the parking brake.
2. Stop the engine and remove the key from the ignition switch.
3. Clean the area around the Hydraulic Oil fill neck. See Fig. 6-1.

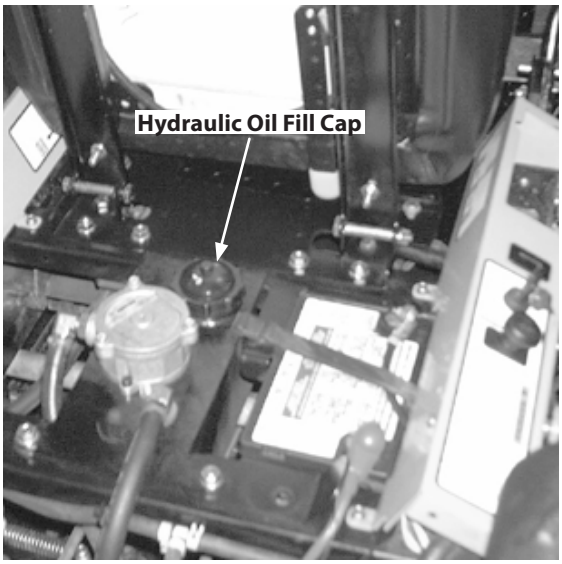

Figure 6-1

4. Remove the hydraulic fill cap and check the level. The correct level is up to the lowest hole of the oil tank fill neck.
5. Pour hydraulic oil into the reservoir up to the lowest hole in the oil tank fill neck, if necessary.

Draining Hydraulic Oil

NOTE: Used hydraulic oil must be disposed of properly. Do not pour it down a drain or sewer, or dump it on open land, this creates an environmental hazard. Please be aware of the environment when disposing of used oil.

1. Place the Machine on a level surface and engage the parking brake.
2. Stop the engine and remove the key from the ignition switch.
3. Raise the seat forward to expose the hydraulic oil fill point.
4. Clean the area around the hydraulic fill oil cap.
5. Remove hydraulic fill oil cap.
6. Place a suitable container (at least 2 gallon) under the hydraulic reservoir and filter.
7. Remove the hydraulic filter to allow hydraulic oil to drain. Remove the drain plug from the bottom of the hydraulic oil tank to drain. Replace the plug.

8. Place a small pan under the pump motor frame. Remove fill oil cap from hydraulic reservoir for faster drainage. Remove nut caps and drain oil from both left and right pumps. Replace and retighten nuts. See Fig. 6-2.

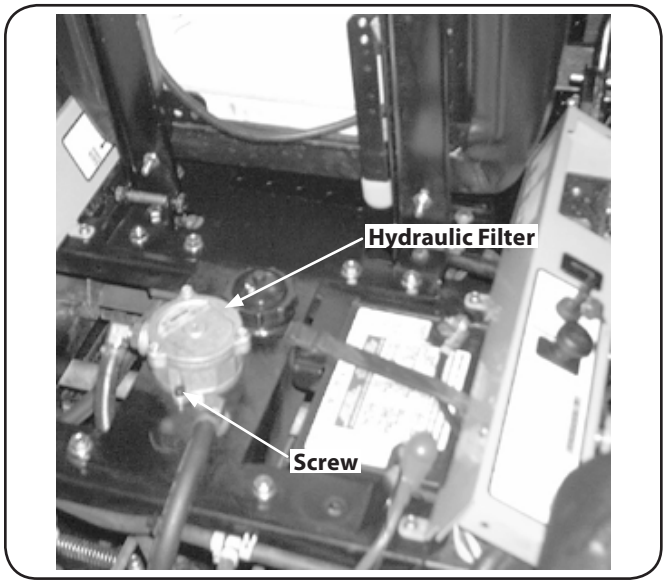

Figure 6-2

9. Remove the three screws from the top of the oil filter and replace the oil filter element. Coat the sealing surface with Shell Rimula 15W40 oil or equivalent. Install the three screws back into the oil filter.
10. Add proper amount of hydraulic oil to reservoir.
11. Run and purge pumps and motors. Check oil level.
12. Add proper amount of hydraulic oil to reservoir and repeat step 11.

Hydraulic System

Hoses

Check the hoses from the hydraulic oil tank to the oil filter to the hydraulic lines daily for leaks or abrasion and replace any damaged hoses. Make certain there are no kinks or twists in any hose. Look for a flattened condition or any leaks and repair or replace as necessary. A flattened or leaking suction hose will permit cavitation to develop which can destroy the pumps in a short time.

Hydraulic Oil Tank and Filter

NOTE: Change the hydraulic oil and the oil filter after the first 50 hours of operation.

To drain the hydraulic oil tank:

1. Place a 2 gallon drain pan under the drain plug on the bottom of the hydraulic oil tank.
2. Remove the drain plug, drain the tank, then replace the plug.
3. Place the drain pan under the filter and remove the filter by unscrewing in a counterclockwise direction. The filter will be full of oil, so empty it into the drain pan. You don't have to drain the rest of the hydraulic system.
4. Fill the replacement filter with a good grade of 15W-40 oil and lubricate the sealing surface.
5. Screw the filter onto the filter base until it seats and then another one-half turn to seal.

   NOTE: Always wipe off the hydraulic tank fill cap and the area around it before removing the cap to prevent dirt from contaminating the oil.
6. Remove the fill cap and fill the tank with the same 15W-40 oil selected for the filter until the oil level is up to the level of the second hole in the fill tube. Leave this air space for expansion.
7. Start the engine and let it run at Lo-idle for about five minutes. Check the filter for leaks. Idling the engine and the pumps in this way will purge any air from the system.
8. Shut off the engine and recheck the oil level in the tank. Top-off if necessary until the oil level is up to the second hole in the fill tube.

   NOTE: After unit is up to operating temperature, turn off engine and re-check hydraulic oil. If oil appears foamy or contains excessive air bubbles, DO NOT OPERATE UNIT. Contact service technician.

Contaminants or foreign matter in the oil will also damage the pumps . To prevent this:

- Use a filter that captures particles as small as 30 microns or 30 millionths of a meter in diameter.
- Be very careful when you remove or repair a component in the hydraulic system. Thoroughly clean off any component before you work on it.
- Plug the ends of any hose or line you remove with a rubber or plastic plug.
- Use plastic caps to seal off the ends of hydraulic fittings.
- Place any component you remove in a clean plastic bag so it can't pick up dust or dirt.
- Clean your hands frequently when working on the hydraulic components.

NOTE: The pumps are not owner-repairable. If a pump fails, contact your Service Center. Do not disassemble the pump.

General Battery Information

WARNING!

- Should battery acid accidentally splatter into the eyes or onto the skin, rinse the affected area immediately with clean cold water. If there is any further discomfort, seek prompt medical attention.
- If acid spills on clothing, first dilute it with clean water, then neutralize with a solution of ammonia/water or baking soda/water.
- NEVER connect (or disconnect) battery charger clips to the battery while the charger is turned on, as it can cause sparks.
- Keep all sources of ignition (cigarettes, matches, lighters) away from the battery. The gas generated during charging can be combustible.

- As a further precaution, only charge the battery in a well ventilated area.
- Always shield eyes and protect skin and clothing when working near batteries.
- Batteries contain sulfuric acid and may emit explosive gases. Use extreme caution when handling batteries. Keep batteries out of the reach of children.

Battery Maintenance

- The battery is filled with battery acid and then sealed at the factory. However, every 50 operating hours remove the fill caps and check the level of the liquid electrolyte in the battery. If the level in any of the six cells has dropped below the bottom of the split ring inside the fill hole, refill the cell with distilled water.
- Spray the terminals and exposed wire with a battery terminal sealer, or coat the terminals with a thin coat of grease or petroleum jelly, to protect against corrosion.
- Always keep the battery cables and terminals clean and free of corrosion.
- Avoid tipping. Even a sealed battery will leak electrolyte when tipped.



WARNING! Batteries contain sulfuric acid and may emit explosive gases. Use extreme caution when handling batteries. Keep batteries out of the reach of children.

Tire Maintenance

Check the tire air pressure before each use. Inflation pressure of the rear tires is important for stability while the mower is in operation. If the tire diameter is not equal between the two tires, the mower will pull to one side. Keep the tires inflated to the recommended pressures. Improper inflation will shorten the tire service life. See the tire side wall for proper inflation pressures. Observe the following guidelines:

- Do not inflate a tire above the maximum pressure shown on the sidewall of the tire.
- Do not reinflate a tire that has been run flat or seriously under inflated. Have a qualified tire mechanic inspect and service the tire.
- Balance inflation pressure between the rear tires to help maintain straight travel (see tire side wall for proper inflation pressure).
- Keep the valve caps tightened to prevent air pressure loss.

Inflation Pressure:

Traction Tires—20 psi max; 8-10 psi recommended

Front Caster Wheel—28 psi max; 20-25 psi recommended

Cutting Deck Ball Wheels—Solid Polyurethane

Leaking Tires

When a flat tire occurs, repair or replace immediately. The normal procedure is to remove the wheel and replace it. If a tire is getting soft, park the mower on the nearest level, paved area.

1. Rear Tire
    a. Put blocks on each side of the opposite traction wheel and jack up the tire that leaks about an inch off the ground.
    b. Loosen and remove the lug nuts and remove the wheel.
    c. Mount a wheel and tire, replace the lug nuts, and using a torque wrench, tighten them to 60 ± 10 ft-lbs.
2. Front caster wheel
    a. Block both traction wheels and raise the caster wheel so that the tire is an inch off the ground.
    b. Loosen and remove the locknut from the axle assembly and pull the axle assembly from the caster yoke. The wheel and two spacer sleeves will drop free.
    c. Slip the axle assembly through one side of the caster yoke, through a spacer sleeve, a wheel, the other spacer sleeve and finally through the other side of the caster yoke.
    d. Tighten the locknut on the end of the axle assembly.
    e. Lower the mower off the jack and continue mowing.

The wheel with the leaking tire should be inflated to 20 psi and the wheel placed in a large bucket of water. Carefully inspect the tire, rim and valve for escaping air bubbles which indicate a leak. Mark each leak with a yellow marking crayon and then deflate the tire to 8 psi and repeat the inspection. If the leaks you find are pin hole size to 1⁄16" diameter, the tire can be repaired. If the leaks are larger than 1⁄16" diameter, the tire can be repaired. If the tire bead is damaged, the tire can be repaired or the tire will have to be replaced.

Lubrication

- Using a pressure lubricating gun, lubricate all grease fittings and points as noted in the Lubrication Chart.
- Lubricate all other pivot points with a quality lubricating oil as noted in the Oil Chart.

Using the Deck Wash System



WARNING! When using the deck wash system, never engage the deck from any position other than the operator's seat of the tractor. Do not use an assistant or engage deck in the presence of any bystanders.

Use the Deck Wash System to rinse grass clippings from the deck's underside and prevent the buildup of corrosive chemicals. Complete the following steps after each mowing:

NOTE: Make certain the machine's discharge chute is directed away from people, children, animals, and your house, garage, parked cars, etc.

1. Attach the nozzle adapter to a standard garden hose connected to a water supply.
2. Move the tractor to an area within reach of the hose where the dispersal of wet grass clippings is not objectionable to you. Disengage the PTO, engage the parking brake, and stop the engine.

3. Pull back the lock collar of the nozzle adapter and push the adapter onto one of the deck wash nozzles at either end of the mower deck. Release the lock collar to lock the adapter on the nozzle. See Fig. 6-3.

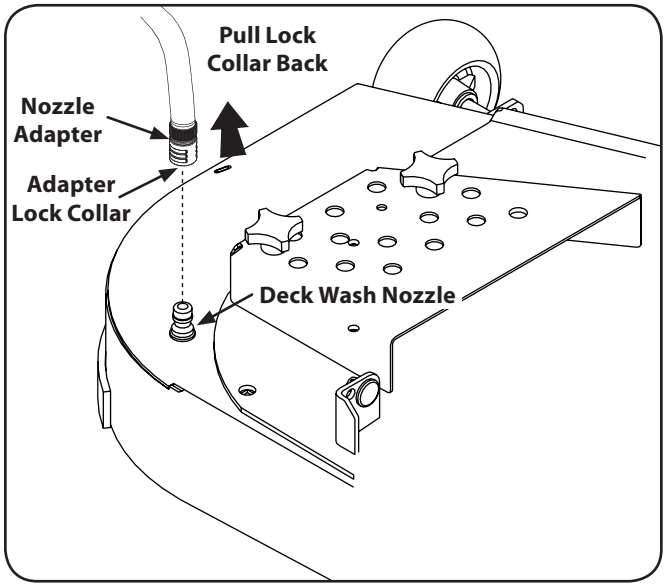

Figure 6-3

4. Turn on the water supply.
5. From the tractor operator's seat, start the engine and engage the PTO. Allow to run as needed. Disengage the PTO and stop the engine.
6. Turn off the water supply.
7. Pull back the lock collar of the nozzle adapter to disconnect the adapter from the nozzle.
8. Repeat the previous steps to clean the deck using the nozzle at the other end of the deck.

Cleaning the Spindle Pulleys

Once a month remove the belt covers to remove any accumulation of grass clippings from around the spindle pulleys and V-belt. Clean more often when mowing tall, dry grass.

Using the Transmission Bypass Valves

If for any reason the tractor will not drive or you wish to move the tractor, the two hydrostatic transmissions are equipped with a bypass valve that will allow you to manually move the tractor short distances.

WARNING! Do not tow the tractor, even with the bypass rod engaged. Serious transmission damage will result from doing so.

1. From just in front of the engine and just behind the seat, locate the transmission bypass valves. Refer to Fig. 6-4.

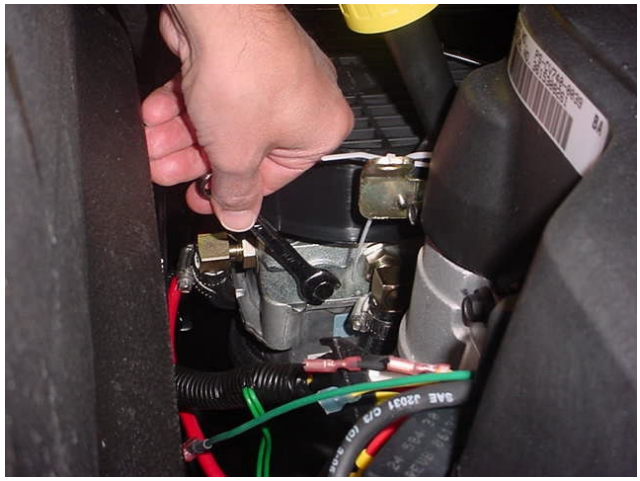

Figure 6-4

2. Using a standard 7⁄16" wrench turn the valve counter-clockwise one quarter turn.
3. Repeat the above procedure to engage the other bypass valve on the other side of the tractor.
4. After moving the tractor, return both valves to the operating position by turning the valve clockwise, but do not overtighten.

NOTE: The tractor will not drive with the bypass valves in the engage position.

Battery Storage

1. When storing the tractor for extended periods, disconnect the negative battery cable. It is not necessary to remove the battery.
2. All batteries discharge during storage. Keep the exterior of the battery clean, especially the top. A dirty battery will discharge more rapidly.
3. The battery must be stored with a full charge. A discharged battery can freeze sooner than a charged battery. A fully charged battery will store longer in cold temperatures than hot. Refer to chart below.

Specific Gravity	Freezing Temp (°F)
1.265	-71
1.250	-62
1.200	-16
1.150	5
1.100	16

4. Recharge battery when ever the specific gravity value is less than 1.225.

Tractor Storage

If your tractor is not going to be operated for an extended period of time (thirty days to approximately six months), the tractor should be prepared for storage. Store the tractor in a dry and protected location. If stored outside, cover the tractor (including the tires) to protect it from the elements. The procedures outlined below should be performed whenever the tractor is placed in storage.

1. Change the engine oil and filter following the instructions provided in the engine manual packed with this manual.



WARNING! Never store the tractor with fuel in the tank indoors or in poorly ventilated enclosures, where fuel fumes may reach an open flame, spark or pilot light as on a furnace, water heater, clothes dryer, etc.

2. If storing the tractor for 30 days or more:
   a. To prevent gum deposits from forming inside the engine's carburetor and causing possible malfunction of the engine, the fuel system must be either completely emptied, or the gasoline must be treated with a stabilizer to prevent deterioration.



WARNING! Fuel left in the fuel tank deteriorates and will cause serious starting problems.

   b. Using a fuel stabilizer:
      - Read the product manufacturer's instructions and recommendations.
      - Add to clean, fresh gasoline the correct amount of stabilizer for the capacity (approximately 3 gallons) of the fuel system.
      - Fill the fuel tank with treated fuel and run the engine for 2-3 minutes to get stabilized fuel into the carburetor.

   c. Emptying the fuel system:
      - Prior to putting the tractor in storage, monitor fuel consumption with the goal of running the fuel tank empty.
      - Close the fuel tank shutoff valve. Disconnect the fuel line from the carburetor and put the end into an approved fuel container.
      - Open the fuel tank shutoff valve and drain the fuel tank and line into the approved container. Reinstall the fuel line on the carburetor.
      - Start the engine and allow it to run out of fuel. This will prevent gum and varnish deposits from forming. Replace the fuel filter.
3. Remove the spark plugs and pour approximately one ounce of oil into each cylinder. Crank the engine one or two turns to spread the oil evenly on the cylinder walls. Replace the spark plugs.
4. Clean the engine and the entire tractor thoroughly.

   NOTE: Use of a pressure washer or garden hose is not recommended to clean your tractor. They may cause damage to electrical components, spindles, pulleys, bearings or the engine. The use of water will result in shortened life and reduce serviceability.
5. Sharpen the blades so that the mower will be ready to use when needed.
6. Protect the metal surfaces. Repair scratches with the appropriate touch-up spray paint. Brush a rust preventive oil on any unpainted surfaces including the pulleys and blades. (Be careful not to get any oil on the drive belts.)
7. Clean and fully charge the battery, then disconnect the negative cable at the battery to prevent possible discharge. Recharge the battery periodically when in storage.

   NOTE: Remove the battery if exposed to prolonged periods of sub-freezing temperatures. Store in a cool, dry location where temperatures are above freezing.
8. Lubricate all lubrication points.
9. Inspect the hydraulic hoses, lines and fittings. Replace as necessary.
10. Jack the mower up and store it on blocks to take the weight off of the tires.

Removing The Tractor From Storage

1. Check the battery. Charge if necessary.
2. Lower tractor off blocks, and inflate the tires to the recommended pressure.
3. Remove the spark plugs and wipe them off. Using the starter, crank the engine to pump the excess oil out of the spark plug holes. Replace the spark plugs and the ignition leads.
4. If drained before storing, fill the fuel tank with clean, fresh gasoline.
5. Check the level of the engine oil in the crankcase and the hydraulic reservoir tank.

6. Start the engine and allow to idle for a few minutes to ensure engine is operating properly.
7. Drive the tractor without a load to make certain all the tractor systems are functioning properly.

Adjustments

Adjusting the Seat

Refer to the Assembly & Set-Up section for instructions on adjusting the seat.

Adjusting Drive Control Levers

Refer to the Assembly & Set-Up section for instructions on adjusting the drive control levers.

Leveling the Mower Deck

When correctly adjusted the mower deck should be level side to side, and the front of the deck should be approximately ¼" lower than the rear of deck.

NOTE: Check the tractor's tire pressure before performing any deck leveling adjustments. See the tire side wall for proper inflation pressures.

Side to Side Leveling

1. Park the mower on a flat paved surface, engage the parking brake, shut off the engine, remove the key from the ignition switch, disconnect the spark plug wires and using the power implement lift, position the mowing deck into the 4" height of cut position. (The 4" height of cut position is recommended in order for one to see and obtain a measurement. Any height of cut position is acceptable as long as a proper measurement can be taken.)
2. Measure blade-to-ground height at the front tip of the right blade. To obtain an accurate measure, align blades in parallel with mower centerline, (i.e. front to back).
3. Measure blade-to-ground height at the front tip of the left blade. Be sure to measure at the blade tip with the blades arranged in proper position.
4. Adjust the eyebolt at the left front of the deck so that the blade-to-ground height at the right front blade tip matches that of the left front blade tip. This is done by loosening the jam nuts on the eyebolt and tightening the upper nut to raise the deck and loosening the nut to lower the deck.
5. The right front blade tip height is fixed so you must adjust the left front tip to match it. See Fig. 6-5.

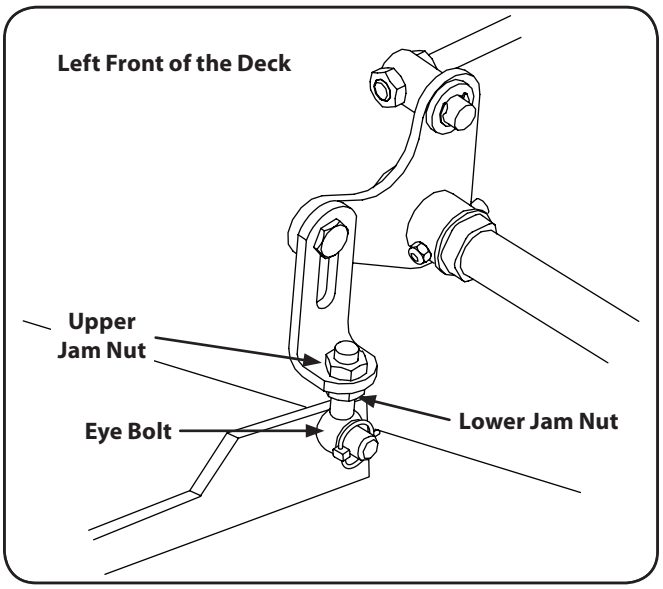

Figure 6-5

6. Once the proper adjustment is made, re-tighten the lower jam nut.

Front to Back Leveling

1. Measure the blade-to-ground height at the right rear blade tip. Again be sure to measure at the blade tip at the rear of the right blade when aligned along the mower centerline. The blade-to-ground height at the rear of the blade tip should be ⅛" to ¼" higher than the front tip. This is referred to as blade pitch. The same height difference should be true for the left blade, measured front and back. The pitch should not exceed 1/16" if cut height is below 1-½".
2. Loosen the inner jam nuts at the rear left and right of the horizontal threaded rods. See Fig. 6-6.

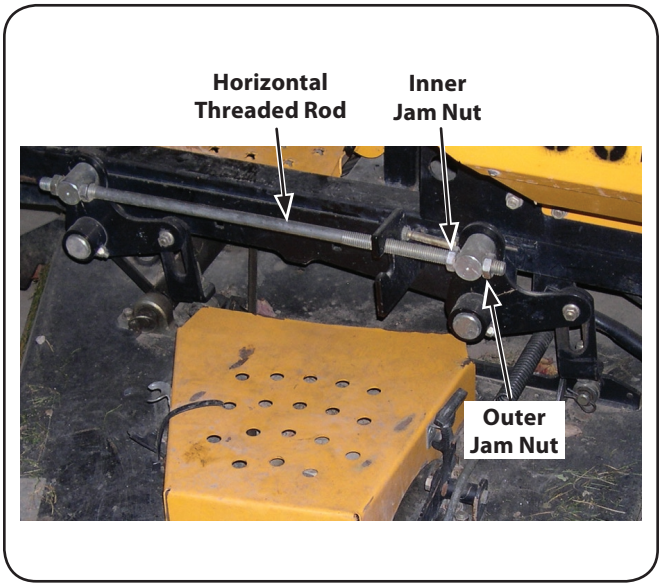

Figure 6-6

3. Start at the rear right to raise the rear of the deck, tighten the rear outer jam nut to raise the deck or loosen the rear outer jam nut to lower the rear of the deck.
4. Adjust the rear jam nut at the rear left to take the "slack" out of the threaded rod.
5. Tighten both inner jam nuts to secure the deck adjustment.
6. The final adjustment would be to take the "slack" out of the left rear linkage if the rear of the deck was raised by adjusting the jam nuts on the eyebolt. Loosen the jam nuts and tighten the upper nut to remove "slack".
7. In many cases it will be necessary to adjust deck height using both eyebolt adjustments and pitch adjustment to achieve the correct blade-to-ground heights. If you remember that the front right blade tip adjustment is fixed and you level to that height, adjusting the decks will be simplified.
5. Once the deck is level one may find that the height of cut does not match the height of cut indicator. A final adjustment may be made by lowering or raising the height of cut link accordingly. To raise the deck: remove the shoulder bolt mounting the height of cut link to the lift handle and reassemble the shoulder bolt in the lowest of the three holes. To lower the deck: remove the shoulder bolts mounting the height of cut link, flip the height of cut link around and reassemble the shoulder bolts in the top of the set of three holes and the bottom hole.

Adjusting the Deck Corner Gauge Wheels

WARNING! Keep hands and feet away from the discharge opening of the cutting deck.

NOTE: The deck gauge wheels are an anti-scalp feature of the deck and are not designed to support the weight of the cutting deck.

The mower deck cutting height can be set using the tractor's deck lift pedal. The deck heights range from 1" to 4". The deck gauge wheel position should be approximately ¼ to ½" above the ground when the deck is set in the desired height setting.

Using the lift pedal, set the deck in the desired height setting, then check the gauge wheel distance from the ground below. If necessary, adjust as follows:

1. Visually check the distance between the front gauge wheels and the ground. If the gauge wheels are near or touching the ground, they should be raised. If more than ½" above the ground, they should be lowered.
2. Remove the lock nut securing one of the front gauge wheel shoulder screws to the deck. Remove the gauge wheel and shoulder screw. Refer to Fig. 6-7.

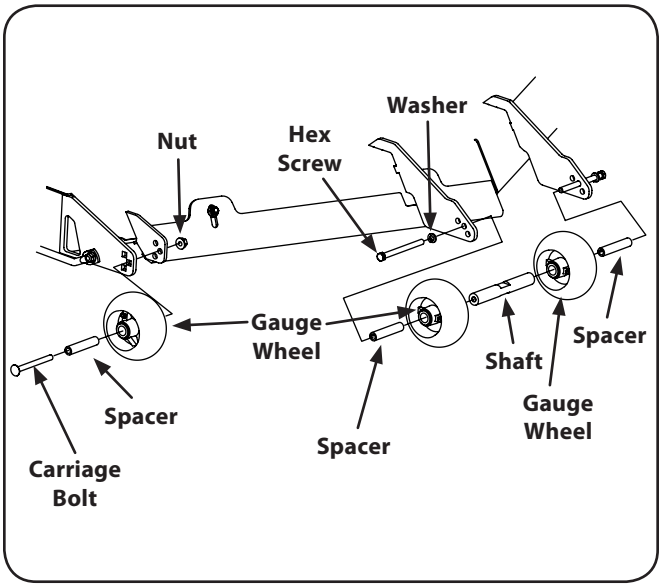

Figure 6-7

3. Insert the shoulder screw into the one of four index holes in the front gauge wheel bracket that will give the gauge wheel a ¼" to ½" clearance with the ground.
4. Note the index hole of the just adjusted wheel, and adjust the other gauge wheels into the respective index holes of the other gauge wheel brackets on the deck.

Adjusting the Center Gauge Wheels

Adjust the center gauge wheels to the same height as the outer gauge wheels. Be sure to insert the hex screw through the washer, the wheel bracket, the spacer and wheel and then the center shaft.

Adjusting the Rear Rollers

The rear rollers help prevent the scalping of high spots and uneven terrain across the center section of the deck. The rollers can be adjusted downward or upard 1". Lowering the roller will increase the striping effect left behind the mower. This positioning of the rear roller will also help to filter the mulched grass clippings into the turf.

NOTE: Roller should not be lowered if the cut height is set at 2-½" or lower.

Brakes

The parking brake handle is an over center lever that should engage with moderate force. To increase parking brake capacity, adjust brake cables at the brake arms equally. Adjust the cable housing nuts one full turn and check parking capacity. Repeat if parking brake does not hold.

Repair: The mower is equipped with drum brakes and will not normally require maintenance. If they are not working properly, please contact your service center.

a.

Adjusting the Front Skirt

The front skirt can be raised or lowered depending on the mowing conditions. The skirt has three settings; low, medium and high. See the table on page 23 in the Operation section for more information. Raise the skirt to cut higher volumes of grass and lower the skirt to increase grass lift for precision cutting.

1. Loosen — but do not remove — the nuts securing the skirt, place in the proper position and then retighten the nut. See Fig. 6-8.

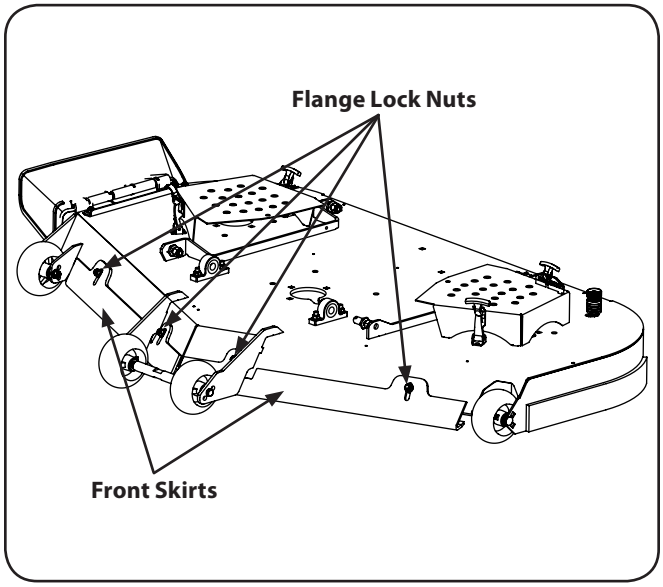

Figure 6-8

2. Repeat on the other side and be sure that both skirts are in the same position.

Removing/Installing the Inner Baffle

The inner flow-control baffle can be removed depending on the mowing conditions. The baffle controls discharge and can be removed for high-volume grasses and installed for precision cutting.

1. Remove the carriage bolts and flange lock nuts that secure the baffle to the deck to mow high-volume grasses. See Fig. 6-9.

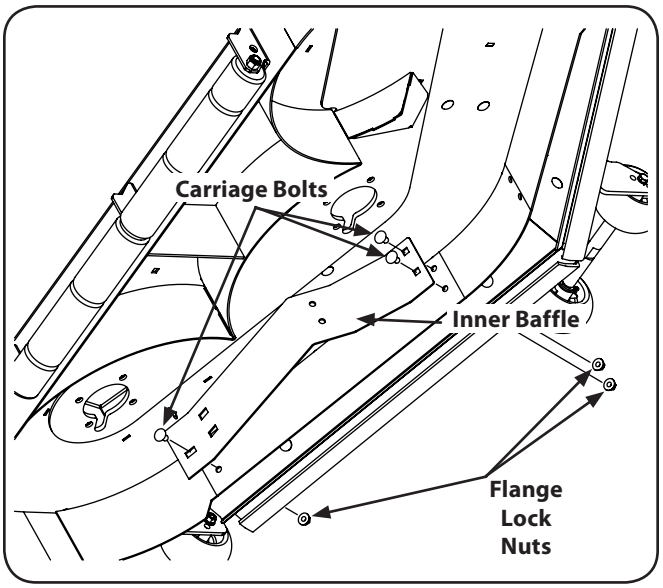

Figure 6-9

2. Re-install the inner baffle for precision cutting and make sure the baffle is properly secured.

Battery Removal

WARNING! Battery posts, terminals and related accessories contain lead and lead compounds. Wash hands after handling.

The battery is located on the right/rear of the tractor beneath the seat box frame. To remove the battery:

1. Remove the hold down straps.
2. Remove the hex cap screw and sems nut securing the black negative battery lead to the negative battery post (marked NEG). Move the cable away from the negative battery post.
3. Remove the hex cap screw and sems nut securing the red positive battery lead to the positive battery post (marked POS).
4. Carefully lift the battery out of the tractor.
5. Install the battery by repeating the above steps in the reverse order.

WARNING! Always connect the positive lead to the battery before connecting the negative lead. This will prevent sparking or possible injury from an electrical short caused by contacting the tractor body with tools being used to connect the cables.

Charging the Battery

Test and, if necessary, recharge the battery after the tractor has been stored for a period of time.

- A voltmeter or load tester should read 12.6 volts (DC) or higher across the battery terminals. See Fig. 7-1.

Voltmeter Reading	State of Charge	Charging Time
12.7	100%	Full Charge
12.4	75%	90 Min.
12.2	50%	180 Min.
12.0	25%	280 Min.

Figure 7-1

- Charge the battery with a 12-volt battery charger at a MAXIMUM rate of 10 amps.

Jump Starting

WARNING!: Failure to use this starting procedure can cause sparking, and the gases in the battery to explode.

1. Attach the end of the red jumper cable to the positive terminal (+) of the charged battery.
2. Attach the other end of the red jumper cable to the positive terminal (+) of the low charge battery.
3. Attach the end of the black jumper cable to the negative terminal of the charged battery.
4. Attach the other end of the black jumper cable to the frame of the unit with the low charge battery.

Servicing Electrical System

Fuse

There is one fuse located in the wiring between the ignition start switch and other electrical components. This is a standard plug-in type automotive fuse rated at 20 amp. Always use the same capacity fuse for replacement. If the electrical system does not function, check for a blown fuse.

If you have a recurring problem with blown fuses, have the tractor's electrical system checked by your Cub Cadet Service Dealer.

Safety Switch Operation Checks

The following operational checks should be made daily:

PTO Switch

1. Sit in the operator's seat. With the speed control pedals in the neutral position and the parking brake engaged, turn the PTO switch "ON" and try to start the engine. The engine should not start. If it does, the PTO switch must be replaced. See an authorized service dealer.
2. If the engine does not start, turn the PTO switch "OFF" and start the engine. Now turn the PTO switch "ON" and the blades should rotate.
3. If the blades do not turn, the PTO switch must be replaced, the seat switch must be replaced or the electric PTO clutch must be repaired. See an authorized service dealer.

Parking Brake Switch

- Sit in the operator's seat. With the speed control pedals in the neutral position and the PTO switch "OFF", release the parking brake and try to start the engine. The engine should not start.
- If it does, the parking brake switch must be repositioned or perhaps replaced. See an authorized service dealer. If the engine does not start, engage the parking brake and start the engine.

Seat Switch

- With the speed control pedals in the neutral position, the parking brake engaged and the PTO switch in the "OFF" position, start the engine. Now release the parking brake, hold down on the back of the operator's seat against spring pressure. Release the operator's seat and the engine should stop. If the engine does not stop, the seat switch must be replaced. See an authorized service dealer.
- With the speed control pedals in the neutral position, the parking brake engaged and the blade clutch switch in the "OFF" position, sit in the operator's seat and start the engine. Turn the PTO switch to the "ON" position and the blades should start to rotate. Raise up slightly off the operator's seat and the blades should stop. If the blades do not stop when you dismount from the operator's seat, the seat switch must be replaced. See an authorized service dealer.

Electric PTO Clutch

This clutch operates when the engine is running, the operator is in the operator's seat and the blade clutch switch is turned on. This electric clutch is a fairly trouble free device. If a problem develops and the blades do not turn, first check the 20 amp fuse in the yellow, 16-gauge wire between terminal "L" on the ignition switch and the hour meter and then investigate the wiring harness and the connections to the seat switch, the blade clutch switch and the electric blade clutch. Then check the seat switch, the PTO switch and finally the electric blade clutch. If the PTO clutch is still not working properly, see an authorized service dealer.

Deck Removal

Remove the mower deck from the tractor as follows:

1. Lower the deck to the ground. Capture the deck lift by placing the clevis pin behind the lowest position.
2. Apply the parking brake. Remove ignition key and both spark plug caps.
3. Remove tension off the PTO belt by moving the belt tensioning rod. See Fig. 7-2.

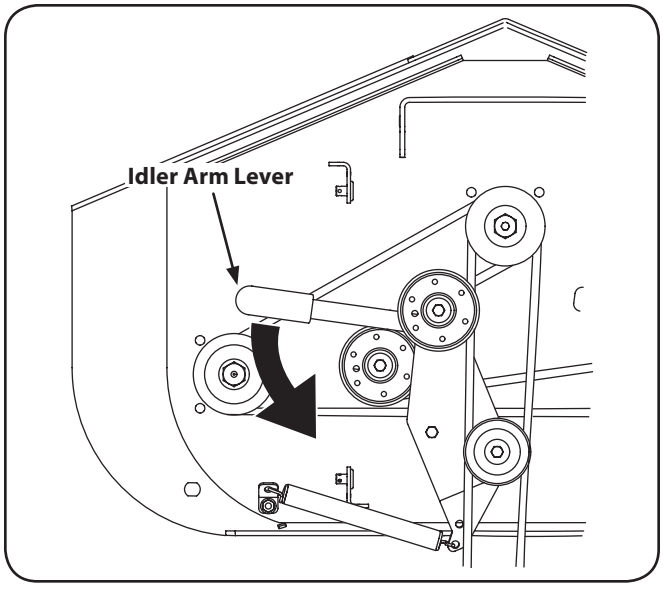

Figure 7-2

NOTE: There is a certain amount of spring tension due to the weight of the deck. When removing the lift linkage from the deck the tension of the springs will go from the deck to the deck lift pedal. Not capturing the deck lift pedal while removing the lift linkage from the deck will cause it to snap back.

4. Detach the mower drive belt.
5. Remove the six linch pins from the right and left side of the mower and from the front of the mower.
6. Turn front wheels as if to make a pivot turn.
7. Shift the deck toward the operator's left side of the mower and remove.
8. To install reverse the process.

WARNING! The muffler at the rear of the tractor may be extremely hot, and could cause serious burns. Use extreme caution when near the muffler. Allow the muffler to fully cool before removing the belt from the PTO pulley.

Replacing the Deck Belt

1. Set the parking brake. Remove ignition key and both spark plug caps.
2. Pull the four draw latches up and away from the deck covers to unlatch and remove both covers.
3. Using a ½" socket breaker bar or socket ratchet insert the male end into the ½" square opening in the lower idler arm assembly and pull the idler arm clockwise. See Fig. 7-3. While holding the idler arm back, loosen the deck belt from the pulley and slide the belt away from the pulley.

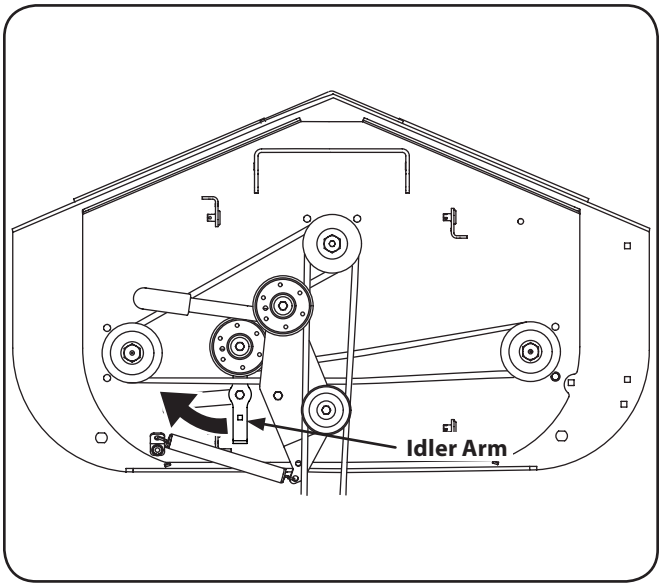

Figure 7-3

4. Remove tension of the PTO belt by moving the belt tensioning rod. See Fig. 7-2. Loosen the belt retaining bolt.
5. Pull the tensioner pulley away from the belt and remove the PTO belt then remove the deck belt.
6. Reverse the process to install the belt.

NOTE: When replacing belts do not overtighten. Adjust the idler pulley so that a ten-pound pull with a spring scale between two pulleys deflects the belt about ½".

Replacing the Blades

WARNING! Before performing any maintenance, place the PTO switch in the "OFF" position, engage the parking brake lever, turn the ignition key to the "OFF" position and remove the key from the switch. Protect your hands by using heavy gloves when handling the blades. When servicing the mower deck, be careful not to cut yourself on the sharpened blades.

1. Remove the key from the ignition and disconnect the spark plugs.
2. Jack up the front of the mowing deck about one foot and block it in that position.
3. Wrap a rag around one end of the blade and grasp it to prevent it from turning, or secure the blade by placing a block of wood between the blade and the deck housing. See Fig. 7-4.

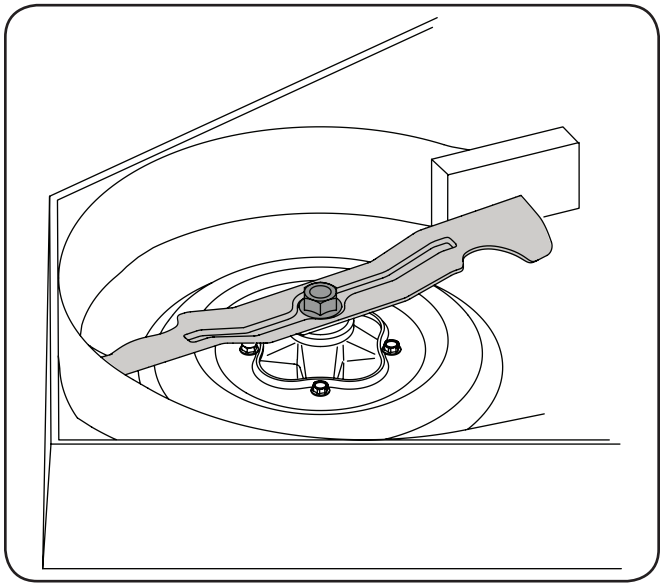

Figure 7-4

4. Use a 1-⅛" socket wrench on the pulley side of the spindle bolt. See Fig. 7-5.

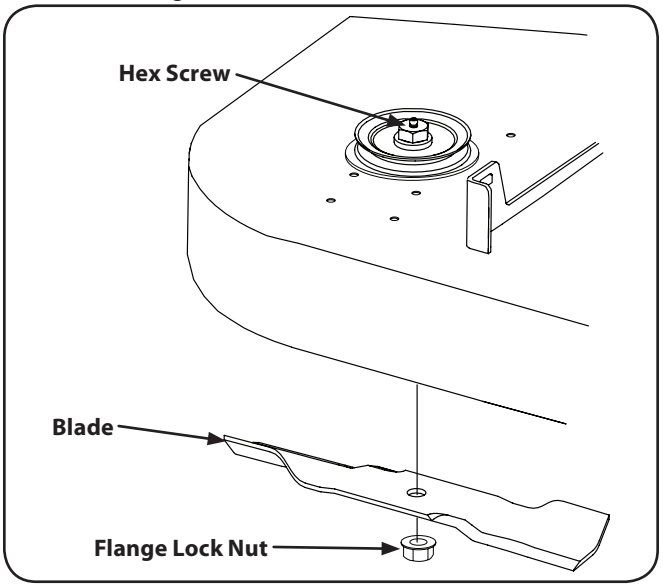

Figure 7-5

5. Remove the hex nut at the blade using a 1-⅛" wrench.
6. Remove the blade.
7. To replace the blade reverse the above process and tighten nut to 100-120 lb ft.

NOTE: Add a small amount of multi-purpose grease to the bolt threads to avoid corrosion and galvenic action.

WARNING! Never mow with dull blades. Blades that are bent should be replaced. The cutting blades are sharp and can cause severe injury. Wrap the cutting surface of the blade with a rag to avoid injury.

Sharpening the Blades

1. Set the parking brake.
2. Clean any debris from the blades. Keep blades sharp and free of build up at all times.
3. Sharpen blades evenly at the original 30° angle to maintain balanced cutting blades. Do not sharpen the underside of the blades. Use a electric blade sharpener, a conventional electric grinder or a hand file to sharpen the blades.
4. Replace any blade with severe nicks or dents that cannot be removed by filing.
5. Check the balance of the blade after sharpening by placing it on a blade balancer. Do not use un-balanced blades.
6. If the blade dips on one end, file stock off of the cutting surface on that end.

NOTE: Replace any blades that cannot easily be balanced.

Changing the Spindle Assembly

1. Jack up the front of the mowing deck about one foot and block it in that position.
2. Make sure the blade clutch is disengaged.
3. Remove the deck cover.
4. Remove the drive belts. (See Replacing the Deck belt.)
5. Remove the blade. (See Replacing the Blades)
6. Using a wrench or socket ratchet remove flange lock nuts, and the four hex flange bolts. Remove the spindle assembly. See Fig. 7-6.

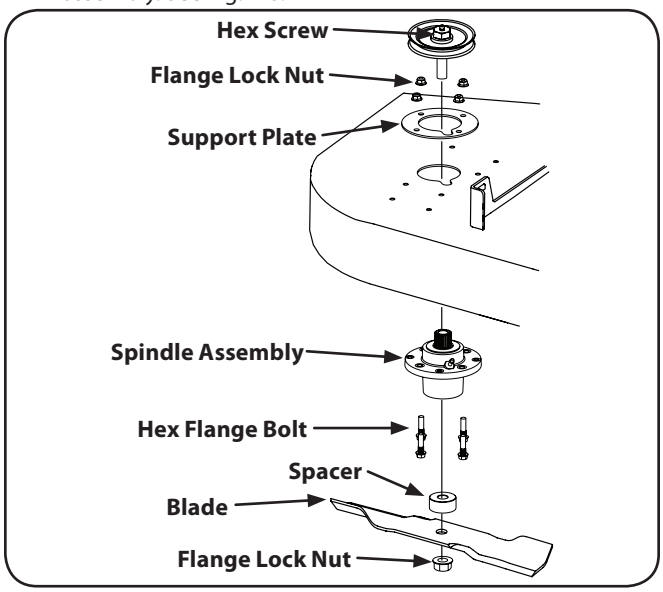

Figure 7-5

7. Reverse the process to install the spindle assembly.

Tractor Creeping

Creeping is the slight forward or backward movement of the mower when the throttle is on and the speed control pedals are in the neutral position. If your mower creeps, see an authorized service dealer.

Tractor High Speed Tracking

If the tractor tracks to one side with both drive control levers fully forward, adjust the control levers as follows:

1. Check for proper and balanced air pressure in both front and rear tires. Refill tires if necessary.
2. Check hydraulic fluid level (Ref. Engine owner's manual)
3. Perform the steps in the previous section, Tractor Creeping, to verify that the tractor is not creeping.
4. Recheck the tracking after making any adjustments to the transmission control rods.
5. If uneven tracking persists, adjust as follows:
   a. If the tractor tracks to the right, adjust the left control lever stop bolt to make it longer. See Fig. 7-6.

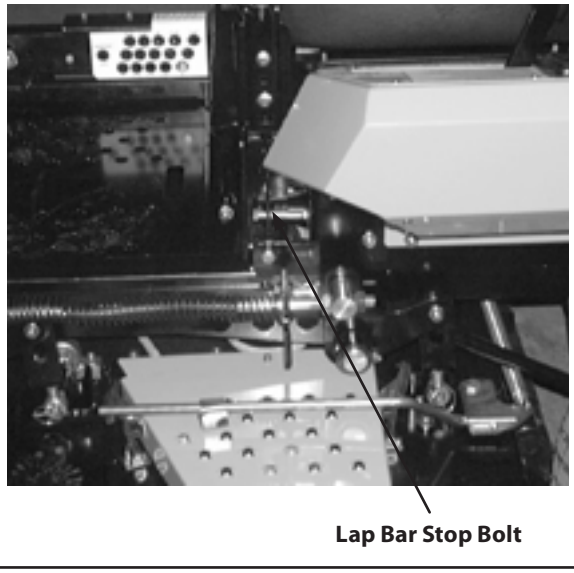

Figure 7-6

   b. If the tractor tracks to the left, adjust the right control lever stop bolt to make it longer.
5. Recheck the tracking and fine tune the adjustment as necessary.

   NOTE: If the stop bolt is adjusted too far, the tracking problem will change sides. Make fine tuning adjustments by shortening the same bolt.

Troubleshooting

9

Problem	Cause	Remedy
Engine fails to start	1. PTO/Blade Engage knob engaged.	1. Place knob in disengaged (OFF) position.
	2. Parking brake not engaged.	2. Engage parking brake.
	3. Drive control levers not fully outward in neutral position.	3. Move drive control levers fully outward in neutral position.
	4. Spark plug wire(s) disconnected.	4. Connect wire(s) to spark plug(s).
	5. Throttle control lever not in correct starting position.	5. Place throttle lever in the fast position.
	6. Choke not activated.	6. Pull choke control into full choke position.
	7. Fuel tank empty, or stale fuel.	7. Fill tank with clean, fresh (less than 30 days old) gas.
	8. Blocked fuel line.	8. Clean fuel line and replace fuel filter.
	9. Faulty spark plug(s).	9. Clean, adjust gap or replace plug(s).
	10. Engine flooded.	10. Crank engine with throttle in FAST position.
Engine runs erratic	1. Tractor running with CHOKE activated.	1. Push the choke control into the choke off position.
	2. Spark plug wire(s) loose.	2. Connect spark plug wire(s).
	3. Blocked fuel line or stale fuel.	3. Clean fuel line; fill tank with clean, fresh gasoline and replace fuel filter.
	4. Vent in gas cap plugged.	4. Clear vent or replace cap if damaged.
	5. Water or dirt in fuel system.	5. Drain fuel tank. Refill with clean, fresh gasoline.
	6. Dirty air cleaner.	6. Replace air cleaner paper element or clean foam pre-cleaner.

Problem	Cause	Remedy
Engine overheats	1. Engine oil level low. 2. Air flow restricted.	1. Fill crankcase with proper amount and weight of oil. 2. Clean grass clippings and debris from around the engine's cooling fins and blower housing.
Engine hesitates at high RPM	1. Spark plug(s) gap too close.	1. Remove spark plug(s) and reset the gap.
Engine Idles rough	1. Spark plug(s) fouled, faulty or gap too wide. 2. Dirty air cleaner.	1. Replace spark plug(s). Set plug gap. 2. Replace air cleaner element and/or clean pre-cleaner.
Excessive vibration	1. Cutting blade loose or unbalanced. 2. Damaged or bent cutting blade.	1. Tighten blade and spindle. 2. Replace blade.
Uneven cut	1. Deck not leveled properly. 2. Dull blade. 3. Uneven tire pressure.	1. Perform side-to-side deck adjustment. 2. Sharpen or replace blade. 3. Check tire pressure in all four tires.
Mower will not mulch grass (If Equipped w/Mulching Kit)	1. Engine speed too low. 2. Wet grass. 3. Excessively high grass. 4. Dull blade.	1. Place throttle in FAST (rabbit) position. 2. Do not mulch when grass is wet. 3. Mow once at a high cutting height, then mow again at desired height or make a narrower cutting swath. 4. Sharpen or replace blade.

Replacement Parts

10

Component	Part Number and Description
	KM-BPR4ES Spark Plug
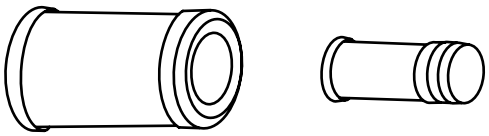	KM-11013-7020 Outer Air Filter KM-11013-7019 Inner Air Filter
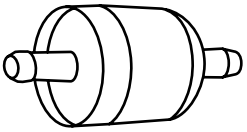	KM-49019-7001 Fuel Filter
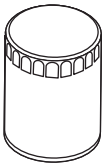	KM-49065-2078 Oil Filter
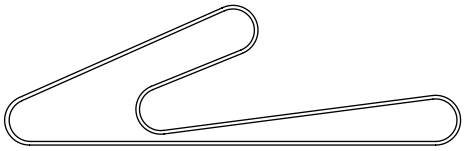	01005376 Deck Belt
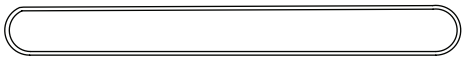	00068079 PTO Belt
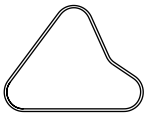	01007015 Drive Belt
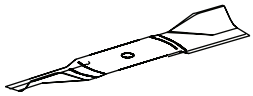	02005019 Hi-Lift Blade, 21.0
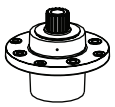	01003532 Deck Spindle

Component	Part Number and Description	
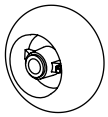	634-3159	Deck Wheel
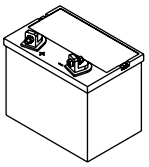	925-1707D	Battery
	951-3124E	Gas Cap
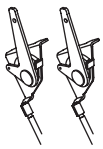	02003421 02003422	Throttle Control Choke Control
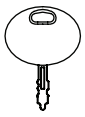	725-1341B	Ignition Key
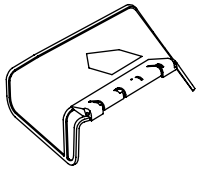	01006693	Discharge Chute Assembly
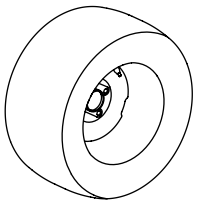	02002668	Wheel Assembly
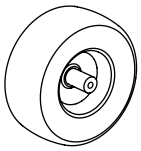	02002821	Caster Wheel Assembly

Attachments & Accessories

11

The following attachments and accessories are compatible with your TANK tractor. See your dealer or the retailer from which you purchased your tractor for information regarding price and availability.

Part Number	Part
59A30019150	Striper Kit
59A30020150	Snow Blade Kit
59A30017150	Spreader Kit
59A30021150	12 Volt Outlet Kit
59A30018150	Caster Wheel Kit
59A30006150	60" Bagger Power Assist Kit
59A30004150	12 Bushel Dump Hopper Kit
59A3001150	12 Bushel Triple Bagger Kit
59A30030150	60" Mulch Kit
590-488-150	All Trail Tires
590-851-150	Discharge Restrictor Kit
59A30011150	Light Kit
01008246	21" Bahia Blades (Low Lift)

Specifications

12

NOTE: Specifications subject to change without notice.

Engine:	31HP Kawasaki
Type:	Vertical air cooled V-Twin
Air Cleaner:	Dual Paper element with rain cap
Lube System:	Pressurized with oil filter
Hydraulic System:	In tank filter, 3 quart capacity
Starter:	12-volt electric
Traction Drive:	Engine to two variable-output hydraulic pumps each connected to individual wheel motors
Cutter Deck Drive:	60" belt driven
Clutch:	Electric
Deck Lift:	Foot Pedal with pin lock for height adjustment at ¼" increments
Cutting Height:	1" to 5"
No. of Blades:	3, belt-driven, power take-off from engine
Controls:	Engine ignition and start switch; throttle; choke; left and right steering levers; electric blade clutch switch; parking brake; mower deck lift
Parking Brake:	Mechanical linkage brake handle to internal drum brakes
Front Caster Wheels:	13 x 6.50 - 6
Tire Pressure:	8-10 psi rear, 20-25 psi front caster
Drive Wheels:	24 x 12.00-12
Frame:	2" Steel structural tube and plate, all welded construction
Seat:	Adjustable seat. 5" Adjustment, w/ arm rests
Fuel Tank:	Two 6.5 gallon with individual shut off valves
Ground Speed:	0-12 + MPH forward & 0-5 MPH reverse
Instrumentation:	Hour meter, Tachometer, Maintenance-Minder
Net Weight:	1220 lbs

* As rated by engine manufacturer

FEDERAL and/or CALIFORNIA EMISSION CONTROL WARRANTY STATEMENT

YOUR WARRANTY RIGHTS AND OBLIGATIONS

MTD Consumer Group Inc, the United States Environmental Protection Agency (EPA), and, for those products certified for sale in the state of California, the California Air Resources Board (CARB) are pleased to explain the emission (evaporative and/or exhaust) control system (ECS) warranty on your outdoor 2006 and later small off-road spark-ignited engine and equipment (outdoor equipment engine) In California, new outdoor equipment engines must be designed, built and equipped to meet the State's stringent anti-smog standards (in other states, 1997 and later model year equipment must be designed, built, and equipped to meet the U.S. EPA small off-road, spark ignition engine regulations. MTD Consumer Group Inc must warrant the ECS on your outdoor equipment engine for the period of time listed below provided there has been no abuse, neglect or improper maintenance of outdoor equipment engine.

Your ECS may include parts such as the carburetor, fuel-injection system, the ignition system, catalytic converter, fuel tanks, fuel lines, fuel caps, valves, canisters, filters, vapor hoses, clamps, connectors, and other associated emission-related components.

Where a warrantable condition exists, MTD Consumer Group Inc will repair your outdoor equipment engine at no cost to you including diagnosis, parts and labor.

MANUFACTURER'S WARRANTY COVERAGE:

This emission control system is warranted for two years. If any emission-related part on your outdoor equipment engine is defective, the part will be repaired or replaced by MTD CONSUMER GROUP INC.

OWNER'S WARRANTY RESPONSIBILITIES:

As the outdoor equipment engine owner, you are responsible for performance of the required maintenance listed in your owner's manual. MTD Consumer Group Inc recommends that you retain all receipts covering maintenance on your outdoor equipment engine, but MTD Consumer Group Inc cannot deny warranty solely for the lack of receipts.

As the outdoor equipment engine owner, you should however be aware that MTD Consumer Group Inc may deny you warranty coverage if your outdoor equipment engine or a part has failed due to abuse, neglect, or improper maintenance or unapproved modifications.

You are responsible for presenting your outdoor equipment engine to MTD Consumer Group Inc's distribution center or service center as soon as the problem exists. The warranty repairs should be completed in a reasonable amount of time, not to exceed 30 days. If you have a question regarding your warranty coverage, you should contact the MTD Consumer Group Inc Service Department at 1-800-800-7310 or via email at http://support.mtdproducts.com

GENERAL EMISSIONS WARRANTY COVERAGE:

MTD Consumer Group Inc warrants to the ultimate purchaser and each subsequent purchaser that the outdoor equipment engine is: Designed, built and equipped so as to conform with all applicable regulations; and free from defects in materials and workmanship that cause the failure of a warranted part to be identical in all material respects to that part as described in MTD Consumer Group Inc's application for certification.

The warranty period begins on the date the outdoor equipment engine is delivered to an ultimate purchaser or first placed into service. The warranty period is two years.

Subject to certain conditions and exclusions as stated below, the warranty on emission-related parts is as follows:

1. Any warranted part that is not scheduled for replacement as required maintenance in the written instructions supplied, is warranted for the warranty period stated above. If the part fails during the period of warranty coverage, the part will be repaired or replaced by MTD Consumer Group Inc according to subsection (4) below. Any such part repaired or replaced under warranty will be warranted for the remainder of the period.
2. Any warranted part that is scheduled only for regular inspection in the written instructions supplied is warranted for the warranty period stated above. Any such part repaired or replaced under warranty will be warranted for the remaining warranty period.
3. Any warranted part that is scheduled for replacement as required maintenance in the written instructions supplied is warranted for the period of time before the first scheduled replacement date for that part. If the part fails before the first scheduled replacement, the part will be repaired or replaced by MTD Consumer Group Inc according to subsection (4) below. Any such part repaired or replaced under warranty will be warranted for the remainder of the period prior to the first scheduled replacement point for the part.
4. Repair or replacement of any warranted part under the warranty provisions herein must be performed at a warranty station at no charge to the owner.
5. Notwithstanding the provisions herein, warranty services or repairs will be provided at all of our distribution centers that are franchised to service the subject engines or equipment.
6. The outdoor equipment engine owner will not be charged for diagnostic labor that is directly associated with diagnosis of a defective, emission-related warranted part, provided that such diagnostic work is performed at a warranty station.
7. MTD Consumer Group Inc is liable for damages to other engine or equipment components proximately caused by a failure under warranty of any warranted part.
8. Throughout the off-road engine and equipment warranty period stated above, MTD Consumer Group Inc will maintain a supply of warranted parts sufficient to meet the expected demand for such parts.
9. Any replacement part may be used in the performance of any warranty maintenance or repairs and must be provided without charge to the owner. Such use will not reduce the warranty obligations of MTD Consumer Group Inc.
10. Add-on or modified parts that are not exempted by the Air Resources Board may not be used. The use of any non-exempted add-on or modified parts by the ultimate purchaser will be grounds for disallowing a warranty claims. MTD Consumer Group Inc will not be liable to warrant failures of warranted parts caused by the use of a non-exempted add-on or modified part.

WARRANTED PARTS:

The repair or replacement of any warranted part otherwise eligible for warranty coverage may be excluded from such warranty coverage if MTD Consumer Group Inc demonstrates that the outdoor equipment engine has been abused, neglected, or improperly maintained, and that such abuse, neglect, or improper maintenance was the direct cause of the need for repair or replacement of the part. That notwithstanding, any adjustment of a component that has a factory installed, and properly operating, adjustment limiting device is still eligible for warranty coverage. Further, the coverage under this warranty extends only to parts that were present on the off-road engine and equipment purchased.

The following emission warranty parts are covered (if applicable):

(1) Fuel Metering System

- Cold start enrichment system (soft choke)
- Carburetor and internal parts (or fuel injection system)
- Fuel pump
- Fuel tank

(2) Air Induction System

- Air cleaner
- Intake manifold

(3) Ignition System

- Spark plug(s)
- Magneto ignition system

(4) Exhaust System

- Catalytic converter
- SAI (Reed valve)

(5) Miscellaneous Items Used in Above System

- Vacuum, temperature, position, time sensitive valves and switches
- Connectors and assemblies

(6) Evaporative Control

- Fuel hose
- Fuel hose clamps
- Tethered fuel cap
- Carbon canister
- Vapor lines

CUB CADET LLC
MANUFACTURER'S LIMITED WARRANTY FOR
TANK M/TANK S ZERO-TURN COMMERCIAL RIDING MOWER

IMPORTANT: To obtain warranty coverage owner must present an original proof of purchase and applicable maintenance records to the servicing dealer. Please see the operator's manual for information on required maintenance and service intervals.

The limited warranty set forth below is given by Cub Cadet LLC with respect to new merchandise purchased or leased and used in the

United States and/or its territories and possessions, and by MTD Products Limited with respect to new merchandise purchased or leased and used in Canada and/or its territories and possessions (either entity respectively, "Cub Cadet").

Cub Cadet warrants this product (excluding its *Normal Wear Parts, Engines, Batteries and Attachments* as described below) against defects in material and workmanship for a period of three (3) years commencing on the date of original retail purchase or lease and will, at its option, repair or replace, free of charge, any part found to be defective in materials or workmanship.

Normal Wear Parts are warranted to be free from defects in material and workmanship for a period of thirty (30) days or one hundred (100) operation hours, whichever comes first, commencing on the date of original retail purchase or lease. Normal wear parts include, but are not limited to items such as: belts, blades, blade adapters, grass bags, rider deck wheels, seats, and tires.

Engines are warranted to be free from defects in material and workmanship for a period of two (2) years commencing on the date of original retail purchase or lease.

Batteries have a one-year prorated limited warranty against defects in material and workmanship, with 100% replacement during the first three months. After three months, the battery replacement credit is based on the months remaining in the twelve (12) month period dating back to the original date of original sale or lease. Any replacement battery will be warranted only for the remainder of the original warranty period.

Attachments — Cub Cadet warrants attachments for this product against defects in material and workmanship for a period of one (1) year, commencing on the date of the attachment's original purchase or lease. Attachments include, but are not limited to items such as: grass collectors and mulch kits.

This limited warranty shall only apply if this product has been operated and maintained in accordance with the Operator's Manual furnished with the product, and has not been subject to misuse, abuse, neglect, accident, improper maintenance, alteration, vandalism, theft, fire, water, or damage because of other peril or natural disaster. Damage resulting from the installation or use of any part, accessory or attachment not approved by Cub Cadet for use with the product(s) covered by this manual will void your warranty as to any resulting damage. In addition, Cub Cadet may deny warranty coverage if the hour meter, or any part thereof, is altered, modified, disconnected or otherwise tampered with.

HOW TO OBTAIN SERVICE: Warranty service is available, WITH PROOF OF PURCHASE AND APPLICABLE MAINTENANCE RECORDS, through your local authorized service dealer. To locate the dealer in your area:

In the U.S.A.:
Check your Yellow Pages, or contact Cub Cadet LLC at P.O. Box 361131, Cleveland, Ohio 44136-0019, call 1-877-282- 8684 or log on to our website at www.cubcadet.com.

In Canada:
Contact MTD Products Limited, Kitchener, ON N2G 4J1, call 1-800-668-1238 or log on to our website at www.mtdcanada.com.

Without limiting the foregoing, this limited warranty does not provide coverage in the following cases:

a. Routine maintenance items such as lubricants, filters, blade sharpening, tune-ups, brake adjustments, clutch adjustments, deck adjustments, and normal deterioration of the exterior finish due to use or exposure.

b. Service completed by someone other than an authorized service dealer.

c. Cub Cadet does not extend any warranty for products sold or exported outside of the United States and/or Canada, and their respective possessions and territories, except those sold through Cub Cadet's authorized channels of export distribution.

d. Replacement parts and\or accessories that are not genuine Cub Cadet parts.

e. Transportation charges and service calls.

There are no implied warranties, including without limitation any implied warranty of merchantability or fitness for a particular purpose. No warranties shall apply after the applicable period of express written warranty above. No other express warranties beyond those mentioned above, given by any person or entity, including a dealer or retailer, with respect to any product, shall bind Cub Cadet. The exclusive remedy is repair or replacement of the product as set forth above. The terms of this warranty provide the sole and exclusive remedy arising from the sale and/or lease of the products covered hereby. Cub Cadet shall not be liable for any incidental or consequential loss or damage including, without limitation, expenses incurred for substitute or replacement lawn care services or for rental expenses to temporarily replace a warranted product.

Some jurisdictions do not allow the exclusion or limitation of incidental or consequential damages, or limitations on how long an implied warranty lasts, so the above exclusions or limitations may not apply to you.

In no event shall recovery of any kind be greater than the amount of the purchase price of the product sold. **Alteration of safety features of the product shall void this warranty.** You assume the risk and liability for loss, damage, or injury to you and your property and/or to others and their property arising out of the misuse or inability to use the product.

This limited warranty shall not extend to anyone other than the original purchaser or to the person for whom it was purchased as a gift.

HOW LOCAL LAWS RELATE TO THIS WARRANTY: This limited warranty gives you specific legal rights, and you may also have other rights that vary in different jurisdictions.

Cub Cadet LLC, P.O. BOX 361131 CLEVELAND, OHIO 44136-0019, Phone: 1-877-282-8684
MTD Products Limited, Kitchener, ON N2G 4J1, Phone: 1-800-668-1238

GDOC-100213 REV. A