Hydrostatic Zero-Turn Commercial Riding Mower

Professional Turf Equipment

Z-Wing 48

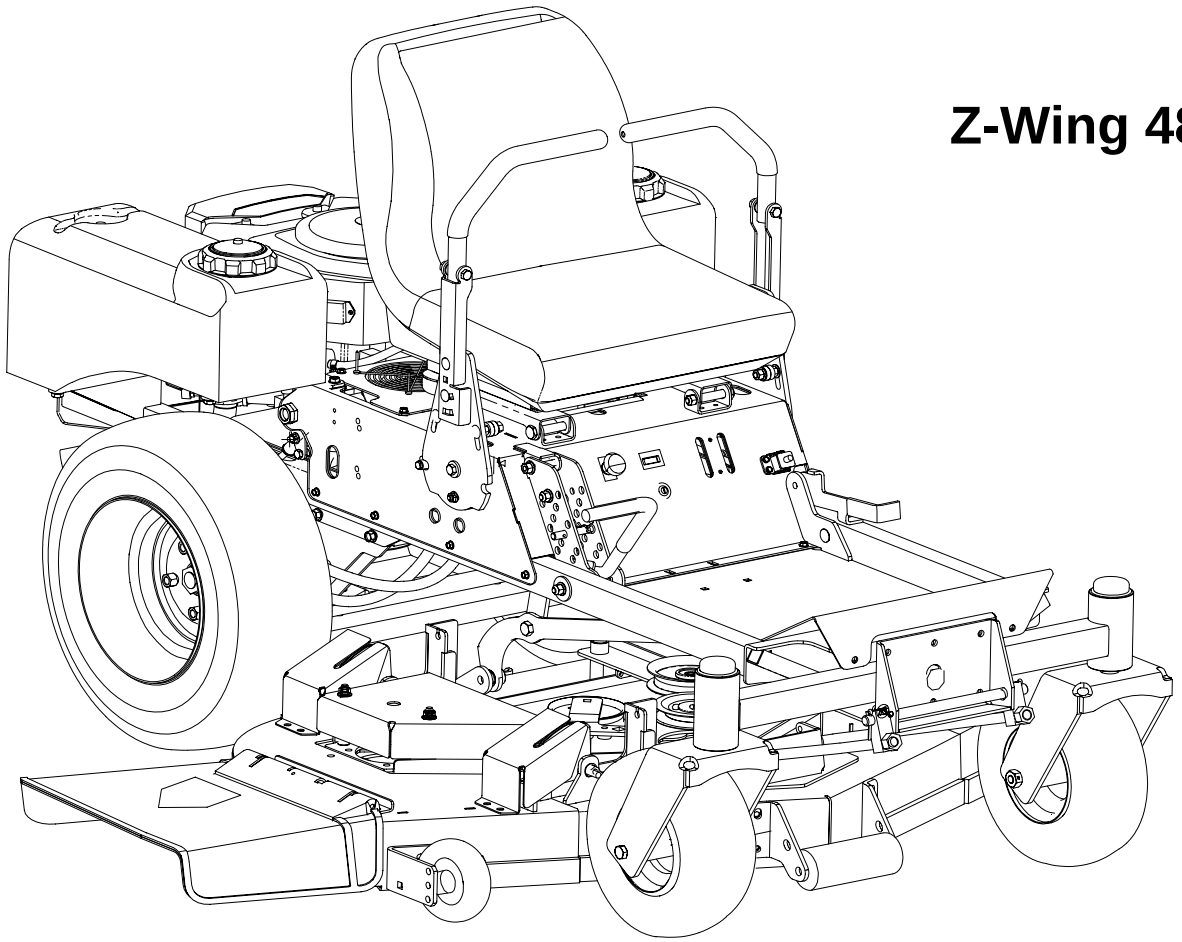

ILLUSTRATED PARTS LIST

TABLE OF CONTENTS

Frame Assembly. 3
48" Fold Fabricated Cutter Deck . . . . . 4 and 5
48" Spindle Assembly. . . . . 6 and 7
Drive Assembly. . . . . 8 and 9
Brake Assembly . . . . . 10 and 11
Control Assembly . . . . . 12 and 13
23HP Kohler Engine Assembly . . . . . 14 and 15
23HP Electrical Assembly Kohler. 16
48" Wheel Assembly. 17
Lift Assembly . . . . . 18 and 19
Seat Assembly 20

MODEL LISTED IN THIS MANUAL

23HP Tank,
53AI5BBY750

Frame Assembly- Figure 1 and Parts List

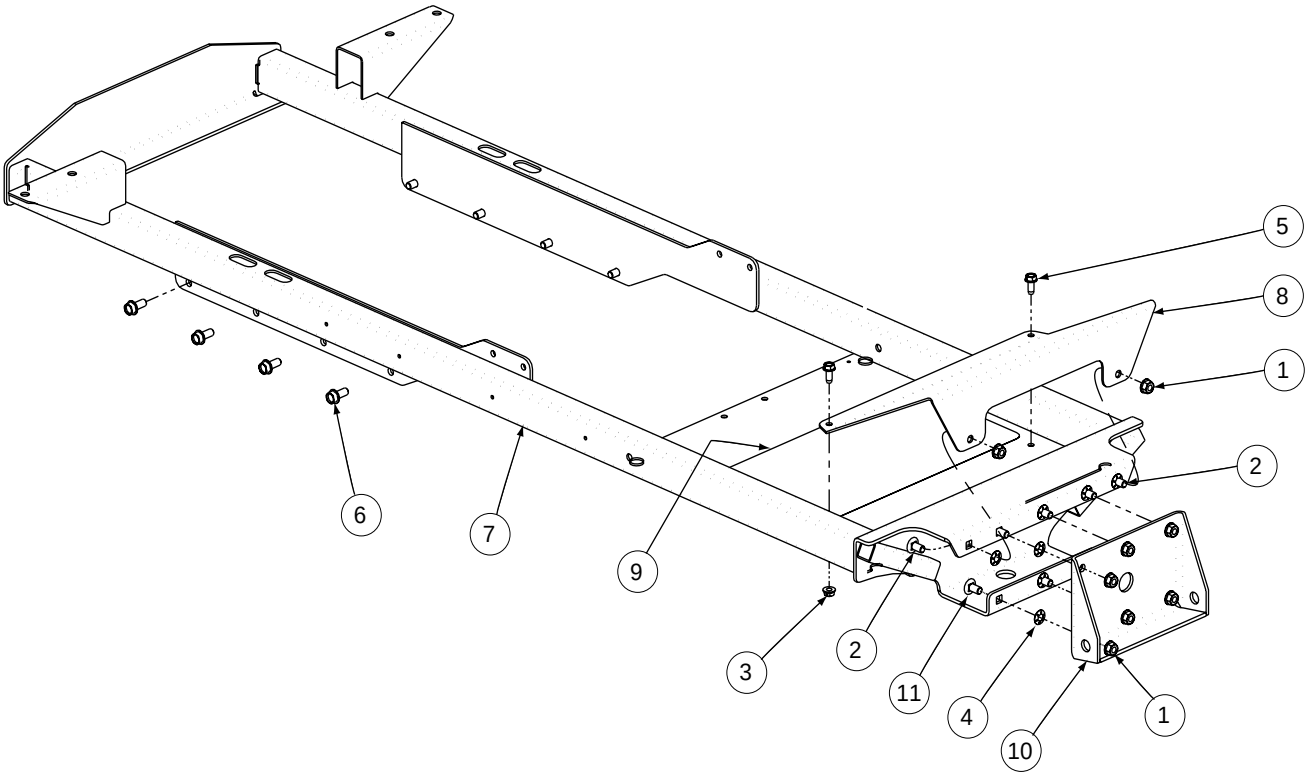

GD: 02000202-05/30/05

Ref. No.	Part No.	Description	Qty.
1	00022560	Flange Lock Hex Nut, 3/8-16	8
2	01000372	Carriage Bolt, 3/8-16 x .75 Lg	2
3	01000635	Hex Flange Lock Nut, 5/16-18	2
4	01008225	Push Retainer, 3/8	8
5	01008620	Self Tapping Screw 5/16-18 x .750	2
6	01009243	Self Tapping Screw 3/8-16 x .875	8
7	02000214	Frame Assembly	1
8	02000374	Foot Rest Bracket	1
9	02000670	Abrasive Pad	1
10	02000825	Front Axle Bracket Assembly	1
11	01000643	Carriage Bolt, 3/8-16 x 1.00	6

48" Fold Fabricated Cutter Deck - Figure 2

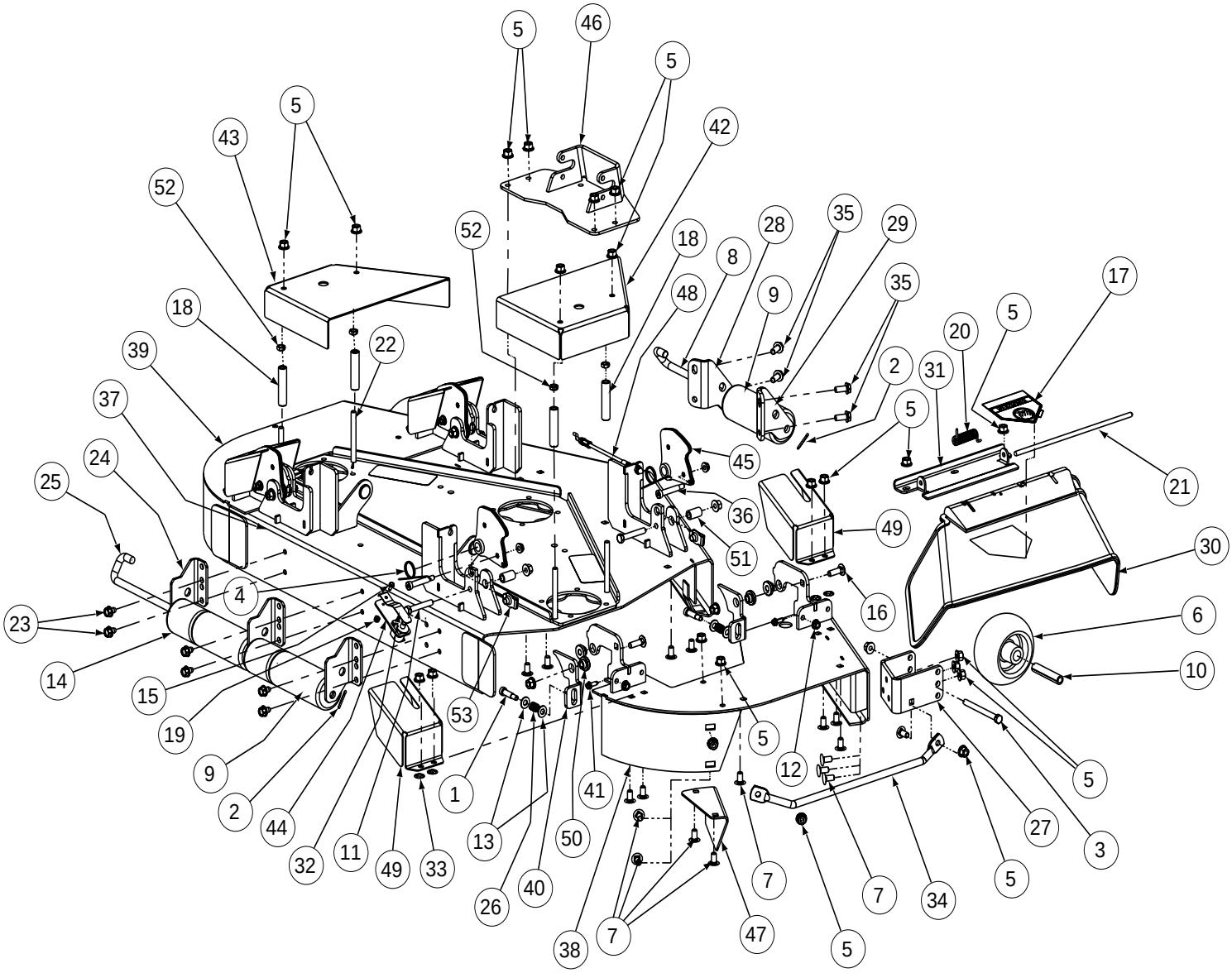

GD: 02000299-09/22/05

48" Fold Fabricated Cutter Deck - Parts List for Figure 2

Ref. No.	Part No.	Description	Qty.
1	01009459	Shoulder Bolt, .375 x 1.50	4
2	00003107	Cotter Pin, .125 Dia. x 1.0	2
3	00011925	Hex Cap Screw, 3/8-16, 3.75	2
4	02001383	Torsion Spring	4
5	00022560	Hex Nut Flange Lock, 3/8-16	39
6	01000343	Complete Wheel, 5.00 Dia	2
7	01000372	Carriage Bolt, 3/8-16 x .75 Lg	25
8	01000375	Roller Pin, 1/2 Dia x 7.31 Lg	1
9	01000385	Front Roller	3
10	01000398	Wheel Spacer	2
11	00011861	Hex Cap Screw, 3/8-16 x 2.50	4
12	01000635	Hex Flange Lock Nut, 5/16-18	8
13	00012158	Flat Washer, 3/8	8
14	01001169	Roller	2
15	01001864	Screw, TT, 10-24, .5	2
16	01002010	Carriage Screw, 3/8-16 x 1.25	4
17	01002166	Decal, Danger Hands and Feet	1
18	01003245	Spacer, .39 x .625 x 2.75	4
19	00006194	Lock Nut, #10-24	2
20	01003253	Torsion Spring, 0.4 ID x 2.16 LG	1
21	01003254	Chute Deflector Rod	1
22	01008049	Carriage Bolt, 3/8-16, 4.0	4
23	01004304	Hex Index Washer Screw, 3/8-16, .05	6
24	01005364	Fabricted Deck Roller Mount Bracket	3
25	01004751	Roller Rod	1
26	01003574	Lift Handle Spring	4
27	01005260	Front Anti-Scalp Wheel Mount Bracket	2
28	01005256	Left Hand Front Roller Mount Bracket	1
29	01005258	Right Hand Front Roller Mount Bracket	1
30	01006693	Deflector Chute	1
31	01008226	Chute Deflector Bracket	1
32	01008042	Spring Retainer	2
33	01008225	Push Retainer, 3/8	8
34	01008644	Fabricated Deck Finger Guard	1
35	01009243	Self Tapping Screw, 3/8-16 x 0.875	4
36	02001384	Shoulder Bolt 3/8 x 1.75	4
37	02001344	Fab Fold Deck Weldment	1
38	02001375	Fab Fold Wing Weldment, RH	1
39	02001378	Fab Fold Wing Weldment, LH	1
40	02001386	Pull Fold Hinge Lock	4
41	01000629	Screw, TT, 1/4-20 x .75	4
42	01010137	Belt Cover, RH	1
43	01010139	Belt Cover, LH	1
44	02001382	Handle Control Bracket	2
45	02000152	Lift Cable Bracket Weldment	4
46	02001936	Front Lift Bracket Weldment	1
47	02000381	Chute Baffle	1
48	02000389	Lift Cable	4
49	02000625	Lift Wing Shield	4
50	02000637	Spacer, 1.00 x .38 x .63	8
51	02001385	Pivot Spacer	4
52	01002511	Nut, 3/8-16, Jam	4
53	01003947	U-Nut, 3/8-16, .75	4

48" Fold Fabricated Deck Spindle Assembly - Figure 3

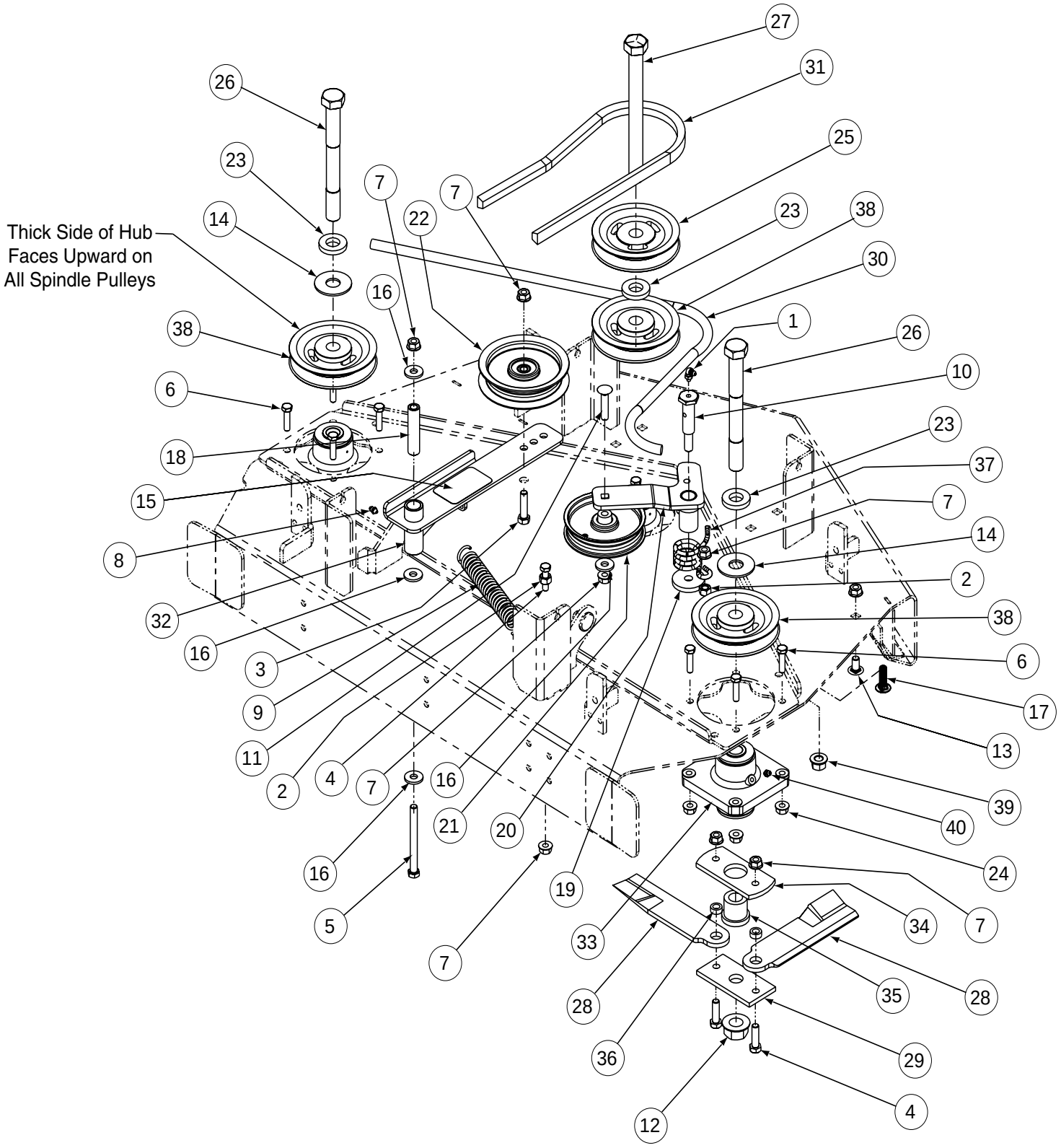

GD: 02000298-03/23/05

48" Fabricated Deck Spindle Assembly - Parts List for Figure 3

Ref. No.	Part No.	Description	Qty.
1	00012226	Grease Fitting, 1/4-28 90 Deg.	1
2	00006131	Hex Nut 3/8-16	2
3	00011438	Hex Cap Screw, 3/8-16 x 1-1/2	1
4	00011444	Hex Cap Screw, 3/8-16 x 1-1/4	7
5	00011925	Hex Cap Screw, 3/8-16, 3.75	1
6	00013116	Hex Cap Screw, 5/16-18 x 1-1/4	12
7	00022560	Hex Nut, 3/8-16, Lock Flange	12
8	00060078	Grease Fitting, 1/4-28 x 3/16	1
9	01000199	Spring Extension, 1.0 OD x 5.125	1
10	01000302	Shoulder Screw, 7/16-14	1
11	01000364	Hex Carriage Screw, 3/8-16, 1.75	1
12	01000380	Hex Flange Nut, 3/4-16	3
13	01000372	Carriage Bolt, 3/8-16 x .75	1
14	01000392	Flat Washer, .781 ID, 2.00 OD, .105	2
15	01006382	Decal, Idler Location	1
16	01000723	Flat Washer, .406 ID, 1.0 OD, .105	4
17	01002010	Carriage Screw, 3/8-16 x 1.25	1
18	01003245	Spacer, .39 ID x .625 OD x 2.75	1
19	01003269	Flat Washer, 7/16 ID x 1.75 OD x .25	1
20	01005737	Idler Arm Assembly, Deck Spindle	1
	01000308	Bearing	2
21	01004081	Flat Pulley with Flanges	1
22	01004101	Idler Pulley, 4.06 OD w/Deep Flange	1
23	01004187	Flat Washer, .760 ID x 1.50 OD x .25	3
24	01000635	Hex Nut, 5/16-18, Lock Flange	12
25	01005202	V-Pulley, 4.75 OD	1
26	01005213	Hex Cap Screw, 3/4-16, 7.00	2
27	01008542	Hex Cap Screw, 3/4-16, 7.50	1
28	01010127	Blade, Short Fold	6
29	01010132	Blade Center Connector	3
30	02000154	V-Belt, A-Section	1
31	02000277	V-Belt, B-Section	1
32	02000818	Idler Arm Weldment	1
	01000308	Bearing	2
33	02000792	Spindle Assembly	3
34	02000796	Blade Upper Mount Plate	3
35	02000798	Blade Spacer	3
36	02000799	Spacer, .385 ID x .625 OD x .25	6
37	732-3067	Idler Torsion Spring	1
38	02000859	V-Pulley, 4.60 OD	3
39	02000948	Nut, 7/16-20, FlangeLock	1
40	02000945	Grease Fitting	3

Drive Assembly - Figure 4

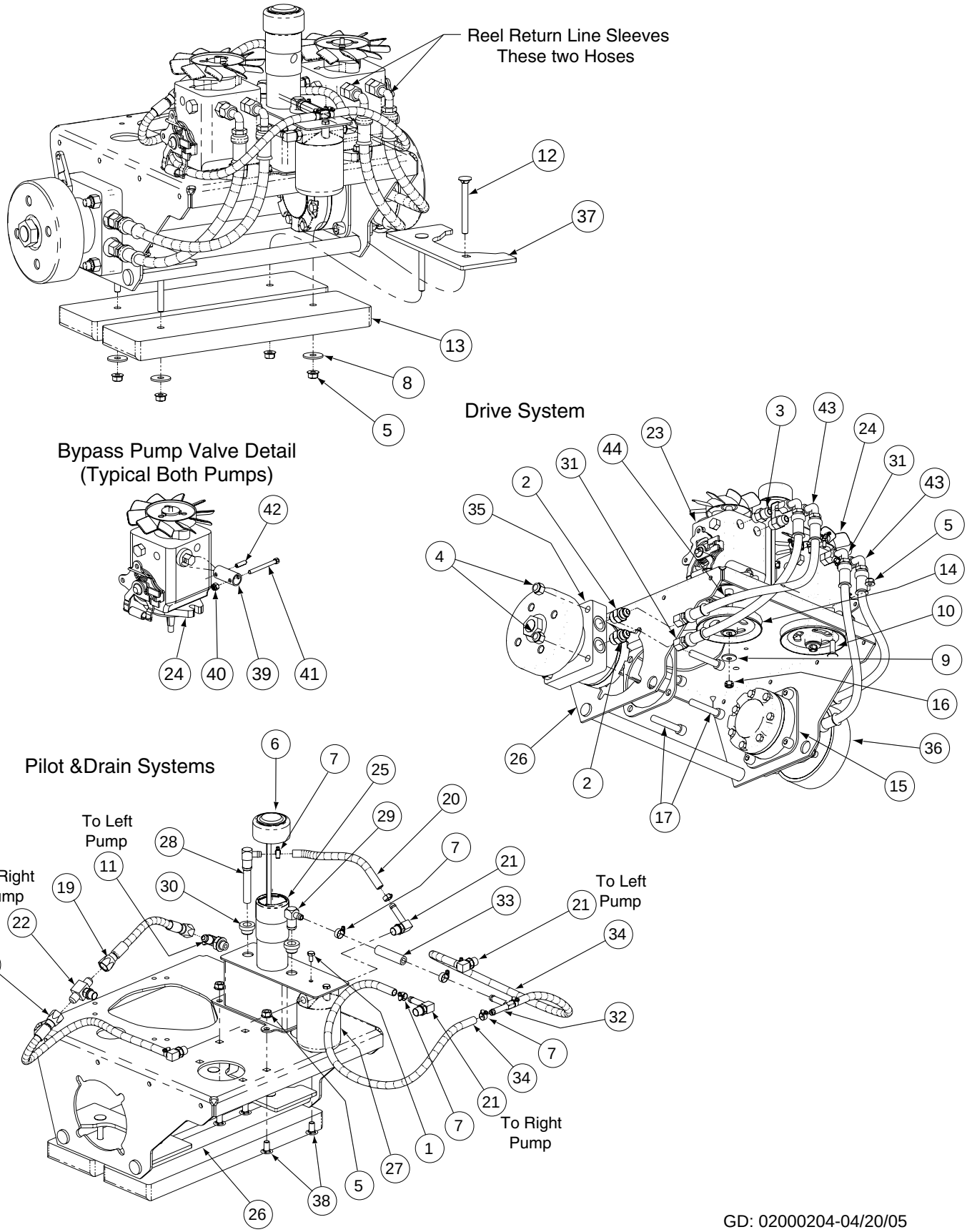

GD: 02000204-04/20/05

Drive Assembly - Parts List for Figure 4

Ref. No.	Part No.	Description	Qty.
1	00012133	Hex Cap Screw, 1/4-20 x 1/2	2
2	00012288	Fitting 1/2 x 3/4 - O Ring	4
3	00012426	Fitting 1/2 x 3/4 - O Ring to Flare	4
4	00012428	Lock Nut, Nylon Insert, 1/2-13	8
5	00022560	Flange Lock Hex Nut, 3/8-16	12
6	02000821	Cap, Hydro Oil Tank	1
7	01000215	Hose Clamp	9
8	01000872	Flat Washer, .411 x 1.25 x .100	4
9	01000942	Bell Washer, .396 x 1.14 x .095	2
10	01002010	Carriage Screw, 3/8-16 x 1.25	4
11	01002602	Elbow Fitting, 3/8 x 3/8	1
12	01002750	Carriage Bolt, 3/8-16 x 3.5 Lg	4
13	01003789	Bar Weight	2
14	01006799	Hydro Pulley Pump	2
15	01006948	Motor Plate	2
16	01007309	Hex Nut, 3/8-24	2
17	01008036	Socket Head Capscrew, 1/2-13; 2-3/4	8
18	02000194	Hose Assembly Inlet Pump	1
19	02000195	Hose Assembly Inlet Connector	1
20	02001232	Drain Hose, 3/8	1
21	02000198	Fitting, 90 Degree O-Ring	4
22	02000199	Tee Fitting, O-Ring	1
23	02000228	Hydro Pump. RH	1
24	02000229	Hydro Pump, LH	1
25	02000263	Hydro Tank Weldment	1
26	02000271	Engine Mount Weldment	1
27	02000276	Filter Head 1/2	1
	02000951	Filter	1
28	02000294	Elbow Fitting, Tube Steel	1
29	02000295	Elbow Fitting, w/o Tube Steel	1
30	02000296	Grommet Fitting, .54 ID x .78 OD	2
31	02000297	Pressure Hose Assembly	2
32	02000382	Tee Fitting	1
33	02000383	Hose, 3/8	1
34	02000384	Hose, 3/8	2
35	02000391	Hyd. Motor, White Right Hand	1
36	02000392	Hyd. Motor, White Left Hand	1
37	02000773	Deck Plate	2
38	01000372	Carriage Bolt, 3/8-16 x 0.75	4
39	02000693	Bypass Pump Adaptor Assembly	2
40	00012152	LockNut, 1/4-20, Nylon Insert	2
41	00019962	Socket Head Capscrew, 1/4-20 x 2-1/2	2
42	02000863	Roll Pin, .25 x .875	2
43	02000947	Pressure Hose Assembly, Short	2
44	00020628	Key, 3/16 x 7/8	2
45	00012529	Reel Return Line Sleeve, 1.25	2

Brake Assembly - Figure 5

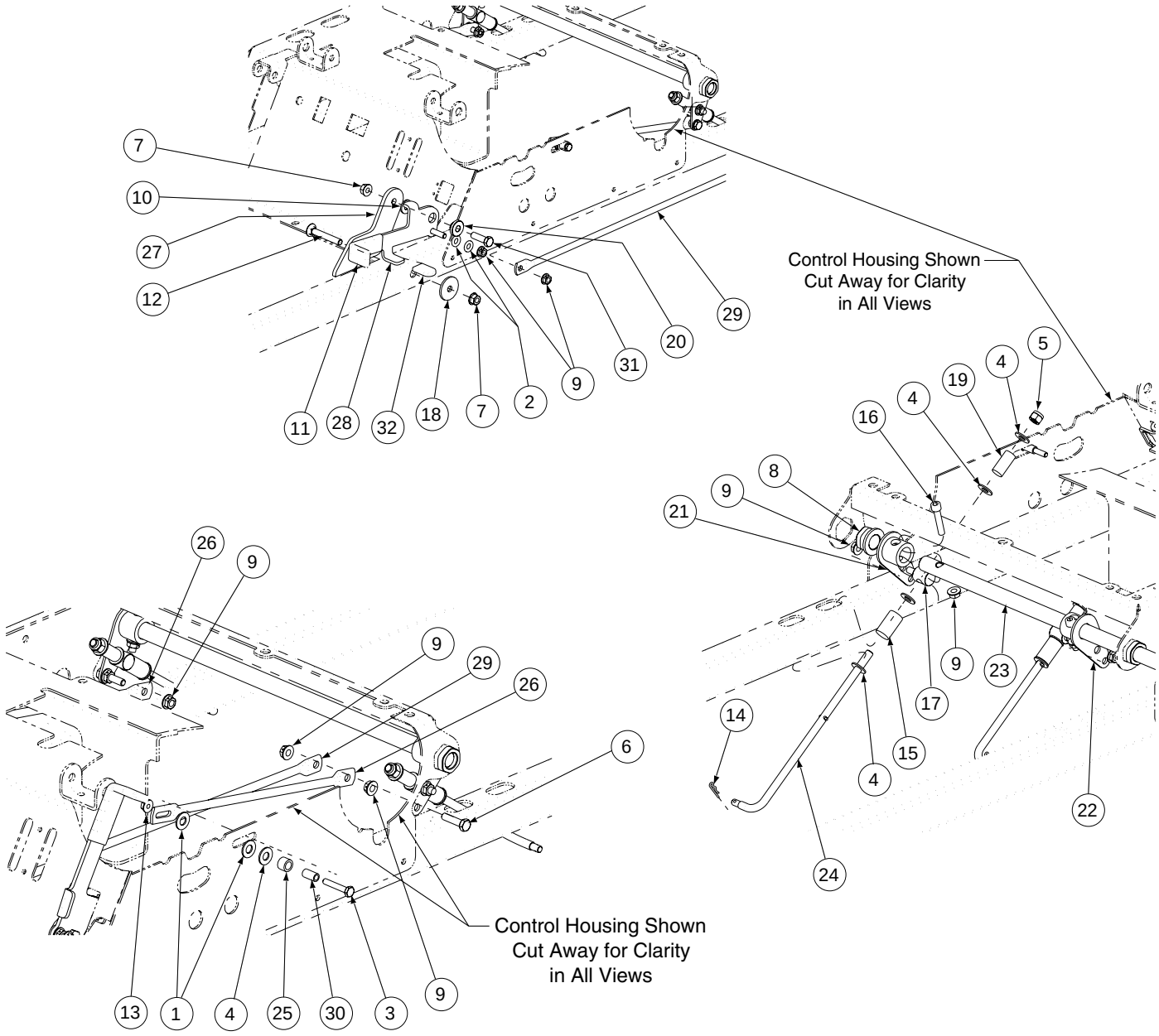

GD: 02000208-05/31/05

Brake Assembly - Parts List for Figure 5

Ref. No.	Part No.	Description	Qty.
1	00005530	Flat Washer, 3/8 Nylon	4
2	00009812	Flat Washer, 5/16	2
3	00011446	Cap Screw, 1/4-20 x 1.50, Grade 5	2
4	00012158	Washer	10
5	00012173	Nylock Insert Lock Nut, 3/8-16	2
6	00013116	Hex Cap Screw, 5/16-18 x 1-1/4	2
7	00022560	Hex Nut, Flange Lock, 3/8-16	2
8	741-0598	Hex Flange Bearing, .752 ID	2
9	01000635	Nut, Lock, HexFlange, 5/16-18	10
10	01000391	Flat Washer, .385 ID x .870 OD x .092	1
11	01001714	Control Sleeve, Drive Black	1
12	01001928	Carriage Bolt, 3/8-16, 2.50	1
13	01002766	Nut, 1/4-20, Hex Flange Lock	2
14	01002771	Cotter Pin, .072 x 1.12 Lg	2
15	01003574	Neutral Brake Spring	2
16	01008600	Socket Head Capscrew, 5/16-18 x 1.50	2
17	01009219	Pivot Brake Joint	2
18	01009253	Washer, 5/16-18	1
19	02001335	Compression Spring, .58 OD x 1.45LG	2
20	738-0372B	Spacer, 1.0 x .38 x .38	1
21	02000283	Input Brake Arm Assembly	1
22	02000285	Output Brake Arm Assembly	1
23	02000286	Pivot Brake Shaft	1
24	02000287	Steering Brake Rod	2
25	02000622	Spacer, .380 x .563 x .405 Lg.	2
26	02000623	Steering Lock Rod	2
27	02000628	Brake Handle Mounting Plate	1
28	02000633	Brake Handle Assembly	1
29	02000634	Brake Link Rod	1
30	02000697	Spacer, .259 x .375 x .707 Lg.	2
31	01000369	Hex Cap Screw, 3/8 -16 x 1.25	1
32	00011211	Grip, Neutral Latch	1

Control Assembly- Figure 6

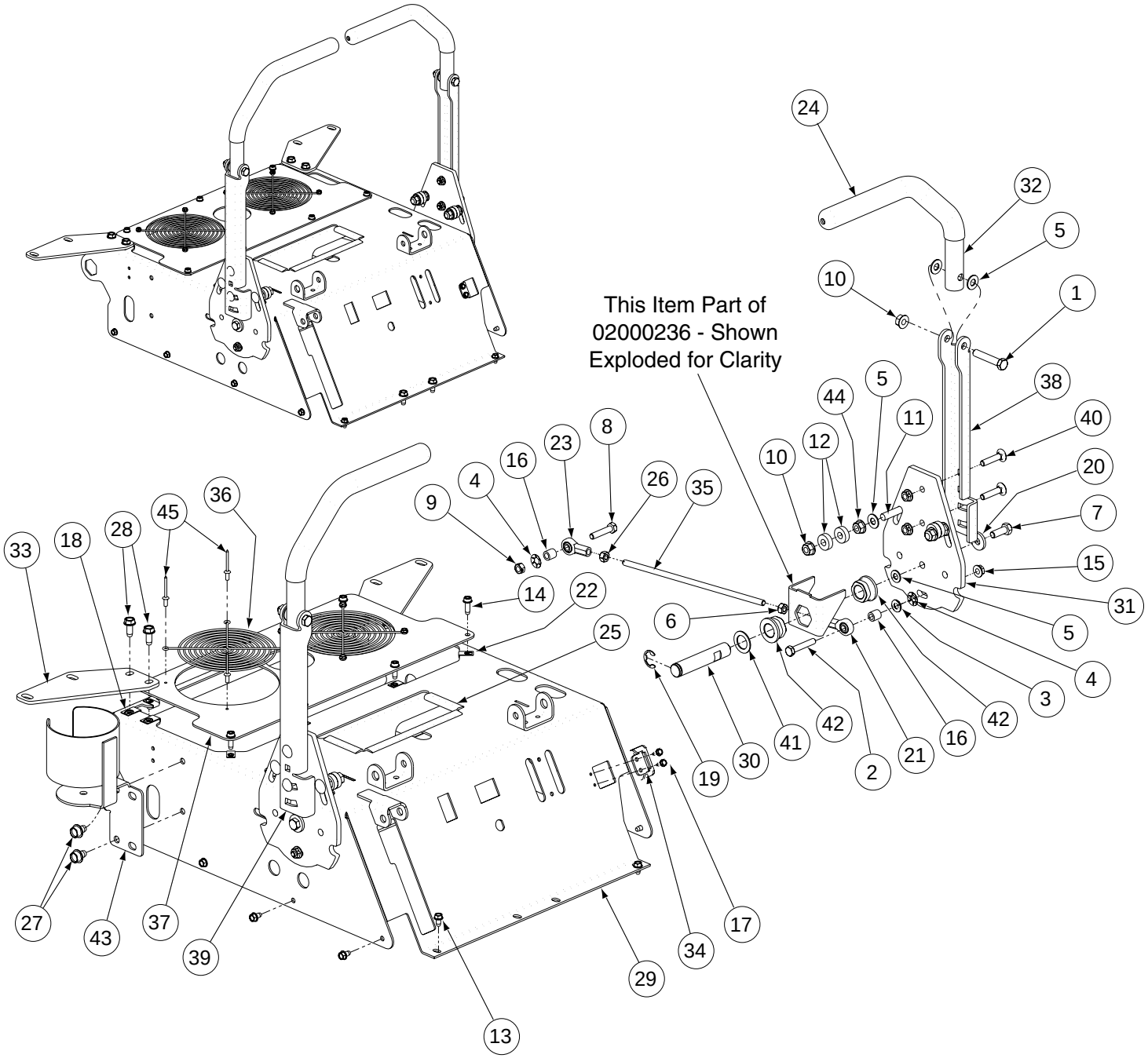

GD: 02000205-05/04/05

Control Assembly - Parts List for Figure 6

Ref. No.	Part No.	Description	Qty.
1	00002528	Hex Cap Screw, 3/8-16 x 2	2
2	00006129	HHCS, 5/16-18, 1-3/4	2
3	00009812	Flat Washer, 5/16	2
4	02000300	Push Retainer, 5/16	4
5	00012158	Washer	10
6	00012167	Hex Nut, 5/16-24	2
7	00012171	Hex Cap Screw, 3/8-16 x 1.00	2
8	00012382	Hex Cap Screw, 5/16-18 x 1-1/2	2
9	00022547	Nut, 5/16-18, Center Lock	2
10	00022560	Flange Lock Hex Nut, 3/8-16	6
11	01000364	Carriage Screw 3/8-16 x 1.75	4
12	00071691	Spacer, Control Rod	8
13	01000628	Screw, TT, 1/4-20, 0.5, Hex Index Washer	10
14	01000629	Screw, TT, 1/4-20, 0.75, Hex Index Washer	7
15	01000635	Nut, Lock, HexFlange, 5/16-18	6
16	01000799	Spacer, .265 x .500 x .562	4
17	01001864	Screw, TT, 10-24, .5	2
18	01003563	U-Nut, 5/16-18	4
19	01003994	E Clip, 3/4 Dia.	2
20	01007238	Flat Washer, .385 ID x 1.00 OD x .145	2
21	01008410	Rod End, 5/16, Right Hand	2
22	01008539	U-Nut, 1/4-20	7
23	01008551	Rod End, 5/16, Left Hand	2
24	01008552	Lap Bar Grip	2
25	01008572	Battery Edge Trim	3
26	01008576	Hex Nut, 5/16-24, Left Hand	2
27	01004304	Self Tapping Screw, 5/16-18 x 1/2	2
28	01008764	Hex Washer Screw 5/16-18 x .750	4
29	02000237	Control Housing Assembly	1
30	02000238	Steering Input Shaft	2
31	02000240	Steering Pivot Plate	2
32	02000327	Pivot Handle Control Tube	2
33	02000330	Tank Front Mounting Plate	2
34	02000124	Brake Switch Mounting Bracket	1
35	02000359	Steering Link Rod	2
36	02000372	Fan Cover	2
37	02000647	Hydro Service PLate	1
38	02000662	Lapbar Pivot Bracket, LH	1
39	02000664	Lapbar Pivot Bracket, RH	1
40	710-0262	Carriage Bolt, 5/16-18 x 1.50	4
41	02001336	Flat Washer, 1.125 ID x .75 OD x .005	2
42	741-0598	Hex Flange Bearing, .752 ID	4
43	02000340	Cup Holder Assembly	1
44	00006131	Hex Nut, 3/8-16	4
45	02001457	Pop Rivet, 3/16 Alum.	8

23HP Kohler Engine Assembly - Figure 7

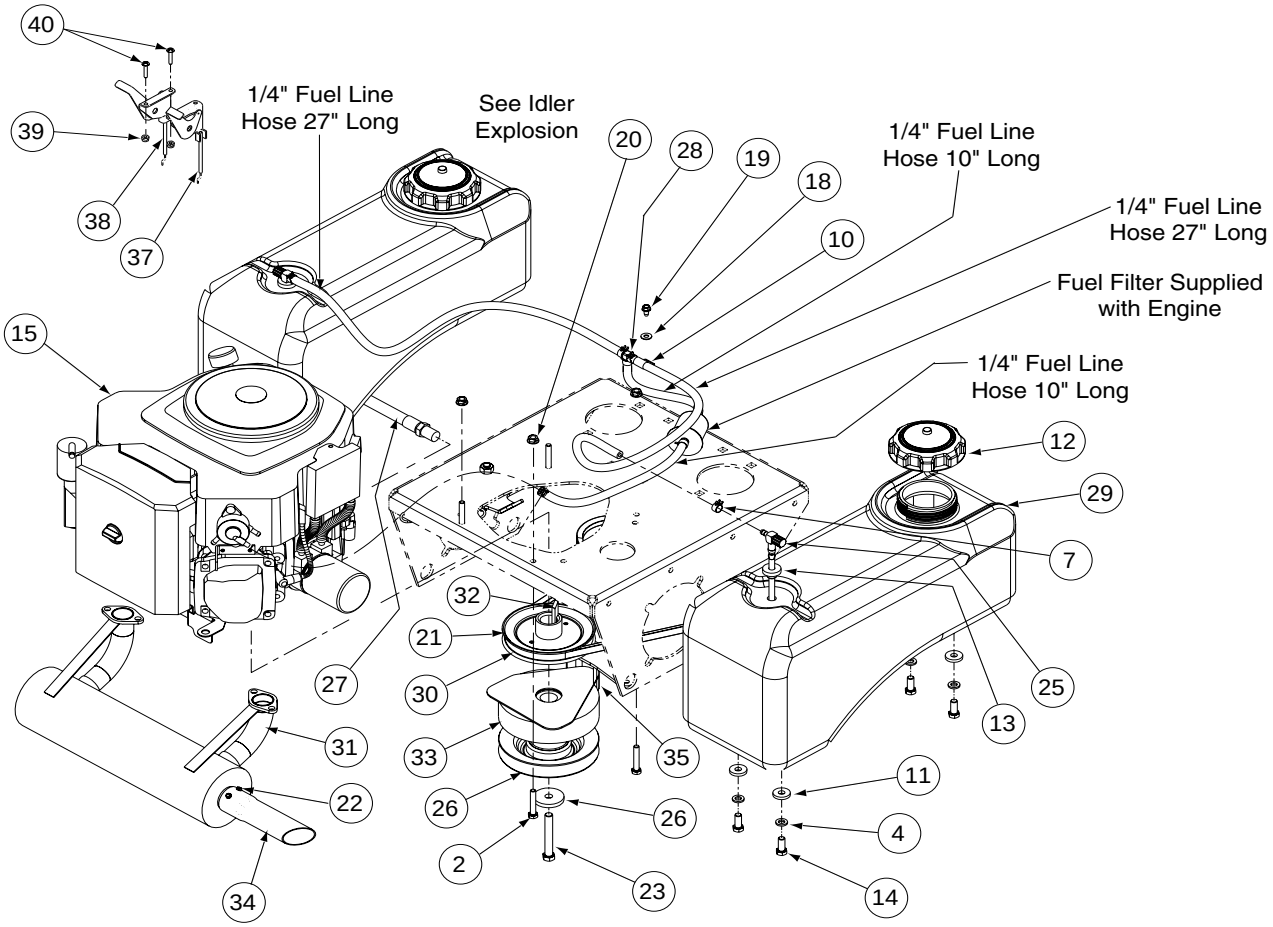

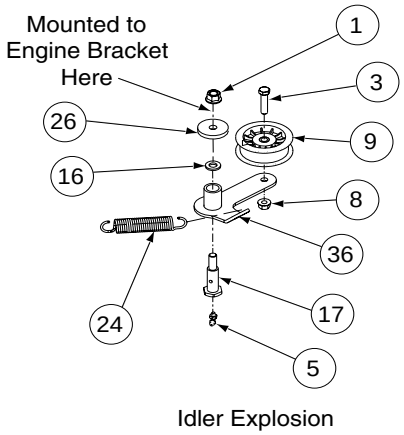

Idler Explosion

Description	Part Number
Air Filter	KH-24-083-03-S
Pre Filter	KH-24-083-05-S
Fuel Filter	KH-24-050-10-S
Oil Filter	KH-12-050-08
Spark Plug	759-3336

GD: 02000203-05/24/05

23HP Kohler Engine Assembly - Parts List for Figure 7

Ref No	Part No.	Description	Qty.
1	02000948	Nut, 7/16-20, Flange Lock	1
2	00006129	HHCS, 5/16-18, 1-3/4	4
3	00010980	Hex Head Cap Screw, 3/8-16 x 1.50	1
4	00012157	Lock Washer, 3/8	8
5	00012226	Grease Fitting, 90°	1
6	--	Hose, 1/4" Fuel Line in inches	74
7	00012235	Clamp, Union	8
8	00022560	Nut, Hex 3/8-16 Flange Lock	1
9	00030782	Idler Pulley w/ Adaptor	1
10	00031081	Clamp, 1/2 Tubing	1
11	00083192	Idler Washer	8
12	01000069	Fuel Cap, 3.5	2
13	01000281	Grommet, Fuel Tank	2
14	01000368	Hex, Cap Screw, 3/8-16, .88	8
15	02000427	23HP Kohler Engine	1
16	01000393	Flat Washer, .469 ID, .875 OD, .105	1
17	01000505	Shoulder Bolt	1
18	01000600	Flat Washer, 1.4 x .630 x .0515	1
19	01000629	Screw, TT, 1/4-20, 0.75, Hex Index Washer	1
20	01000635	Nut, Lock, HexFlange, 5/16-18	4
21	01000737	Trans Drive Pulley	1
22	01000811	Screw, 8-32 x 0.375	2
23	01000813	Hex Head Cap Screw, 7/16-20 x 3.00	1
24	02001245	Extension Spring, .865 OD x 4.18 lg	1
25	01003116	Fuel Pickup Fitting	2
26	01003269	Flat Washer, 7/16 ID x 1.75 OD x .25	2
27	01003283	Oil Drain Hose	1
28	01003473	Tee Fitting, Fuel	1
29	01004350	Fuel Tank	2
30	01005010	V Belt, A Section x 47.3	1
31	01006566	23HP Kohler Exhaust	1
32	01007533	Key, 1/4 x 1/4 x 2.75	1
33	01008544	Clutch Electric, Ogura JD08	1
34	01008623	Straight Exhaust Pipe	1
35	01008640	Clutch Retainer Assembly	1
36	01009911	Idler Arm Assembly	1
37	02000387	Throttle Control Cable	1
38	02000388	Choke Control Cable	1
39	01009931	Nut, #10-24	2
40	01008046	Screw,TT,Hex Index Washer #10-20,.75	2

Note: Engine Oil 10W40

23HP Electrical Assembly Kohler - Figure 8 & Parts List

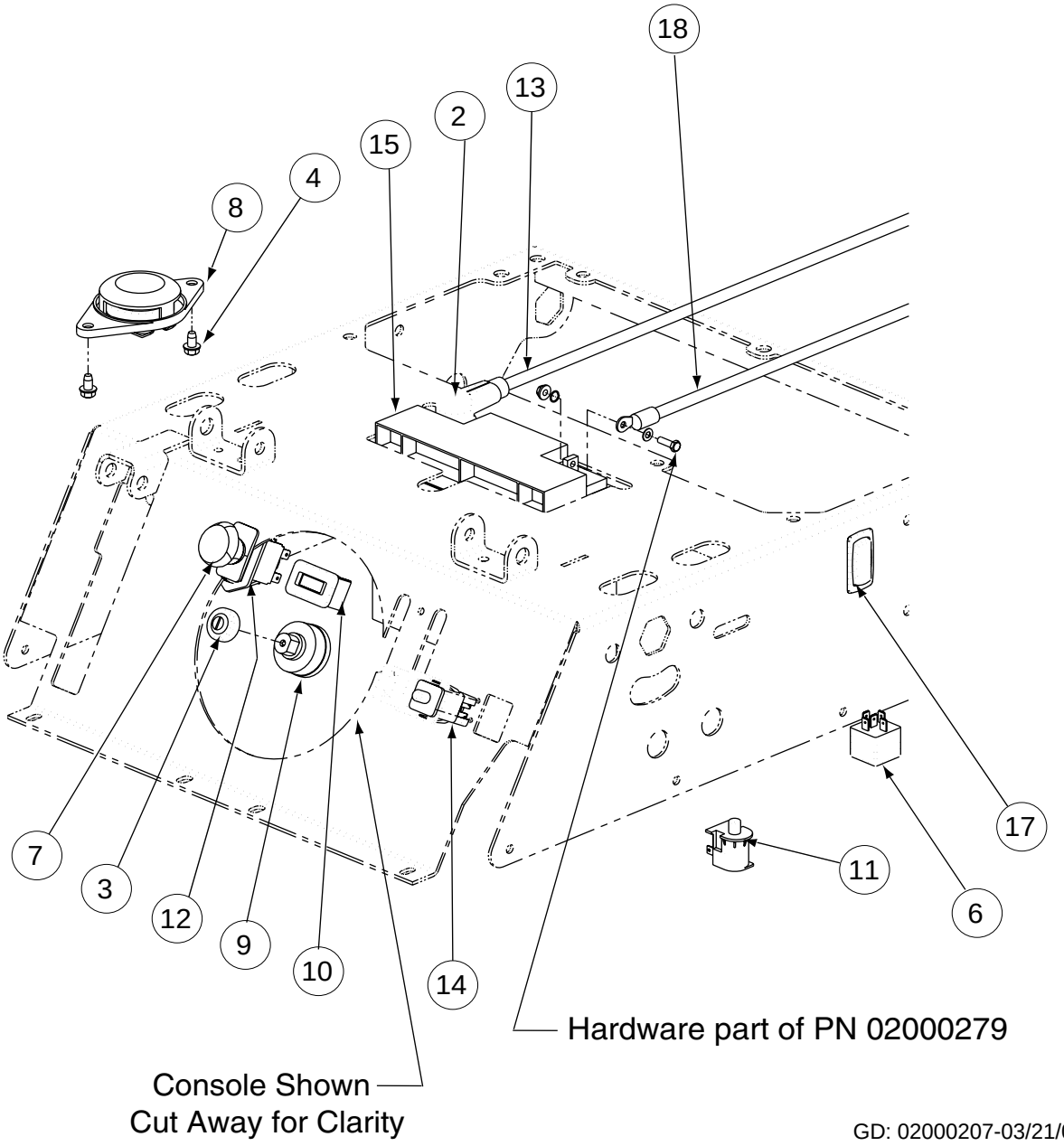

GD: 02000207-03/21/05

Ref. No.	Part No.	Description	Qty.	Ref. No.	Part No.	Description	Qty.
1	00012470	Cable Tie, 3/16 x .05 x 7.4	4	10	01005389	Meter, Hour	1
2	00013258	Boot, 1" OD Rubber Battery-PST, Red	1	11	01008028	Snap Mounting Switch, NO	2
3	00032097	Nut, W/Cap, 5/8-32 Ignition	1	12	01009905	PTO Switch Bracket	1
4	01000628	Screw, TT, 1/4-20, 0.5, Hex Index Washer	2	13	02000684	Cable, Battery, Red, 31"	1
5	01001811	HourMeter Harness, (not shown)	1	14	02000024	Switch, Safety N.O./N.C.	1
6	01002251	Relay 12V 40A	1	15	02000279	Battery, Small 12CE18	1
7	01002111	Switch, Electric, PTO	1	16	02000386	Harness Assembly, (not shown)	1
8	01003277	Normally Closed Seat Switch	1	17	02000390	Actuator Harness Assembly, (not shown)	1
9	01003581	Switch, Ignition, 6 Pin	1	18	02000683	Cable, Battery, Black, 31"	1

48" Wheel Assembly - Figure 9 and Parts List

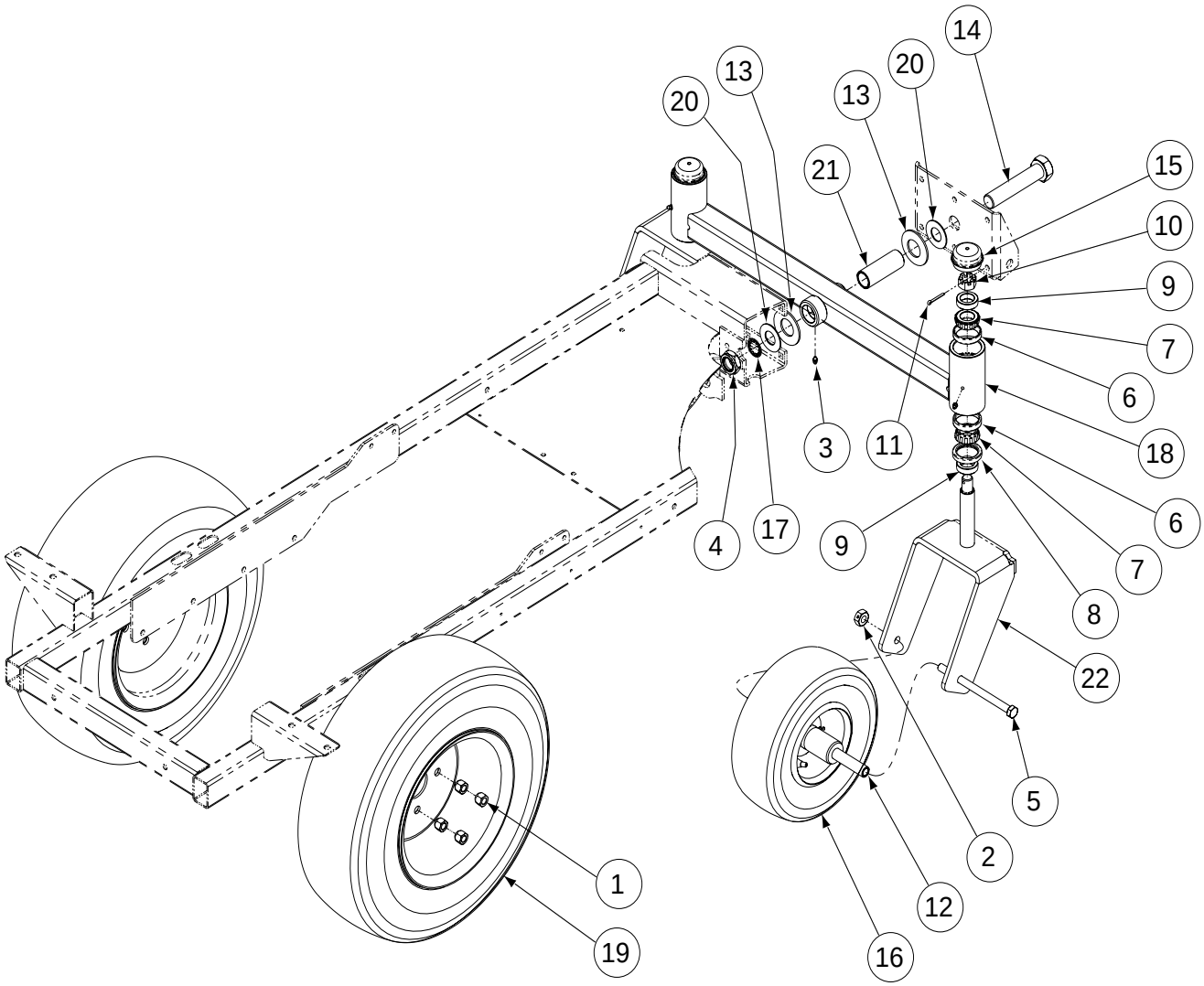

GD: 02000210-03/21/05

Ref. No.	Part No.	Description	Qty.	Ref. No.	Part No.	Description	Qty.
1	00012187	Lug Nut, 1/2-20	8	12	01004128	Wheel Spacer	2
2	00023287	Nut, 1/2-20, Center Lock	2	13	01006294	Bell Washer, 1.25 ID	2
3	00060078	Grease Fitting	3	14	01006309	Hex Cap Screw, 1-14 x 5.0	1
4	01000678	Nut, Jam, 1.0-14, Insert Lock	1	15	01006347	Grease Cap, 1.986 OD	2
5	01002611	HHCS, 1/2-20, 7.00	2	16	01006559	Wheel Assembly, 11 x 4-5.00	2
6	01002620	Cup Bearing	4	17	01009997	Retainer Extension, Self Locking	1
7	01002621	Bearing Cone	4	18	02000250	Straight Front Axle	1
8	01002622	Seal	2	19	02000274	Wheel, 21 x 7-10	2
9	01002624	Ring Seal	4	20	02000588	Flat Washer, 1.00 ID	2
10	01002626	Slotted Nut, 3/4-16	2	21	02000589	Spacer, 1.005 ID x 1.25 OD x 3.6	1
11	01002627	Cotter Pin, 5/32, 1.25	2	22	02000784	Yoke, Caster Wheel	2

Lift Assembly - Figure 10

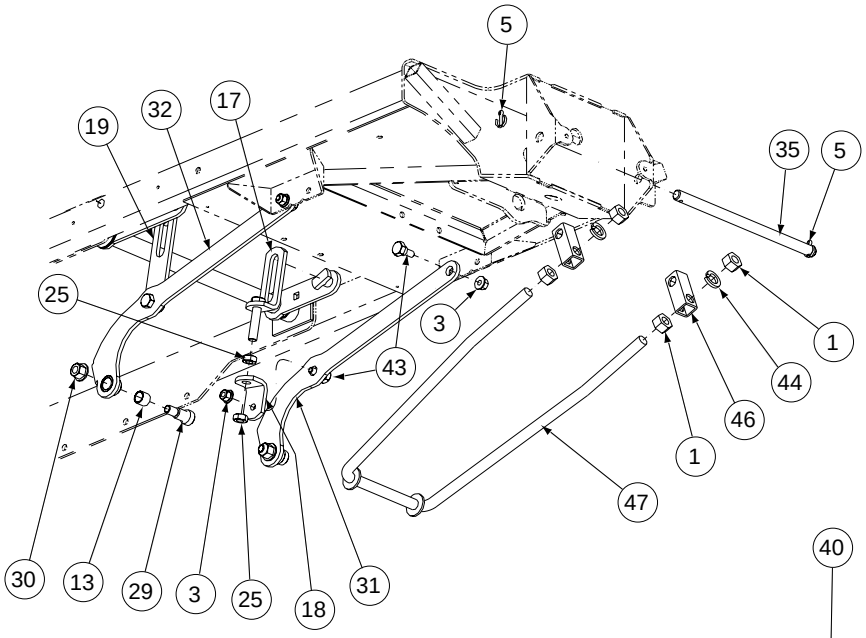

Front & Rear Lift Arm
Explosion

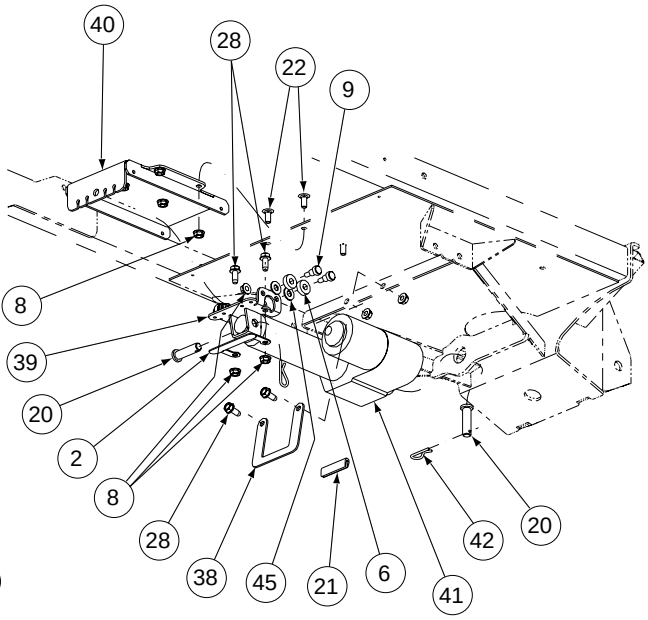

Wing Actuator Explosion

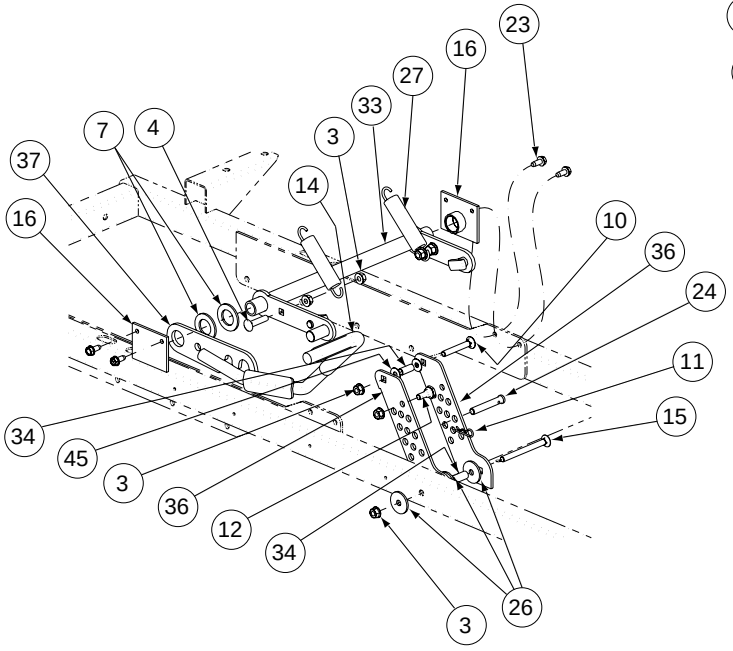

Rock Shaft & Index
Explosion

GD: 02000206-09/21/05

Lift Assembly - Parts List for Figure 10

Ref. No.	Part No.	Description	Qty.
1	00011807	Hex Nut, 5/8-11	4
2	02000877	Cable Bracket	1
3	00022560	Flange Lock, Hex Nut, 3/8-16	11
4	00030276	Carriage Bolt 3/8-16 x 1.50	2
5	00060018	Cotter Pin, 3/16 x 1-1	2
6	00071691	Spacer, Control Rod	4
7	00072586	Washer	2
8	01000635	Nut, Lock, HexFlange, 5/16-18	12
9	00013733	Shoulder Bolt, 3/8 x 3/8	4
10	01001928	Carriage Bolt 3/8-16 x 2.50	1
11	01003537	Cotter Pin, .148 x 3.00	1
12	01004118	Shoulder Screw, .50 OD x 0.27	1
13	01000308	Bearing	2
14	01007561	Lift Handle Grip	1
15	01008049	Carriage Bolt, 3/8-16 x 4.00	1
16	01008477	Lift Hub Assembly	2
17	02000833	Upper Link Lift Assembly, Left Hand	1
18	01008183	Lower Lift Bracket, Left Hand	1
19	01008186	Link Lift PLate, Right Hand	1
20	01008203	Clevis Pin, .500 Dia. x 1.75 Lg.	2
21	01008572	Battery Edge Trim	1
22	00020508	Carriage Bolt, 5/16-18 x .75	4
23	01008620	Self Tapping Screw, 5/16-18 x 3/4	4
24	01008652	Clevis Pin, .438 Dia. x 2.625 Lg.	1
25	01008658	Jam Nut, 1/2-20	2
26	01009253	Washer, 5/16-18	3
27	01009635	Extension Spring, .98 OD x 5.00	2
28	01008764	Hex Head Cap Screw, 5/16-18 x 0.75	4
29	01009760	Shoulder Screw, 0.625 x 0.75	2
30	01010119	Nut, 1/2-13, Flangelock	2
31	02001978	Rear Lift Arm, LH	1
32	02001919	Rear Lift Arm, RH	1
33	02000336	Lift Shaft Assembly	1
34	02000337	Spacer, .375 x .5 x 1.176 Lg.	2
35	02000350	Front Lift Rod	1
36	02000352	Lift Index Plate	2
37	02000472	Lift Handle Assembly	1
38	02000652	Actuator Bracket	1
39	02000849	Actuator Mounting Bracket	1
40	02001982	Cable Mounting Bracket Assembly	1
41	02000660	Actuator	1
42	02000673	Hair Pin	2
43	02000393	Shoulder Screw, 3/8-16, .56 x .27	4
44	02000671	Lock Washer	2
45	00012158	Flat Washer, 3/8	6
46	02001907	Front Lift Rod Tube	2
47	02001913	Front Lift Rod	1

Seat Assembly- Figure 11 and Parts List

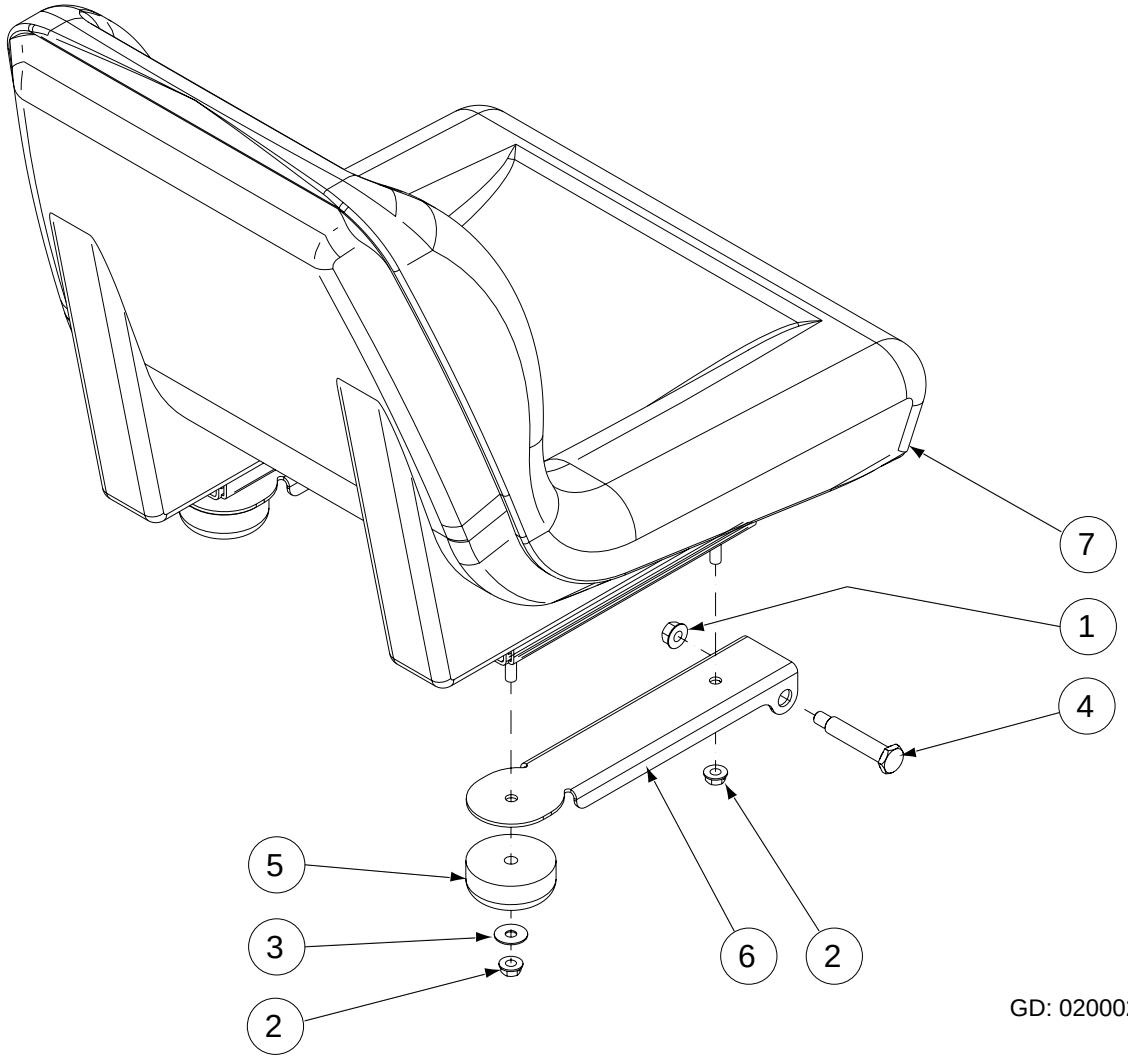

GD: 02000211-03/21/05

Ref. No.	Part No.	Description	Qty.
1	00022560	Flange Lock Hex Nut, 3/8-16	2
2	01000635	Hex Flange Lock Nut, 5/16-18	4
3	01000960	Belle Washer, .325 x .930 x .045	2
4	01002634	Shoulder Screw, .50x2.345, 3/8-16	2
5	01002753	Grommet, 2.5 OD x 1.0 Long	2
6	01008583	Seat Mounting Bracket	2
7	02000244	Seat	1

Decal Map

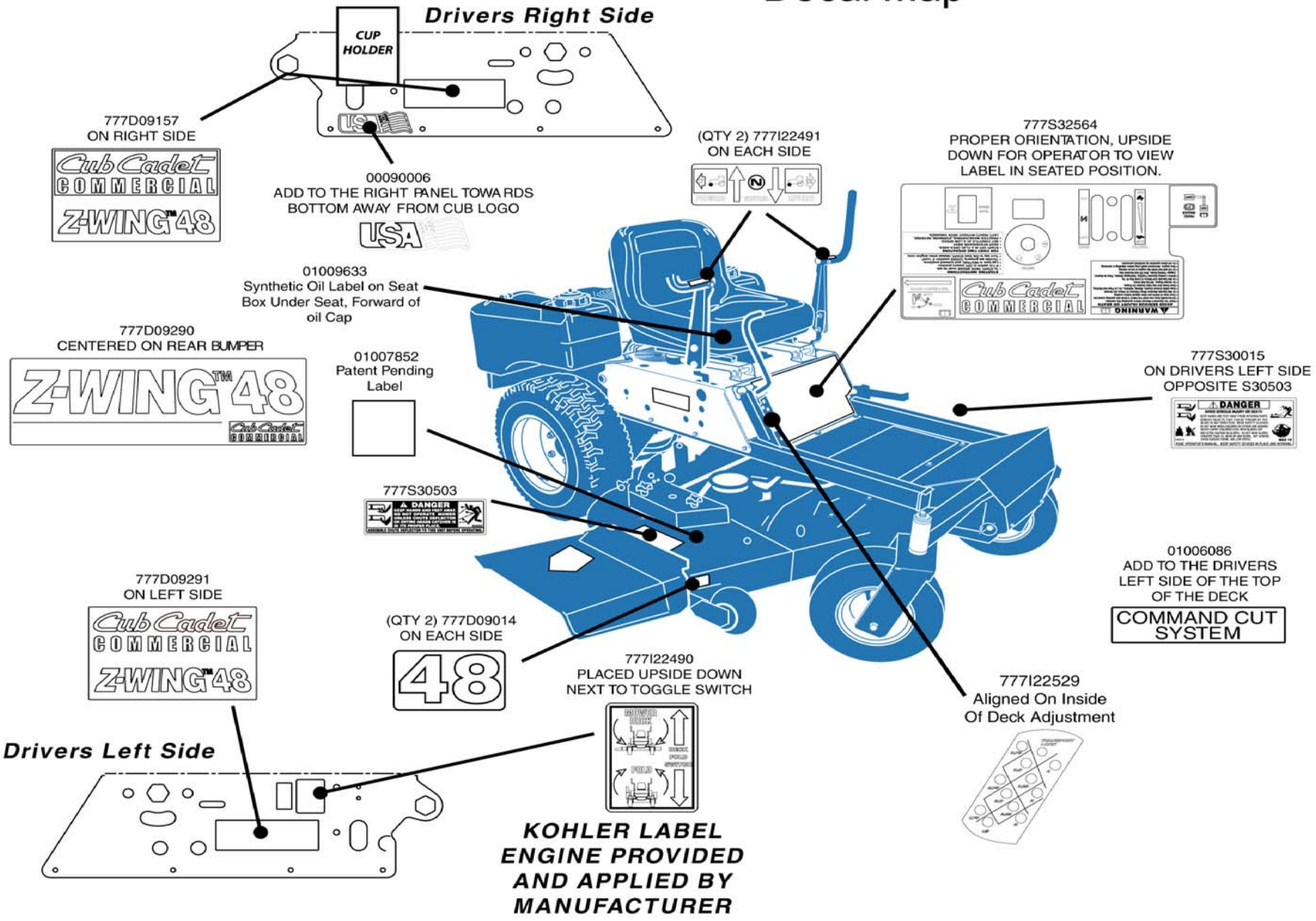
Drivers Right Side
CUP HOLDER
777D09157
ON RIGHT SIDE
Cub Cadet COMMERCIAL Z-WING 48
00090006
ADD TO THE RIGHT PANEL TOWARDS BOTTOM AWAY FROM CUB LOGO
USA
(QTY 2) 777I22491
ON EACH SIDE
777S32564
PROPER ORIENTATION, UPSIDE DOWN FOR OPERATOR TO VIEW LABEL IN SEATED POSITION.
01009633
Synthetic Oil Label on Seat Box Under Seat, Forward of oil Cap
777D09290
CENTERED ON REAR BUMPER
Z-WING 48
01007852
Patent Pending Label
777S30015
ON DRIVERS LEFT SIDE OPPOSITE S30503
DANGER
777S30503
DANGER
01006086
ADD TO THE DRIVERS LEFT SIDE OF THE TOP OF THE DECK
COMMAND CUT SYSTEM
777D09291
ON LEFT SIDE
Cub Cadet COMMERCIAL Z-WING 48
(QTY 2) 777D09014
ON EACH SIDE
48
777I22490
PLACED UPSIDE DOWN NEXT TO TOGGLE SWITCH
777I22529
Aligned On Inside Of Deck Adjustment
Drivers Left Side
KOHLER LABEL ENGINE PROVIDED AND APPLIED BY MANUFACTURER

Notes

Notes



Cub Cadet Commercial
P.O. Box 368023
Cleveland, OH 44136

Form No. 02000823 Rev. 05-5 09/22/2005