Cub Cadet COMMERCIAL

Hydrostatic Zero-Turn Commercial Riding Mower

Professional Turf Equipment

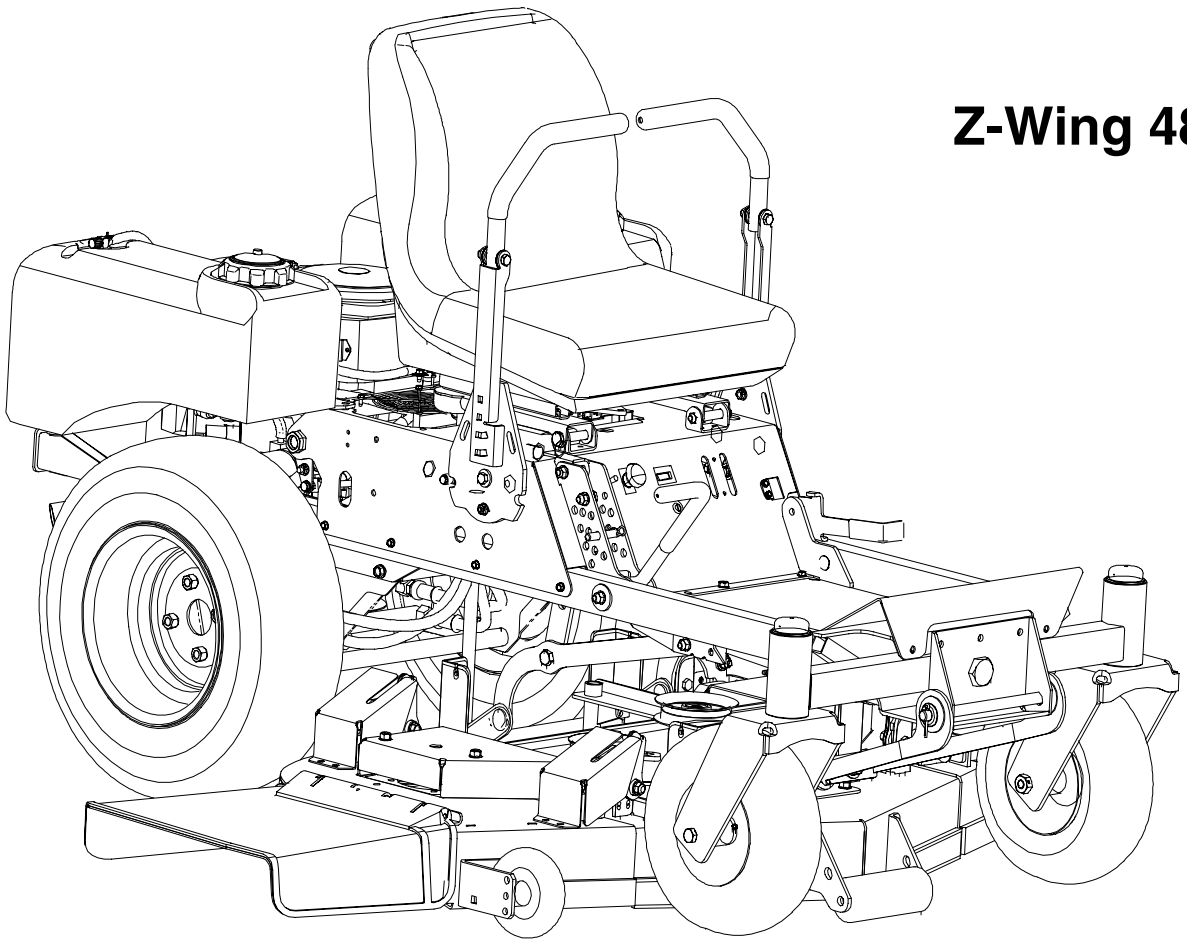

Z-Wing 48

ILLUSTRATED PARTS LIST

TABLE OF CONTENTS

Frame Assembly 3
48" Fold Fabricated Cutter Deck . . . . . 4 and 5
48" Spindle Assembly . . . . . 6 and 7
Drive Assembly . . . . . 8 and 9
Brake Assembly . . . . . 10 and 11
Control Assembly . . . . . 12 and 13
23HP Kohler Engine Assembly . . . . . 14 and 15
23HP Electrical Assembly Kohler 16
48" Wheel Assembly 17
Lift Assembly . . . . . 18 and 19
Seat Assembly 20

MODEL LISTED IN THIS MANUAL

23HP Tank,
53AI5BBY750

Frame Assembly- Figure 1 and Parts List

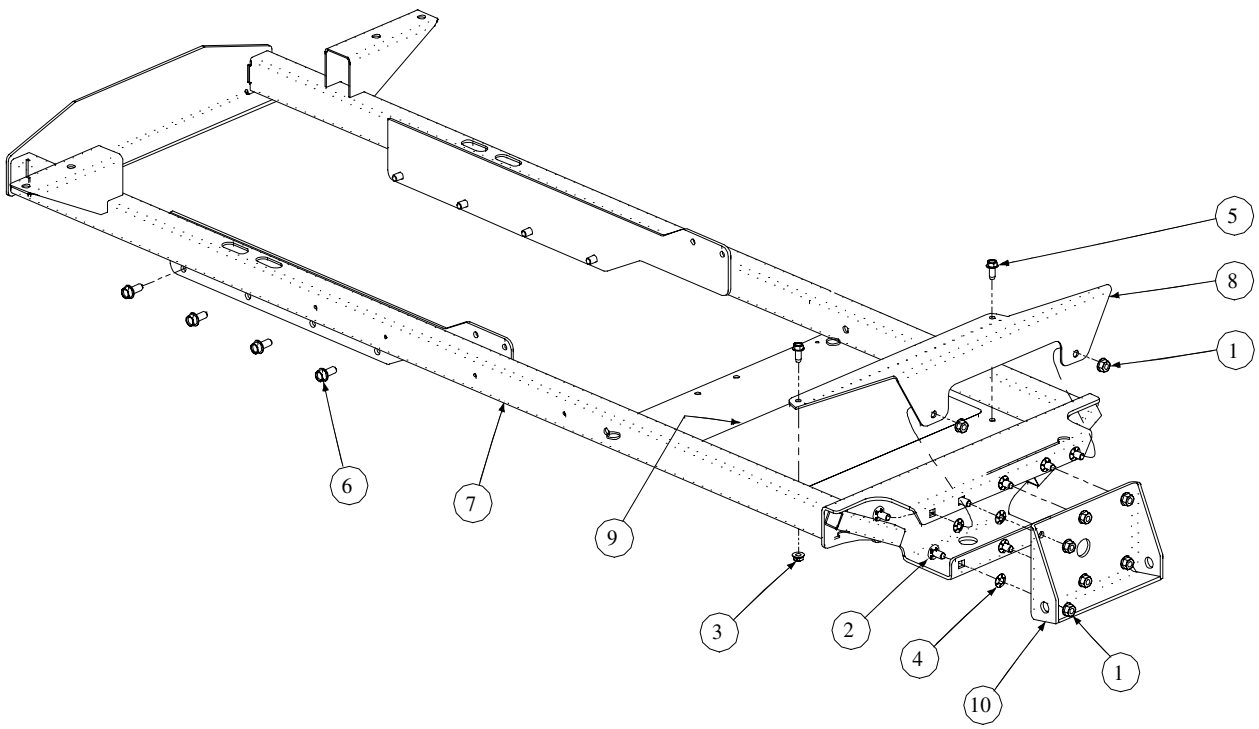

GD: 02000202-12/22/04

Ref. No.	Part No.	Description	Qty.
1	00022560	Flange Lock Hex Nut, 3/8-16	8
2	01000372	Carriage Bolt, 3/8-16 x .75 Lg	8
3	01000635	Hex Flange Lock Nut, 5/16-18	2
4	01008225	Push Retainer, 3/8	8
5	01008620	Self Tapping Screw 5/16-18 x .750	2
6	01008722	Self Tapping Screw 3/8-16 x .875	8
7	02000214	Frame Assembly	1
8	02000374	Foot Rest Bracket	1
9	02000670	Abrasive Pad	1
10	02000825	Front Axle Bracket Assembly	1

48" Fold Fabricated Cutter Deck - Figure 2

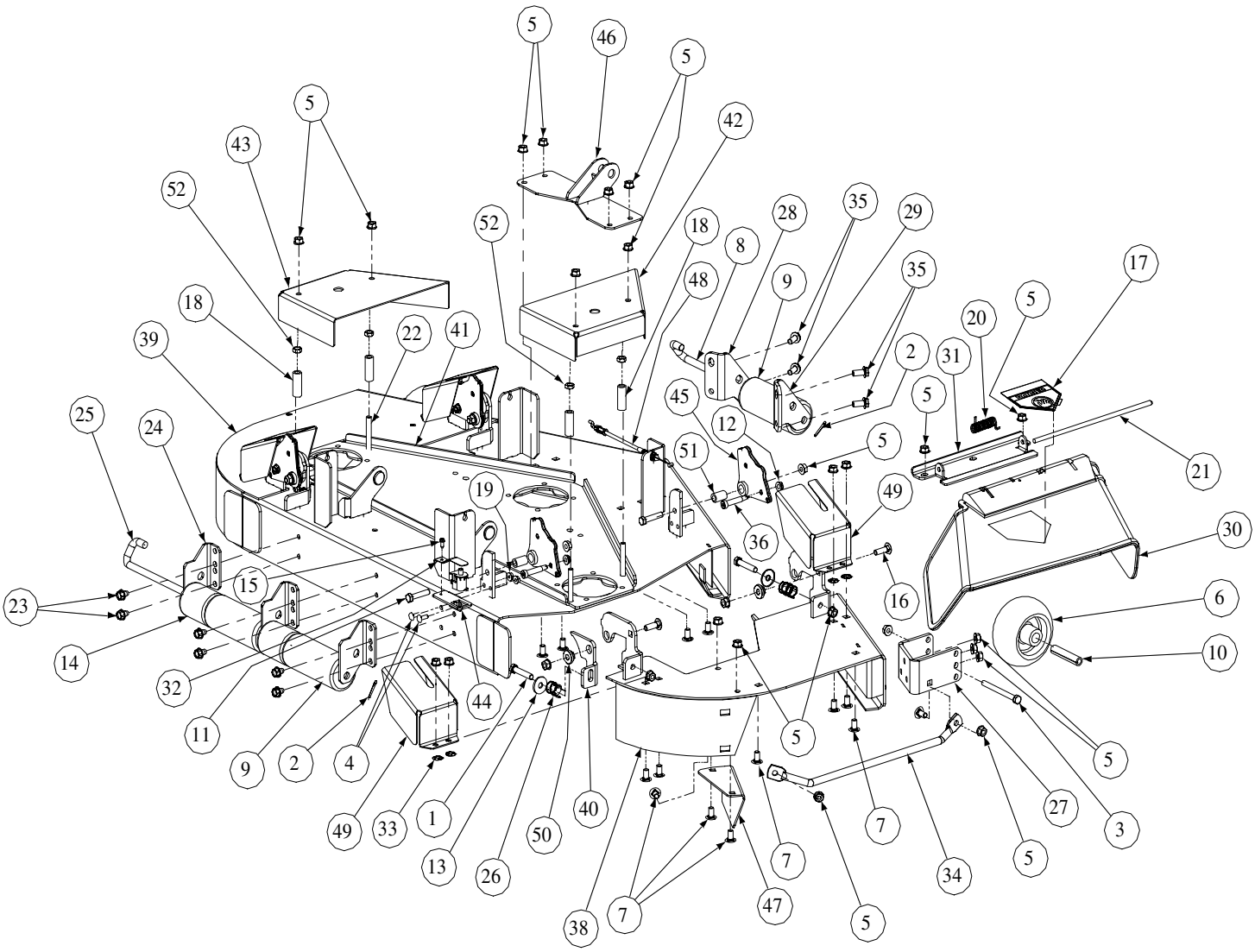

GD: 02000299-02/01/05

48" Fold Fabricated Cutter Deck - Parts List for Figure 2

Ref. No.	Part No.	Description	Qty.
1	00002528	Hex Cap Screw 3/8-16 x 2.00	4
2	00003107	Cotter Pin, .125 Dia. x 1.0	2
3	00011925	Hex Cap Screw, 3/8-16, 3.75	2
4	00017584	Carriage Bolt, 1/4-20 x .750	4
5	00022560	Hex Nut Flange Lock, 3/8-16	42
6	01000343	Complete Wheel, 5.00 Dia	2
7	01000372	Carriage Bolt, 3/8-16 x .75 Lg	24
8	01000375	Roller Pin, 1/2 Dia x 7.31 Lg	1
9	01000385	Front Roller	3
10	01000398	Wheel Spacer	2
11	01000512	Hex Cap Screw, 3/8-16 x 1.750	4
12	01000635	Hex Flange Lock Nut, 5/16-18	4
13	01000872	Flat Washer, .411 x 1.25 x .100	4
14	01001169	Roller	2
15	01001864	Screw, TT, 10-24, .5	2
16	01002010	Carriage Screw, 3/8-16 x 1.25	4
17	01002166	Decal, Danger Hands and Feet	1
18	01003245	Spacer, .39 x .625 x 2.75	4
19	01002766	Nut, 1/4-20, Hex Flange Lock	4
20	01003253	Torsion Spring, 0.4 ID x 2.16 LG	1
21	01003254	Chute Deflector Rod	1
22	01008049	Carriage Bolt, 3/8-16, 4.0	4
23	01004304	Hex Index Washer Screw, 3/8-16, .05	6
24	01005364	Fabricted Deck Roller Mount Bracket	3
25	01004751	Roller Rod	1
26	01004971	Lift Handle Spring	4
27	01005260	Front Anti-Scalp Wheel Mount Bracket	2
28	01005256	Left Hand Front Roller Mount Bracket	1
29	01005258	Right Hand Front Roller Mount Bracket	1
30	01006693	Deflector Chute	1
31	01008226	Chute Deflector Bracket	1
32	01008042	Spring Retainer	2
33	01008225	Push Retainer, 3/8	8
34	01008644	Fabricated Deck Finger Guard	1
35	01009243	Self Tapping Screw, 3/8-16 x 0.875	4
36	01009459	Shoulder Bolt 3/8 x 1.50	4
37	01009957	Fab Fold Deck Weldment	1
38	01009967	Fab Fold Wing Weldment, RH	1
39	01009976	Fab Fold Wing Weldment, LH	1
40	01010123	Pull Fold Hinge Lock	4
41	01010131	Deck Stiffener	1
42	01010137	Belt Cover, RH	1
43	01010139	Belt Cover, LH	1
44	02000148	Handle Control Bracket	2
45	02000152	Lift Cable Bracket Weldment	4
46	02000267	Front Lift Bracket Weldment	1
47	02000381	Chute Baffle	1
48	02000389	Lift Cable	4
49	02000625	Lift Wing Shield	4
50	02000637	Spacer, 1.00 x .38 x .63	4
51	02000692	Pivot Spacer	4
52	01002511	Nut, 3/8-16, Jam	4

48" Fold Fabricated Deck Spindle Assembly - Figure 3

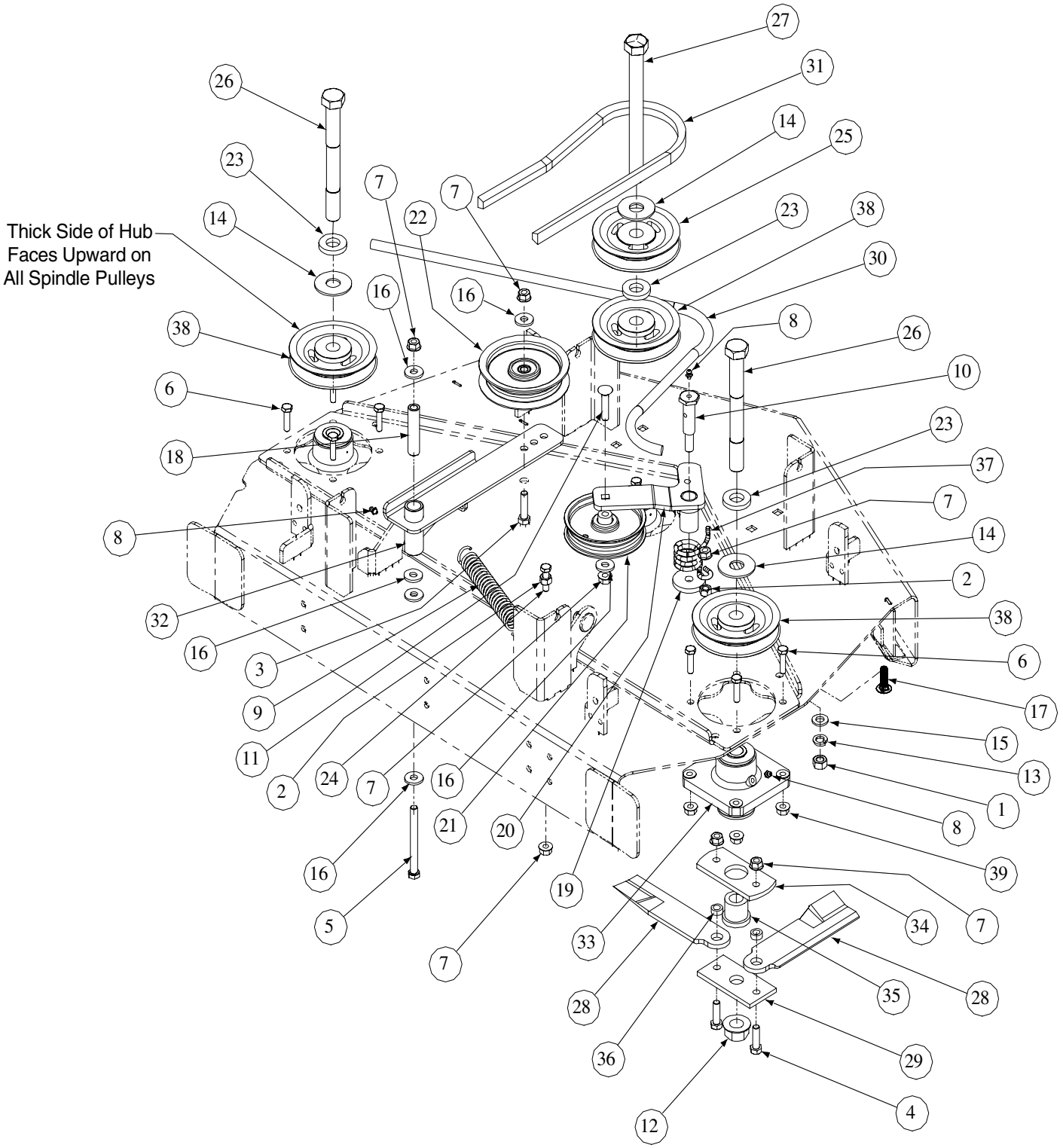

GD: 02000298-01/19/05

48" Fabricated Deck Spindle Assembly - Parts List for Figure 3

Ref. No.	Part No.	Description	Qty.
1	00005763	Hex Nut, 7/16-14	1
2	00006131	Hex Nut 3/8-16	2
3	00011438	Hex Cap Screw, 3/8-16 x 1-1/2	1
4	00011444	Hex Cap Screw, 3/8-16 x 1-1/4	6
5	00011925	Hex Cap Screw, 3/8-16, 3.75	1
6	00013116	Hex Cap Screw, 5/16-18 x 1-1/4	12
7	00022560	Hex Nut, 3/8-16, Lock Flange	11
8	00060078	Grease Fitting, 1/4-28 x 3/16	3
9	01000199	Spring Extension, 1.0 OD x 5.125	1
10	01000302	Shoulder Screw, 7/16-14	1
11	01000364	Hex Carriage Screw, 3/8-16, 1.75	1
12	01000380	Hex Flange Nut, 3/4-16	3
13	01000389	Lock Washer, 7/16	1
14	01000392	Flat Washer, .781 ID, 2.00 OD, .105	3
15	01000393	Flat Washer, .469 ID, .875 OD, .105	1
16	01000723	Flat Washer, .406 ID, 1.0 OD, .105	6
17	01002010	Carriage Screw, 3/8-16 x 1.25	1
18	01003245	Spacer, .39 ID x .625 OD x 2.75	1
19	01003269	Flat Washer, 7/16 ID x 1.75 OD x .25	1
20	01005737	Idler Arm Assembly, Deck Spindle	1
	01000308	Bearing	2
21	01004081	Flat Pulley with Flanges	1
22	01004101	Idler Pulley, 4.06 OD w/Deep Flange	1
23	01004187	Flat Washer, .760 ID x 1.50 OD x .25	3
24	01000369	Hex Cap Screw, 3/8-16 x 1-1/4	1
25	01005202	V-Pulley, 4.75 OD	1
26	01005213	Hex Cap Screw, 3/4-16, 7.00	2
27	01008542	Hex Cap Screw, 3/4-16, 7.50	1
28	01010127	Blade, Short Fold	6
29	01010132	Blade Center Connector	3
30	02000154	V-Belt, A-Section	1
31	02000277	V-Belt, B-Section	1
32	02000818	Idler Arm Weldment	1
	01000308	Bearing	2
33	02000792	Spindle Assembly	3
34	02000796	Blade Upper Mount Plate	3
35	02000798	Blade Spacer	3
36	02000799	Spacer, .385 ID x .625 OD x .25	6
37	732-3067	Idler Torsion Spring	1
38	02000859	V-Pulley, 4.60 OD	3
39	01000635	Hex Nut, 5/16-18, Lock Flange	12

Drive Assembly - Figure 4

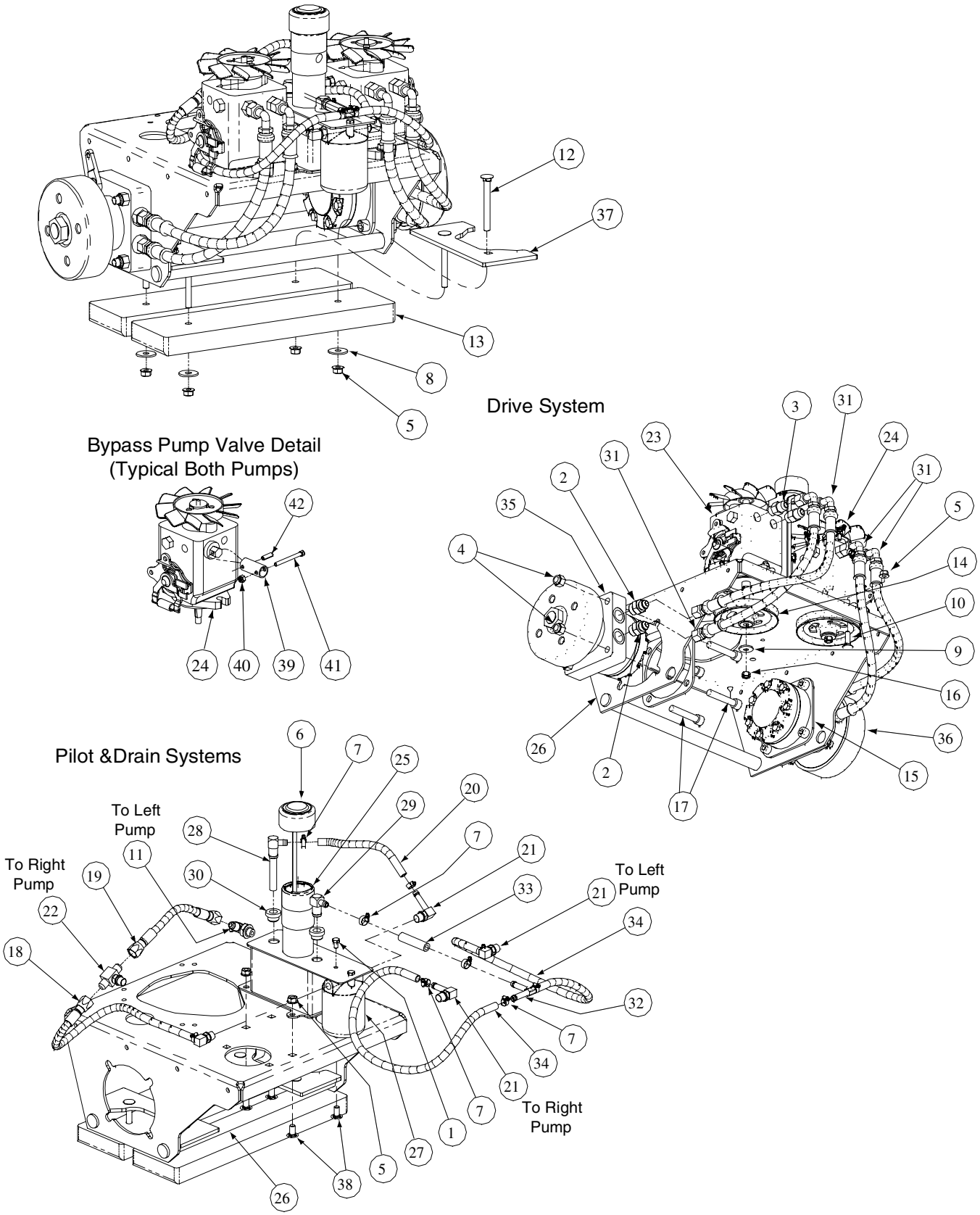

GD: 02000204-01/20/05

Drive Assembly - Parts List for Figure 4

Ref. No.	Part No.	Description	Qty.
1	00012133	Hex Cap Screw, 1/4-20 x 1/2	2
2	00012288	Fitting 1/2 x 3/4 - O Ring	4
3	00012426	Fitting 1/2 x 3/4 - O Ring to Flare	4
4	00012428	Lock Nut, Nylon Insert, 1/2-13	8
5	00022560	Flange Lock Hex Nut, 3/8-16	12
6	02000821	Cap, Hydro Oil Tank	1
7	01000215	Hose Clamp	9
8	01000872	Flat Washer, .411 x 1.25 x .100	4
9	01000942	Bell Washer, .396 x 1.14 x .095	2
10	01002010	Carriage Screw, 3/8-16 x 1.25	4
11	01002602	Elbow Fitting, 3/8 x 3/8	1
12	01002750	Carriage Bolt, 3/8-16 x 3.5 Lg	4
13	01003789	Bar Weight	2
14	01006799	Hydro Pulley Pump	2
15	01006948	Motor Plate	2
16	01007309	Hex Nut, 3/8-24	2
17	01008036	Socket Head Capscrew, 1/2-13; 2-3/4	8
18	02000194	Hose Assembly Inlet Pump	1
19	02000195	Hose Assembly Inlet Connector	1
20	02000197	Drain Hose, 3/8	1
21	02000198	Fitting, 90 Degree O-Ring	4
22	02000199	Tee Fitting, O-Ring	1
23	02000228	Hydro Pump. RH	1
24	02000229	Hydro Pump, LH	1
25	02000263	Hydro Tank Weldment	1
26	02000271	Engine Mount Weldment	1
27	02000276	Filter Head 1/2	1
28	02000294	Elbow Fitting, Tube Steel	1
29	02000295	Elbow Fitting, w/o Tube Steel	1
30	02000296	Grommet Fitting, .54 ID x .78 OD	2
31	02000297	Pressure Hose Assembly	4
32	02000382	Tee Fitting	1
33	02000383	Hose, 3/8	1
34	02000384	Hose, 3/8	2
35	02000391	Hyd. Motor, White Right Hand	1
36	02000392	Hyd. Motor, White Left Hand	1
37	02000773	Deck Plate	2
38	01000372	Carriage Bolt, 3/8-16 x 0.75	4
39	02000693	Bypass Pump Adaptor Assembly	1
40	00012152	LockNut, 1/4-20, Nylon Insert	2
41	00019962	Socket Head Capscrew, 1/4-20 x 2-1/2	2
42	02000863	Roll Pin, .25 x .875	2

Brake Assembly - Figure 5

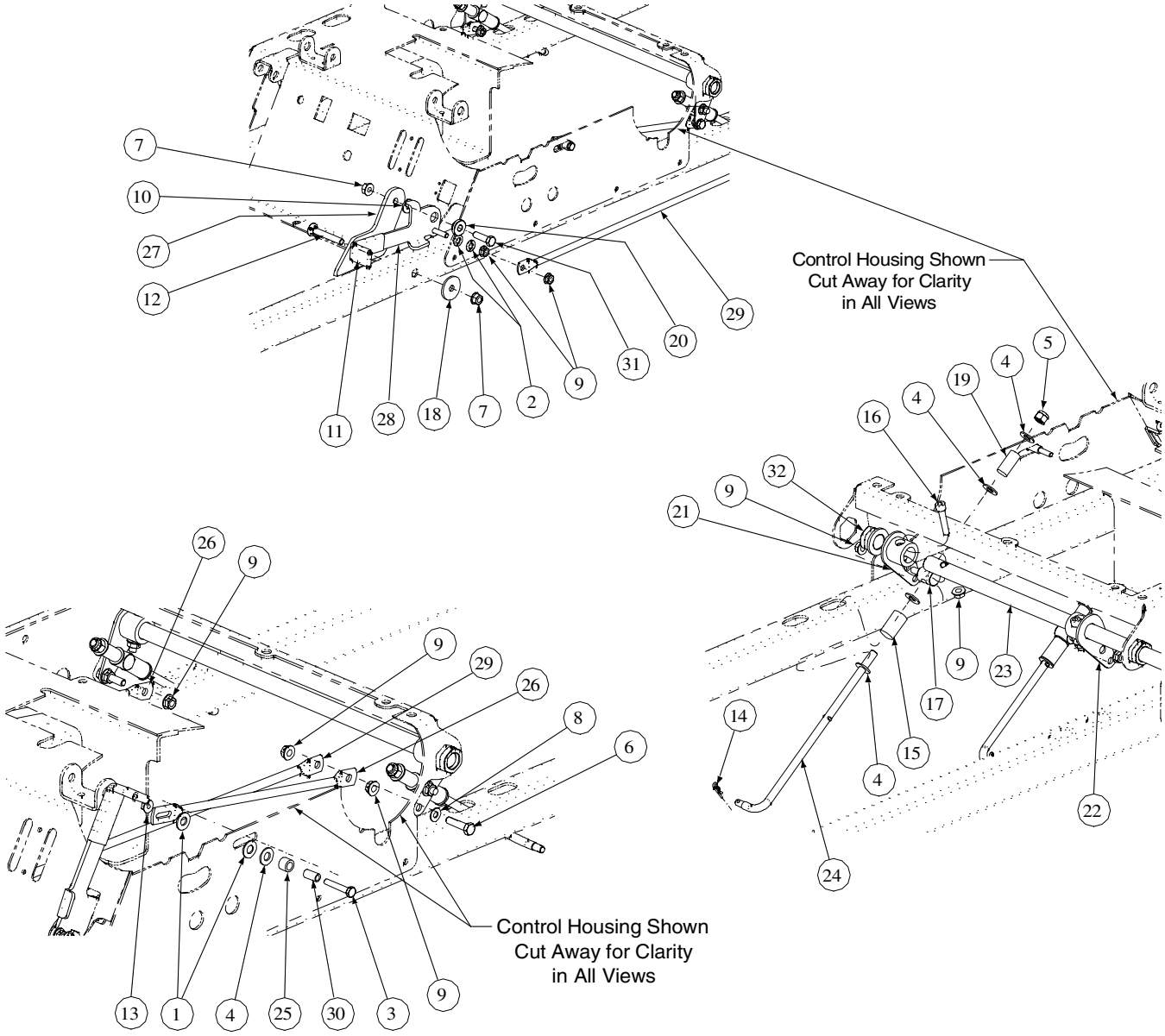

GD: 02000208-01/24/05

Brake Assembly - Parts List for Figure 5

Ref. No.	Part No.	Description	Qty.
1	00005530	Flat Washer, 3/8 Nylon	4
2	00009812	Flat Washer, 5/16	2
3	00011446	Cap Screw, 1/4-20 x 1.50, Grade 5	2
4	00012158	Washer	10
5	00012173	Nylock Insert Lock Nut, 3/8-16	2
6	00013116	Hex Cap Screw, 5/16-18 x 1-1/4	2
7	00022560	Hex Nut, Flange Lock, 3/8-16	2
8	01000600	Flat Washer, 1.4 x .630 x .0515	2
9	01000635	Nut, Lock, HexFlange, 5/16-18	10
10	01000391	Flat Washer, .385 ID x .870 OD x .092	1
11	01001714	Control Sleeve, Drive Black	1
12	01001928	Carriage Bolt, 3/8-16, 2.50	1
13	01002766	Nut, 1/4-20, Hex Flange Lock	2
14	01002771	Cotter Pin, .072 x 1.12 Lg	2
15	01003574	Neutral Brake Spring	2
16	01008600	Socket Head Capscrew, 5/16-18 x 1.50	2
17	01009219	Pivot Brake Joint	2
18	01009253	Washer, 5/16-18	1
19	01009333	Spacer, .625 OD x .390 ID x 1.2	2
20	738-0372B	Spacer, 1.0 x .38 x .38	1
21	02000283	Input Brake Arm Assembly	1
22	02000285	Output Brake Arm Assembly	1
23	02000286	Pivot Brake Shaft	1
24	02000287	Steering Brake Rod	2
25	02000622	Spacer, .380 x .563 x .405 Lg.	2
26	02000623	Steering Lock Rod	2
27	02000628	Brake Handle Mounting Plate	1
28	02000633	Brake Handle Assembly	1
29	02000634	Brake Link Rod	1
30	02000697	Spacer, .259 x .375 x .707 Lg.	2
31	01000369	Hex Cap Screw, 2/8 -16 x 1.25	1
32	741-0598	Hex Flange Bearing, .752 ID	2

Control Assembly- Figure 6

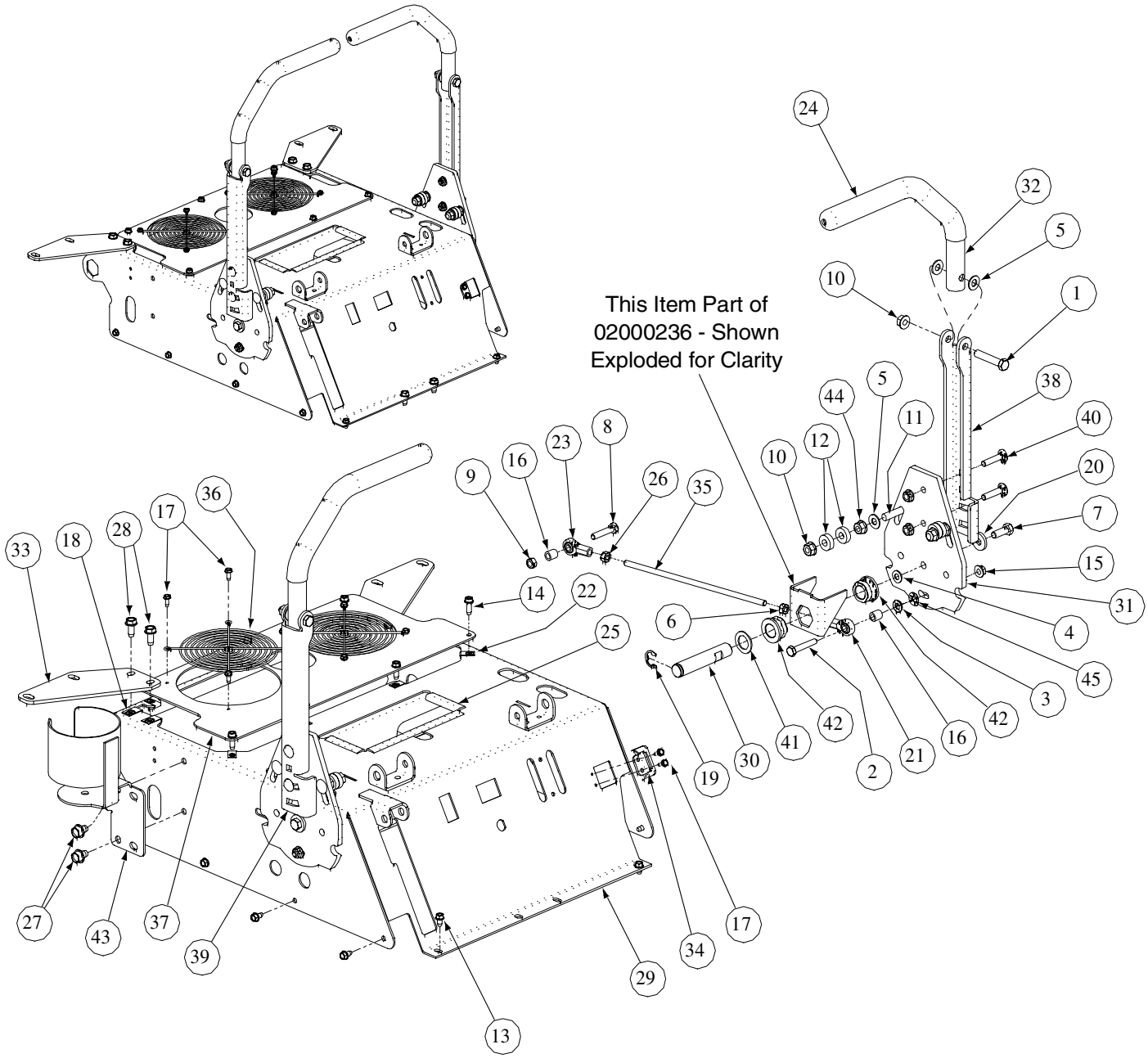

GD: 02000205-01/12/05

Control Assembly - Parts List for Figure 6

Ref. No.	Part No.	Description	Qty.
1	00002528	Hex Cap Screw, 3/8-16 x 2	2
2	00006129	HHCS, 5/16-18, 1-3/4	2
3	00009812	Flat Washer, 5/16	2
4	00011075	Flat washer, 5/16 Zinc	2
5	00012158	Washer	8
6	00012167	Hex Nut, 5/16-24	2
7	00012171	Hex Cap Screw, 3/8-16 x 1.00	2
8	00012382	Hex Cap Screw, 5/16-18 x 1-1/2	2
9	00022547	Nut, 5/16-18, Center Lock	2
10	00022560	Flange Lock Hex Nut, 3/8-16	6
11	00014270	Carriage Bolt 3/8-16 x 2.00	4
12	00071691	Spacer, Control Rod	8
13	01000628	Screw, TT, 1/4-20, 0.5, Hex Index Washer	10
14	01000629	Screw, TT, 1/4-20, 0.75, Hex Index Washer	7
15	01000635	Nut, Lock, HexFlange, 5/16-18	6
16	01000799	Spacer, .265 x .500 x .562	4
17	01001864	Screw, TT, 10-24, .5	10
18	01003563	U-Nut, 5/16-18	4
19	01003994	E Clip, 3/4 Dia.	2
20	01007238	Flat Washer, .385 ID x 1.00 OD x .145	2
21	01008410	Rod End, 5/16, Right Hand	2
22	01008539	U-Nut, 1/4-20	7
23	01008551	Rod End, 5/16, Left Hand	2
24	01008552	Lap Bar Grip	2
25	01008572	Battery Edge Trim	3
26	01008576	Hex Nut, 5/16-24, Left Hand	2
27	01004304	Self Tapping Screw, 5/16-18 x 1/2	2
28	01008764	Hex Washer Screw 5/16-18 x .750	4
29	02000237	Control Housing Assembly	1
30	02000238	Steering Input Shaft	2
31	02000241	Steering Pivot Plate	2
32	02000327	Pivot Handle Control Tube	2
33	02000330	Tank Front Mounting Plate	2
34	02000124	Brake Switch Mounting Bracket	1
35	02000359	Steering Link Rod	2
36	02000372	Fan Cover	2
37	02000647	Hydro Service PLate	1
38	02000662	Lapbar Pivot Bracket, LH	1
39	02000664	Lapbar Pivot Bracket, RH	1
40	710-0262	Carriage Bolt, 5/16-18 x 1.50	4
41	736-0287	Flat Washer, .793 ID x 1.24 OD x .060	2
42	741-0598	Hex Flange Bearing, .752 ID	4
43	02000340	Cup Holder Assembly	1
44	00006131	Hex Nut, 3/8-16	4
45	02000300	Push Retainer, 5/16	2

23HP Kohler Engine Assembly - Figure 7

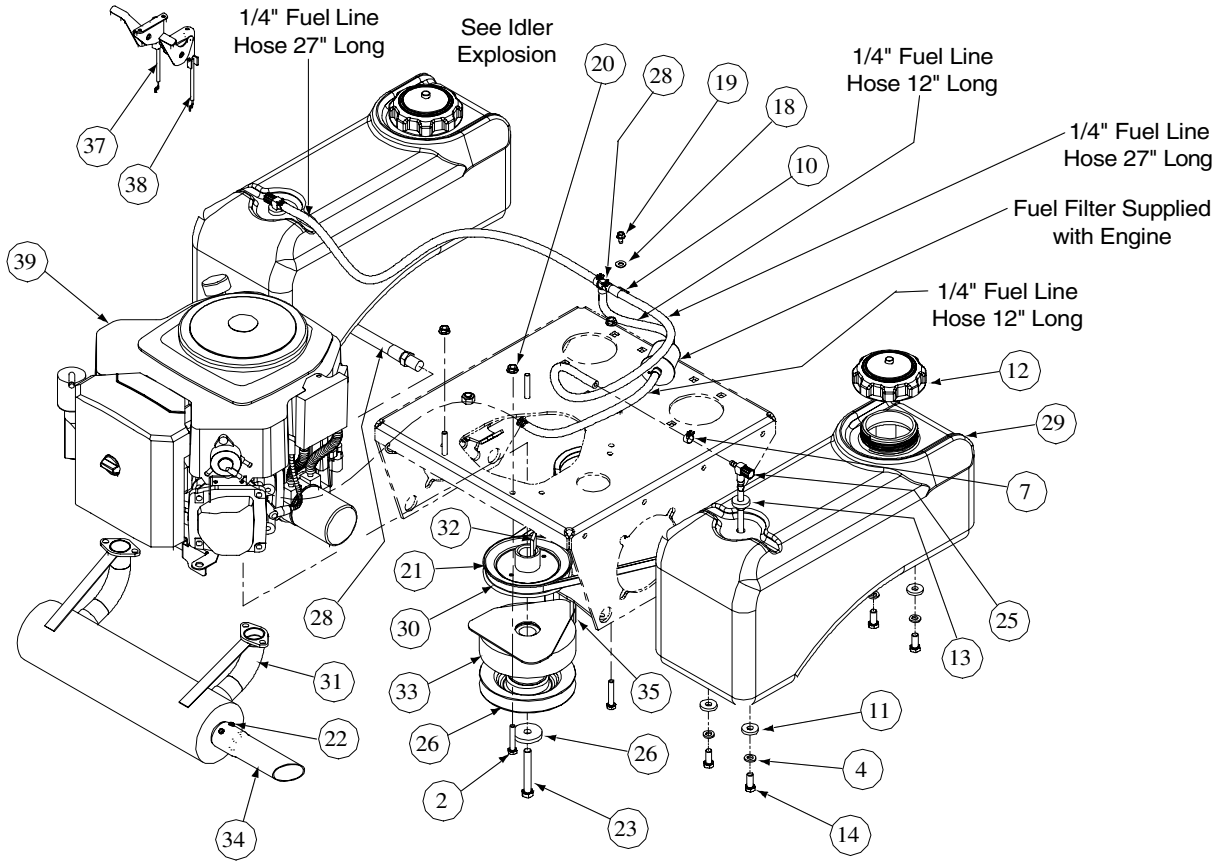

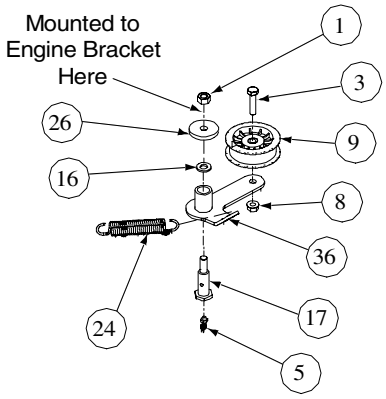

Idler Explosion

Description	Part Number
Air Filter	
Pre Filter	
Fuel Filter	
Oil Filter	
Spark Plug	

GD: 02000203-11/30 /04

23HP Kohler Engine Assembly - Parts List for Figure 7

Ref No	Part No.	Description	Qty.
1	00005763	Hex Nut, 7/16-14	1
2	00006129	HHCS, 5/16-18, 1-3/4	4
3	00010980	Hex Head Cap Screw, 3/8-16 x 1.50	1
4	00012157	Lock Washer, 3/8	8
5	00012226	Grease Fitting, 90°	1
6	--	Hose, 1/4" Fuel Line in inches	78
7	00012235	Clamp, Union	8
8	00022560	Nut, Hex 3/8-16 Flange Lock	1
9	00030782	Idler Pulley w/ Adaptor	1
10	00031081	Clamp, 1/2 Tubing	1
11	00083192	Idler Washer	8
12	01000069	Fuel Cap, 3.5	2
13	01000281	Grommet, Fuel Tank	2
14	01000368	Hex, Cap Screw, 3/8-16, .88	2
15	02000427	23HP Kohler Engine	1
16	01000393	Flat Washer, .469 ID, .875 OD, .105	1
17	01000505	Shoulder Bolt	1
18	01000600	Flat Washer, 1.4 x .630 x .0515	1
19	01000628	Screw, TT, 1/4-20, 0.5, Hex Index Washer	1
20	01000635	Nut, Lock, HexFlange, 5/16-18	1
21	01000737	Trans Drive Pulley	4
22	01000811	Screw, 8-32 x 0.375	1
23	01000813	Hex Head Cap Screw, 7/16-20 x 3.00	2
24	01002874	Extension Spring, .865 OD x 4.68 lg	1
25	01003116	Fuel Pickup Fitting	1
26	01003269	Flat Washer, 7/16 ID x 1.75 OD x .25	2
27	01003283	Oil Drain Hose	2
28	01003473	Tee Fitting, Fuel	1
29	01004350	Fuel Tank	1
30	01005010	V Belt, A Section x 47.3	2
31	01006566	23HP Kohler Exhaust	1
32	01007533	Key, 1/4 x 1/4 x 2.75	1
33	01008544	Clutch Electric, Ogura JD08	1
34	01008623	Straight Exhaust Pipe	1
35	01008640	Clutch Retainer Assembly	1
36	01009911	Idler Arm Assembly	1
37	02000387	Throttle Control Cable	1
38	02000388	Choke Control Cable	1

Note: Engine Oil 10W40 by the Gallon

23HP Electrical Assembly Kohler - Figure 8 & Parts List

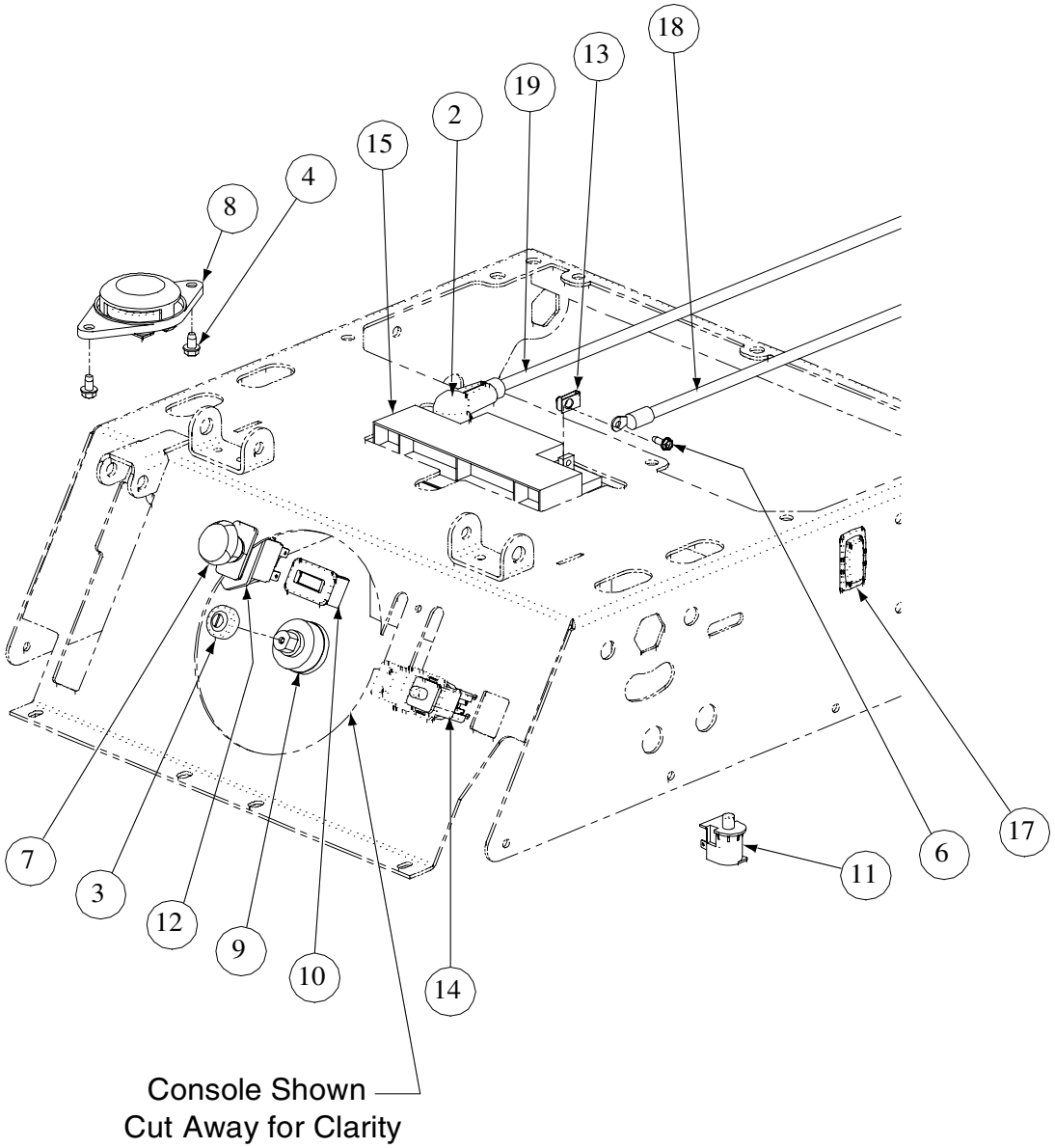

GD: 02000207-12/20/04

Ref. No.	Part No.	Description	Qty.	Ref. No.	Part No.	Description	Qty.
1	00012470	Cable Tie, 3/16 x .05 x 7.4	4	11	01008028	Snap Mounting Switch, NO	2
2	00013258	Boot, 1" OD Rubber Battery-PST, Red	1	12	01009905	PTO Switch Bracket	1
3	00032097	Nut, W/Cap, 5/8-32 Ignition	1	13	01009931	U-Nut, #10-16	2
4	01000628	Screw, TT, 1/4-20, 0.5, Hex Index Washer	2	14	02000024	Switch, Safety N.O./N.C.	1
5	01001811	HourMeter Harness, (not shown)	1	15	02000279	Battery, Small 12CE18	1
6	01001864	Screw, TT, 10-24, .5	2	16	02000386	Harness Assembly, (not shown)	1
7	01002111	Switch, Electric, PTO	1	17	02000390	Actuator Harness Assembly, (not shown)	1
8	01003277	Normally Closed Seat Switch	1	18	02000683	Cable, Battery, Black, 28"	1
9	01003581	Switch, Ignition, 6 Pin	1	19	02000684	Cable, Battery, Red, 28"	1
10	01005389	Meter, Hour	1				

48" Wheel Assembly - Figure 9 and Parts List

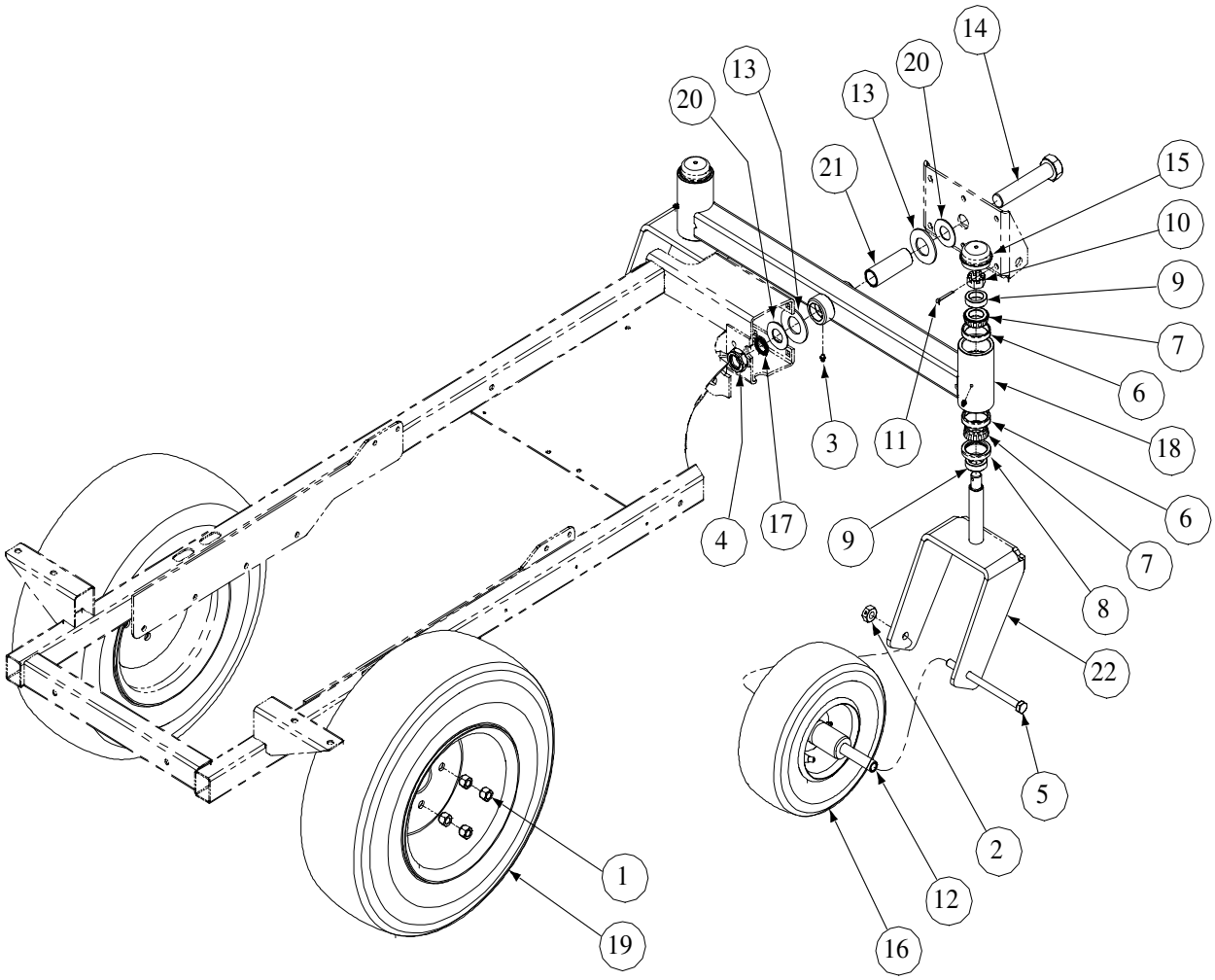

GD: 02000210-12/20/04

Ref. No.	Part No.	Description	Qty.	Ref. No.	Part No.	Description	Qty.
1	00012187	Lug Nut, 1/2-20	8	12	01004128	Wheel Spacer	2
2	00023287	Nut, 1/2-20, Center Lock	2	13	01006294	Bell Washer, 1.25 ID	2
3	00060078	Grease Fitting	3	14	01006309	Hex Cap Screw, 1-14 x 5.0	1
4	01000678	Nut, Jam, 1.0-14, Insert Lock	1	15	01006347	Grease Cap, 1.986 OD	2
5	01002611	HHCS, 1/2-20, 7.00	2	16	01006559	Wheel Assembly, 11 x 4-5.00	2
6	01002620	Cup Bearing	4	17	01009997	Retainer Extension, Self Locking	1
7	01002621	Bearing Cone	4	18	02000250	Straight Front Axle	1
8	01002622	Seal	2	19	02000274	Wheel, 21 x 7-10	2
9	01002624	Ring Seal	4	20	02000588	Flat Washer, 1.00 ID	2
10	01002626	Slotted Nut, 3/4-16	2	21	02000589	Spacer, 1.005 ID x 1.25 OD x 3.6	1
11	01002627	Cotter Pin, 5/32, 1.25	2	22	02000784	Yoke, Caster Wheel	2

Lift Assembly - Figure 10

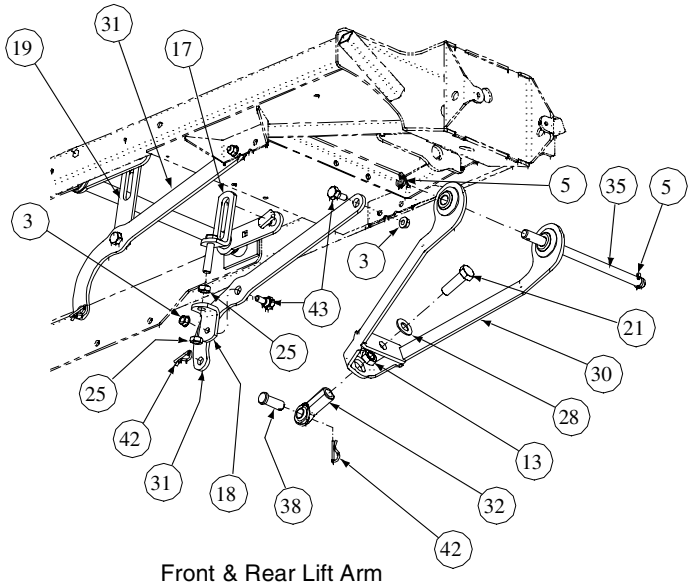

Front & Rear Lift Arm
Explosion

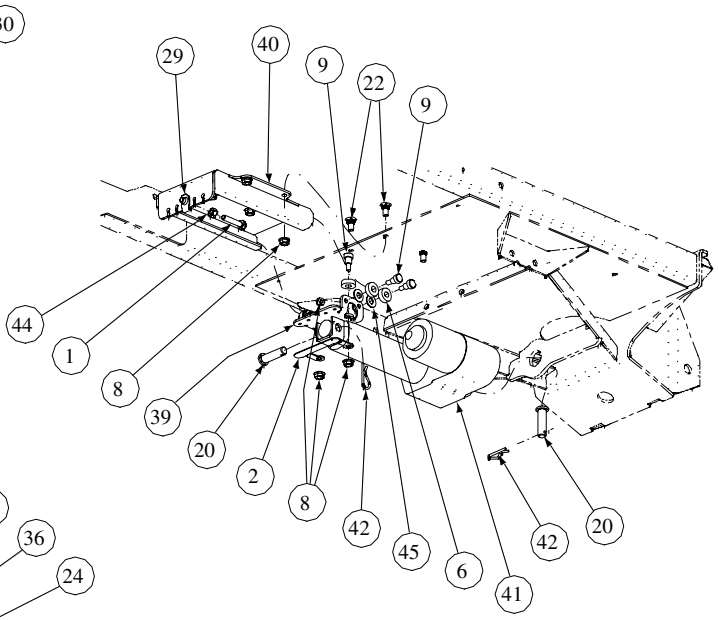

Wing Actuator Explosion

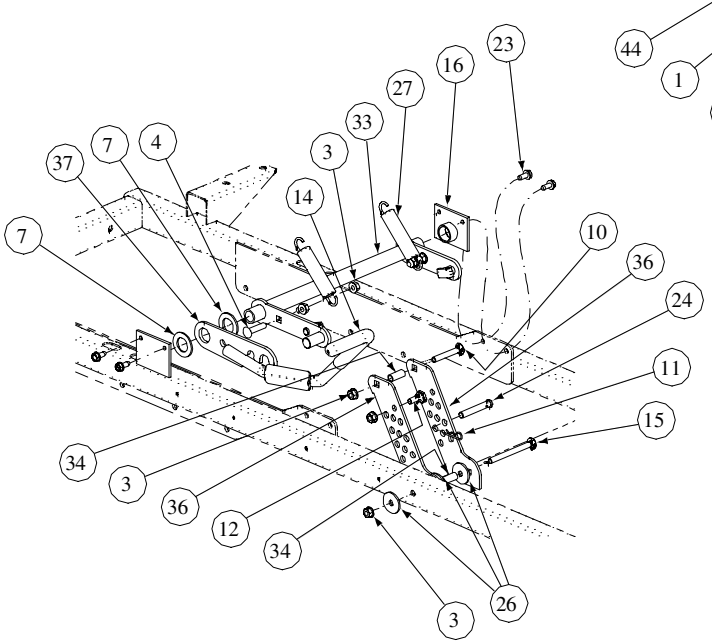

Rock Shaft & Index
Explosion

GD: 02000206-01/14/05

Lift Assembly - Parts List for Figure 10

Ref. No.	Part No.	Description	Qty.
1	00012382	Hex Cap Screw, 5/16-18 x 1-1/2	1
2	02000877	Cable Bracket	1
3	00022560	Flange Lock, Hex Nut, 3/8-16	11
4	00030276	Carriage Bolt 3/8-16 x 1.50	2
5	00060018	Cotter Pin, 3/16 x 1-1	2
6	00071691	Spacer, Control Rod	6
7	00072586	Washer	2
8	01000635	Nut, Lock, HexFlange, 5/16-18	10
9	00013733	Shoulder Bolt, 3/8 x 3/8	6
10	01001928	Carriage Bolt 3/8-16 x 2.50	1
11	01003537	Cotter Pin, .148 x 3.00	1
12	01004118	Shoulder Screw, .50 OD x 0.27	1
13	01007526	Jam Nut, 5/8-18	1
14	01007561	Lift Handle Grip	1
15	01008049	Carriage Bolt, 3/8-16 x 4.00	1
16	01008477	Lift Hub Assembly	2
17	02000833	Upper Link Lift Assembly, Left Hand	1
18	01008183	Lower Lift Bracket, Left Hand	1
19	01008186	Link Lift PLate, Right Hand	1
20	01008203	Clevis Pin, .500 Dia. x 1.75 Lg.	2
21	01008530	Hex Cap Screw, 5/8-18 x 2.00	1
22	00020508	Carriage Bolt, 5/16-18 x .75	4
23	01008620	Self Tapping Screw, 5/16-18 x 3/4	4
24	01008652	Clevis Pin, .438 Dia. x 2.625 Lg.	1
25	01008658	Jam Nut, 1/2-20	2
26	01009253	Washer, 5/16-18	3
27	01009635	Extension Spring, .98 OD x 5.00	2
28	01010140	Washer, 5/8	1
29	01003563	U-Nut, 5/16-18	1
30	02000254	Lift Front Arm Assembly	1
31	02000273	Rear Lift Arm	2
32	02000293	Rod End, 5/8, RH	1
33	02000336	Lift Shaft Assembly	1
34	02000337	Spacer, .375 x .5 x 1.176 Lg.	2
35	02000350	Front Lift Rod	1
36	02000352	Lift Index Plate	2
37	02000472	Lift Handle Assembly	1
38	02000485	CLevis Pin, 5/8 Dia.	1
39	02000849	Actuator Mounting Bracket	1
40	02000852	Cable Mounting Bracket Assembly	1
41	02000660	Actuator	1
42	02000673	Hair Pin	5
43	02000393	Shoulder Screw, 3/8-16, .56 x .27	4
44	00012166	Hex Nut, 5/16-18	1
45	00012158	Flat Washer, 3/8	4

Seat Assembly- Figure 11 and Parts List

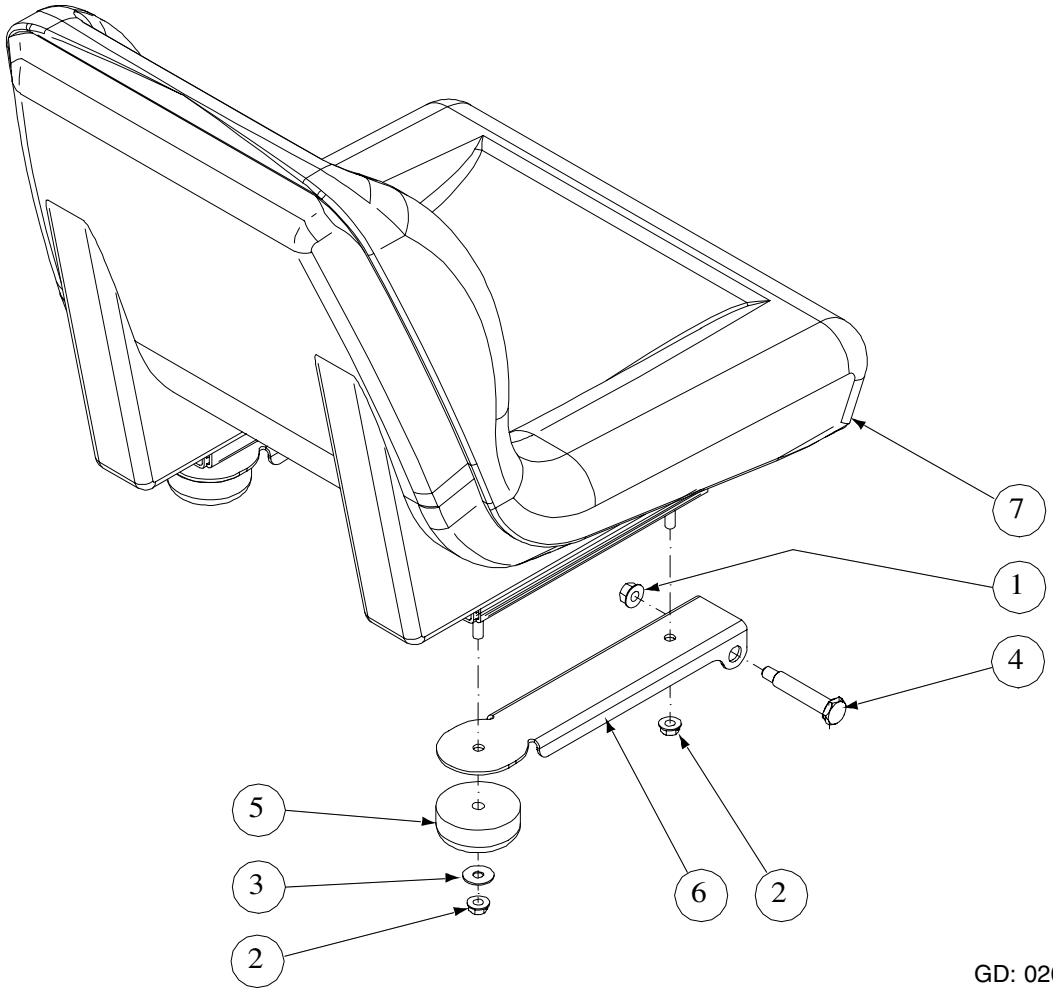

GD: 02000211-11/17/04

Ref. No.	Part No.	Description	Qty.
1	00022560	Flange Lock Hex Nut, 3/8-16	2
2	01000635	Hex Flange Lock Nut, 5/16-18	4
3	01000960	Belle Washer, .325 x .930 x .045	2
4	01002634	Shoulder Screw, .50x2.345, 3/8-16	2
5	01002753	Grommet, 2.5 OD x 1.0 Long	2
6	01008583	Seat Mounting Bracket	2
7	02000244	Seat	1

Decal Map

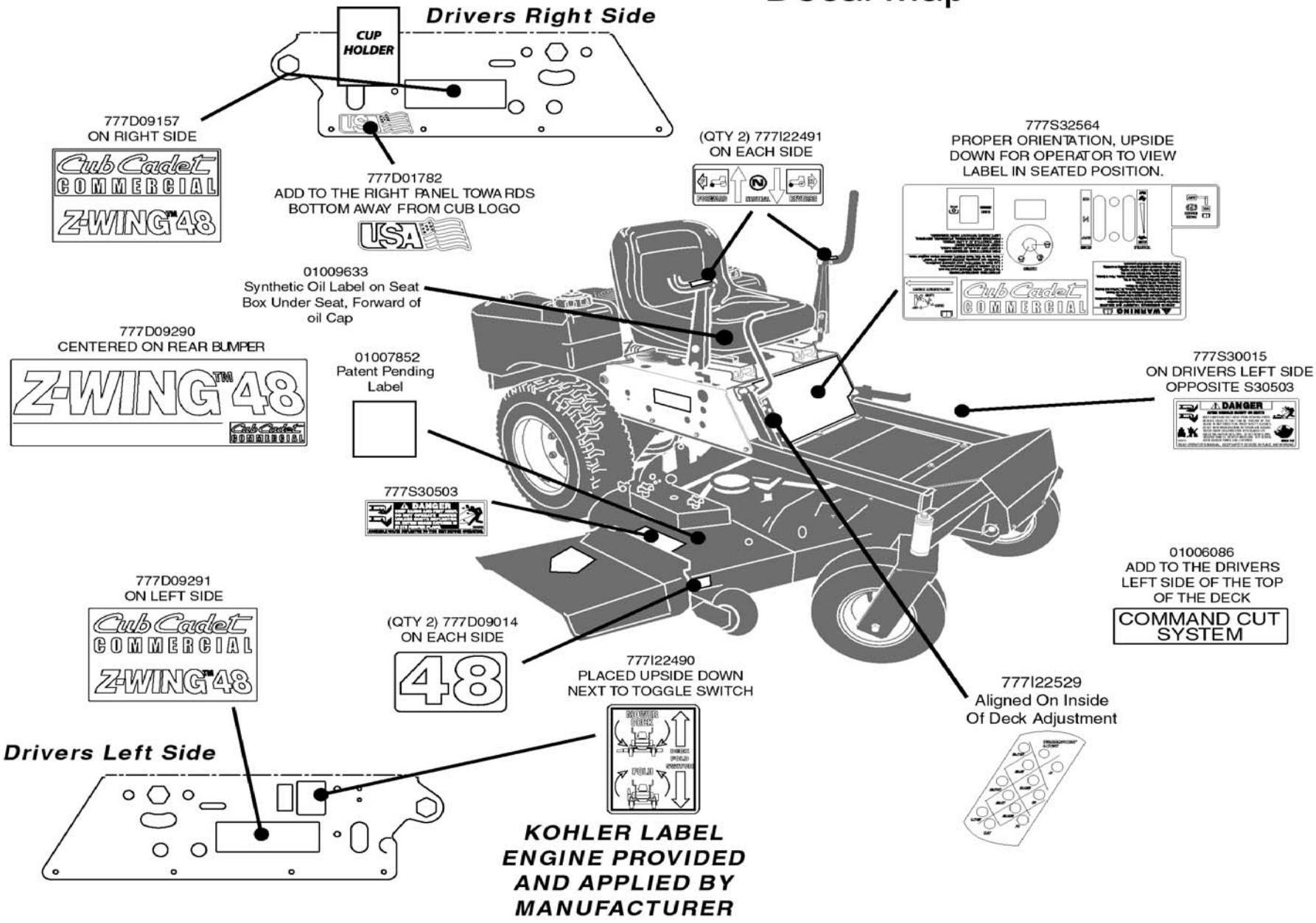
Drivers Right Side
CUP HOLDER
777D09157
ON RIGHT SIDE
777D01782
ADD TO THE RIGHT PANEL TOWARDS
BOTTOM AWAY FROM CUB LOGO
(QTY 2) 777I22491
ON EACH SIDE
777S32564
PROPER ORIENTATION, UPSIDE
DOWN FOR OPERATOR TO VIEW
LABEL IN SEATED POSITION.
01009633
Synthetic Oil Label on Seat
Box Under Seat, Forward of
oil Cap
777D09290
CENTERED ON REAR BUMPER
01007852
Patent Pending
Label
777S30015
ON DRIVERS LEFT SIDE
OPPOSITE S30503
777S30503
01006086
ADD TO THE DRIVERS
LEFT SIDE OF THE TOP
OF THE DECK
COMMAND CUT
SYSTEM
777D09291
ON LEFT SIDE
(QTY 2) 777D09014
ON EACH SIDE
777I22490
PLACED UPSIDE DOWN
NEXT TO TOGGLE SWITCH
777I22529
Aligned On Inside
Of Deck Adjustment
Drivers Left Side
KOHLER LABEL
ENGINE PROVIDED
AND APPLIED BY
MANUFACTURER

Notes

Notes



Cub Cadet Commercial
P.O. Box 368023
Cleveland, OH 44136

Form No. 02000823 Rev. 05-0 01/26/2005