Cub Cadet®

Illustrated Parts Manual

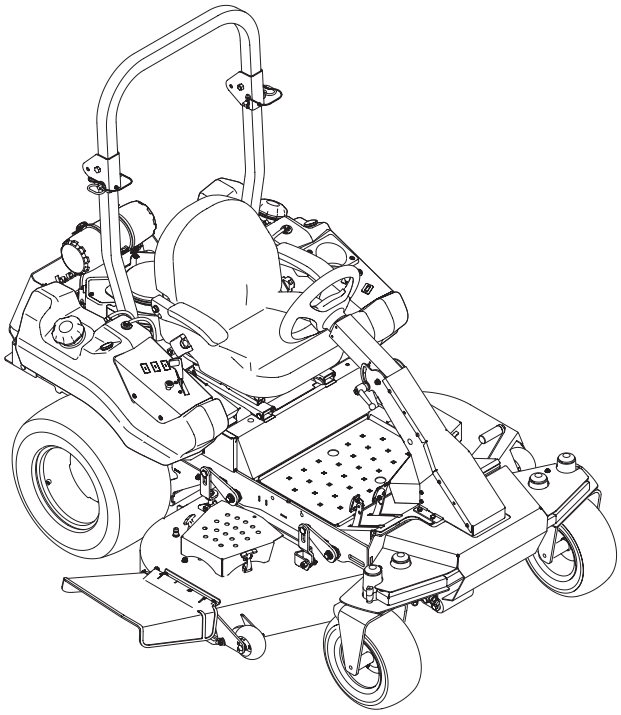

TANK SZ

CUB CADET LLC, P.O. BOX 361131 CLEVELAND, OHIO 44136-0019

Printed In USA

Form No. 769-07847
January 26, 2012

To The Owner

Thank You

Thank you for purchasing a Cub Cadet Zero-Turn Tractor. It was carefully engineered to provide excellent performance when properly operated and maintained.

All information in this manual is relative to the most recent product information available at the time of printing. Please be aware that this Illustrated Part's Manual may cover a range of product specifications for various models.

Components listed and/or illustrated in this manual may not be applicable to all models. We reserve the right to change product specifications, designs and equipment without notice and without incurring obligation.

Throughout this manual, all references to *right* (RH) and *left* (LH) are observed from the operating position.

Table of Contents

Battery 30
Choke Control 22/24
Consoles/Control Panels 8
Deck Assembly, 48" 26
Deck Assembly, 60" 28
Deck Lift Assembly 20
Electrical 30
Electrical Schematic 31
Engine Accessories, Kohler 22
Engine Accessories, Kawasaki 24
Engine, Kawasaki FX850V-S11 34-46
Engine, Kohler CV680-3042 48-64
Frame 3
Front Axle 14
Fuel Tank 10-11
Hydro Controls 6
Labels 32
Meter, Hour 30
Muffler 22/24
Pedal Controls 18
PTO Knob 30
ROPS 4
Seat 4
Steering Controls 12
Steering Wheel/Steering Column 16
Throttle Control 22/24
Wheels, Front 14
Wheels, Rear 6

Record Product Information

To ease in ordering replacement parts, please locate the model plate on the equipment and record the information in the provided area to the right. You can locate the model plate by looking beneath the seat.

Model Number

Serial Number

Painted Parts

When ordering painted service parts, a four digit color suffix must be added to the part number (e.g. 783-XXXXX-0637). Please refer to the table below for current color codes:

0637	Black
4021	Yellow (Cub Cadet)
0499	Beige (Cub Cadet)
0685	Blue (Cub Cadet)
0691	Black Jack (Cub Cadet Commercial)

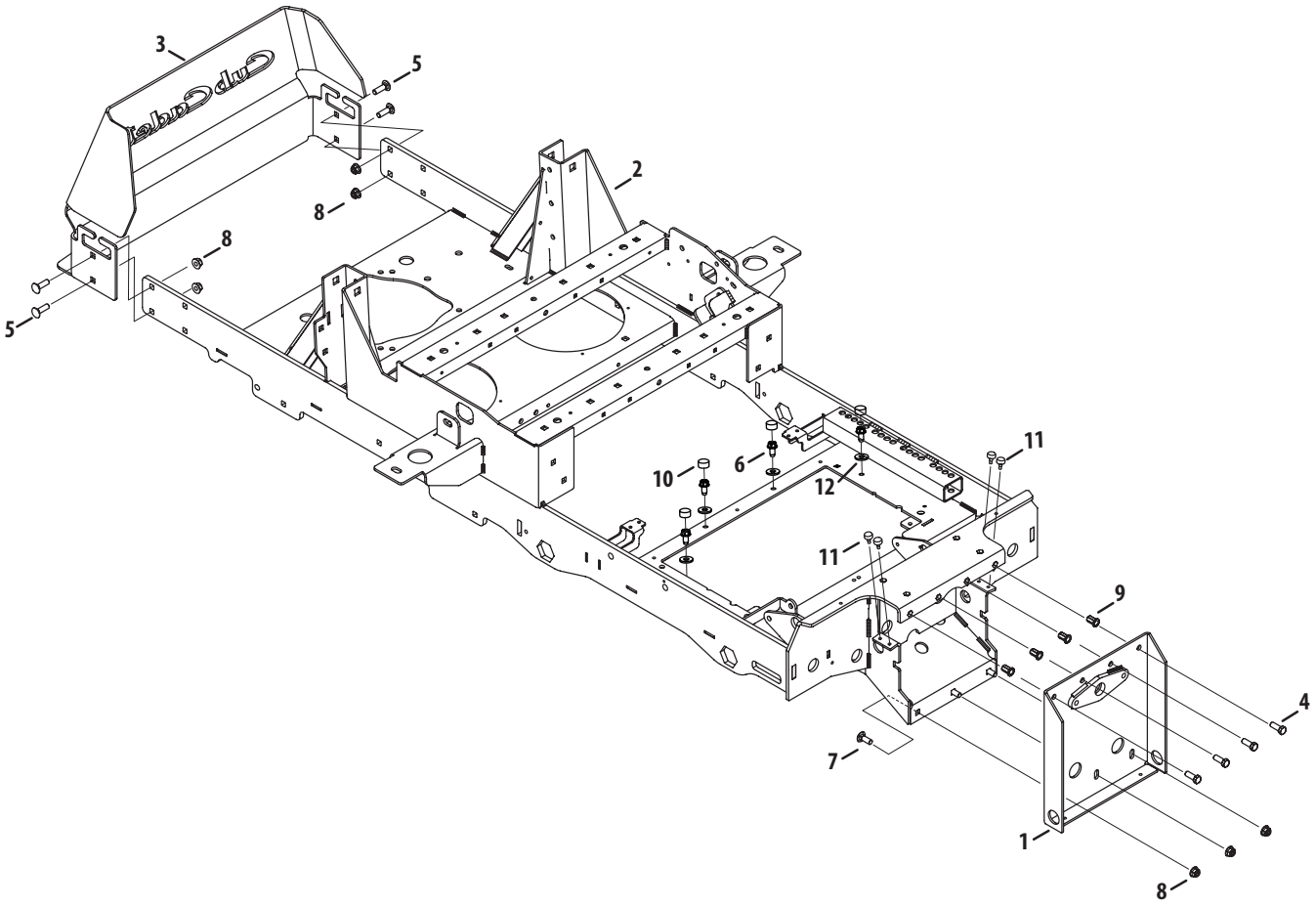

Ref	Part Number	Description
1	680-00146	Front Axle Bracket Assembly
2	680-00184B	Frame Assembly
3	703-08066	Rear Bumper
4	710-0514	Hex Cap Screw, 3/8-16 x 1.00
5	710-05408	Carriage Bolt, 3/8-16 x 1.25
6	710-0623	Screw, 3/8-16 x .750
7	710-3168	Carriage Bolt, 3/8-16 x 1.00
8	712-04065	Nylock Nut, 3/8-16
9	728-04062	Rivet Nut, 3/8-16
10	731-1490	Slide Cap
11	735-0271A	Bumper, .62 Dia. x .3
12	736-3052	Washer, .406 x 1.00 x .105

Seat Assembly

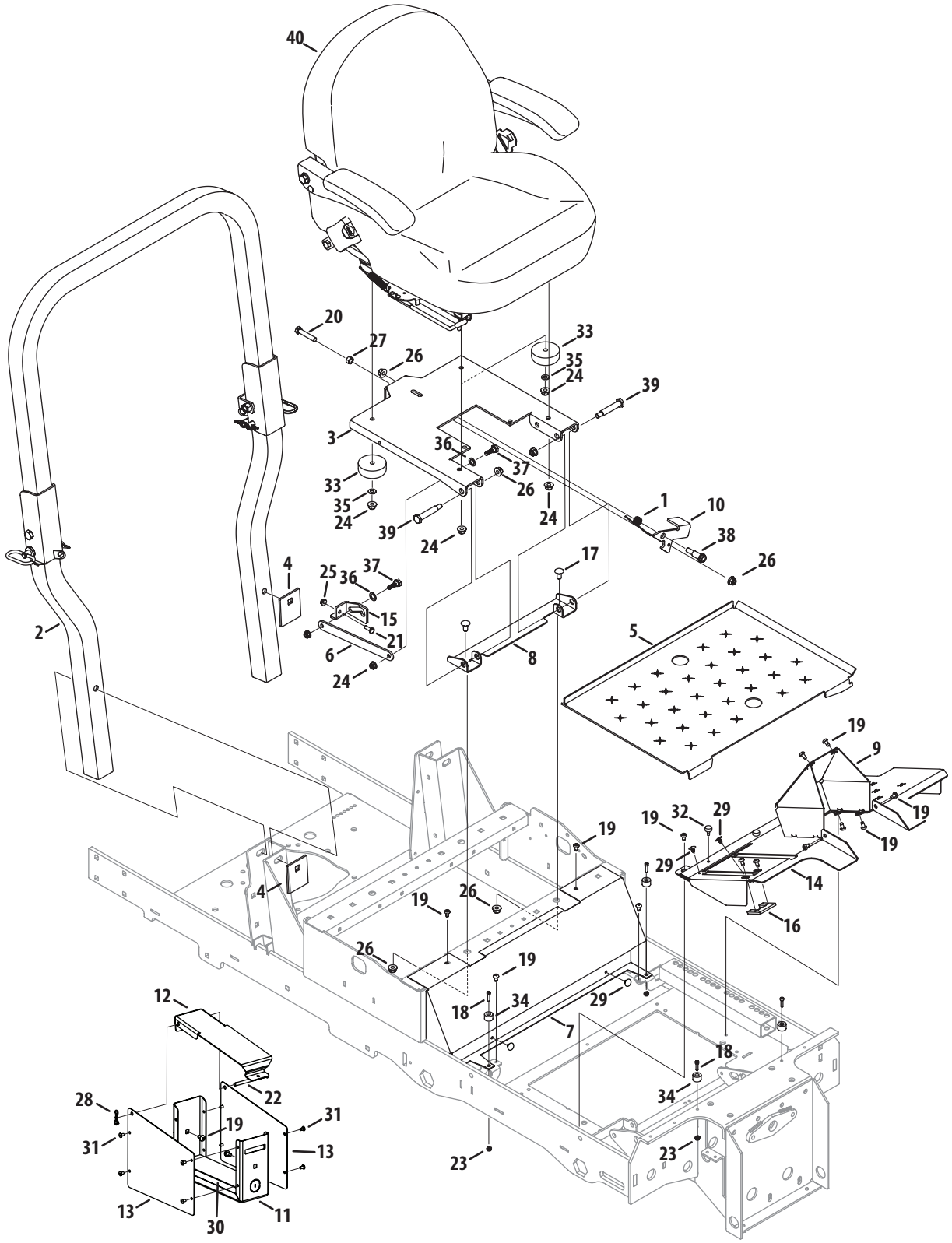

Ref.	Part Number	Description
1	01008140P	Torsion Spring, .725 x 1.0 x .09
2	680-00175	Folding ROPS Assembly
3	703-07814	Seat Mounting Bracket
4	703-07880	Deck Reinforcement Plate
5	703-08016	Floor Panel
6	703-08198	Seat Lockout Bracket
7	703-08223	Floor Panel Tray
8	703-08241	Seat Mounting Bracket
9	703-08323	Column Cover
10	703-08480	Seat Lever Latch
11	703-08511	Storage Box
12	703-08513	Storage Box Lid
13	703-08519	Storage Box Side Panel
14	703-08596	Pedal Cover
15	703-08758	Seat Lockout Mount
16	703-08857	Stop Pedal Bracket
17	710-0389	Carriage Bolt, 3/8-16 x .75
18	710-04868	Socket Head Screw, 10-24 x .75
19	710-05070	Screw, ¼-20 x .5
20	710-3011	Hex Cap Screw, 3/8-16 x 2.25
21	710-3015	Hex Cap Screw, 1/4-20 x .75

Ref.	Part Number	Description
22	711-05607A	Clevis Pin, .25 x 3.5
23	712-0161	Nut, #10-24, Hexlock
24	712-04063	Nut, 5/16-18, Flangelock
25	712-04064	Nut, 1/4-20, Flangelock
26	712-04065	Nut, 3/8-16, Flangelock
27	912-3017	Nut, 3/8-16, Hex
28	714-04040	Cotter Pin, Bow Tie
29	726-04072A	Clip, .250 Dia. x .500
30	727-04385	Adhesive Pad
31	728-04016	Rivet, 3/16 x .325
32	735-0271A	Bumper, .62 Dia. x .3
33	735-04286	Rubber Bumper, 2.5 x 1.0
34	735-04287	Rubber Bumper, .75 x .500
35	936-0275	Washer, .344 x .688 x .065
36	736-3024	Washer, .469 x .750 x .06
37	938-0296	Shoulder Screw, .437 x .268, 5/16-18
38	738-0966A	Shoulder Bolt, .50 x .925, 3/8-16
39	738-1011A	Shoulder Bolt, .500 x 2.23, 3/8-16
40	757-04152	Seat
	757-04160	Seat, w/ Suspension (60" only)

Hydro Controls

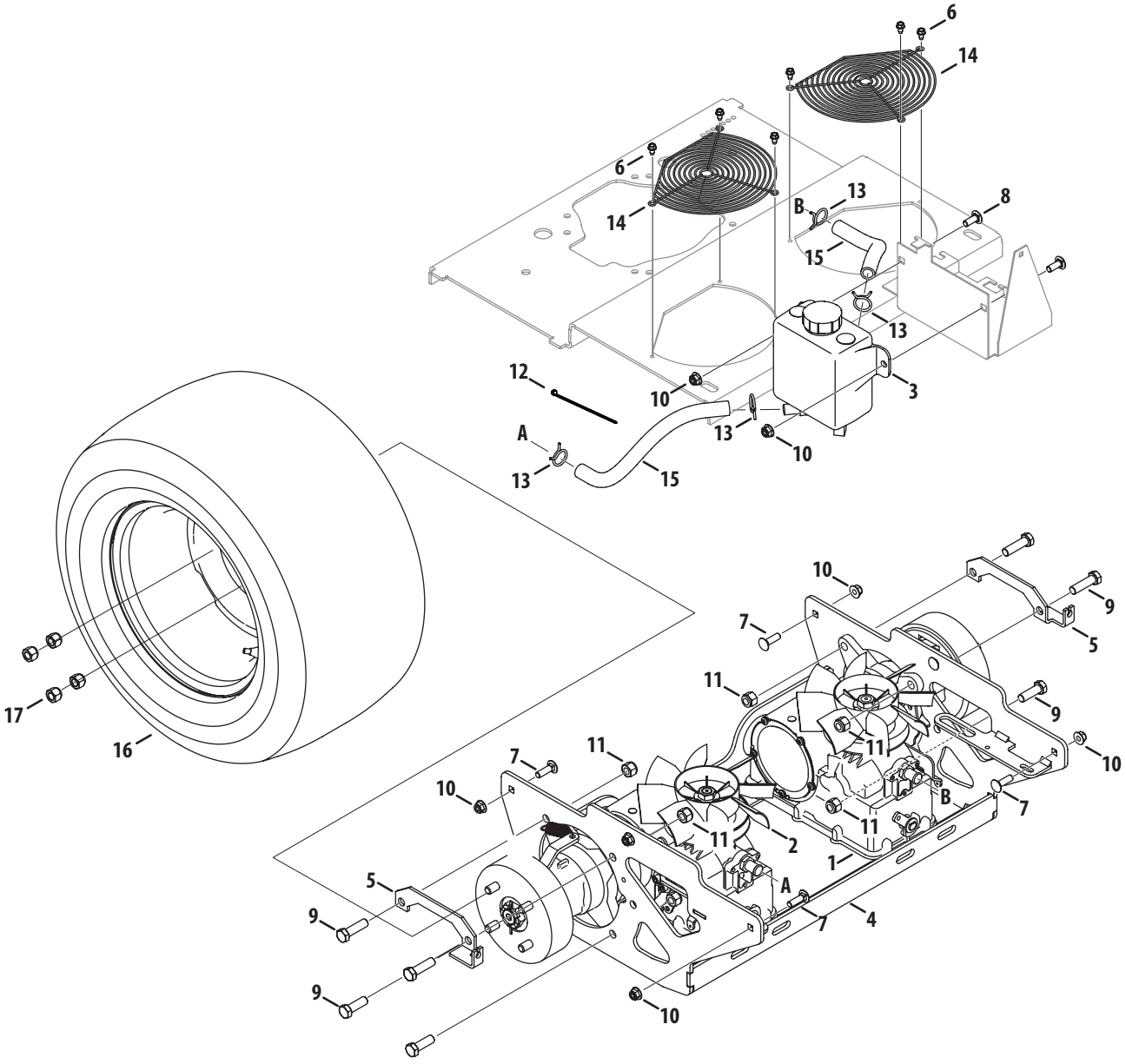

Ref.	Part Number	Description
1	918-05007	Transmission, LH
2	918-05008	Transmission, RH
3	931-04566	Hydro Tank Assembly
4	680-00177	Transmission Bracket Assembly
5	703-08249	Transmission Brake Bracket
6	1767754	Screw, 10-24 x .500
7	710-05408	Carriage Bolt, 3/8-16 x 1.25
8	710-3168	Carriage Bolt, 3/8-16 x 1.00
9	710-3181	Hex Cap Screw, 1/2-13 x 1.50
10	712-04065	Nut, 3/8-16, Flangelock
11	712-04150	Nut, 1/2-13, Flangelock
12	725-0157	Cable Tie
13	726-04118	Hose Clamp, .875
14	732-04833	Fan Cover
15	751-12281	Hose, 5/8 ID x 12.00 LG
16	634-04749	Wheel Assembly, 24 x 9.5-12 (48")
	634-04734-0931	Wheel Assembly, 24 x 12-12 (60")
17	712-04311	Lug Nut, 1/2-13

Control Group

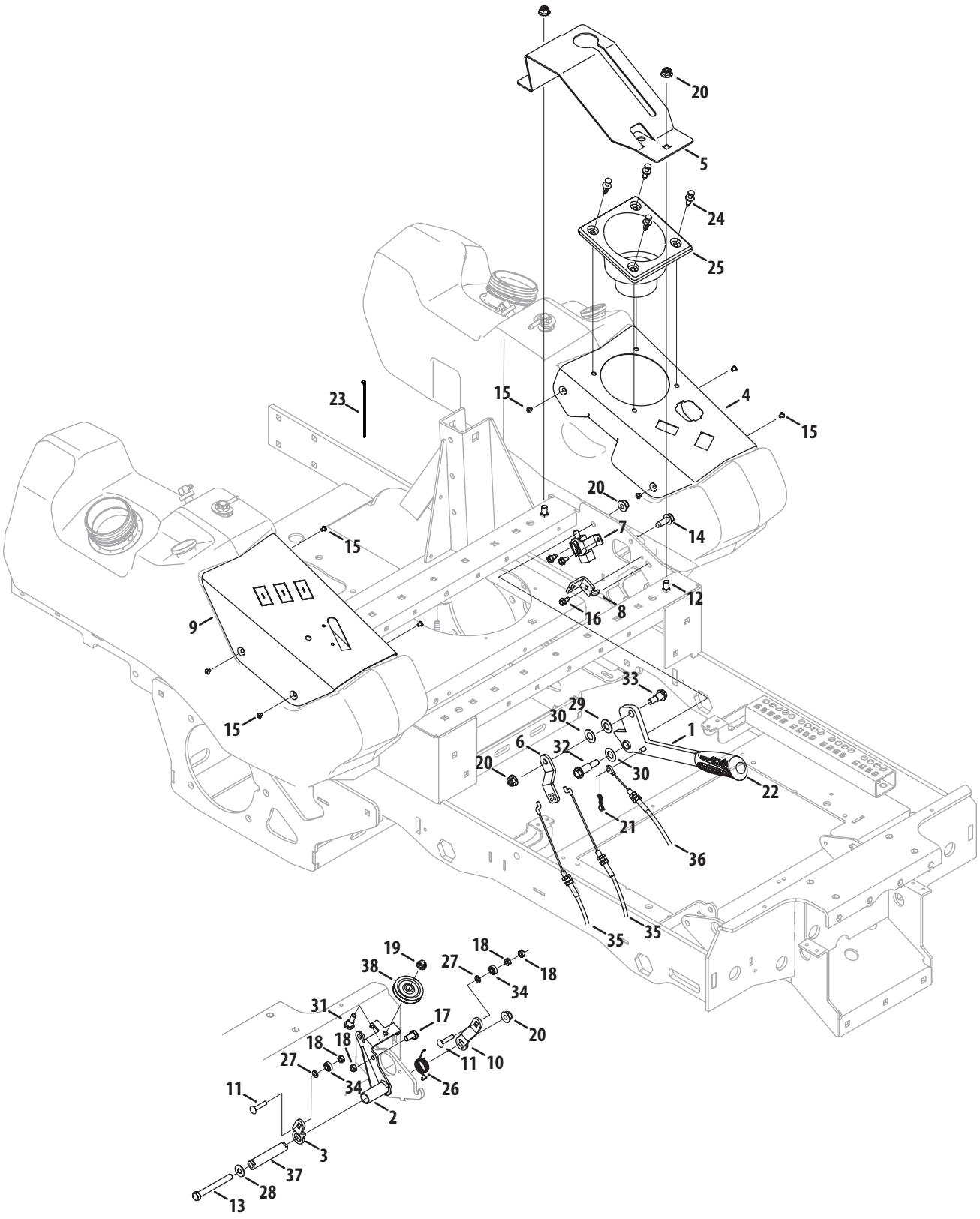

Ref.	Part Number	Description
1	680-00191	Brake Handle Weldment
2	680-00232	Brake Control Bracket Assembly
3	703-07898B	Lock Control Plate
4	703-08123	LH Control Panel
5	703-08209	Boot Brake Bracket
6	703-08337	Pivot Brake Bracket
7	703-08370	Brake Switch Bracket
8	703-08467A	Lockout Cable Mounting Bracket
9	703-08482	RH Control Panel
10	703-08732A	Lock Control Plate
11	710-0606	Carriage Screw, 1/4-20 x 1.50
12	710-0389	Carriage Bolt, 3/8-16 x .75
13	710-0615A	Hex Cap Screw, 3/8-16 x 5.00
14	710-04683	Screw, 3/8-16 x 1.00
15	710-05421	Machine Screw, #10-32 x .25
16	710-0599	Hex Flange Screw, 1/4-20 x .500
17	710-0501	Hex Cap Screw, 1/4-20 x 2.00
18	912-0291	Nut, 1/4-20, Hexlock
19	712-04063	Nut, 5/16-18, Flangelock
20	712-04065	Nut, 3/8-16, Flangelock
21	714-04040	Bow Tie Cotter Pin
22	720-04139B	Grip, .50 ID
23	725-0157	Cable Tie
24	728-0199	Rivet, .3125
25	731-08438	Cup Holder
26	732-04963	Coil Spring, .862 Dia. x .075 Wire
27	936-0142	Washer, .281 x .500 x .063
28	936-0267	Washer, .385 x .87 x .06
29	936-0272	Washer, .510 x 1.00 x .060
30	936-3013	Washer, .531 x 1.00 x .030
31	738-0138A	Shoulder Screw, .437 x .470, 5/16-18
32	738-0966A	Shoulder Bolt, .50 x .925, 3/8-16
33	738-1007	Shoulder Screw, .50 x .50, 3/8-16
34	741-04425	Ball Bearing, .250 x .625
35	946-04734	Brake Cable
36	946-04762	Brake Lockout Cable
37	750-05551	Spacer, .385 x .625 x 3.293
38	756-04331	Roller Cable Pulley, 1.69 Dia.

Fuel Tank Assembly

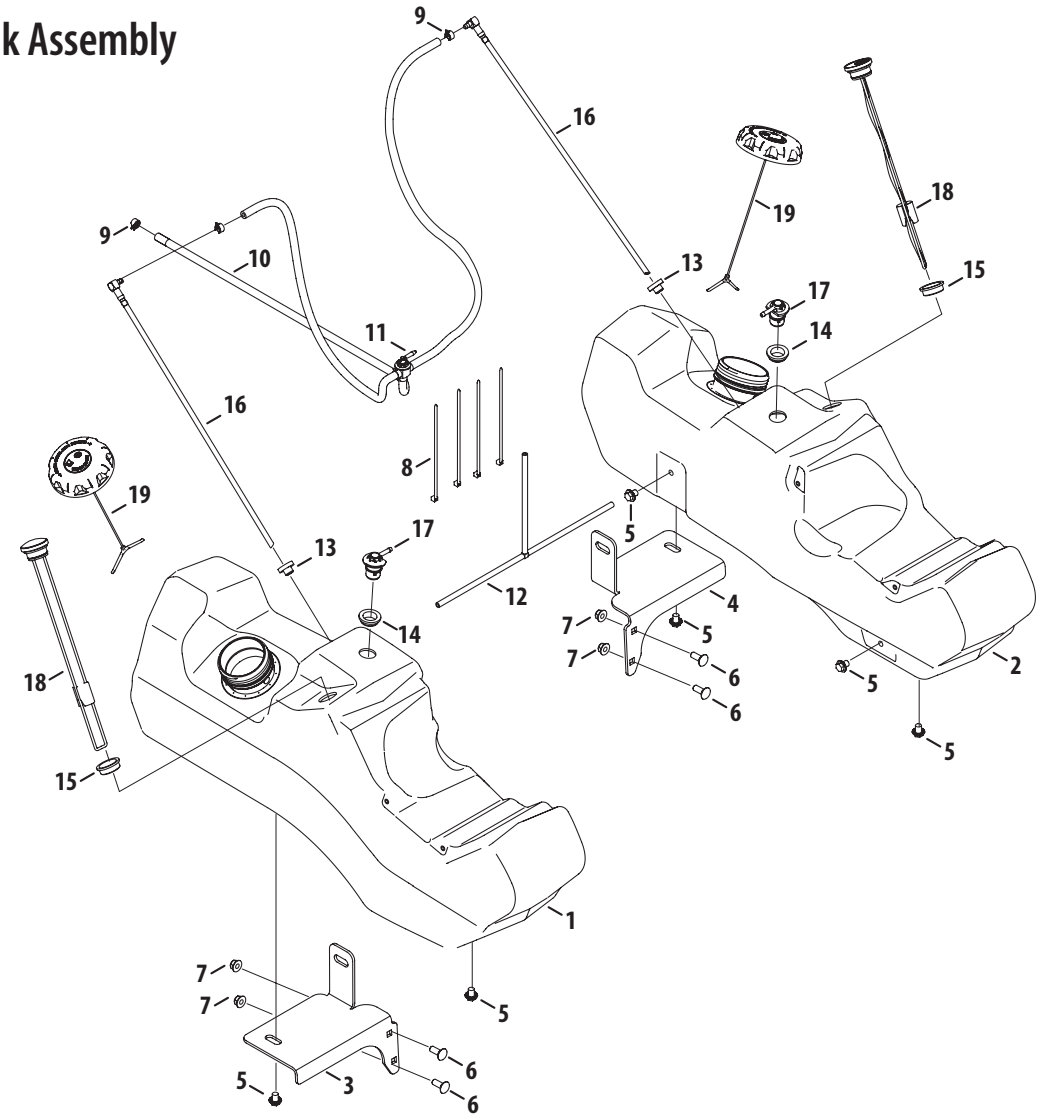

Ref.	Part Number	Description
1	651-04319	Fuel Tank Assembly, RH
2	651-04320	Fuel Tank Assembly, LH
3	703-08484	Rear Fuel Bracket, RH
4	703-08495	Rear Fuel Bracket, LH
5	710-05412	Hex Cap Screw, 3/8-16 x .500
6	710-3168	Carriage Bolt, 3/8-16 x .500
7	712-04065	Nut, 3/8-16, Flangelock
8	725-0157	Cable Tie
9	726-04123A	Hose Clamp, .500 Dia.
10	751-10349-84	Fuel Hose., 1/4
11	751-12484	Fuel Switch

Ref.	Part Number	Description
12	751-12282	Fuel Hose Assembly includes:
	- -	Hose, 3/16" Fuel Line (in inches)
	737-04341	Tee Fitting, Fuel
13	02002253	Grommet, Fuel Tank
14	735-04081	Rubber Grommet
15	735-0699	Grommet, 1.58 OD x 1.21 ID x .5
16	751-12117	Fuel Pickup Valve
17	751-12118	Fuel Rollover Valve
18	751-12366	Fuel Gauge
19	751-12754	Fuel Cap

Fuel Tank Assembly (Cal.)

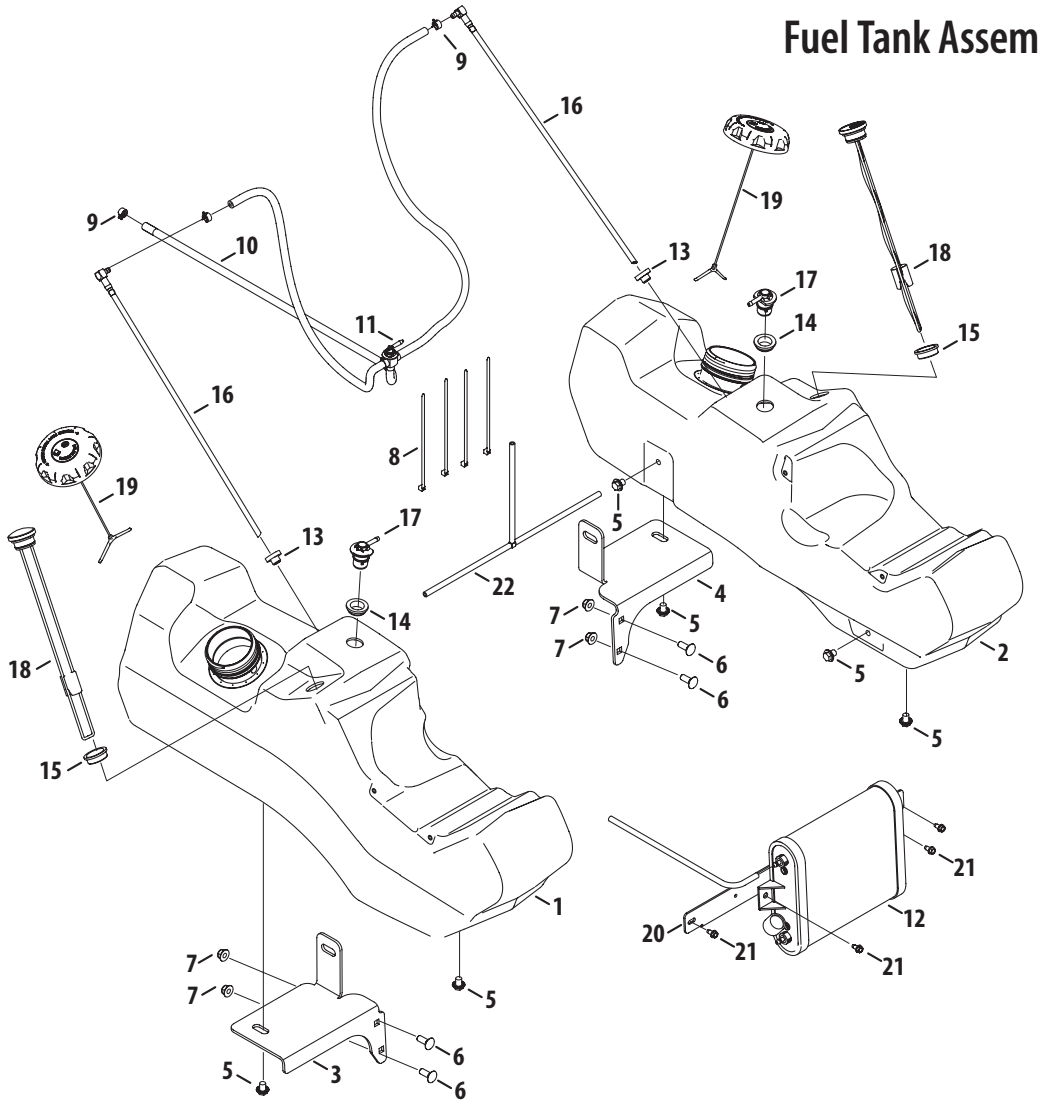

Ref.	Part Number	Description
1	651-04319	Fuel Tank Assembly, RH
2	651-04320	Fuel Tank Assembly, LH
3	703-08484	Rear Fuel Bracket, RH
4	703-08495	Rear Fuel Bracket, LH
5	710-05412	Hex Cap Screw, 3/8-16 x .500
6	710-3168	Carriage Bolt, 3/8-16 x .500
7	712-04065	Nut, 3/8-16, Flangelock
8	725-0157	Cable Tie
9	726-04123A	Hose Clamp, .500 Dia.
10	751-10349-84	Fuel Hose., 1/4
11	751-12484	Fuel Switch
12	751-12780	Carbon Canister

Ref.	Part Number	Description
13	02002253	Grommet, Fuel Tank
14	735-04081	Rubber Grommet
15	735-0699	Grommet, 1.58 OD x 1.21 ID x .5
16	751-12117	Fuel Pickup Valve
17	751-12118	Fuel Rollover Valve
18	751-12366	Fuel Gauge
19	751-12754	Fuel Cap
20	703-08805	Canister Bracket
21	710-0599	Screw, 1/4-20 x .500
22	751-12282	Fuel Hose Assembly includes:
	- -	Hose, 3/16" Fuel Line (in inches)
	737-04341	Tee Fitting, Fuel

Control Assembly

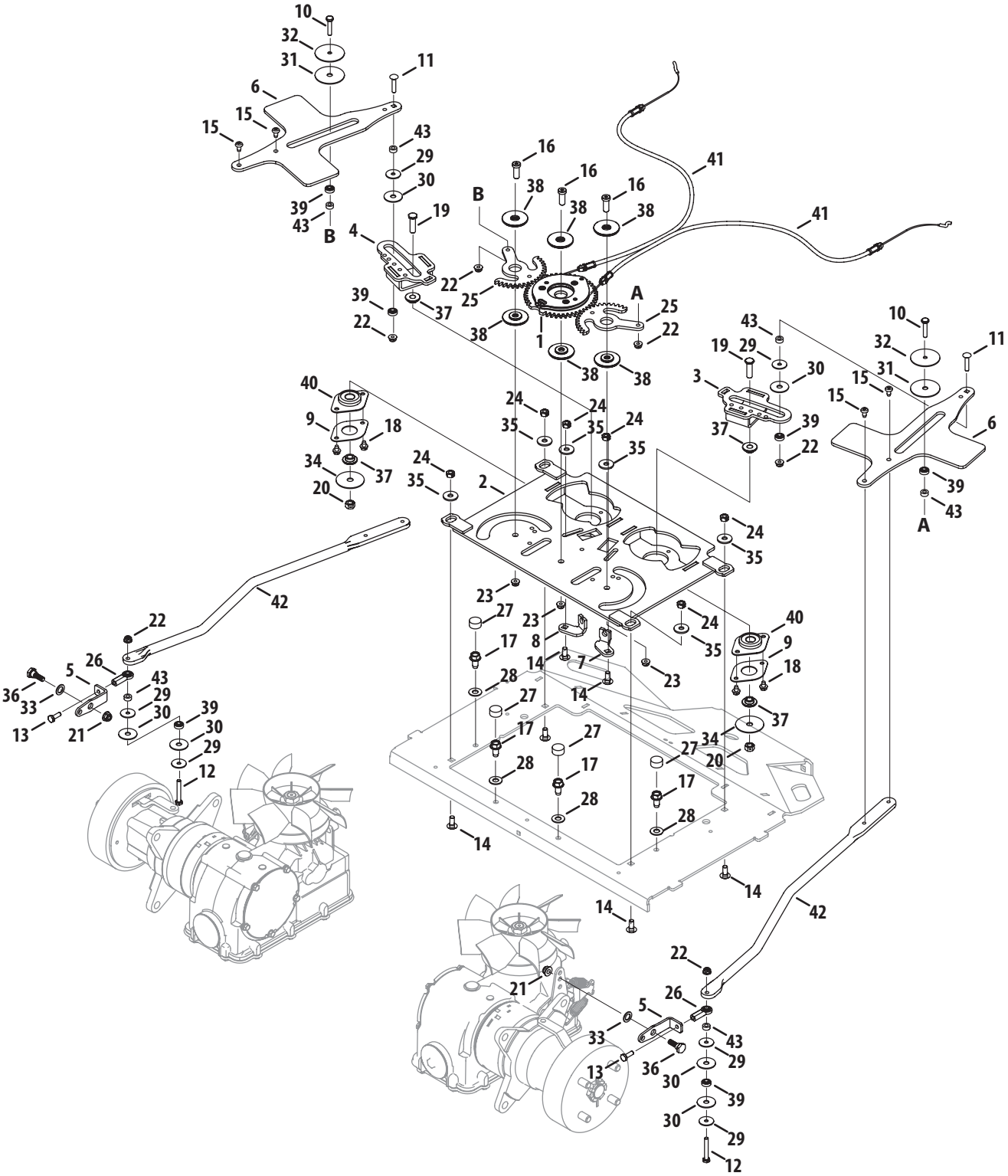

Ref.	Part Number	Description
1	680-00144	Pump Control Gear
2	680-00226A	Pump Control Mounting Plate
3	680-00240	Pump Control Cam Assembly, RH
4	680-00241	Pump Control Cam Assembly, LH
5	703-07439	Pump Control Bracket
6	703-07803	Pump Steering Arm Actuator
7	703-08559	Steering Cable Bracket
8	703-08561	Steering Cable Bracket
9	703-08814	Retainer Bearing Plate
10	710-0106	Hex Cap Screw, 1/4-20 x 1.25
11	710-0111	Carriage Screw, 1/4-20 x 1.25
12	710-0136	Hex Cap Screw, 1/4-20 x 1.75
13	710-0412	Hex Cap Screw, 1/4-28 x .75
14	710-0451	Carriage Bolt, 5/16-18 x .75
15	710-05070	Screw, 1/4-20 x .500
16	710-05340	Socket Head Screw, 3/8-16 x 1.00
17	710-0623	Screw, 3/8-16 x .75
18	710-0653	Screw, 1/4-20 x .375
19	710-0723	Hex Cap Screw, 3/8-16 x 1.25
20	712-0375	Nut, 3/8-16, Hexlock
21	712-04063	Nut, 5/16-18, Flangelock
22	712-04064	Nut, 1/4-20, Flangelock

Ref.	Part Number	Description
23	712-04065	Nut, 3/8-16, Flnagelock
24	912-3009	Nut, 5/16-18, Hexlock
25	917-04825	Yoke Steering Gear
26	723-04077	Rod End, 1/4-28
27	731-1490	Slide Cap
28	936-0300	Washer, .406 x .875 x .059
29	736-04511	Washer, .255 x 1.00 x .060
30	736-04596	Washer, .355 x 1.25 x .060
31	736-04630	Washer, .356 x 2.00 x .060
32	736-04631	Washer, .260 x 2.00 x .060
33	736-3024	Washer, .469 x .75 x .060
34	736-3040	Washer, .406 x 1.92 x .060
35	736-3089	Washer, .345 x 1.00 x .100
36	938-0296	Shoulder Screw, .437 x .268, 5/16-18
37	738-04154	Shoulder Spacer, .38 x 1.00 x .31
38	738-04453	Shoulder Spacer, .853 x .385 x .100
39	741-04425	Ball Bearing, .250 x .625
40	741-04566	Ball Bearing, .625
41	746-04739A	Transmission Link Control Cable
42	747-05649	Pump Control Rod
43	750-05297	Spacer, .256 x .500 x .240

Front Axle Assembly

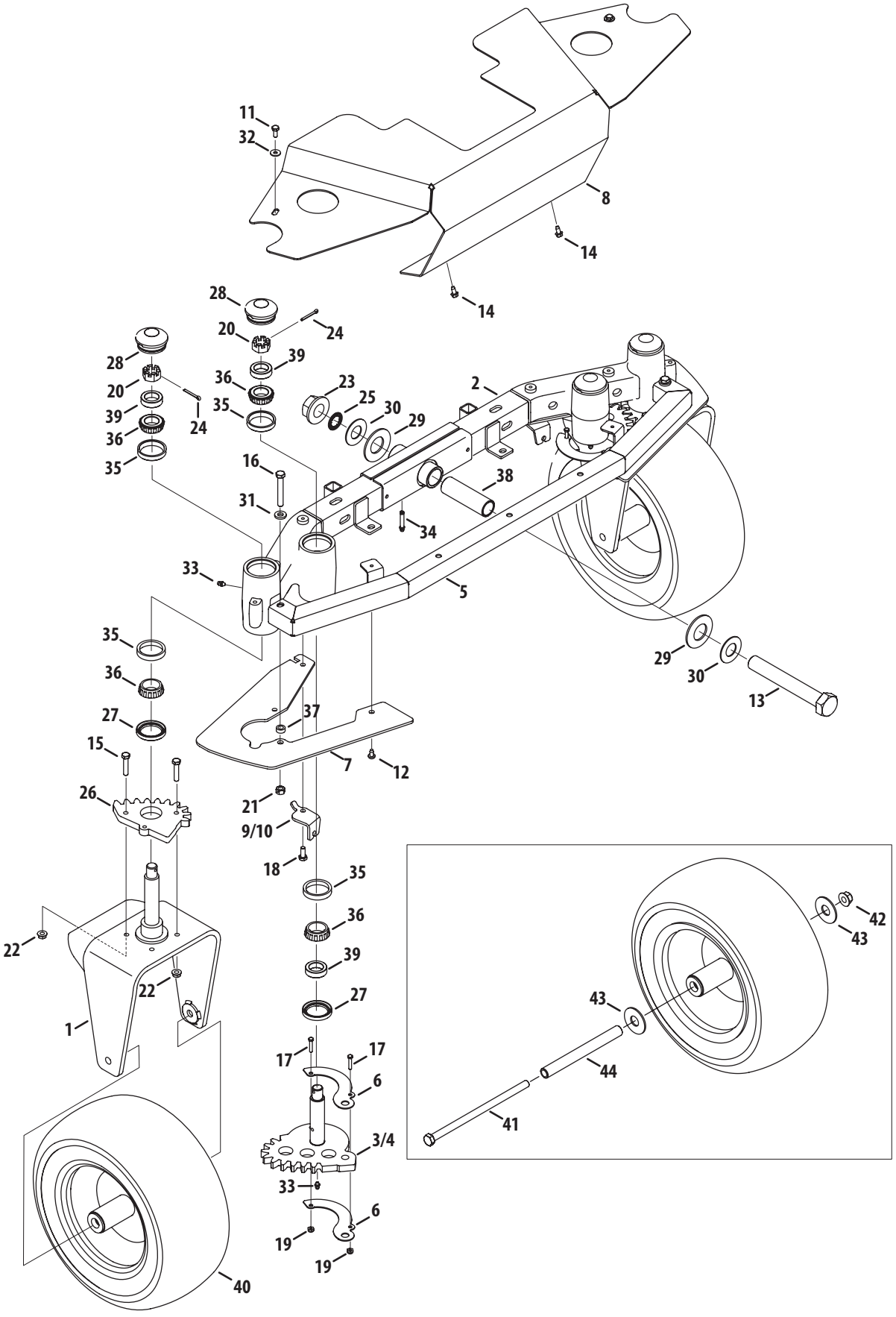

Ref.	Part Number	Description
1	680-00138	Yoke Assembly
2	680-00153	Axle Assembly
3	680-00154	LH Steering Gear
4	680-00155	RH Steering Gear
5	680-00165	Front Bumper
6	703-07931A	Gear Cable Mounting Bracket
7	703-08383	Gear Panel Cover
8	703-08396	Axle Cover
9	703-08800	RH Steering Cable Bracket
10	703-08801	LH Steering Cable Bracket
11	710-0433	Hex Cap Screw, 1/4-20 x .625
12	710-05070	Screw, ¼-20 x .5
13	710-05189	Hex Cap Screw, 1-14 x 7.0
14	710-0599	Hex Flange Screw, ¼-20 x .500
15	710-0805	Hex Cap Screw, 5/16-18 x 1.50
16	710-0859	Hex Cap Screw, 3/8-16 x 2.50
17	710-1194	Machine Screw, #10-24 x 1.00
18	710-1880	Hex Cap Screw, 5/16-18 x .75
19	712-0161	Nut, #10-24, Hexlock
20	712-0359	Nut, 3/4-16, Slotted
21	712-0375	Nut, 3/8-16, Hexlock
22	712-04054	Nut, 5/16-18, Flangelock

Ref.	Part Number	Description
23	712-04310	Nut, 1.0-14, Flangelock
24	714-0162	Cotter Pin, 5/32 x 1.25
25	716-04191	Retainer Ring
26	917-04822	Steering Gear
27	721-04462	Seal, 14858
28	731-07348	Axle Grease Cap
29	736-04604	Bell Washer, 1.25 x 2.50 x .180
30	736-04605	Washer, 1.00 x 2.00 x .075
31	736-3010	Washer, .407 x .812 x .135
32	736-3090	Washer, .260 x .720 x .060
33	737-04345	Grease Fitting, 1/4-28
34	737-04352	Grease Fitting, 1 39/64
35	741-04548	Cup Bearing
36	741-04549	Cone Bearing
37	750-04776	Spacer, .380 x .625 x .265
38	750-05438	Spacer, 1.005 x 1.247 x 4.1
39	750-05600	Spacer, 1.00 x 1.50 x .437
40	634-04704-0931	Wheel Assembly, 15 x 6.5-8
41	710-05374	Hex Cap Screw, 1/2-13 x 9.5
42	712-04150	Nut, 1/2-13, Flangelock
43	736-3014	Washer, .781 x 2.00 x .105
44	750-05595	Spacer, .51 x .750 x 7.38

Steering Column

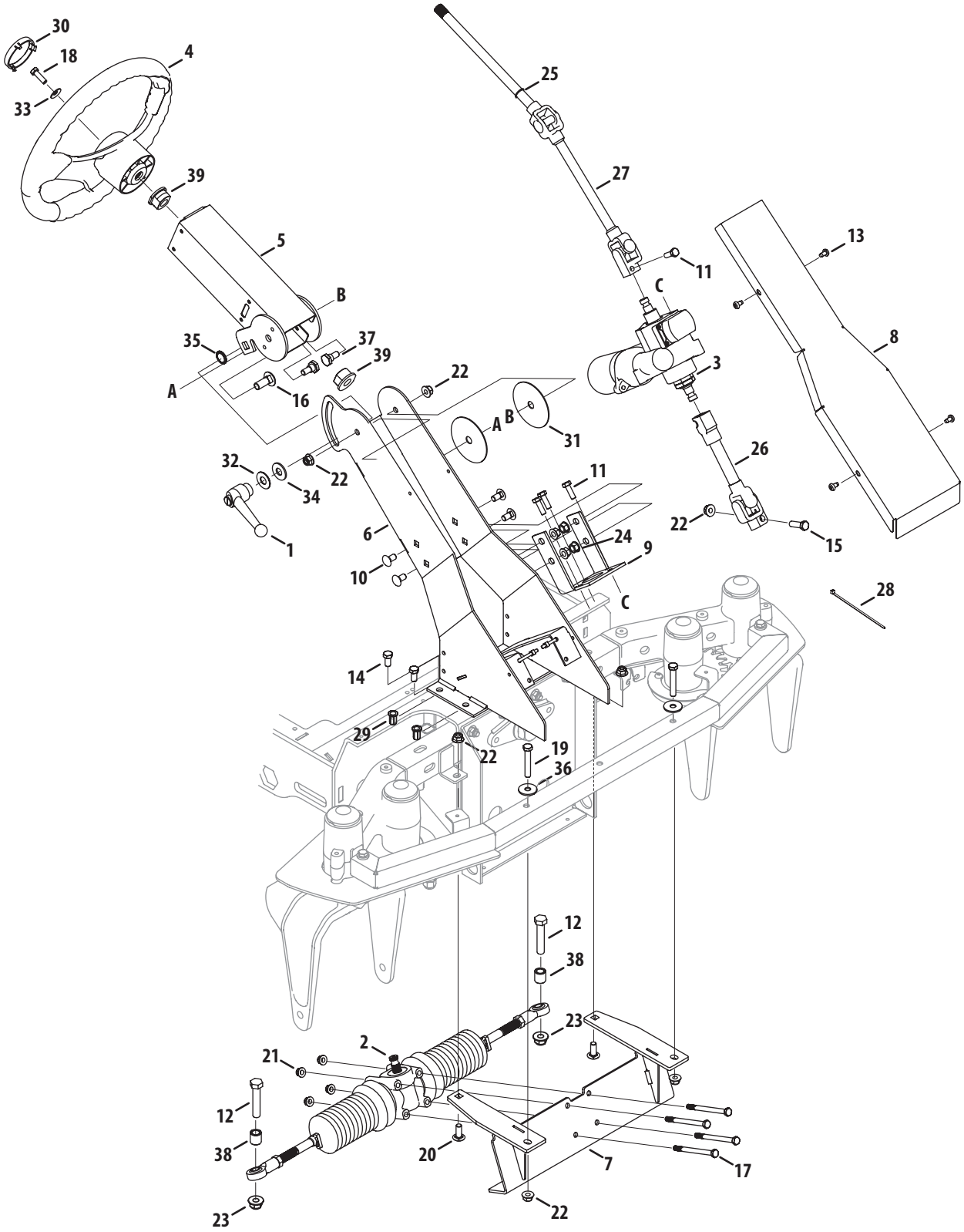

Ref.	Part Number	Description
1	02005058	Steering Column Adjustment Lever
2	617-04088	Steering Gearbox
3	618-04994	Power Steering Arm
4	631-04556	Steering Wheel
5	680-00195	Upper Column
6	680-00203	Base Column
7	680-00207	Steering Rack Mount
8	703-08320	Front Column Cover
9	703-08626	Power Steering Mount
10	710-0389	Carriage Bolt, 3/8-16 x .750
11	710-04629	Hex Cap Screw, M8-1.25 x 25.0
12	710-04824	Hex Cap Screw, 1/2-13 x 2.5
13	710-05070	Screw, 1/4-20 x .500
14	710-0514	Hex Cap Screw, 3/8-16 x 1.00
15	710-0520	Hex Cap Screw, 3/8-16 x 1.50
16	710-05375	Carriage Bolt, 1/2-13 x 1.25
17	710-05410	Hex Cap Screw, 5/16-18 x 4.00
18	710-0643	Hex Cap Screw, 5/16-18 x 1.00
19	710-0859	Hex Cap Screw, 3/8-16 x 2.50
20	710-3168	Carriage Bolt, 3/8-16 x 1.00

Ref.	Part Number	Description
21	712-04063	Nut, 5/16-18, Flangelock
22	712-04065	Nut, 3/8-16, Flnagelock
23	712-04150	Nut, 1/2-13, Flangelock
24	912-0431	Nut, 3/8-16, Flangelock
25	916-0171	Retainer Ring, .625
26	917-04872	Steering Shaft, Bottom
27	917-04905	Steering Shaft, Top
28	725-0157	Cable Tie
29	728-04062	Rivet, 3/8-16
30	731-04039	Cap, No Sprig
31	731-08236	Column Wear Plate
32	936-0179	Washer, .531 x 1.25 x .100
33	736-0242	Bevel Washer, .340 x .872 x .060
34	736-04602	Washer, .640 x 1.25 x .050
35	936-0760	Lock Washer, 17 x 23.8 x 1.95
36	736-3052	Washer, .406 x 1.00 x .105
37	738-0143	Shoulder Bolt, .496 x .336, 3/8-16
38	748-0190	Spacer, .508 x .75 x .68
39	948-0209	Flange Bearing, .63 x 1.15

Pedal Controls

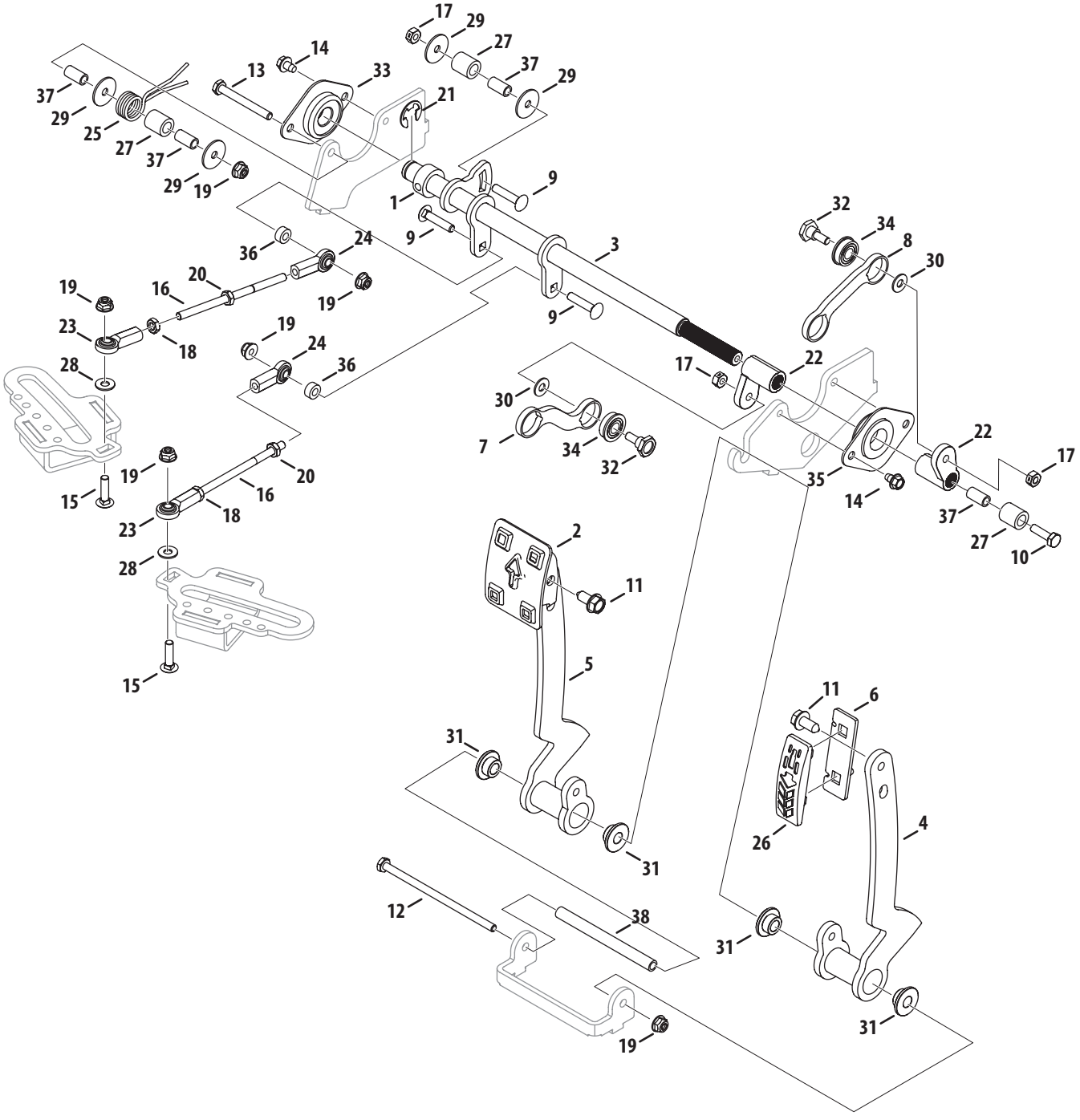

Ref.	Part Number	Description
1	01006350	Shaft Collar, .625 x 1.0 x .438
2	603-04752	Forward Pedal Assembly
3	680-00145	Speed Control Arm Assembly
4	680-00187A	Reverse Pedal Assembly
5	680-00189A	Forward Pedal Assembly
6	703-08518	Reverse Pedal Bracket
7	703-08782	Forward Pedal Link
8	703-08783	Reverse Pedal Link
9	710-0111	Carriage Screw, 1/4-20 x 1.25
10	710-1224	Hex Cap Screw, 1/4-20 x 1.25
11	710-04484	Screw, 5/16-18 x .750
12	710-05418	Hex Cap Screw, 1/4-20 x 5.00
13	710-0641	Hex Cap Screw, 1/4-20 x 2.25
14	710-0653	Screw, 1/4-20 x .375
15	710-0932A	Carriage Screw, 1/4-20 x 1.00
16	711-05493	Speed Control Link Rod
17	712-0291	Nut, 1/4-20, Hexlock
18	712-0314	Jam Nut, 1/4-28
19	712-04064	Nut, 1/4-20, Flangelock

Ref.	Part Number	Description
20	712-04326	Jam Nut, 1/4-28, LH
21	716-0106A	E-Ring, .625
22	718-04858	Pedal Shaft Arm
23	723-04077	Rod End, 1/4-28
24	723-04088	Rod End, 1/4-28, LH
25	732-04955	Torsion Spring, .70 ID
26	735-04113	Foot Pad
27	750-0807	Spacer, .385 x .625 x .700
28	736-04446	Washer, .250 x .630 x .052
29	736-04511	Washer, .255 x 1.00 x .060
30	936-3020	Washer, .271 x .630 x .065
31	738-04503	Shoulder Spacer, .38 x .62 x 1.00
32	738-1023	Shoulder Screw, .375 x .280, 1/4-20
33	741-04566	Ball Bearing, .625
34	741-04568	Bearing, .375 x .875 x .281
35	741-04569	Ball Bearing, .750
36	750-05297	Spacer, .256 x .500 x .240
37	750-05369	Spacer, .260 x .375 x .75
38	750-05666	Spacer, .255 x .375 x 4.28

Deck Lift Assembly

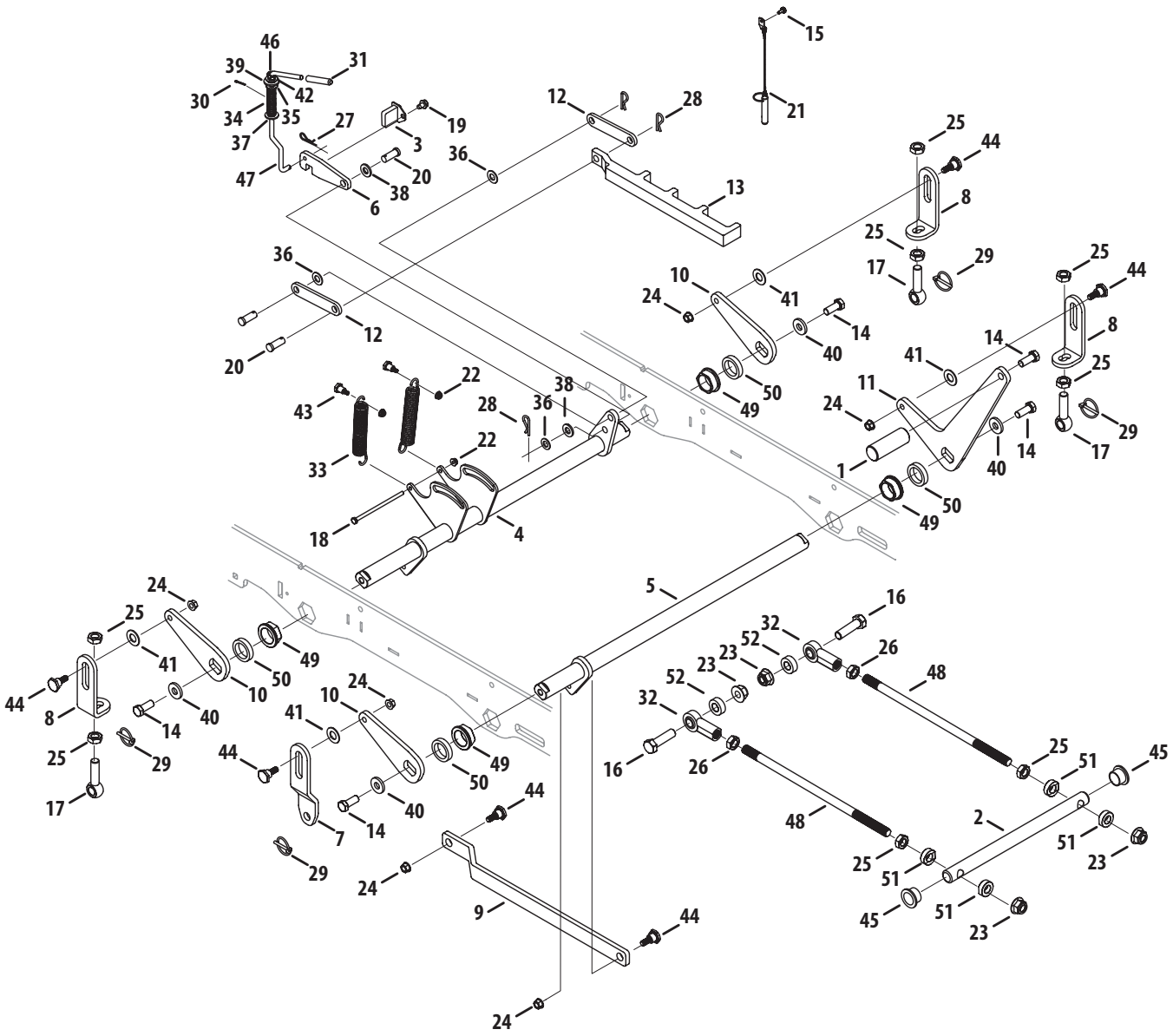

Ref.	Part Number	Description
1	02002596	Deck Lift Foot Pedal
2	02004227	Traillink Pivot Rod
3	680-00158	Lift Lock Mount
4	680-00159A	Deck Lift Shaft
5	680-00160	Deck Lift Shaft, Front
6	703-08032	Latch Lock Bracket
7	703-08060	Lift Link Arm
8	703-08062	Deck Adjustment Lift Link Arm
9	703-08063	Deck Lift Bar, Front
10	703-08070	Deck Lift Bellcrank
11	703-08252	Deck Lift Foot Pedal
12	703-08384	Deck Index Link Arm
13	703-08388A	Lift Index Slider Arm
14	710-04186	Hex Cap Screw, 1/2-13 x 1.25
15	1767754	Screw, #10-24 x .500
16	710-05000	Hex Cap Screw, 5/8-11 x 2.25
17	710-05355	Eye Bolt, 5/8-18 x 2.63
18	710-05418	Hex Cap Screw, 1/4-20 x 5.00
19	710-0607	Screw, 5/16-18 x .500
20	711-04061	Clevis Pin, .500 x 1.25
21	711-05629	Clevis Pin, .438 x 1.5
22	712-04064	Nut, 1/4-20, Flangelock
23	712-04151	Nut, 5/8-11, Flangelock
24	912-0431	Nut, 3/8-16, Flangelock
25	912-3015	Jam Nut, 5/8-11
26	712-3056	Jam Nut, 5/8-18

Ref.	Part Number	Description
27	914-0145	Click Pin, .092 x 1.64
28	914-0149B	Internal Cotter Pin
29	753-04070	Lynch Pin, .1875
30	914-0507	Cotter Pin, 3/32 x .750
31	720-04183	Lift Handle Grip
32	723-04050	Ball Joint, .625 ID x 5/8-18
33	732-04929	Extension Spring, .969 OD x 6.180
34	732-0992	Compression Spring, .656 OD x 2.445
35	736-0242	Bevel Washer, .340 x .872 x .060
36	936-0272	Washer, .510 x 1.00 x .125
37	936-0289	Shoulder Bushing, .320 ID x .135
38	936-0326	Washer, .510 x 1.00 x .125
39	736-0366	Washer, .640 x 1.20 x .125
40	736-04019	Washer, .531 x 1.25 x .181
41	736-04602	Washer, .640 x 1.25 x .050
42	736-3068	Washer, .531 x .875 x .060
43	738-04222	Shoulder Screw, .437 x .50, 1/4-20
44	738-1127	Shoulder Screw, .625 x .442, 3/8-16
45	741-04552	Bushing, 1.00 x 1.50 x .750
46	941-0475	Bearing, .385 ID
47	747-05465	Lift Lock Rod
48	747-05683	Deck Rod, .625 Dia.
49	948-3051	Hex Flange Bearing
50	750-05468	Spacer, 1.27 x 1.75 x .375
51	750-05621	Spacer, .635 x 1.188 x .406
52	950-0960A	Spacer, .635 x 1.25 x .445

Engine Accessories (Kohler)

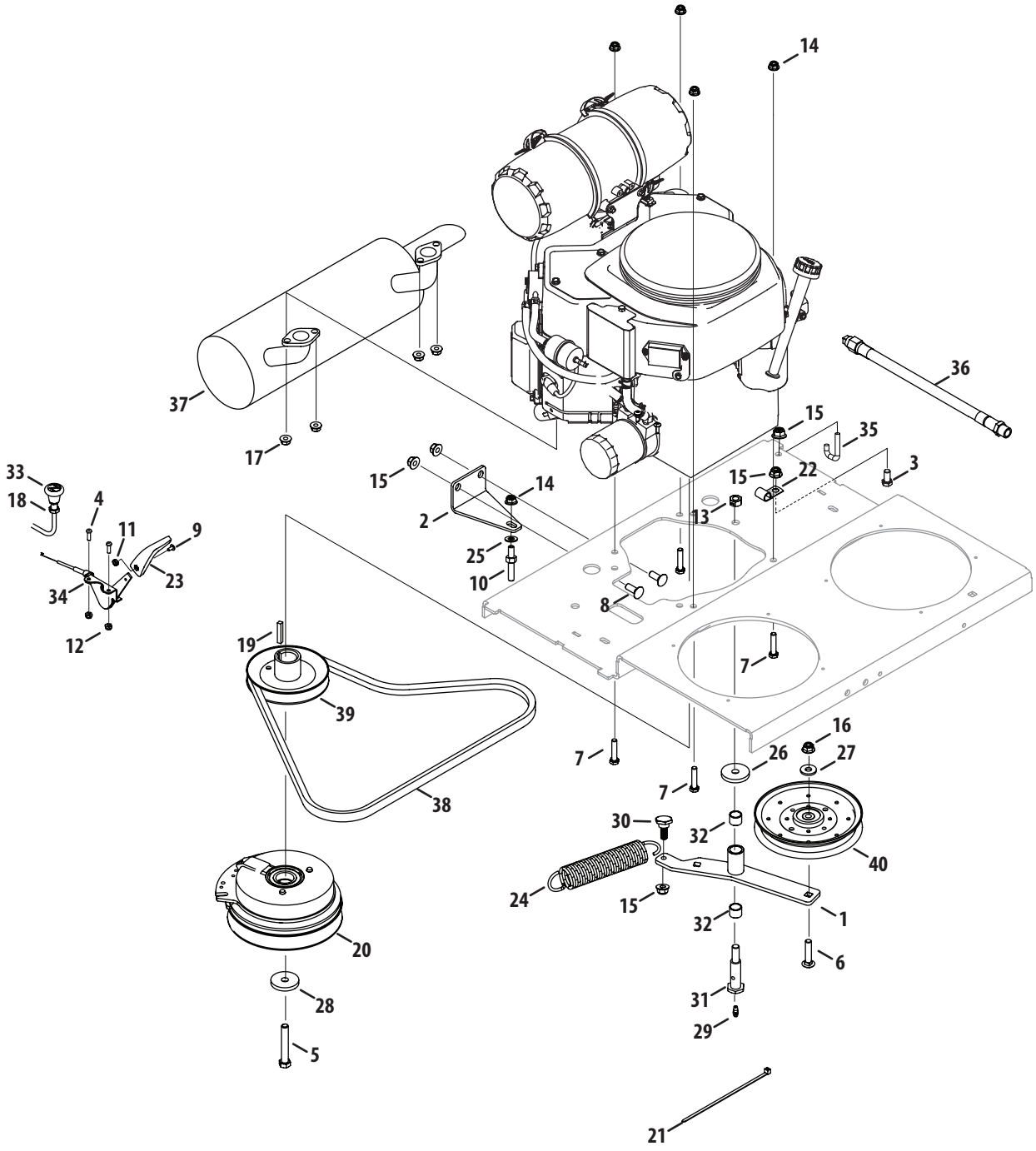

Ref.	Part Number	Description
1	680-00227A	Idler Bracket
2	703-08607	Clutch Retainer Bracket
3	710-0216	Hex Cap Screw, 3/8-16 x .75
4	710-0425	Screw, #10-24 x .625
5	710-04377	Hex Cap Screw, 7/16-20 x 2.75
6	710-05376	Carriage Bolt, 3/8-16 x 1.00
7	710-0805	Hex Cap Screw, 5/16-18 x 1.50
8	710-3168	Carriage Bolt, 3/8-16 x 1.00
9	710-3217	Screw, #8-32 x .375
10	711-1637	Stud, Pivot Ball Joint
11	712-0142	Nut, #8-32, Hex
12	712-0161	Nut, #10-24, Hexlock
13	712-0290	Nut, 7/16-14, Hexlock
14	712-04063	Nut, 5/16-18, Flangelock
15	712-04065	Nut, 3/8-16, Flangelock
16	912-0431	Nut, 3/8-16, Flangelock
17	712-04312	Nut, M8-1.25, Hexlock
18	712-0711	Jam Nut, 3/8-24
19	714-0118	Key, 1/4 x 1.50
20	917-04967	Electric PTO Clutch
21	725-0157	Cable Tie
22	726-04124	Clip, .407 x 1.80
23	731-04914	Throttle Control Knob
24	732-04915A	Extension Spring, 1.5 x 7.5
25	936-0275	Washer, .344 x .688 x .065
26	736-3017	Washer, .471 x 1.50 x .225
27	736-3052	Washer, .406 x 1.00 x .105
28	736-3082A	Washer, .471 x 1.50 x .225
29	937-0146	Grease Fitting
30	738-1126	Shoulder Screw, .625 x .302, 3/8-16
31	01000302	Shoulder Bolt, .625 x 1.947, 7/16-14
32	741-04555	bearing, .638 x .753 x .615
33	946-04812	Choke Control Cable
34	946-04840	Throttle Cable
35	747-05707	Transmission Spring Hook
36	751-10291A	Oil Drain Hose
37	751-12519	Muffler
38	954-04320	Belt
39	756-04480	Drive Pulley
40	756-04487	Idler Pulley

Engine Accessories (Kawasaki)

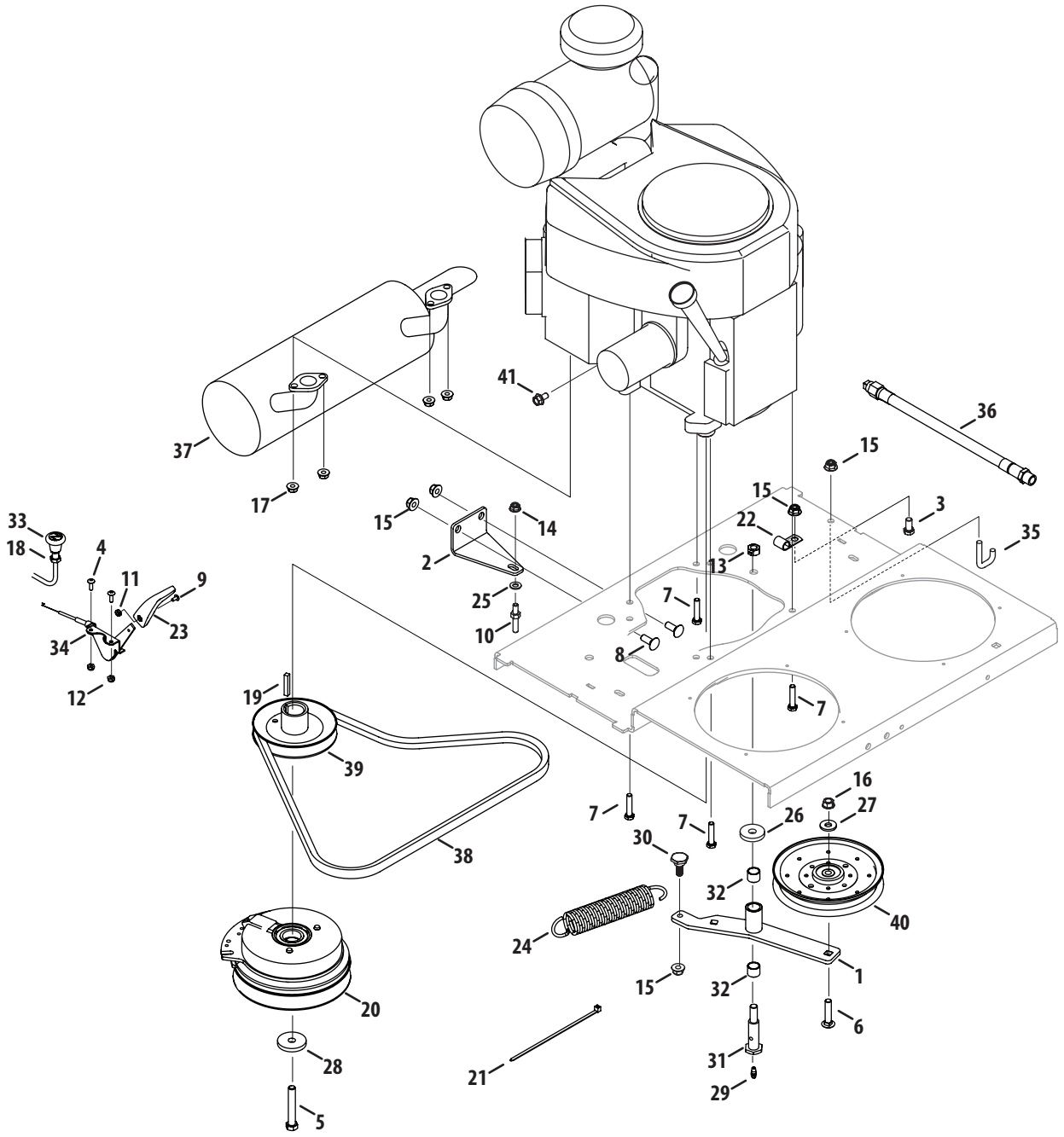

Ref.	Part Number	Description
1	680-00227A	Idler Bracket
2	703-08607	Clutch Retainer Bracket
3	710-0216	Hex Cap Screw, 3/8-16 x .75
4	710-0425	Screw, #10-24 x .625
5	710-04377	Hex Cap Screw, 7/16-20 x 2.75
6	710-05376	Carriage Bolt, 3/8-16 x 1.00
7	710-3120	Hex Cap Screw, 3/8-16 x 1.50
8	710-3168	Carriage Bolt, 3/8-16 x 1.00
9	710-3217	Screw, #8-32 x .375
10	711-1637	Stud, Pivot Ball Joint
11	712-0142	Nut, #8-32, Hex
12	712-0161	Nut, #10-24, Hexlock
13	712-0290	Nut, 7/16-14, Hexlock
14	712-04063	Nut, 5/16-18, Flangelock
15	712-04065	Nut, 3/8-16, Flangelock
16	912-0431	Nut, 3/8-16, Flangelock
17	712-04312	Nut, M8-1.25, Hexlock
18	712-0711	Jam Nut, 3/8-24
19	714-0118	Key, 1/4 x 1.50
20	917-04967	Electric PTO Clutch
21	725-0157	Cable Tie
22	726-04124	Clip, .407 x 1.80
23	731-04914	Throttle Control Knob
24	732-04915A	Extension Spring, 1.5 x 7.5
25	936-0275	Washer, .344 x .688 x .065
26	736-3017	Washer, .471 x 1.50 x .225
27	736-3052	Washer, .406 x 1.00 x .105
28	736-3082A	Washer, .471 x 1.50 x .225
29	937-0146	Grease Fitting
30	738-1126	Shoulder Screw, .625 x .302, 3/8-16
31	01000302	Shoulder Bolt, .625 x 1.947, 7/16-14
32	741-04555	bearing, .638 x .753 x .615
33	946-04812	Choke Control Cable
34	946-04840	Throttle Cable
35	747-05707	Transmission Spring Hook
36	751-10291A	Oil Drain Hose
37	751-12520	Muffler
38	954-04320	Belt
39	756-04382	Drive Pulley
40	756-04487	Idler Pulley
41	710-04748	Hex Cap Screw, M8 x 1.25 x 16MM

48" Deck

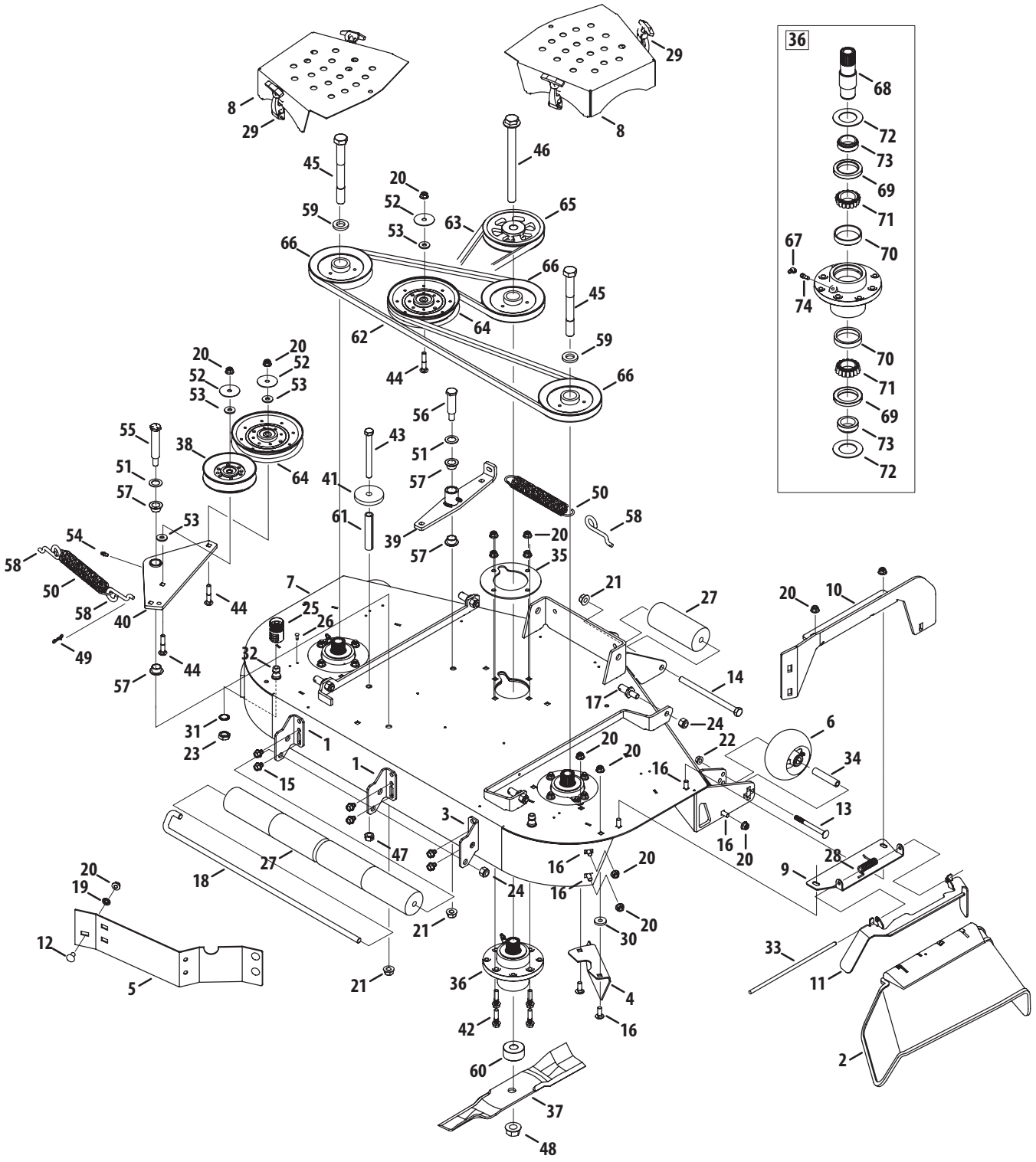
36
68
72
73
69
71
70
67
74
70
71
69
73
72
29
8
29
8
45
46
20
52
53
59
63
65
66
66
45
62
64
59
44
66
20
20
52
52
53
53
56
55
38
43
51
51
64
41
57
57
50
58
61
39
20
57
35
54
53
58
50
58
40
44
7
21
27
20
10
25
26
49
32
44
57
14
17
24
6
31
23
1
20
20
22
34
15
1
16
3
13
16
20
47
27
16
20
28
9
18
24
16
20
19
20
12
21
30
33
5
21
36
4
11
42
16
2
60
37
48

Ref.	Part Number	Description
1	01004707	Deck Roller Mount Bracket
2	01006693P	Chute Deflector
3	01008790	Roller Mount Bracket
4	01009296	Chute Baffle
5	02005695	Baffle, 48" Adjustment
6	634-3159	Complete Wheel, 5.00 Dia.
7	680-00216	48" Deck Assembly
8	703-06871	Deck Belt Cover
9	703-08091	Chute Deflector Bracket
10	703-08747	Deck Support Plate
11	703-08810	Chute Extension Bracket
12	710-0389	Carriage Bolt, 3/8-16 x .750
13	710-05384	Carriage Bolt, 3/8-16 x 4.00
14	710-05394A	Hex Cap SCrew, 1/2-13 x 7.50
15	710-0773	Screw, 3/8-16 x .500
16	710-3168	Carriage Bolt, 3/8-16 x 1.00
17	711-05604	Pin, 1/2-13 x .625 x 1.2
18	711-05664	J-Hook w/ Threaded Roller
19	712-0229	Push Nut, 3/8
20	712-04065	Nut, 3/8-16, Flangelock
21	712-04150	Nut, 1/2-13, Flangelock
22	912-0431	Nut, 3/8-16, Flangelock
23	912-0641	Hex Nut, M16-1.5
24	712-3083	Nut, 1/2-13, Hexlock
25	921-04041	Water Nozzle Adaptor
26	728-04033	Pop Rivet, 3/16
27	731-3005	Front Roller
28	732-04797	Torsion Spring, 0.639 x 2.16
29	935-04038	T-Handle Latch Draw
30	736-0280	Washer, .395 x 1.12 x .190
31	936-0760	Lock Washer, 17 x 23.8 x 1.95
32	737-04003D	Deck Water Nozzle
33	747-3384	Chute Deflector Rod
34	750-3193	Wheel Spacer
35	01004478	Spindle Support Plate
36	02000920P	Spindle Assembly
37	02005017	Hi-Lift Blade, 17.0

Ref.	Part Number	Description
38	02005079	Idler Pulley
39	680-00167A	Deck Idler Arm
40	680-00222	Idler Assembly
41	703-08855	Spacer, .5375 x 2.75 x .375
42	710-04829	Carriage Bolt, 3/8-16 x 1.5
43	710-0382	Hex Cap Screw, 1/2-13 x 5.00
44	710-04157	Carriage Bolt, 3/8-16 x 2.00
45	710-05387	Hex Cap Screw, 3/4-16 x 7.00
46	710-05388	Hex Cap Screw, 3/4-16 x 9.00
47	712-3022	Nut, 1/2-13, Hexlock
48	712-3078	Nut, 3/4-16, Flangelock
49	714-04040	Bow Tie Cotter Pin
50	732-04911	Extension Spring, 1.248 x 8.5
51	936-0287	Washer, .793 x 1.24 x .06
52	736-3040	Washer, .406 x 1.92 x .060
53	736-3052	Washer, .406 x 1.00 x .105
54	937-0146	Grease Fitting
55	738-04526	Shoulder Bolt, .75 x 3.25, 1/2-13
56	938-3110	Shoulder Bolt, .750 x 2.23, 1/2-13
57	741-0338	Flange Bearing, .75 x .52
58	747-05658	Spring Rod Hook
59	750-05553	Spacer, .812 x .218
60	750-05617	Spacer, .760 x 2.00 x .925
61	750-3213	Spacer, .405 x .75 x 3.875
62	954-04323	Deck Belt
63	954-04326	V-Belt
64	756-04487	Idler Pulley
65	756-04497	Drive Pulley
66	756-04500	Spindle Pulley
67	00021958	Grease Fitting, 45 degree, 1/4-28
68	711-3342	Spindle Shaft
69	921-0385	Seal, Oil
70	941-3050	Cup Bearing
71	941-3051	Cone Bearing
72	01003094	Washer, 1.05 x 2.52 x .076
73	01003095	Ring, Seal
74	01009101	Straight Adapter Fitting

60″ Deck

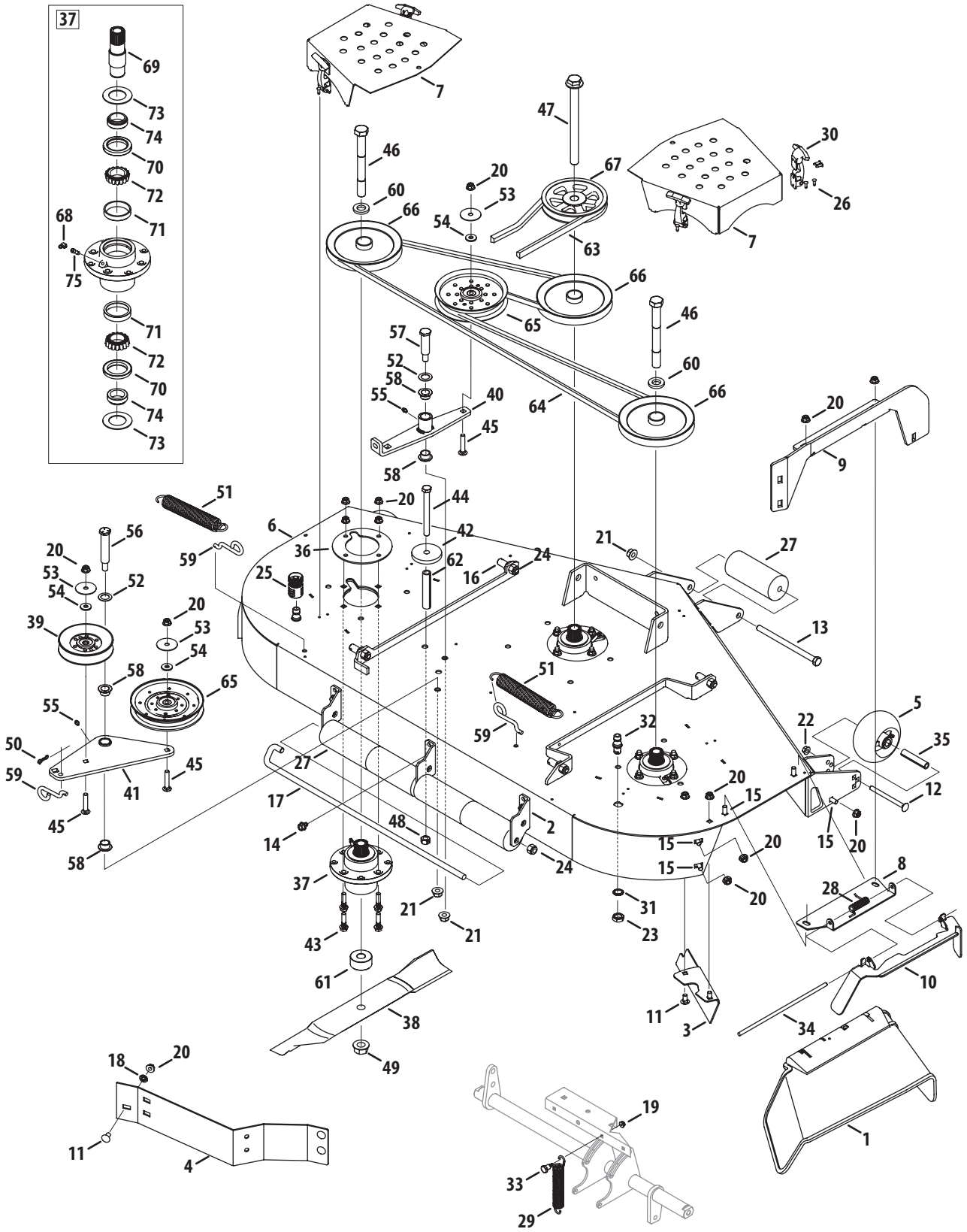
37
69
73
74
70
72
71
68
75
7
47
46
20
53
54
60
66
67
30
26
63
65
57
52
58
55
40
64
45
9
51
59
6
36
44
42
62
16
24
21
27
13
25
56
39
41
50
17
14
48
2
37
43
61
38
49
31
23
22
5
35
12
15
8
28
10
11
3
34
1
18
4
19
33
29

Ref.	Part Number	Description
1	01006693P	Chute Deflector
2	01008790	Roller Mount Bracket
3	02005195	Chute Baffle
4	02005694	Baffle, 60" Adjustment
5	634-3159	Complete Wheel, 5.00 Dia.
6	680-00217	60" Deck Assembly
7	703-06871	Deck Belt Cover
8	703-08091	Chute Deflector Bracket
9	703-08747	Deck Support Plate
10	703-08810	Chute Extension Bracket
11	710-0389	Carriage Bolt, 3/8-16 x .750
12	710-05384	Carriage Bolt, 3/8-16 x 4.00
13	710-05394A	Hex Cap SCrew, 1/2-13 x 7.50
14	710-0773	Screw, 3/8-16 x .500
15	710-3168	Carriage Bolt, 3/8-16 x 1.00
16	711-05604	Pin, 1/2-13 x .625 x 1.2
17	711-05664	J-Hook w/ Threaded Roller
18	712-0229	Push Nut, 3/8
19	712-04064	Nut, 1/4-20, Flangelock
20	712-04065	Nut, 3/8-16, Flangelock
21	712-04150	Nut, 1/2-13, Flangelock
22	912-0431	Nut, 3/8-16, Flangelock
23	912-0641	Hex Nut, M16-1.5
24	712-3083	Nut, 1/2-13, Hexlock
25	921-04041	Water Nozzle Adaptor
26	728-04033	Pop Rivet, 3/16
27	731-3005	Front Roller
28	732-04797	Torsion Spring, 0.639 x 2.16
29	732-04929	Extension Spring, .969 x 6.180
30	935-04038	T-Handle Latch Draw
31	936-0760	Lock Washer, 17 x 23.8 x 1.95
32	737-04003D	Deck Water Nozzle
33	738-04222	Shoulder Bolt, .437 x .50, 1/4-20
34	747-3384	Chute Deflector Rod
35	750-3193	Wheel Spacer
36	01004478	Spindle Support Plate
37	02000920P	Spindle Assembly
38	02005019	Hi-Lift Blade, 21.0

Ref.	Part Number	Description
39	02005079	Idler Pulley
40	680-00167A	Deck Idler Arm
41	680-00222	Idler Assembly
42	703-08855	Spacer, .5375 x 2.75 x .375
43	710-04829	Carriage Bolt, 3/8-16 x 1.5
44	710-0382	Hex Cap Screw, 1/2-13 x 5.00
45	710-04157	Carriage Bolt, 3/8-16 x 2.00
46	710-05387	Hex Cap Screw, 3/4-16 x 7.00
47	710-05388	Hex Cap Screw, 3/4-16 x 9.00
48	712-3022	Nut, 1/2-13, Hexlock
49	712-3078	Nut, 3/4-16, Flangelock
50	714-04040	Bow Tie Cotter Pin
51	732-04911	Extension Spring, 1.248 x 8.5
52	936-0287	Washer, .793 x 1.24 x .06
53	736-3040	Washer, .406 x 1.92 x .060
54	736-3052	Washer, .406 x 1.00 x .105
55	937-0146	Grease Fitting
56	738-04526	Shoulder Bolt, .75 x 3.25, 1/2-13
57	938-3110	Shoulder Bolt, .750 x 2.23, 1/2-13
58	741-0338	Flange Bearing, .75 x .52
59	747-05658	Spring Rod Hook
60	750-05553	Spacer, .812 x .218
61	750-05617	Spacer, .760 x 2.00 x .925
62	750-3213	Spacer, .405 x .75 x 3.875
63	954-04296	V-Belt
64	954-04319	Deck Belt
65	756-04487	Idler Pulley
66	756-04489	Spindle Pulley
67	756-04496A	Drive Pulley
68	00021958	Grease Fitting, 45 degree, 1/4-28
69	711-3342	Spindle Shaft
70	921-0385	Seal, Oil
71	941-3050	Cup Bearing
72	941-3051	Cone Bearing
73	01003094	Washer, 1.05 x 2.52 x .076
74	01003095	Ring, Seal
75	01009101	Straight Adapter Fitting

Electrical

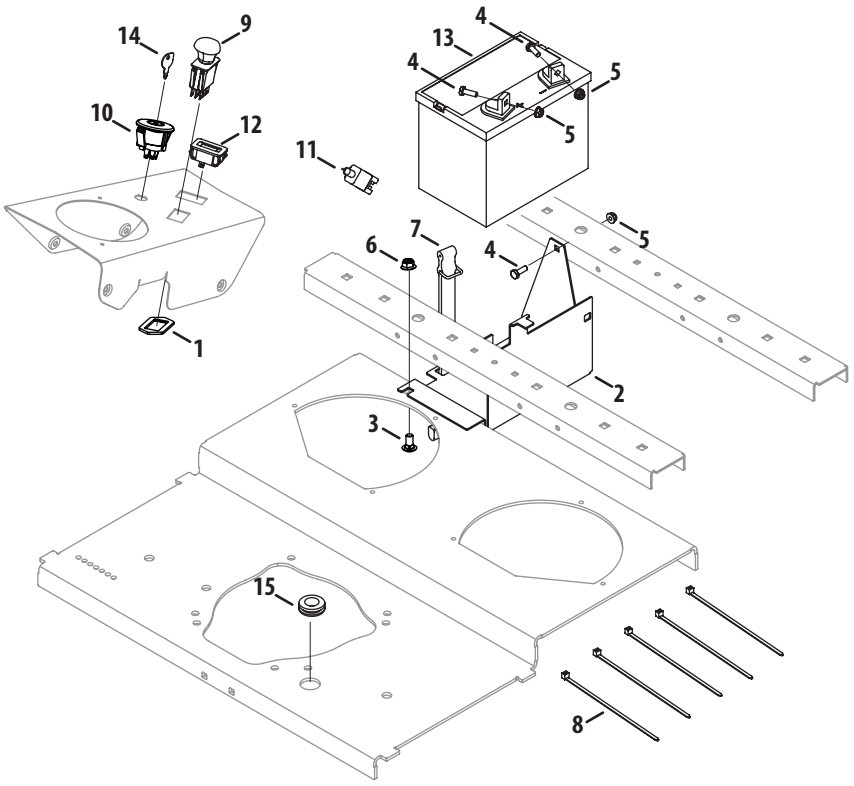

Ref.	Part Number	Description
1	01009905	PTO Switch Bracket
2	703-07855	Battery Bracket
3	710-0389	Carriage Bolt, 3/8-16 x .750
4	710-3015	Hex Cap Screw, 1/4-20 x .75
5	712-04064	Nut, 1/4-20, Flangelock
6	712-04065	Nut, 3/8-16, Flangelock
7	723-3064	Battery Strap
8	725-0157	Cable Tie
9	925-04174	Electric PTO Switch

Ref.	Part Number	Description
10	925-04228	Key Switch
11	725-05113	Plunger Switch, NO/NC
12	725-05438	Hour Meter
13	925-1707D	Battery
14	925-2054A	Key
15	735-04285	Rubber Grommet, .75 x 1.062 x .50
NS	929-04180	Wire Harness
NS	929-04195	Hour Meter Harness
NS	02002822	Wire Harness Adaptor, (Kaw. only)

Electrical Schematic

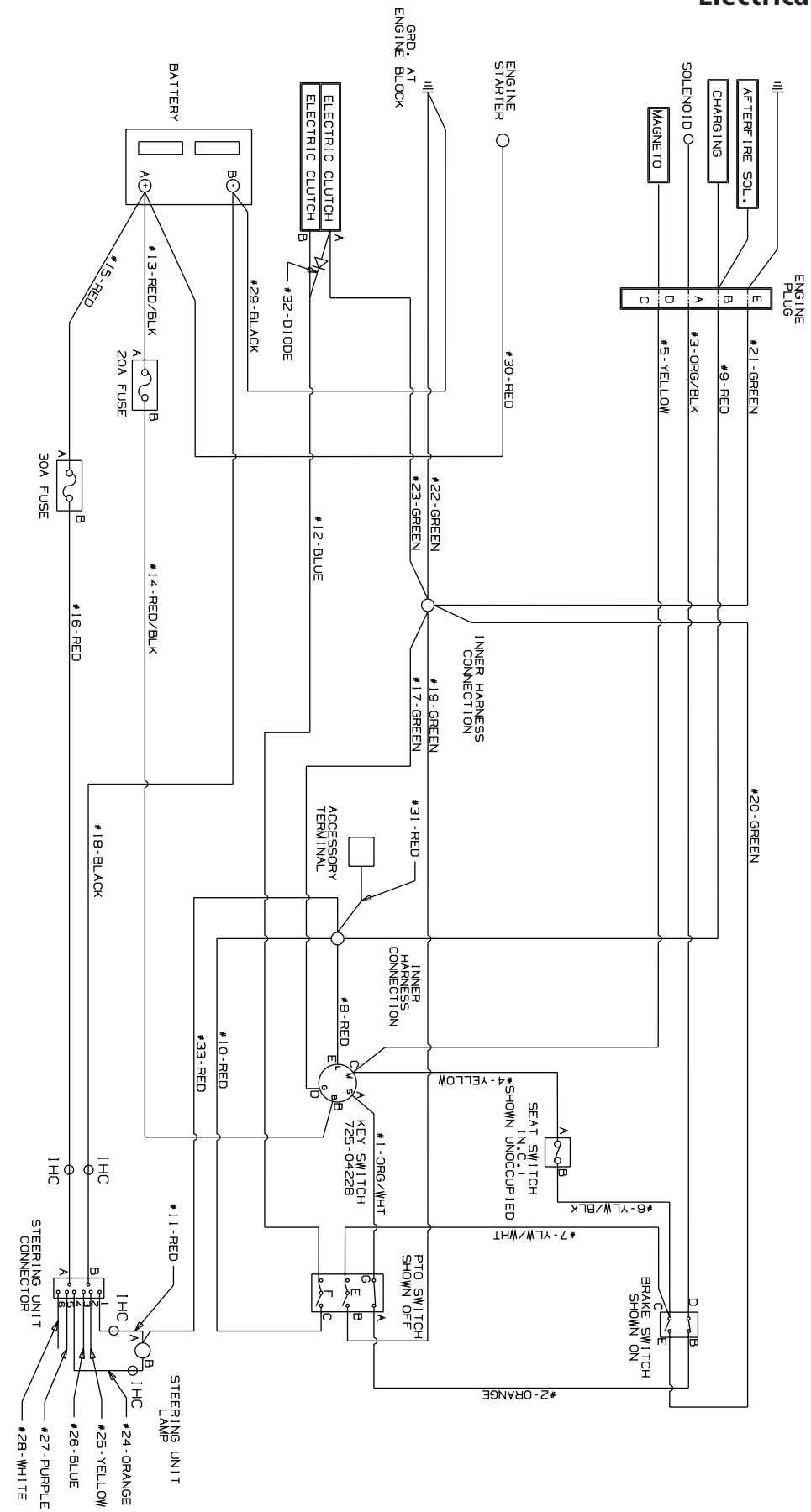

TANK SZ Labels

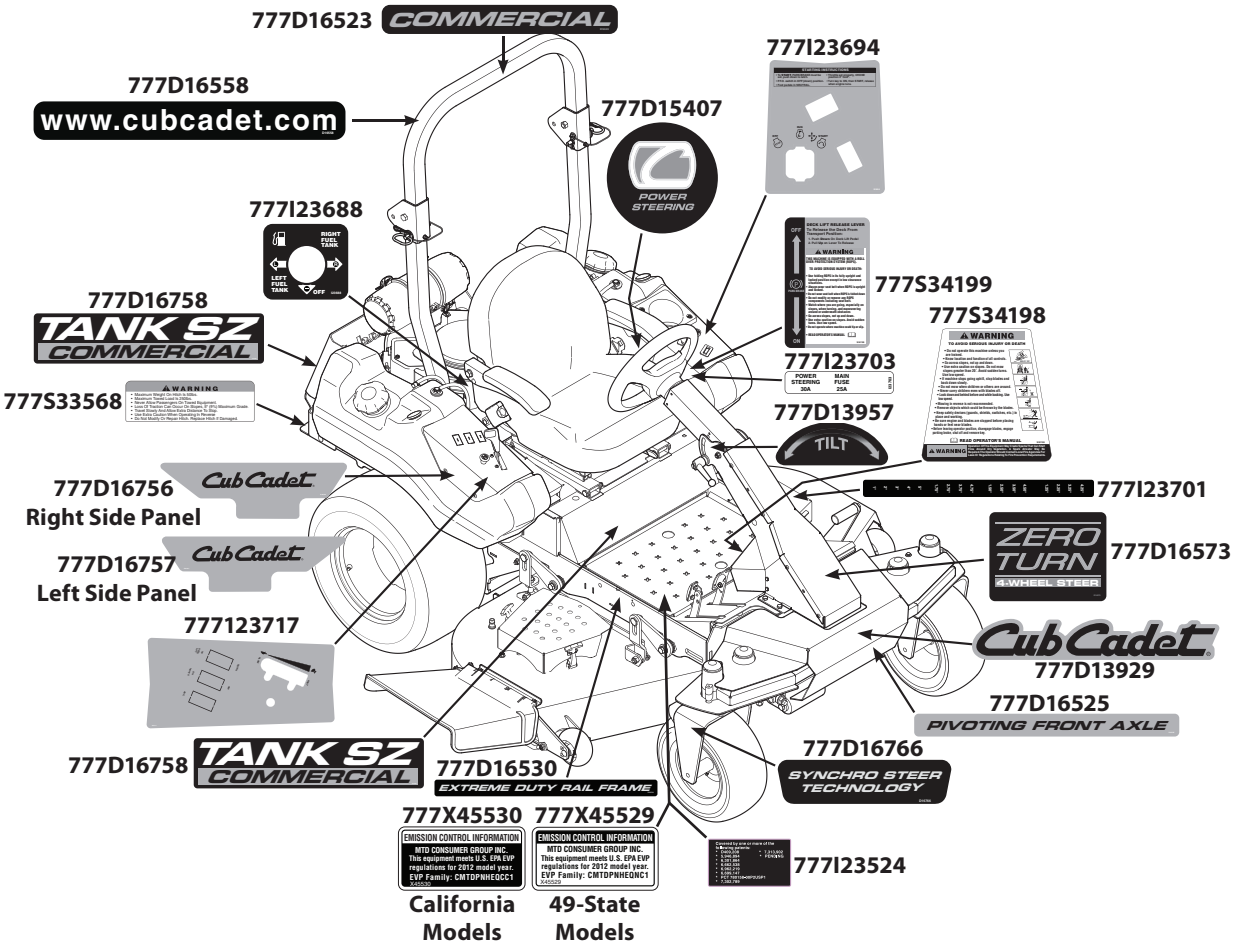

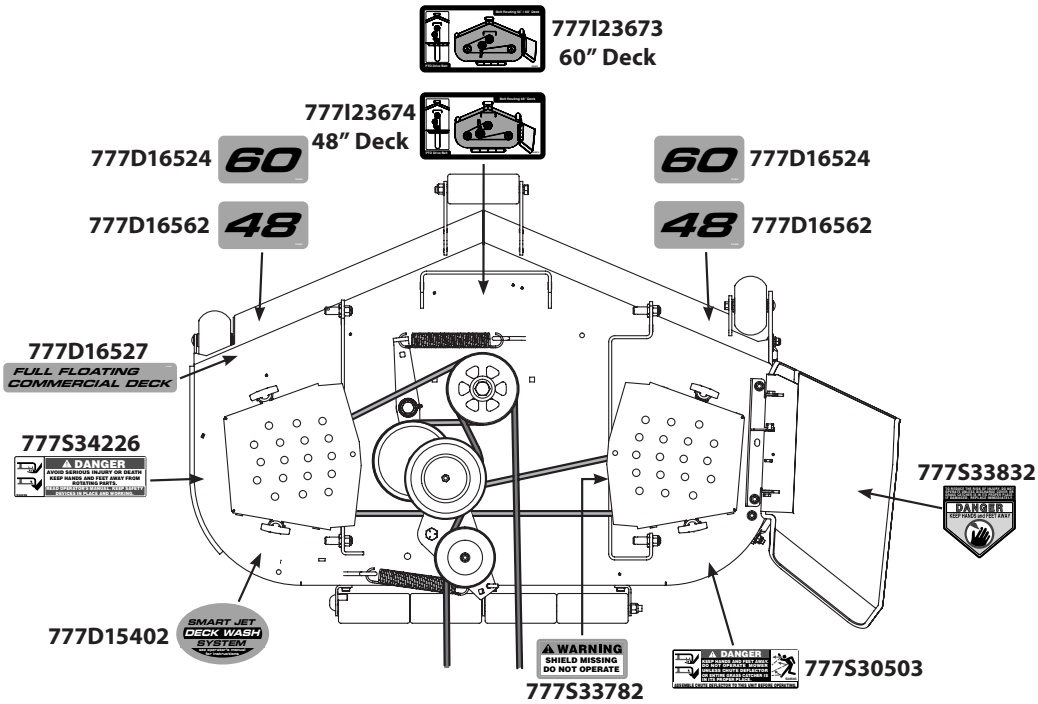

Kawasaki FX850V Cylinder/Crankcase

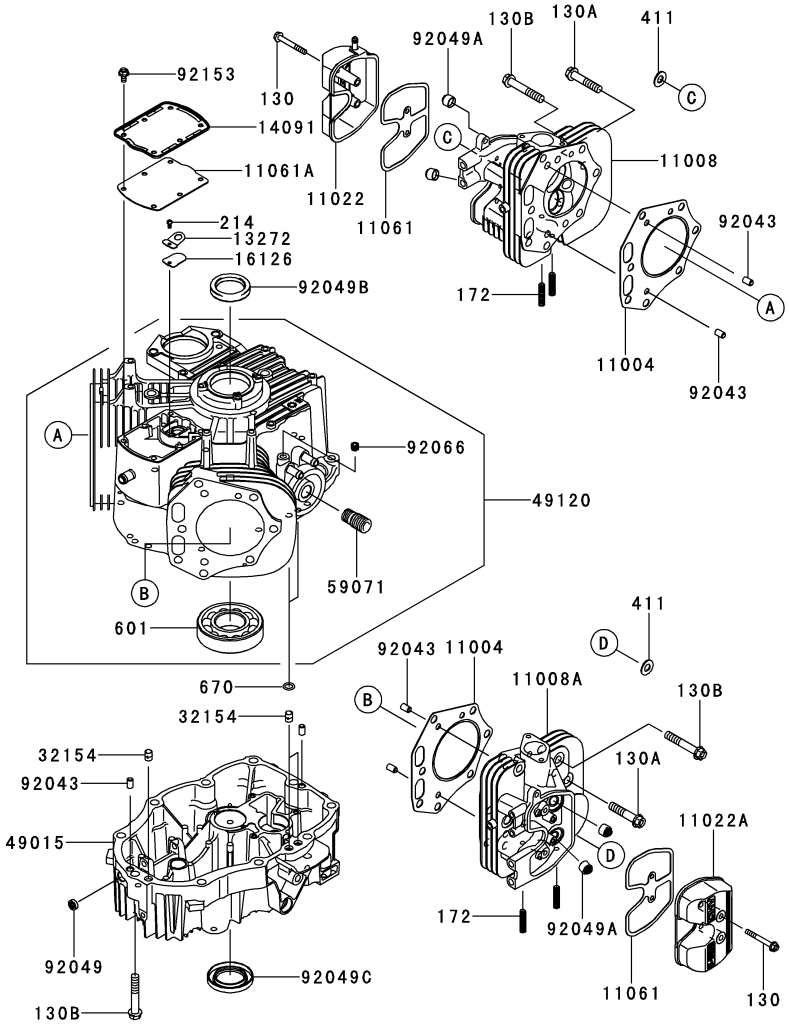

Ref.	Part Number	Description
11004	KM-11004-7025	Gasket-Head
11008	KM-11008-7036	Head-Comp-Cylinder
11008A	KM-11008-7037	Head-Comp-Cylinder
11022	KM-11022-6008	Case-Rocker
11022A	KM-11022-7025	Case Rocker
11061	KM-11061-7080	Gasket, Case Rocker
11061A	KM-11061-7081	Gasket, Breather
13272	KM-13272-7004	Plate, Breather
14091	KM-14091-7060	Cover, Breather
16126	KM-16126-7020	Valve, Breather
32154	KM-32154-7019	Pipe
49015	KM-49015-7088	Cover-Crankcase
49120	KM-49120-7117	Crankcase-Comp
59071	KM-59071-2079	Joint
92043	KM-92043-7024	Pin

Ref.	Part Number	Description
92049	KM-92049-7005	Seal-Oil,So 8x14x5 HS
92049A	KM-92049-7020	Seal, Oil, 7x15x13
92049B	KM-92049-7024	Seal-Oil,SD 40x54x9 R HS
92049C	KM-92049-7026	Seal-Oil,SD 40x62x8 L VS
92066	KM-92066-7026	Plug
92153	KM-92153-7043	Bolt, 6x12
130	KM-130BA0650	Bolt-Flanged, 6x50
130A	KM-130CA1050	Bolt-Flanged, 10x50
130B	KM-130CA1060	Bolt-Flanged, 10x60
172	KM-172BA0818	Bolt-Stud, 8x18
214	KM-214AA0408	Screw-Pan+-,4x8
411	KM-411AA1000	Washer, 10MM
601	KM-601A6308	Bearing-Ball
670	KM-670B2011	O Ring, 11MM

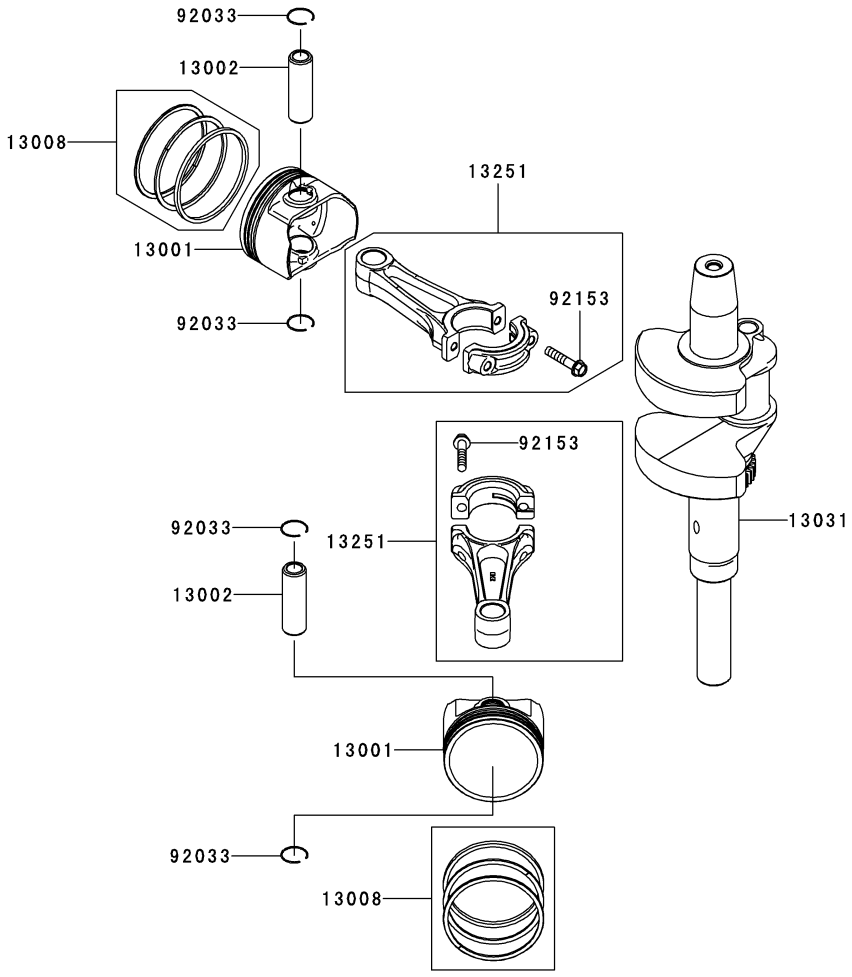

Ref.	Part Number	Description
13001	KM-13001-7025	Piston-Engine
13002	KM-13002-7005	Pin-Piston
13008	KM-13008-6069	Ring-Set-Piston
13031	KM-13031-7079	Crankshaft-Comp
13251	KM-13251-7031	Rod-Assy-Connecting
92033	KM-92033-7017	Ring-Snap
92153	KM-92153-2054	Bolt,7x35.2

Kawasaki FX850V Valve/Camshaft

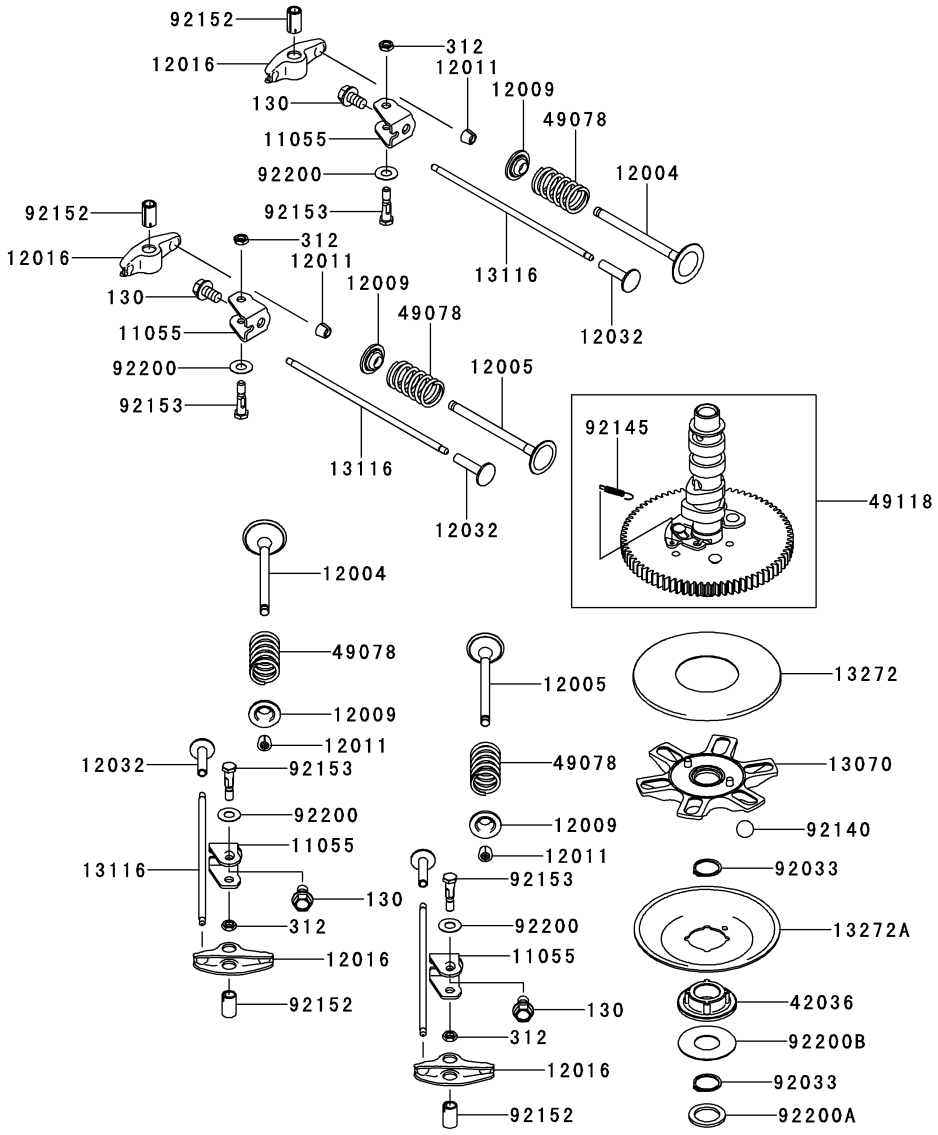

Ref.	Part Number	Description
11055	KM-11055-7009	Bracket
12004	KM-12004-7010	Vavle-Intake
12005	KM-12005-7011	Valve-Exhaust
12009	KM-12009-7004	Retainer-Valve Spring
12011	KM-12011-2052	Collet
12016	KM-12016-7016	Arm-Rocker
12032	KM-12032-7001	Tappet
13070	KM-13070-7016	Guide
13116	KM-13116-7006	Rod-Push
13272	KM-13272-7002	Plate
13272A	KM-13272-7003	Plate,Governor
42036	KM-42036-7019	Sleeve

Ref.	Part Number	Description
49078	KM-49078-7008	Spring-Engine Valve
49118	KM-49118-7026	Camshaft-Comp
92033	KM-92033-7012	Ring-Snap
92140	KM-92140-7005	Ball
92145	KM-92145-7001	Spring
92152	KM-92152-7020	Collar
92153	KM-92153-7100	Bolt, 6x29.5
92200	KM-92200-2151	Washer, 8.1x18x0.5
92200A	KM-92200-7044	Washer, 20.3x29x2.28
92200B	KM-92200-7045	Washer, 20x46x0.91
130	KM-130AA0814	Bolt-Flanged, 8x14
312	KM-312AA0600	Nut-Hex, 6MM

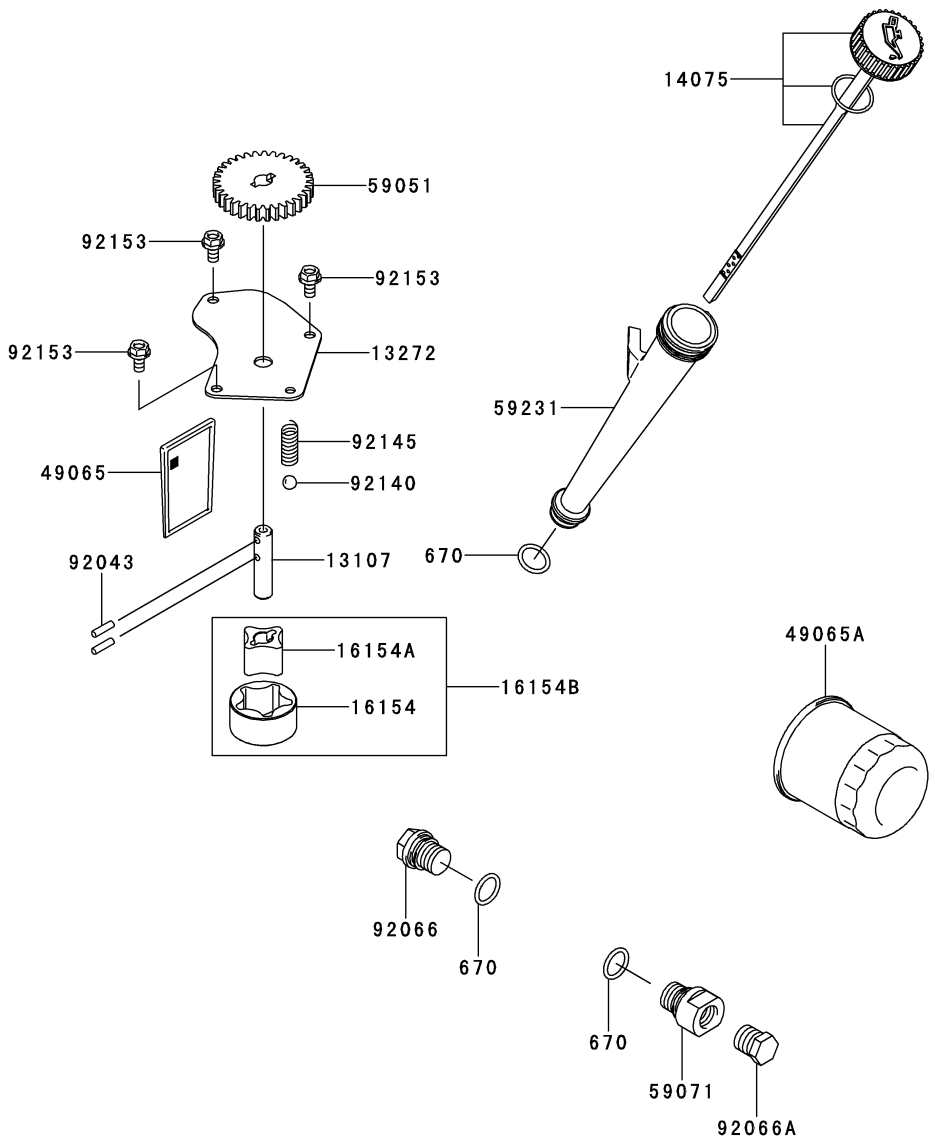

Ref.	Part Number	Description
13107	KM-13107-7009	Shaft
13272	KM-13272-7005	Plate
14075	KM-14075-7012	Cap-Assy
16154	KM-16154-1075	Rotor-Pump,Outer
16154A	KM-16154-1076	Rotor-Pump,Inner
16154B	KM-16154-1079	Rotor-Pump
49065	KM-49065-7004	Filter Oil
49065A	KM-49065-7010	Filter Oil
59051	KM-59051-7011	Gear-Spur

Ref.	Part Number	Description
59071	KM-59071-7023	Joint
59231	KM-59231-7014	Filler
92043	KM-92043-7003	Pin
92066	KM-92066-7003	Plug
92066A	KM-92066-7006	Plug
92140	KM-92140-7003	Ball
92145	KM-92145-7002	Spring
92153	KM-92153-7043	Bolt, 6x12
670	KM-670D2016	O-Ring, 16MM

Kawasaki FX850V Cooling Equipment

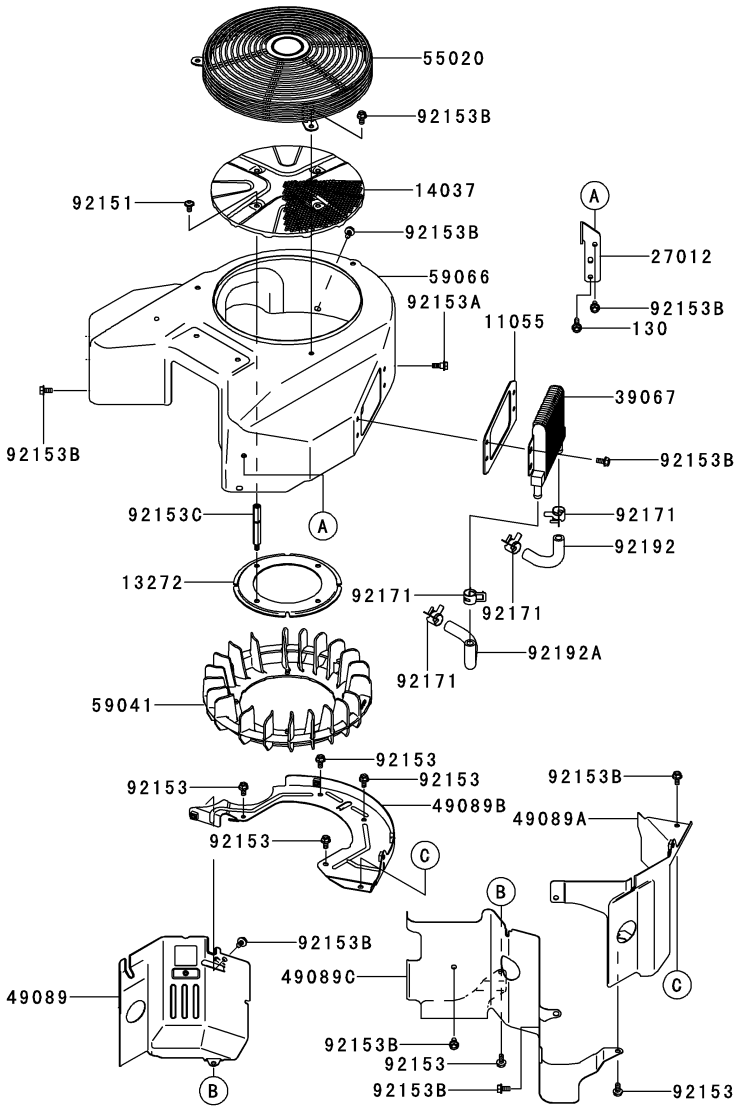

Ref.	Part Number	Description
11055	KM-11055-7005	Bracket
13272	KM-13272-7006	Plate, Fan
14037	KM-14037-70299H	Screen
27012	KM-27012-7009	Hook, Lift
39067	KM-39067-7007	Cooler-Oil
49089	KM-490897064753	Shroud-Engine
49089A	KM-490897065753	Shroud-Engine
49089B	KM-49089-7066	Shroud-Engine, Rear
49089C	KM-490897067753	Shroud-Engine, V-Bank
55020	KM-55020-70169H	Guard
59041	KM-59041-7019	Fan

Ref.	Part Number	Description
59066	KM-590667042753	Housing-Fan
92151	KM-92151-7012	Bolt, 6x12
92153	KM-92153-0010	Bolt
92153A	KM-92153-7007	Bolt
92153B	KM-92153-7043	Bolt, 6x12
92153C	KM-92153-7101	Bolt
92171	KM-92171-7015	Clamp
92192	KM-92192-7089	Tube
92192A	KM-92192-7090	Tube
130	KM-130AA0620	Bolt-Flanged, 6x20

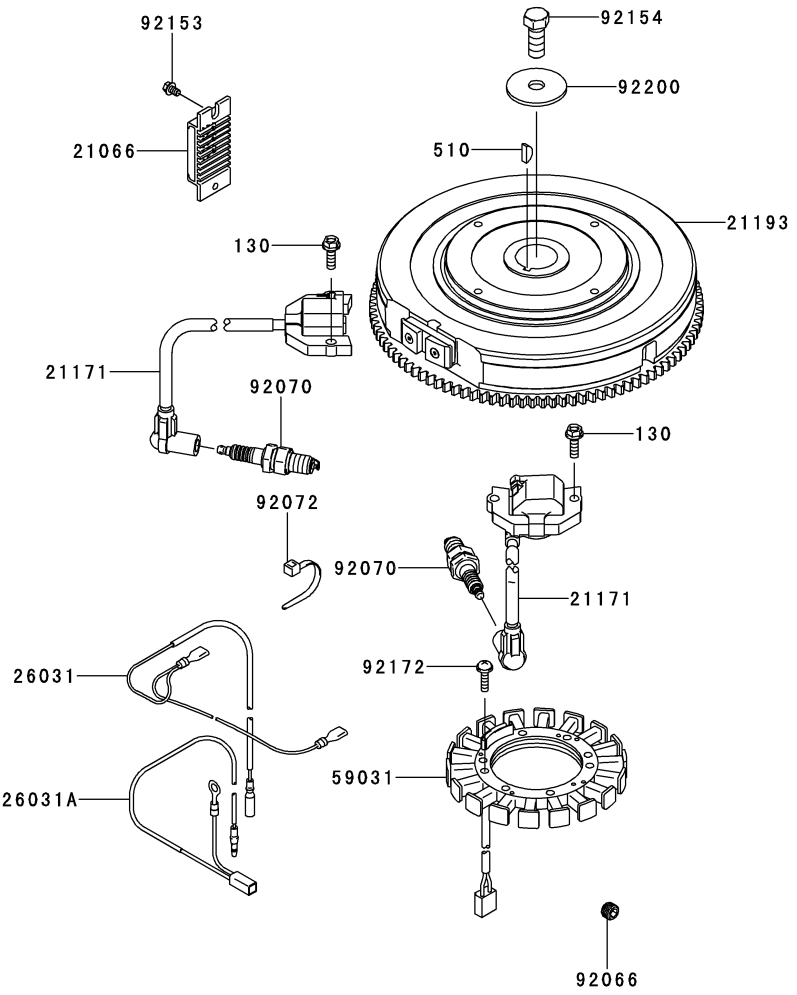

Ref.	Part Number	Description
21066	KM-21066-7011	Regulator-Voltage
21171	KM-21171-0711	Coil-Assy-Ignition
21193	KM-21193-7049	Flywheel-Assy
26031	KM-26031-7033	Harness
26031A	KM-26031-7034	Harness
59031	KM-59031-7015	Coil-Charging
92066	KM-92066-7026	Plug
92070	KM-BPR4ES	Plug-Spark,RCJ8Y,Solid

Ref.	Part Number	Description
92072	KM-92072-7003	Band
92153	KM-92153-7029	Bolt
92154	KM-92154-7003	Bolt, 12x30
92172	KM-92172-7018	Screw, 5x20
92200	KM-92200-7040	Washer, 12.2x46x3
130	KM-130AA0620	Bolt-Flanged, 6x20
510	KM-510A5100	Key-Woodruff

Kawasaki FX850V Carburetor

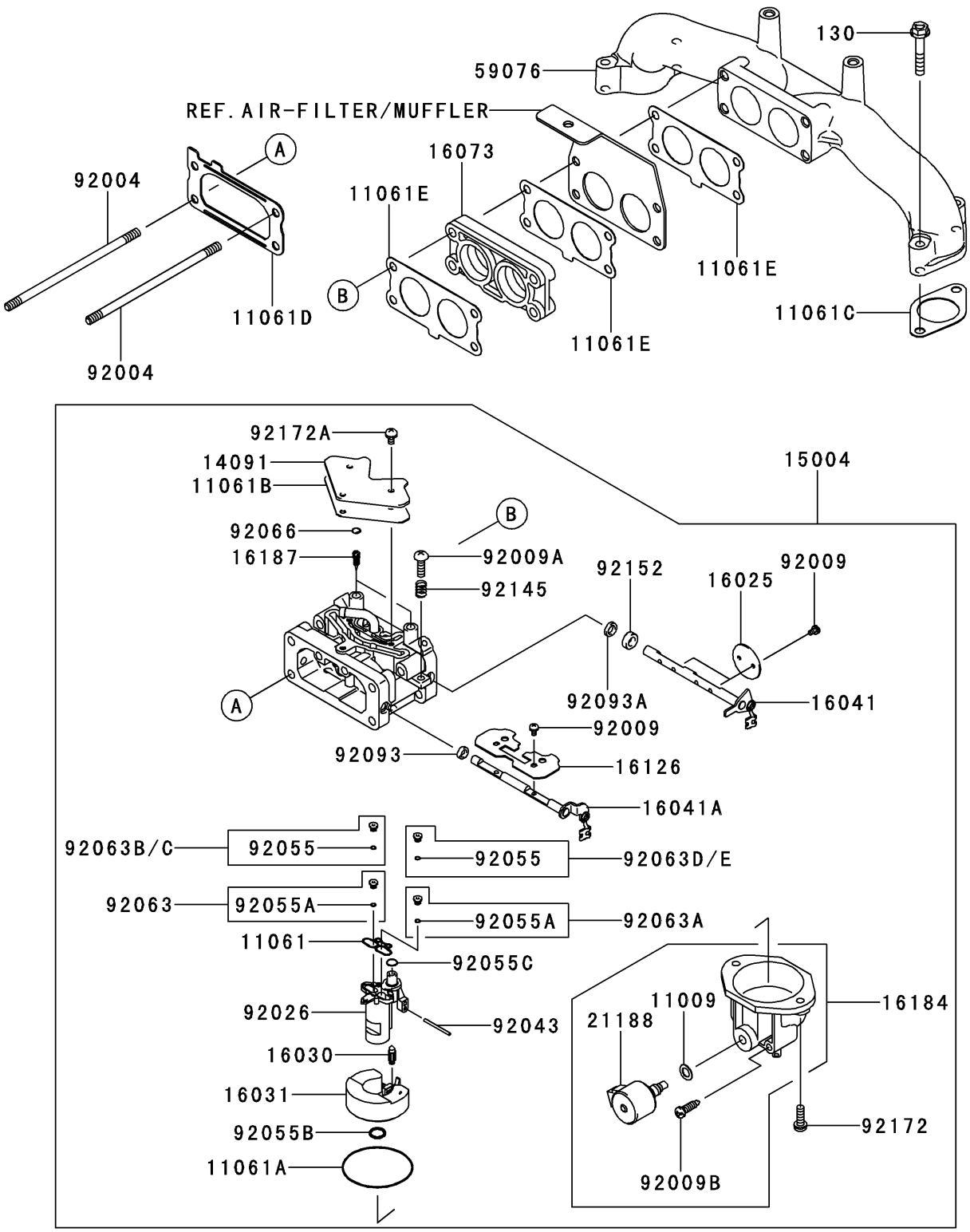

Ref.	Part Number	Description
11009	KM-11009-2056	Gasket
11061	KM-11061-7037	Gasket
11061A	KM-11061-7038	Gasket
11061B	KM-11061-7039	Gasket
11061C	KM-11061-7070	Gasket, Head/Manifold
11061D	KM-11061-7091	Gasket, Carburetor/Pipe
11061E	KM-11061-7092	Gasket, Carburetor/Manifold
14091	KM-14091-7031	Cover
15004	KM-15004-7043	Carburetor - Assy
16025	KM-16025-7010	Valve-Throttle
16030	KM-16030-7004	Valve-Float
16031	KM-16031-7003	Float
16041	KM-16041-7025	Shaft-Carburetor
16041A	KM-16041-7039	Shaft-Carburetor
16073	KM-16073-7011	Insulator
16126	KM-16126-7021	Valve
16184	KM-16184-7023	Chamber - Assy - Float
16187	KM-16187-7005	Needle-Jet
21188	KM-21188-7003	Solenoid
59076	KM-59076-7013	Manifold-Intake
92004	KM-92004-7028	Stud, 6x120
92009	KM-92009-7003	Screw
92009A	KM-92009-7004	Screw

Ref.	Part Number	Description
92009B	KM-92009-7006	Screw, Drain
92026	KM-92026-7024	Spacer
92043	KM-92043-7014	Pin
92055	KM-92055-7013	Ring-O
92055A	KM-92055-7013	Ring-O
92055B	KM-92055-7016	Ring-O
92055C	KM-92055-7024	Ring-O
92063	KM-92063-7110	Jet-Main,#118
92063A	KM-92063-7111	Jet-Main, #120
92063B	KM-92063-7135	Jet-Main, #115
92063C	KM-92063-7136	Jet-Main, #112
92063D	KM-92063-7137	Jet-Main, #117
92063E	KM-92063-7138	Jet-Main, #114
92066	KM-92066-7009	Plug, Expansion
92093	KM-92093-7001	Seal
92093A	KM-92093-7002	Seal
92145	KM-92145-7010	Spring
92145A	KM-92145-7011	Spring
92152	KM-92152-7005	Collar
92172	KM-92172-7005	Screw
92172A	KM-92172-7006	Screw
130	KM-130AA0635	Bolt-Flanged, 6x35

Kawasaki FX850V Control Equipment

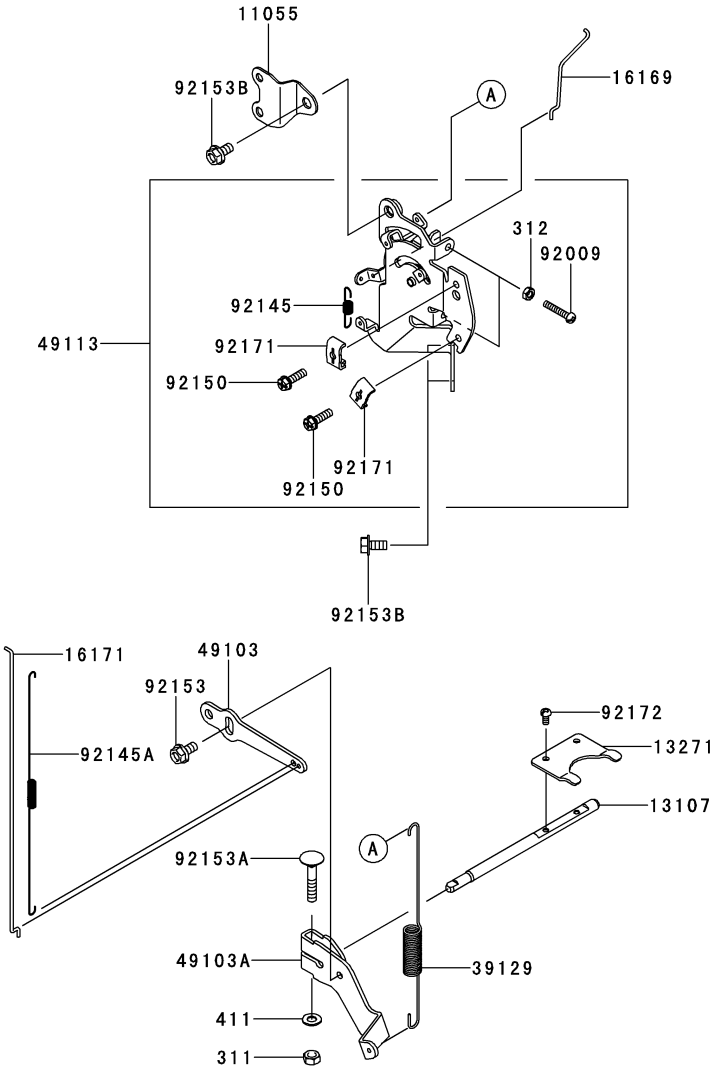

Ref.	Part Number	Description
11055	KM-11055-7001	Bracket
13107	KM-13107-7047	Shaft, Governor
13271	KM-13271-7038	Plate
16169	KM-16169-7020	Link-Choke
16171	KM-16171-7020	Link
39129	KM-39129-7020	Spring-Governor
49103	KM-49103-7012	Arm-Governor
49103A	KM-49103-7018	Arm-Governor
49113	KM-49113-7060	Panel-Comp-Control
92009	KM-92009-2381	Screw,5x30
92145	KM-92145-7044	Spring

Ref.	Part Number	Description
92145A	KM-92145-7055	Spring
92150	KM-92150-2182	Bolt,5x18
92153	KM-92153-0009	Bolt,6x12
92153A	KM-92153-7033	Bolt,6x35
92153B	KM-92153-7043	Bolt,6x12
92171	KM-92171-7018	Clamp
92172	KM-92172-7033	Screw, 4x8
311	KM-311AA0600	Nut-Hex, 6MM
312	KM-312AA0500	Nut-Hex, 5MM
411	KM-411AA0600	Washer-Plain

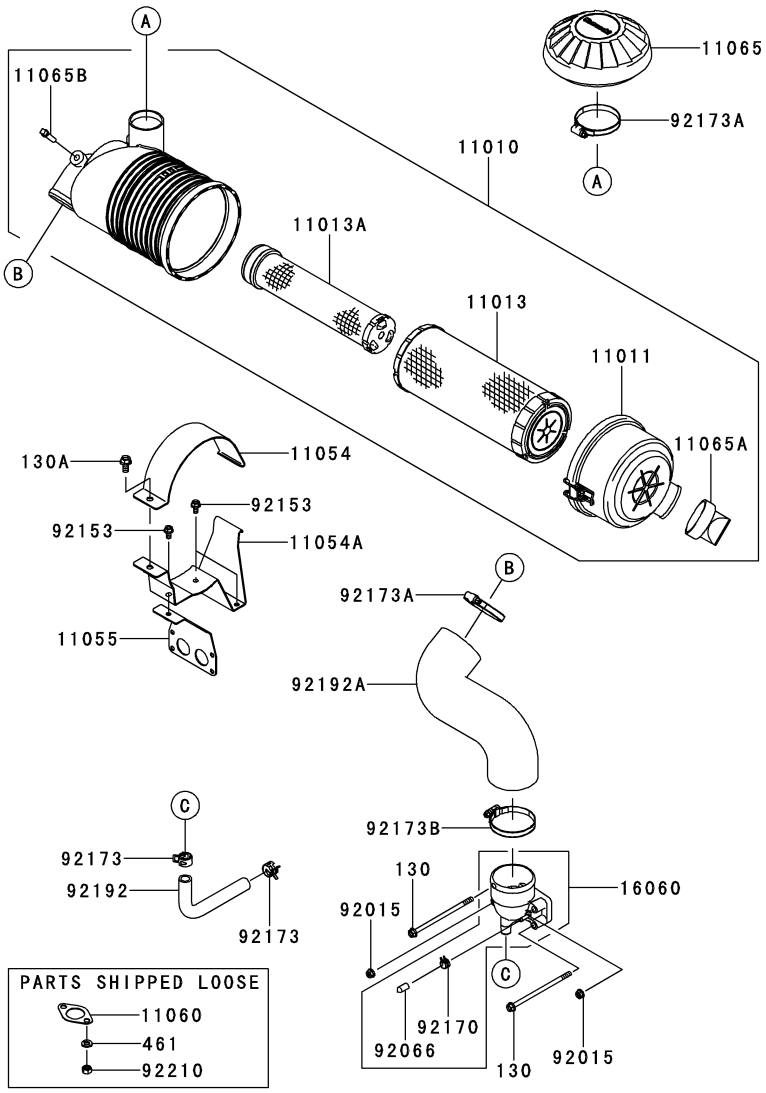

Ref.	Part Number	Description
11010	KM-11010-7028	Filter-Assy-Air
11011	KM-11011-7056	Case-Air Filter
11013	KM-11013-7044	Element-Air Filter
11013A	KM-11013-7045	Element-Air Filter
11054	KM-11054-70139X	Bracket
11054A	KM-11054-70169X	Bracket
11055	KM-11055-70079X	Bracket
11060	KM-11060-7016	Gasket-Muffler
11065	KM-11065-7025	Cap
11065A	KM-11065-7031	Cap
11065B	KM-11065-7032	Cap
16060	KM-16060-0723	Pipe-Intake
92015	KM-92015-1367	Nut

Ref.	Part Number	Description
92066	KM-92066-0095	Plug
92153	KM-92153-7043	Bolt, 6x12
92170	KM-92170-2042	Clamp
92173	KM-92173-7003	Clamp
92173A	KM-92173-7007	Clamp
92173B	KM-92173-7011	Clamp
92192	KM-92192-7086	Tube
92192A	KM-92192-7166	Tube
92210	KM-92210-7027	Nut, M8
130	KM-130AA06120	Bolt, Flanged, 6x120
130A	KM-130AA0816	Bolt, Flanged, 8x16
461	KM-461DA0800	Washer-Spring, 8MM

Kawasaki FX850V Fuel Tank/Valve

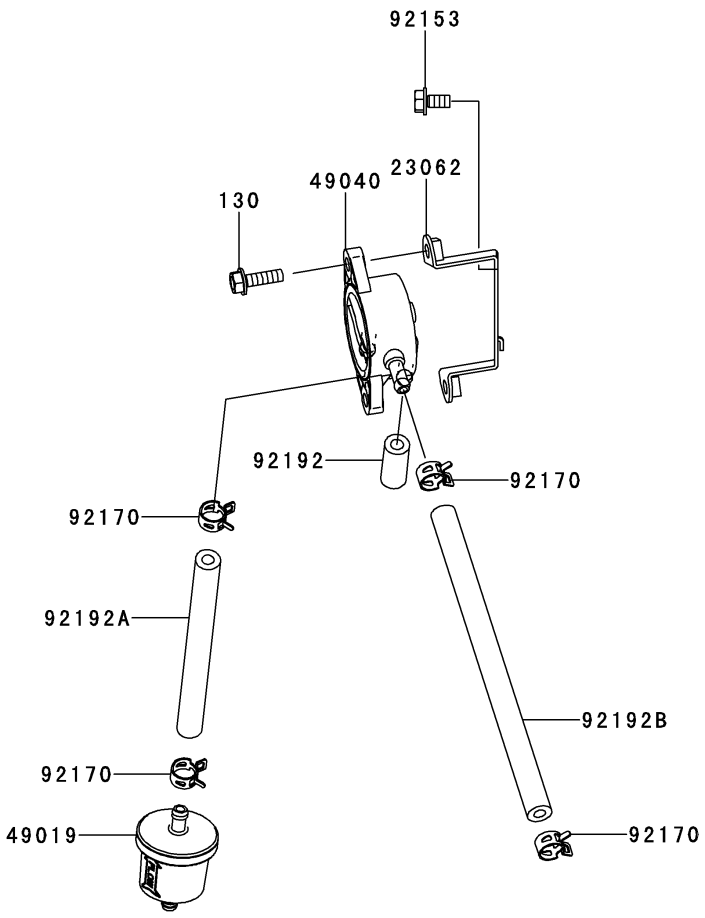

Ref.	Part Number	Description
23062	KM-23062-7018	Bracket-Comp
49019	KM-49019-7005	Filter-Fuel
49040	KM-49040-7001	Pump-Fuel
92153	KM-92153-7043	Bolt, 6x12
92170	KM-92170-2009	Clamp
92192	KM-92192-7088	Tube, 6.4 x 12.7x28.5
92192A	KM-92192-7169	Tube, 6.35x12.7x140
92192B	KM-92192-7173	Tube, 6.35x12.7x195
130	KM-130AA0620	Bolt-Flanged, 6x20

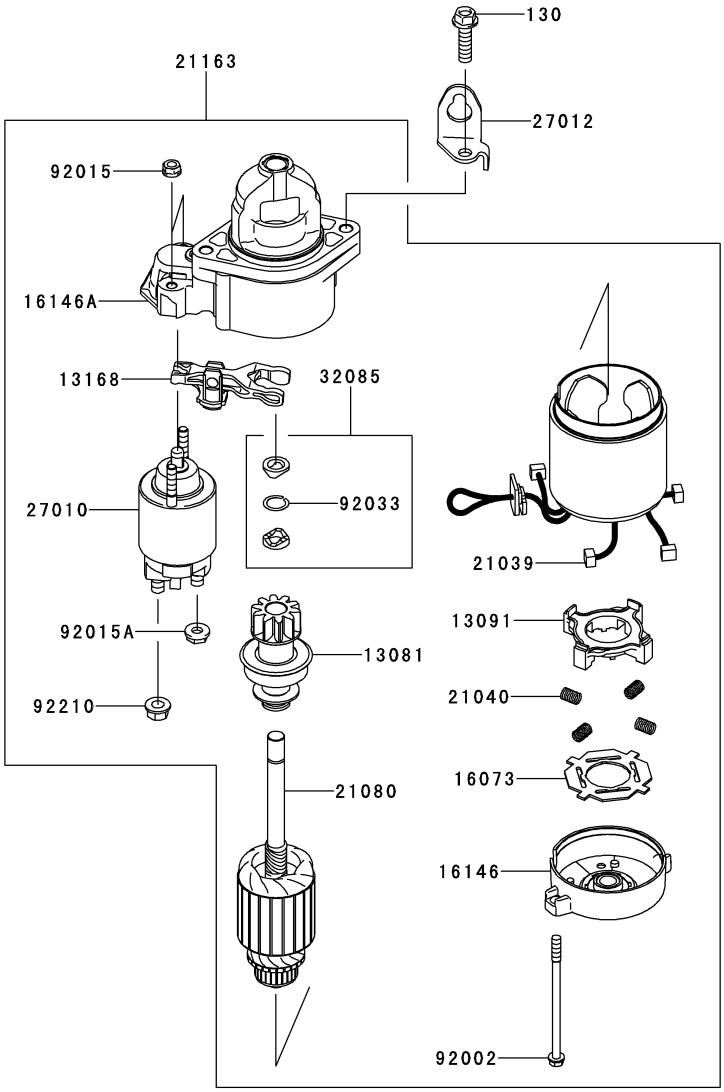

Ref.	Part Number	Description
13081	KM-13081-7001	Clutch-Assy
13091	KM-13091-2068	Holder, Brush
13168	KM-13168-2148	Lever, Shift
16073	KM-16073-2098	Insulator
16146	KM-16146-2077	Coaver-Assy
16146A	KM-16146-7029	Cover-Assy
21039	KM-21039-2059	Brush
21040	KM-21040-2052	Spring-Brush
21080	KM-21080-2058	Armature
21163	KM-21163-7025	Starter-Electric

Ref.	Part Number	Description
27010	KM-27010-7005	Switch
27012	KM-27012-7005	Hook, Lift
32085	KM-32085-2097	Stopper
92002	KM-92002-2277	Bolt
92015	KM-92015-2146	Nut
92015A	KM-92015-2147	Nut
92033	KM-92033-2081	Ring-Snap
92210	KM-92210-2085	Nut
130	KM-130AA0830	Bolt-Flanged, 8x30

Kawasaki FX850V Labels

56014



56033



56070



Ref.	Part Number	Description
56014	KM-56014-7003	Emblem
56033	KM-56033-7001	Label-Manual
56070	KM-56070-7001	Label-Warning

Kohler CV680-3042 Crankshaft

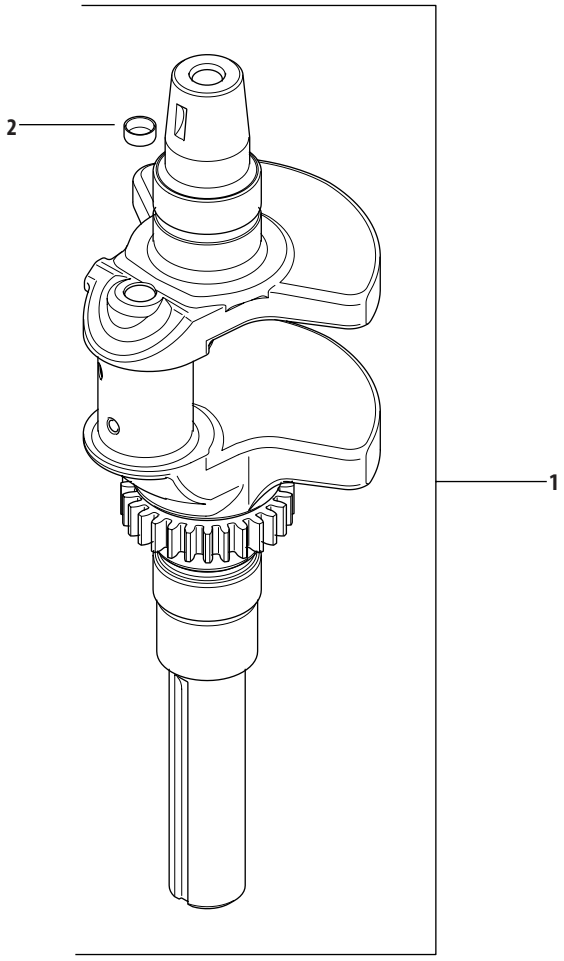

Ref.	Part-Number	Description
1	KH-24-014-345-S	Crankshaft (Inc. 2)
2	KH-52-139-09-S	Plug-Cup

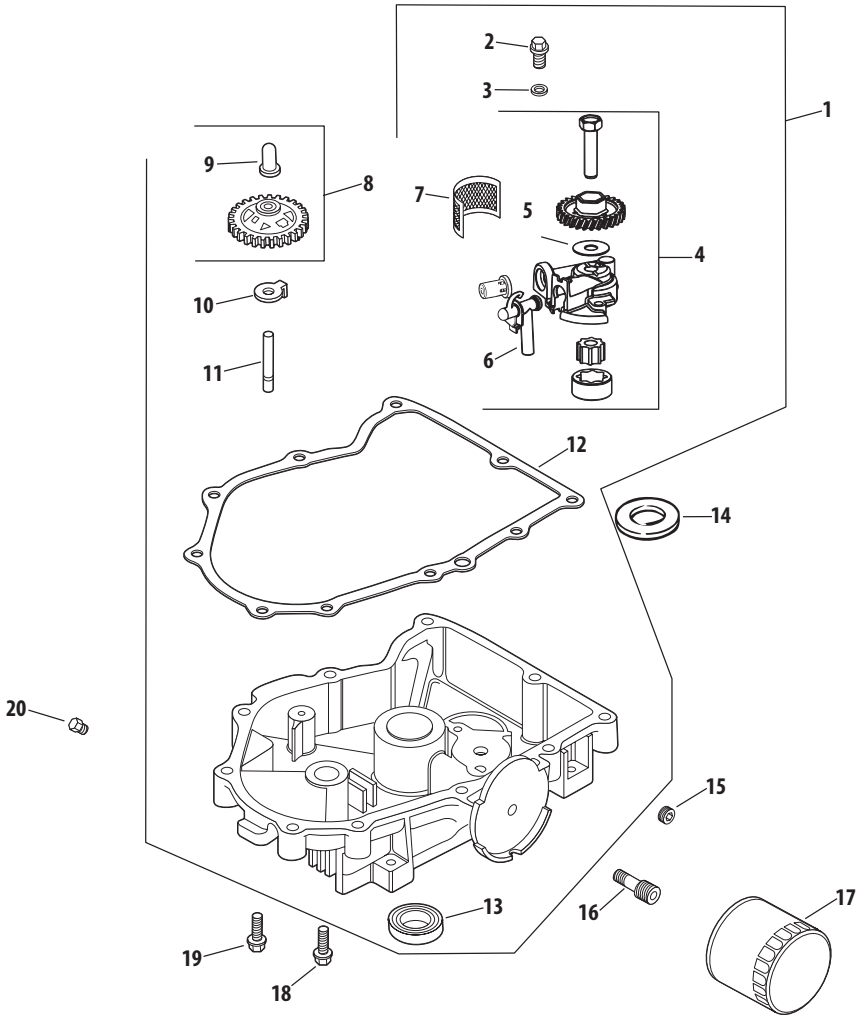

Ref.	Part-Number	Description
1	KH-24-199-21-S	Oil Pan Assembly Kit (Inc. 2-10)
2	KH-M-645025-S	Screw
3	KH-M-631005	Washer
4	KH-24-393-53-S	Oil Pump Assembly Kit (Inc. 5 & 6)
5	KH-24-153-01	O-Ring
6	KH-24-381-11-S	Oil Pick-Up Tube (CV)
7	KH-24-162-26-S	Oil Screen
8	KH-24-043-12	Governor Gear Kit w/ Pin (Inc. 9)
9	KH-12-380-01	Pin
10	KH-24-448-01-S	Locking Tab

Ref.	Part-Number	Description
11	KH-12-144-02	Shaft
12	KH-24-041-54-S	Oil Pan Gasket
13	KH-52-032-06-S	Seal
14	KH-24-422-03-S	Thrust Shim (Not Shown)
15	KH-25-139-62-S	Pipe Plug
16	KH-24-136-01	Oil Filter Nipple
17	KH-12-050-01-S	Oil Filter
18	KH-24-086-17-S	Hex Flange Screw
19	KH-24-086-17-S	Hex Flange Screw
20	KH-52-139-02	Plug

Kohler CV680-3042 Crankcase

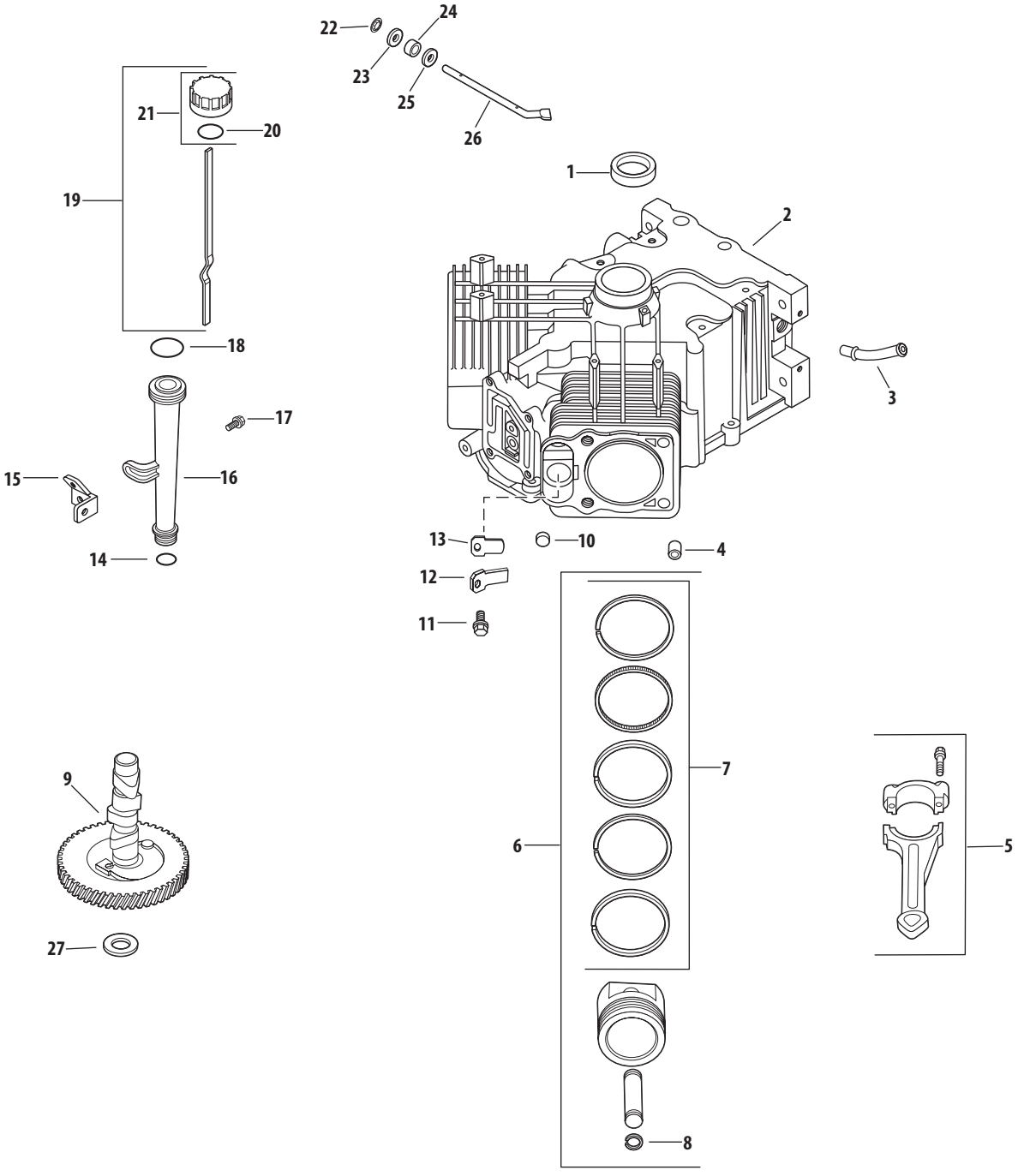

Ref.	Part-Number	Description
1	KH-24-032-19-S	Oil Seal
2	N/A	Crankcase
3	KH-24-294-13	Fitting
4	KH-24-380-16-S	Locating Pin
5	KH-24-067-28-S	Connecting Rod Assembly
—	KH-24-067-29-S	Connecting Rod Assembly
6	KH-24-874-42-S	Piston Kit w/ Ring Set (Standard)
—	KH-24-874-43-S	Piston Kit w/ Ring Set (.08)
—	KH-24-874-44-S	Piston Kit w/ Ring Set (.25)
—	KH-24-874-45-S	Piston Kit w/Ring Set (.5)
7	KH-24-108-18-S	Piston Ring Set (Standard)
8	KH-24-018-01-S	Piston Pin Retainer
9	KH-24-012-10-S	Camshaft Kit
10	KH-52-139-09-S	Cup Plug
11	KH-M-0545010	Flange Screw, M5 x .8 X 10
12	KH-24-018-04-S	Breather Reed Retainer
13	KH-24-402-05-S	Breather Reed
14	KH-12-153-01-S	Lower Oil Fill Tube O-Ring
15	KH-24-126-19	Oil Fill Tube Bracket
16	KH-32-755-04-S	Tube Assembly
17	KH-M-545016-S	Flange Screw, M5 x 0.8 x 16
18	KH-12-153-02-S	Upper Oil Fill Tube O-Ring
19	KH-24-038-04-S	Dipstick Assembly
20	KH-25-153-02-S	Dipstick O-Ring
21	KH-24-755-46	Oil Fill Cap Kit (Yellow)
22	KH-24-018-09-S	Retainer Ring
23	KH-M-931010-S	Flat Washer, 9 mm
24	KH-28-032-09-S	Governor Cross Shaft Seal
25	KH-24-468-15-S	Flat Washer, 11/32
26	KH-24-144-38-S	Governor Cross Shaft
27	KH-12-422-07-S	Camshaft Shim (White .028)

Kohler CV680-3042 Head/Valve/Breather

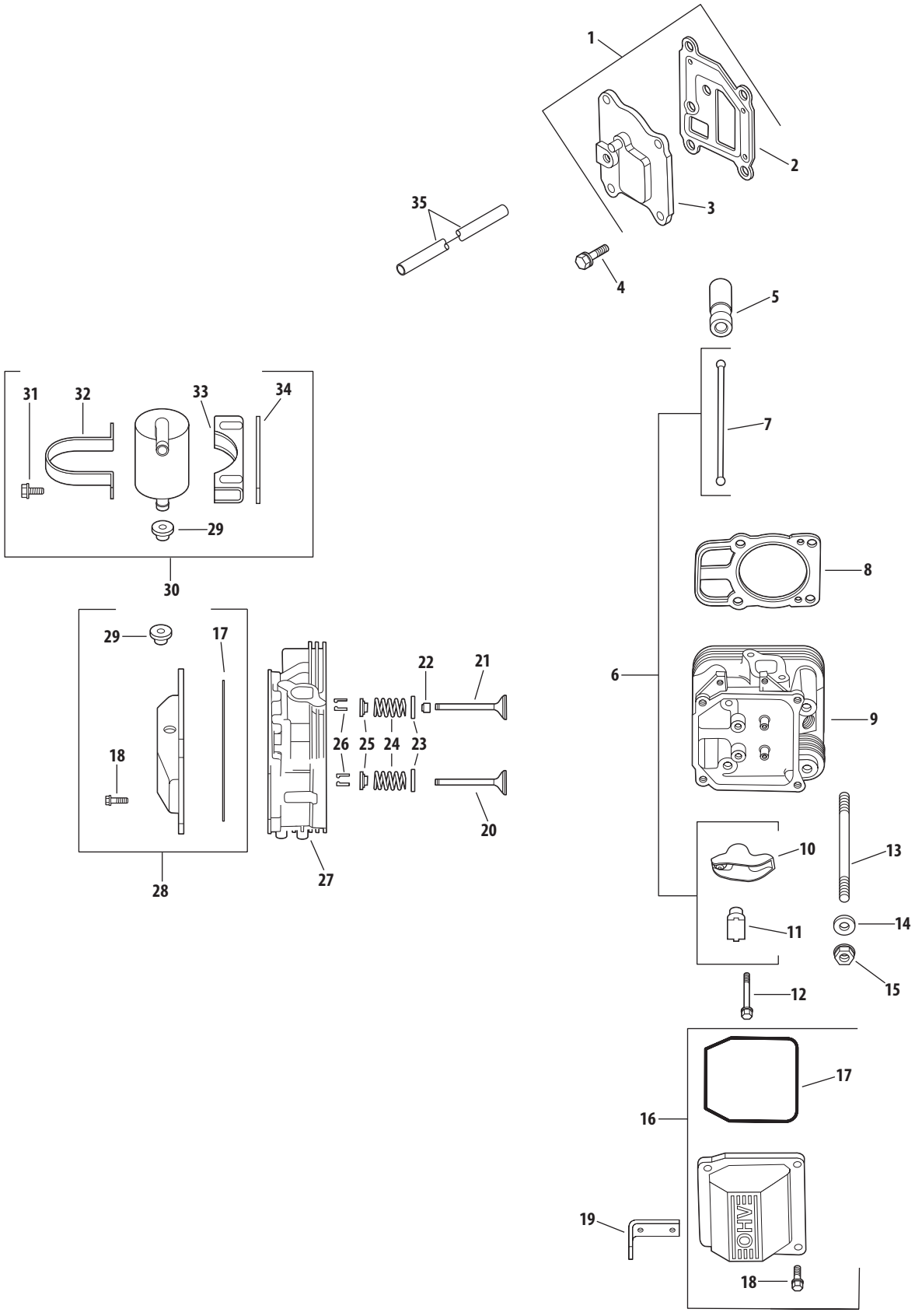

Kohler CV680-3042 Head/Valve/Breather

Ref.	Part-Number	Description
1	KH-24-033-03	Breather Cover Kit w/ Gasket (Inc. 2, 3 & KH25-139-60-S)
2	KH-24-041-67-S	Gasket
3	KH-24-096-125-S	Breather Cover Kit
4	KH-M-645020-S	Flange Screw, M6 x 1.0 x 20
5	KH-25-351-10-S	Lifter (Inc. KH-25-357-14-S)
6	KH-24-755-66	Valve Train Kit (Inc. 7, 17 & 18)
7	KH-24-411-05	Rod Push
8	KH-24-841-02-S	Gasket Cylinder Head Gasekt (Inc. Mounting Hardware)
9	KH-24-318-113-S	Cylinder Head Assembly (Inc. KH-25-072-04-S)
10	KH-25-186-01	Arm Rocker
11	KH-24-599-02-S	Pivot Rocker Arm
12	KH-M-640034-S	Flange Screw, M6 x 1.0 x 34
13	KH-24-072-09-S	Stud, M8 x 1.25
14	KH-24-468-16-S	Flat Washer, 8.6 mm
15	KH-24-100-10-S	Flange Nut, M8 x 1.25
16	KH-24-755-141-S	Valve Cover Kit (Plain) (Inc. 17 & 18)
17	KH-24-153-30-S	Valve Cover O-Ring
18	KH-M-651030-S	Flange Screw, M6 x 1.0 x 30
19	KH-25-445-03-S	Lifting Strap
20	KH-24-016-01	Valve Exhaust (Standard)
—	KH-24-016-02	Valve Exhaust (.25)
21	KH-24-017-01	Valve Intake (Standard)
—	KH-24-017-02	Valve Intake (.25)

Ref.	Part-Number	Description
22	KH-66-032-05-S	Valve Stem Seal
23	KH-235011-S	Retainer Spring
24	KH-24-089-02	Spring Valve
25	KH-25-173-28-S	Spring Cap Valve
26	KH-12-755-03	Retainer Kit
27	KH-24-318-105-S	Cylinder Head Assembly (Inc. KH-25-072-04-S)
28	KH-24-755-142-S	Valve Cover Kit (Inc. 17, 18 & 29)
29	KH-25-313-03-S	Rubber Grommet
30	KH-24-755-57-S	Breather Separator Kit (Inc. 29 & 31-34)
31	KH-M-545016-S	Flange Screw, M5 x 0.8 x 16
32	KH-24-445-02	Breather Strap
33	KH-24-126-44	Breather Separator Bracket
34	KH-24-112-12	Spacer
35	KH-24-326-63-S	Breather Hose
—	KH-M-545020-S	Flange Screw, M5 x .8 X 20 (Not Shown)
—	KH-24-755-147-S	Cylinder Head Hardware Kit (Not Shown) (Inc. 7, 10-12 & 20-26)
—	KH-25-139-60-S	Countersink Pipe Plug, ⅛ (Not Shown)
—	KH-25-357-14-S	Camshaft Lubricant (Not Shown)
—	KH-25-072-24-S	Stud (Not Shown)

Kohler CV680-3042 Blower Housing & Baffles

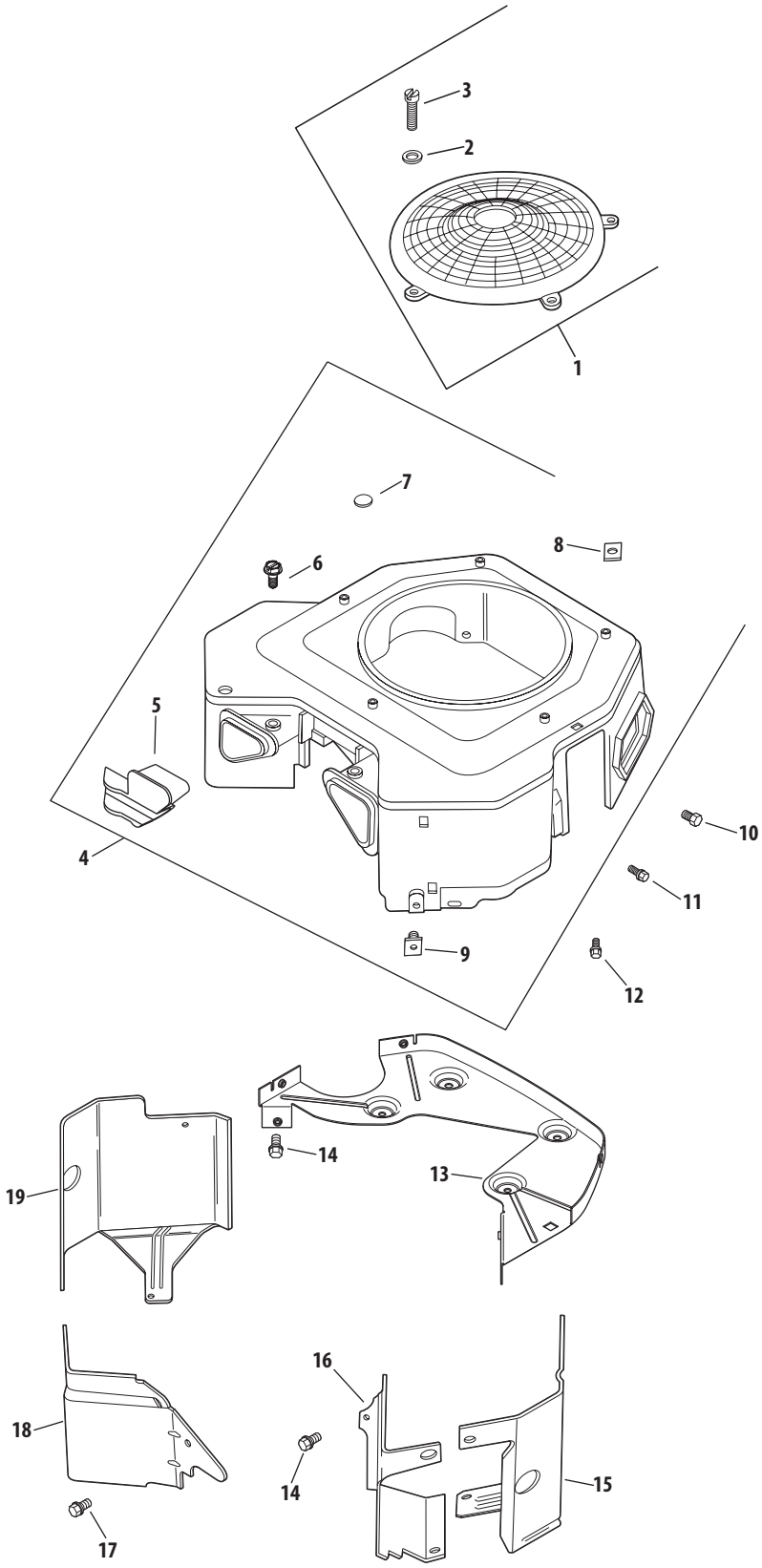

Kohler CV680-3042 Blower Housing & Baffles

Ref.	Part-Number	Description
1	KH-24-755-81-S	Fixed Guard Kit (Inc. 2, 3, 24, KH-24-113-18-S & KH-24-332-01-S)
2	KH-24-468-10	Flat Washer, 7⁄32
3	KH-24-086-35-S	Pan Screw, M5 x 0.8 x 10
4	KH-24-027-197-S	Blower Housing Kit (Inc. 5-9 & KH-24-332-01-S)
5	KH-24-096-119-S	Blower Housing Cover
6	KH-25-086-91-S	Washer Screw, #8-18 X ½
7	KH-25-139-16	Button Plug, 9⁄16
8	KH-24-100-02-S	Plastic Nut
9	KH-25-100-37-S	Plastic Nut
10	KH-M-545016-S	Thread Forming Void Screw
11	KH-M-545016-S	Flange Screw, M5 x 0.8 x 16
12	KH-M-545020-S	Flange Screw, M5x.8X20
13	KH-24-146-59-S	Backing Plate
14	KH-M-645016-S	Flange Screw, M6 x 1.0 x 16
15	KH-24-063-88-S	Baffle
16	KH-24-063-94-S	Valley Baffle, #2
17	KH-M-0545010	Flange Screw, M5 x .8 X 10
18	KH-24-063-93-S	Valley Baffle, #1
19	KH-24-063-85-S	Baffle
—	KH-25-154-11-S	Repair Clip (Speed Nut) (Not Shown)
—	KH-24-332-01-S	Threaded Inserted (Not Shown)
—	KH-41-037-10-S	Service Nameplate (Not Shown)

Kohler CV680-3042 Ignition/Electrical

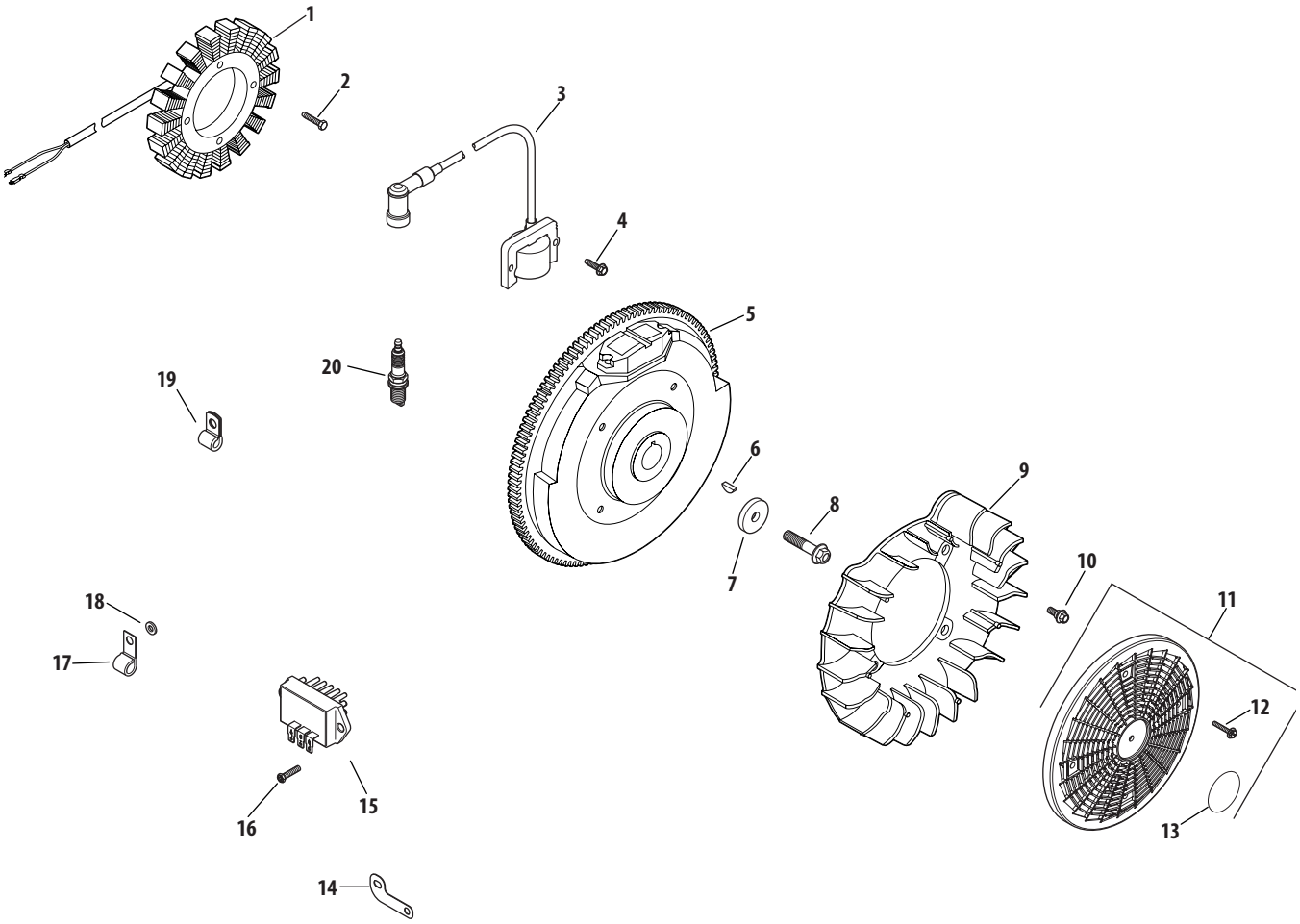

Ref.	Part-Number	Description
1	KH-237878	15/20 Amp Stator Kit
2	KH-M-548025-S	Screw, M5 x 0.8 x 25
3	KH-24-584-45-S	Ignition Module Kit (CDI Fixed)
4	KH-M-545020-S	Flange Screw, M5 x .8 X 20
5	KH-24-025-55-S	Flywheel
6	KH-X-42-15	Key, 3⁄16 X 5⁄8
7	KH-12-468-03	Flat Washer, 13⁄32
8	KH-25-086-361-S	Flange Screw, M10 x 1.5 x 45
9	KH-24-157-12-S	Fan
10	KH-25-086-47	Shoulder Bolt
11	KH-54-755-15	Grass Screen Kit
12	KH-25-086-117-S	Flange Screw, M4 x .7 X 25

Ref.	Part-Number	Description
13	KH-24-113-18-S	Grass Screen Decal
14	KH-24-126-137-S	Ground Strap Bracket
15	KH-25-403-21-S	Rectifier Regulator
16	KH-25-086-157-S	Hex Flange Screw
17	KH-235173	Cable Clip
18	KH-X-25-63	Flat Washer, ¼ x ½
19	KH-210281-S	Clip
20	759-3336	Spark Plug (Standard)
—	KH-24-176-150-S	Wiring Harness (Not Shown)
—	KH-24-176-41	Duplex Lead (Not Shown)
—	KH-25-454-07-S	Tie (Not Shown)
—	KH-25-518-34-S	20/25 Amp Lead B+ (Not Shown)

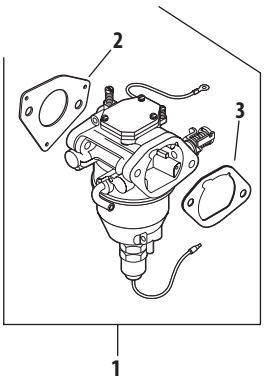

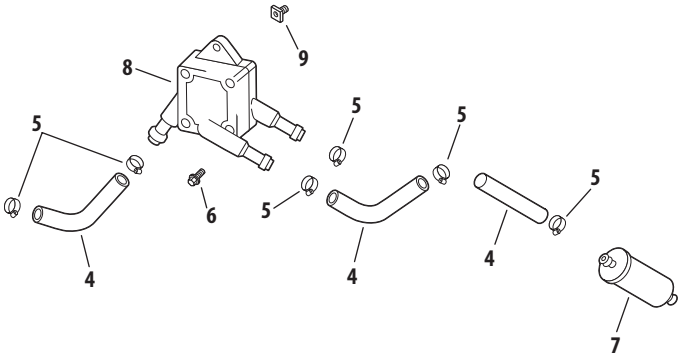

Ref.	Part-Number	Description
1	KH-24-853-168-S	Kit Carburetor (Inc. 2, 3 & KH-25-153-05-S)
2	KH-24-041-15	Carburetor Gasket
3	KH-24-041-14	Air Cleaner Base Gasket
4	KH-25-111-72-S	Fuel Line, 24"
5	KH-25-237-31-S	Hose Clamp, ½
6	KH-24-086-12	Tap Screw, M6 x 1.7 x 18
7	KH-24-050-13-S	Fuel Filter
8	KH-24-393-16	Fuel Pump
9	KH-25-100-37-S	Plastic Nut (Black)
—	KH-24-431-02-S	Insulating Sleeve 6.0 x 0.5 (Not Shown)

Kohler CV680-3042 Starting System

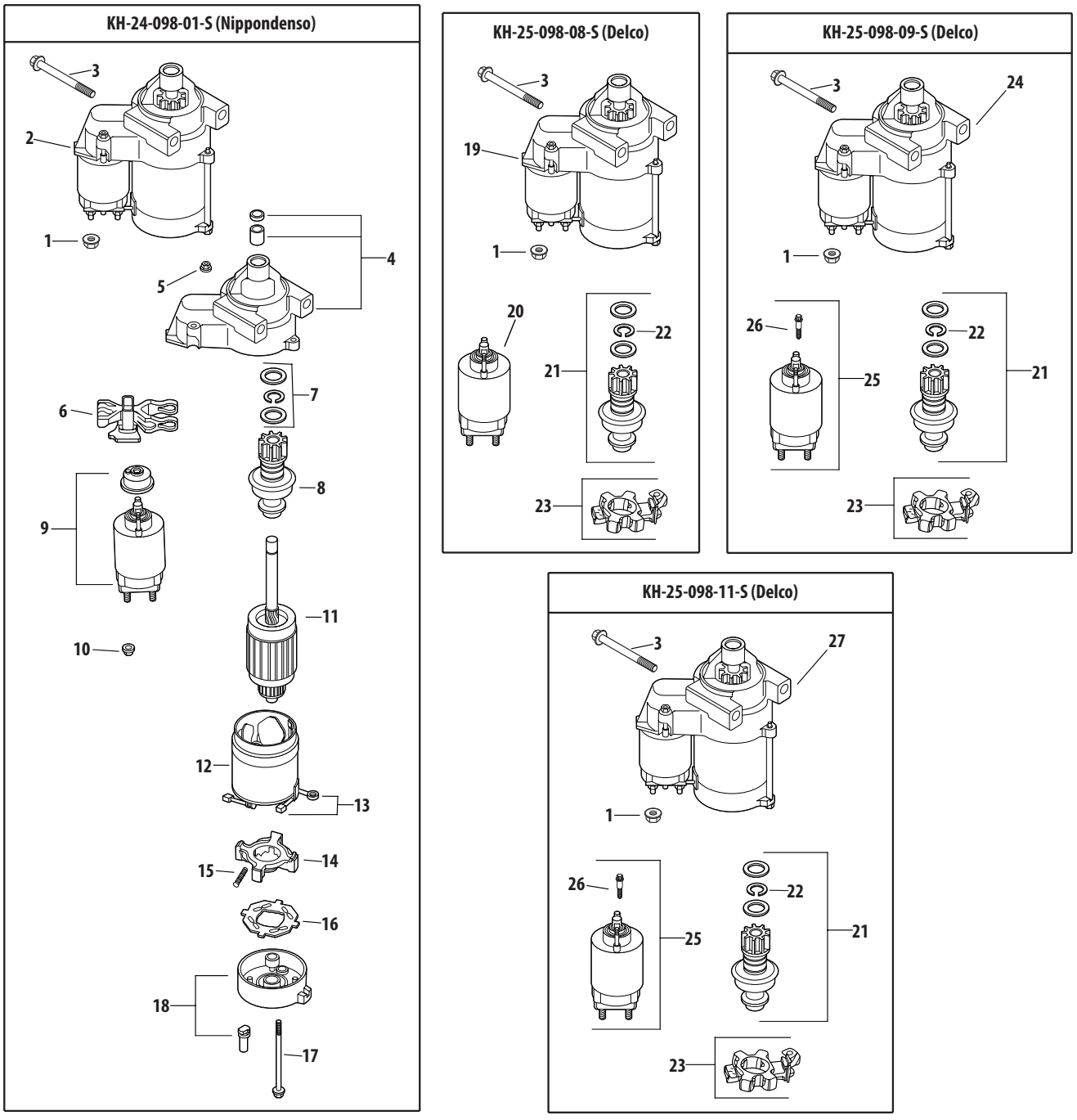

Ref.	Part-Number	Description
1	712-3086	Flange Nut, M8 x 1.25
2	KH-25-098-11-S	Starter
3	KH-M-851080-S	Screw
4	KH-24-081-04	Drive End Cap
5	KH-52-100-09	Nut
6	KH-12-090-10	Drive Lever
7	KH-24-755-84	Starter Repair Kit
8	KH-12-239-01	Drive Pinion
9	KH-52-435-02	Solenoid
10	KH-52-100-10	Nut
11	KH-12-170-04	Armature
12	KH-12-471-01	Frame w/ Brushes (Discontinued)
13	KH-52-323-03	Brush Holder
14	KH-52-221-01	Brush & Spring Kit
15	KH-52-089-09	Brush Spring
16	KH-52-168-01	Insulator
17	KH-52-211-05	Thru Bolt
18	KH-24-301-01	Commutator End Cap
19	KH-25-098-11-S	Starter
20	KH-25-435-04-S	Solenoid
21	KH-25-755-33-S	Starter Pinion Kit (Inc. 22)
22	KH-25-141-05-S	Retaining Ring
23	KH-25-221-01-S	Brush Holder Kit
24	KH-25-098-11-S	Starter
25	KH-25-435-06-S	Solenoid Kit (Inc. 26)
26	KH-25-086-113-S	External Torx Head Screw
27	KH-25-098-11-S	Starter Solenoid Shift

Service starter components according to the part number printed on the starter. Starter components are NOT interchangeable. To replace complete starter assembly, order part number KH-25-098-09-S.

Kohler CV680-3042 Air Intake/Filtration

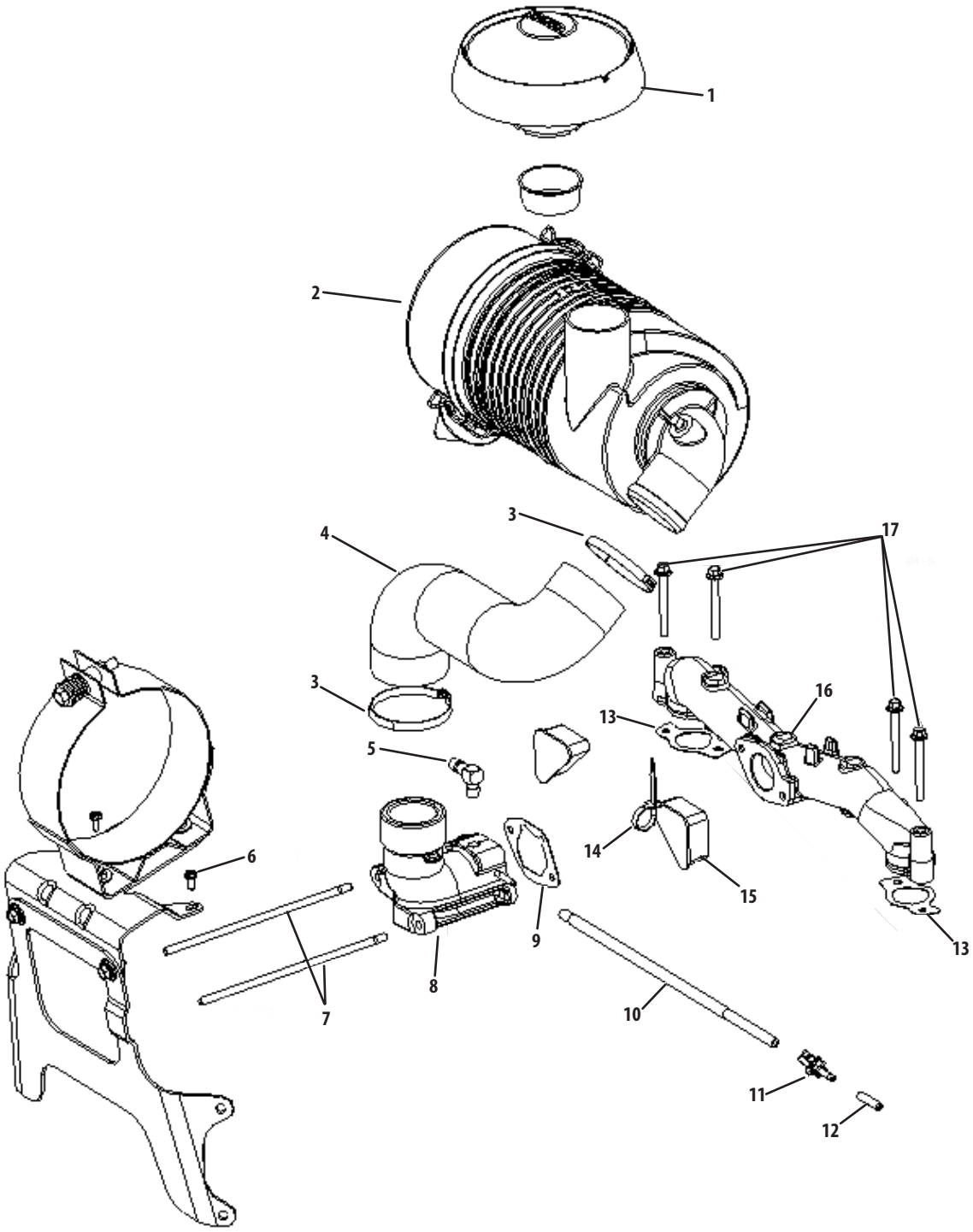

Ref.	Part-Number	Description
1	KH-25-324-04-S	Hood Inlet
2	KH-25-048-17-S	Air Cleaner
3	KH-25-237-21-S	Hose Clamp
4	KH-24-326-72-S	Air Cleaner Hose
5	KH-25-155-38-S	Connector Hose
6	KH-25-086-91-S	Screw, #8-18 X ½
7	KH-24-072-10-S	Stud, M6 x 1.0 x 180
8	KH-24-054-38-S	Elbow Kit
9	KH-24-041-14	Air Cleaner Base Gasket
10	KH-25-326-08-S	Evaporative Hose, 20
11	KH-25-155-51-S	Evaporative Connector
12	KH-25-173-33-S	Masking Cap
13	KH-24-041-01	Intake Manifold Gasket
14	KH-25-454-04-S	Tie
15	KH-24-096-17-S	Blower Housing Cover
16	KH-24-164-06	Intake Manifold
17	KH-25-086-84-S	Flange Screw, M6 x 1.0 x 55

Kohler CV680-3042 Engine Controls

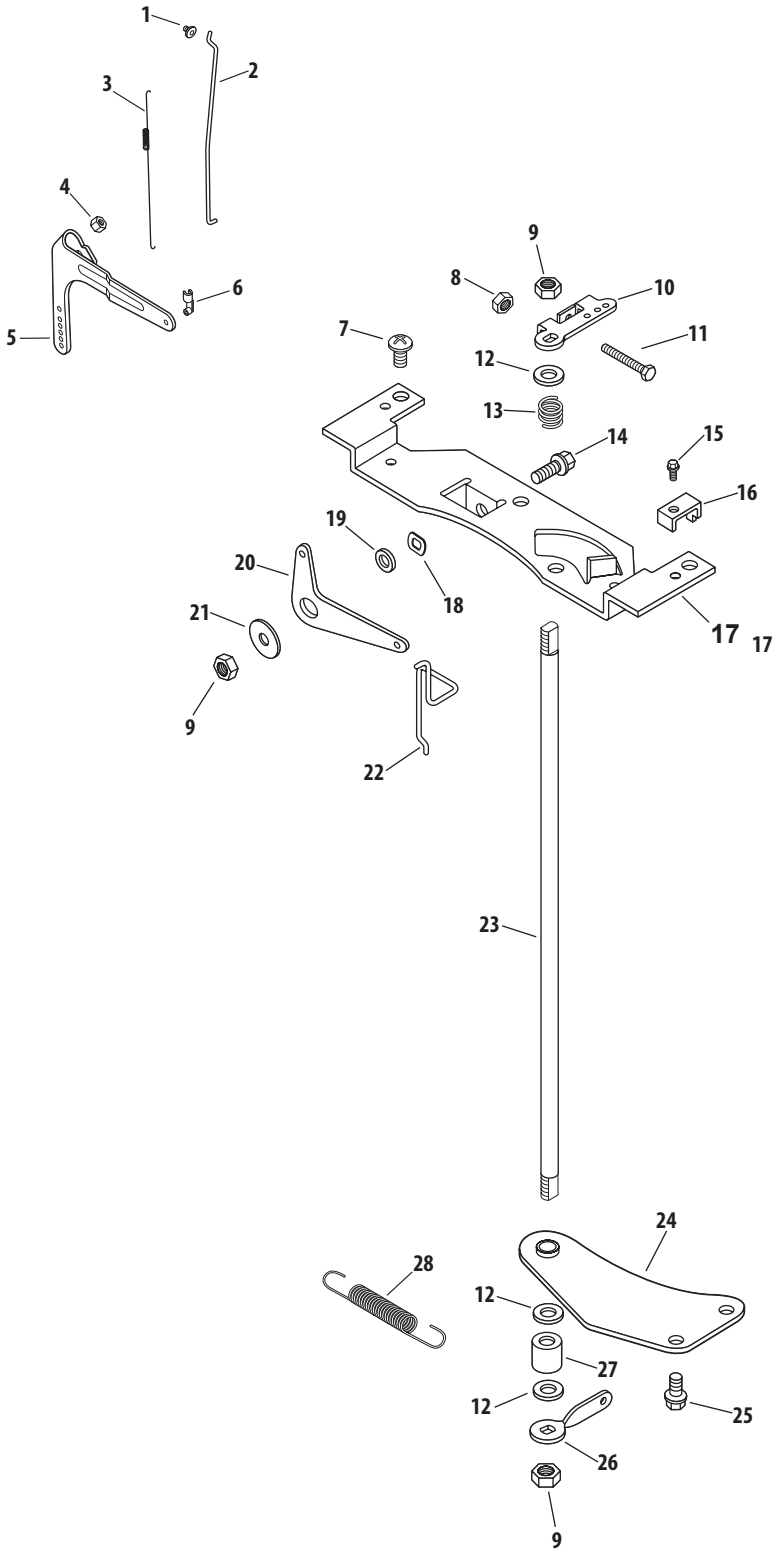

Ref.	Part-Number	Description
1	KH-25-158-08	Linkage Retaining Bushing
2	KH-24-079-04	Throttle Linkage
3	KH-24-089-01	Linkage Spring
4	KH-M-641060-S	Flange Nut, M6 x 1.0
5	KH-24-090-57-S	Governor Lever
6	KH-25-158-11	Throttle Linkage Bushing
7	KH-24-086-06	Phillips Head Screw, 11-16 X ¾
8	KH-M-446030-S	Nut, M4 x 0.7
9	KH-M-647060	Lock Nut, M6 x 1.0
10	KH-24-090-09	Throttle Control Lever
11	KH-M-401030	Cap Screw, M4 x .7 X 30
12	KH-X-25-72	Flat Washer, ¼
13	KH-24-089-20	Throttle Shaft Spring
14	KH-M-639016-S	Flange Screw, M6 x 1.0 x 16
15	KH-M-545016-S	Flange Screw, M5 x 0.8 x 16
16	KH-12-237-01	Cable Clamp
17	KH-24-126-219-S	Bracket Control
18	KH-277341	Spring Washer, ⅜
19	KH-25-431-01-S	Spacer
20	KH-24-090-20	Choke Lever
21	736-0173	Flat Washer, ¼
22	KH-24-079-10	Choke Linkage
23	KH-24-144-11	Throttle Shaft
24	KH-24-126-162-S	Throttle Shaft Bracket
25	KH-M-645016-S	Flange Screw, M6 x 1.0 x 16
26	KH-24-090-12	Throttle Control Lever
27	KH-24-112-10	Spacer
28	KH-24-089-46-S	Governor Spring (Black)
—	KH-24-211-03-S	Bolt, M6 x 1.0 x 25 (Not Shown)

Kohler CV680-3042 Exhaust & Decals

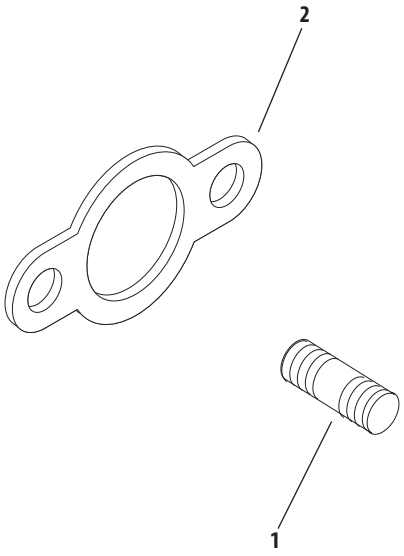

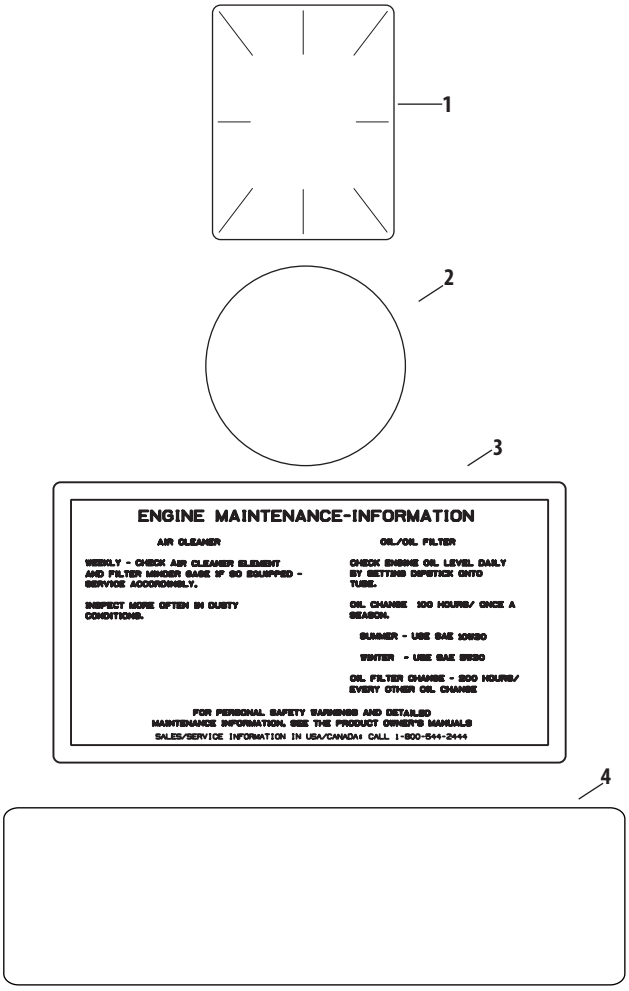

Ref.	Part-Number	Description
1	KH-25-072-24-S	Stud
2	KH-24-041-49-S	Exhaust Gasket

Ref.	Part-Number	Description
1	KH-25-113-39-S	Clear Laminate Decal
2	KH-24-113-18-S	Grass Screen Decal
3	KH-25-113-27-S	Air Cleaner Decal
4	KH-24-113-81-S	Decal, 23 HP

Artwork is representative. Actual labels may differ depending on model and specification number.

Notes



To order replacement parts, call a Customer Support Representative at (800) 965-4CUB.
Locate your nearest Cub Cadet dealer at (877) 282-8684
or visit www.cubcadet.com to find the nearest Cub Cadet dealer in your area.

CUB CADET LLC, P.O. BOX 361131 CLEVELAND, OHIO 44136-0019