Illustrated Parts Manual

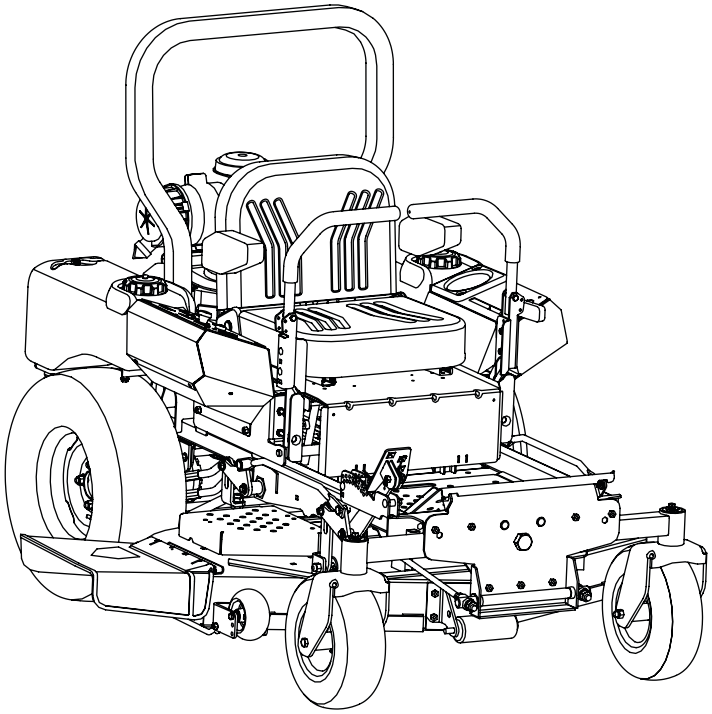

Model Shown is
a 23HP 48"

Tank 48"/60"

CUB CADET LLC, P.O. BOX 361131 CLEVELAND, OHIO 44136-0019

Printed In USA

Form No. 769-05979
(April 7, 2010)

To The Owner

Thank You

Thank you for purchasing a Cub Cadet Utility Vehicle. It was carefully engineered to provide excellent performance when properly operated and maintained.

All information in this manual is relative to the most recent product information available at the time of printing. Please be aware that this Illustrated Part's Manual may cover a range of product specifications for various models.

Components listed and/or illustrated in this manual may not be applicable to all models. We reserve the right to change product specifications, designs and equipment without notice and without incurring obligation.

Throughout this manual, all references to *right* (RH) and *left* (LH) are observed from the operating position.

Table of Contents

Brake Assembly 14
Control Assembly 20
Deck Assembly, 48" 4
Deck Spindle Assembly, 48" 6
Deck Assembly, 60" 8
Deck Spindle Assembly, 60" 10
Electrical Assembly, Kohler 22
Electrical Schematic 58
Engine, Kohler, 23HP 30-45
Engine, Kohler, 25HP 46-57
Engine Assembly, Kohler, 23 & 25HP 24
Frame Assembly 3
Front Caster Assembly 18
Fuel Tank Assembly 16
Hydro Hose & Pump Assembly 12
Label Map 59
Lift Assembly 26
Rear Bumper 17
Seat/Floor Panel Assembly 23
Wheel Assembly 19
Wheel Motors, RH & LH 28

Record Product Information

To ease in ordering replacement parts, please locate the model plate on the equipment and record the information in the provided area to the right. You can locate the model plate by looking beneath the seat.

Model Number

Serial Number

Painted Parts

When ordering painted service parts, a four digit color suffix must be added to the part number (e.g. 783-XXXXX-0637). Please refer to the table below for current color codes:

0637	Black
4021	Yellow (Cub Cadet)
0499	Beige (Cub Cadet)
0685	Blue (Cub Cadet)
0691	Black Jack (Cub Cadet Commercial)

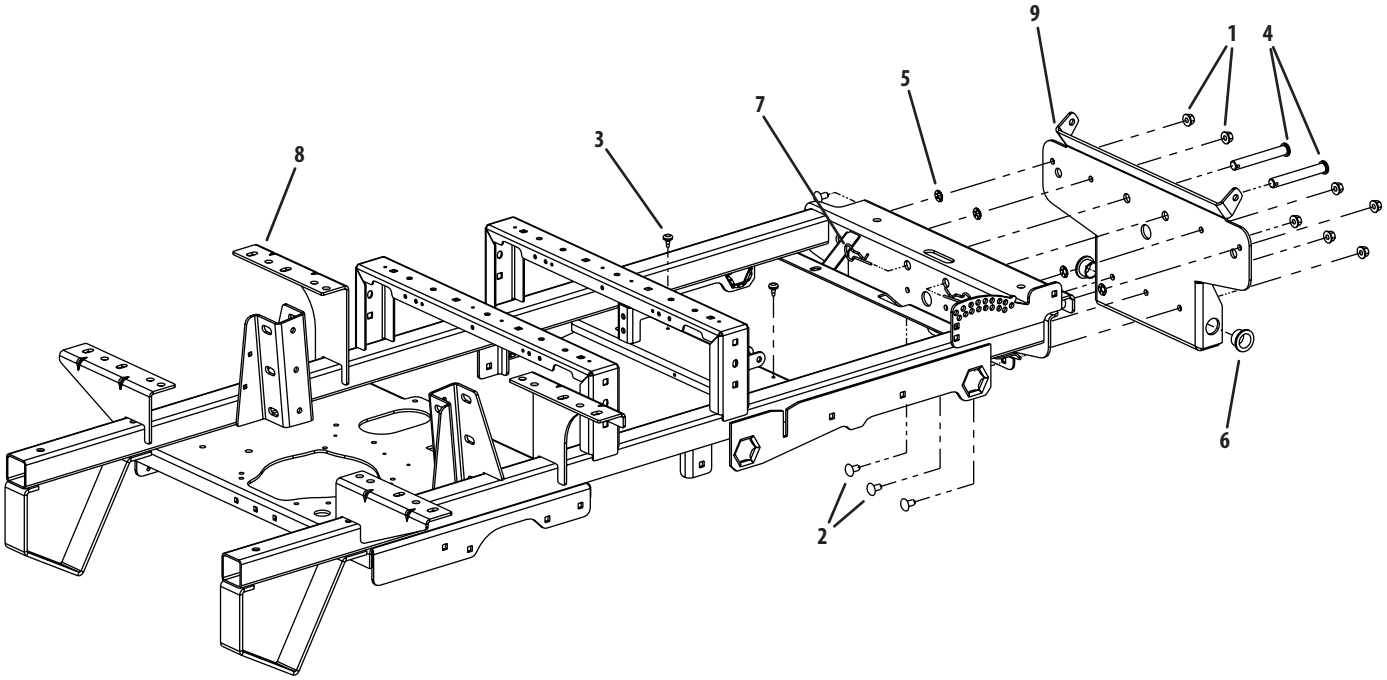

Ref.	Part Number	Description
1	00022560	Hex Nut, 3/8-16 Flange Lock
2	710-3178	Carriage Bolt, 3/8-16 x .75 Long
3	01001170	Rubber Bumper, .62 OD x .22 Thick
4	01003282	Clevis Pin, .625 Dia x 4.375 Long
5	01008225	Push Retainer, 3/8
6	02002628	Bronze Bushing, .875 ID x 1.50 OD
7	02003074	HitchPin, .120 Dia. x 3.0
8	02004247	Frame Assembly
9	02004919	Bracket Assembly, Frame, Front

48″ Fabricated Deck

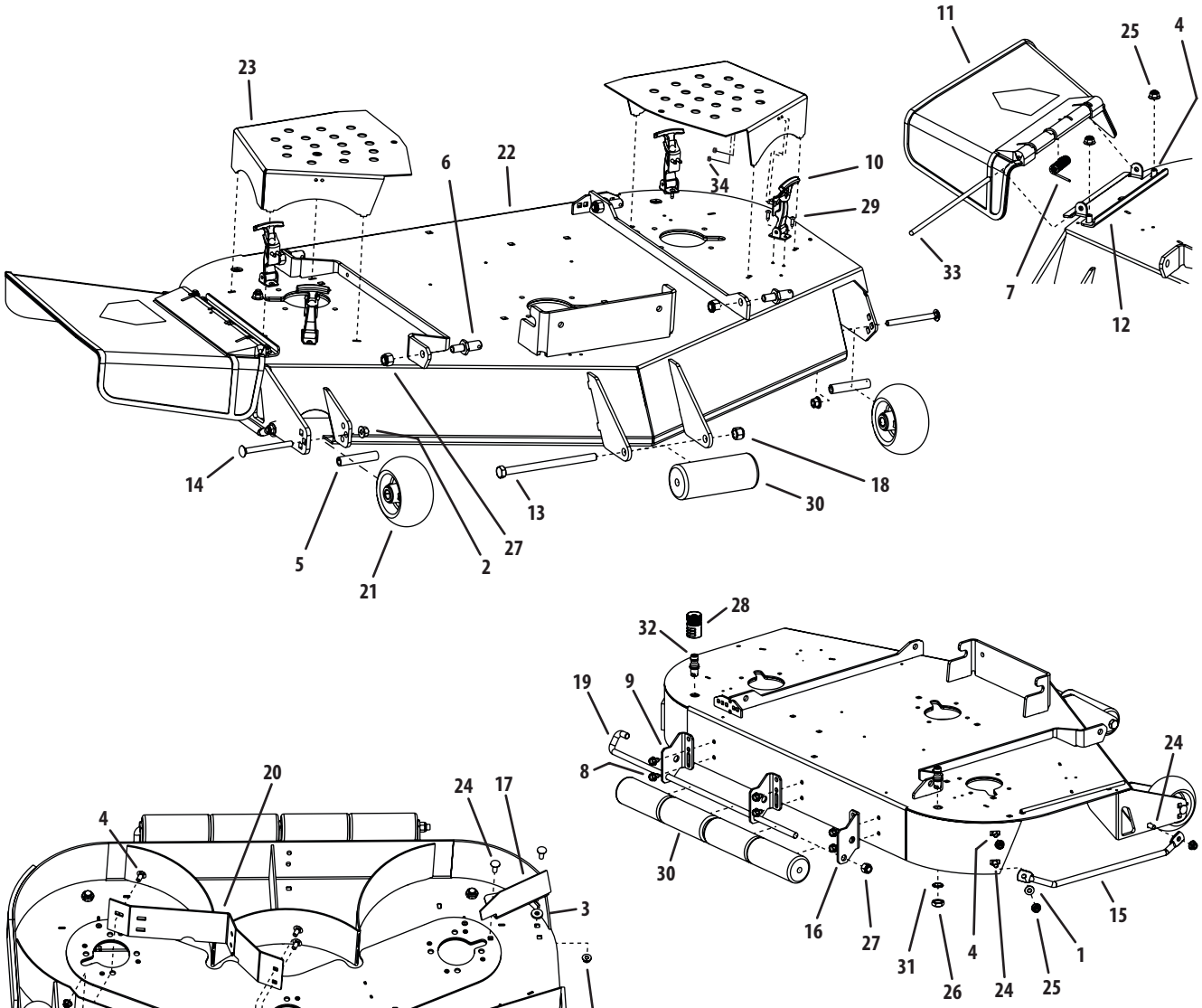

Ref.	Part Number	Description
1	00012158	Flat Washer, 3/8
2	00022560	Flange Lock Hex Nut, 3/8-16
3	00083192	Idler Washer
4	710-3178	Carriage Bolt, 3/8-16 x .75 Lg.
5	750-3193	Wheel Spacer
6	01001745	Pin, 5/8 Dia. x 1.2 Lg.
7	01003253	Torsion Spring, 0.4ID x 2.16Lg
8	01004304	Hex Index Washer Screw, 3/8-16, .05
9	01004707	Deck Roller Mount Bracket
10	01005869P	T-Handle Latch Draw
11	01006693	Deflector Chute
12	01006748	Deflector Chute Bracket
13	01006961	Hex Cap Screw, 1/2-20 x 7.50
14	01008049	Carriage Bolt, 3/8-16 x 4.00
15	01008644	Finger Guard
16	01008790	Deck Roller Mount Bracket, Right
17	01009296	Chute Baffle
18	02002299	Lock Nut, Nylon Insert, 1/2-20
19	02002799	J-Hook w/ Threaded Roller
20	02005695	48" Adjustment Baffle
21	634-3159	Complete Wheel, 5.00 Dia.
22	680-00069	48" Deck Assembly
23	703-06871	Deck Belt Cover
24	710-3168	Carriage Bolt, 3/8-16 x 1
25	712-04065	Lock Nut, Nylon Insert, 3/8-16
26	912-0641	Hex Nut, M16-1.5
27	712-3083	Lock Nut, Nylon Insert, 1/2-13
28	921-04041	Water Nozzle Adaptor
29	00017778	Phillips Head Screw, #10-32 x 1/2
30	731-3005	Front Roller
31	936-0760	Lock Washer, 17 x 23.8 x 1.95
32	737-04003D	Deck Water Nozzle
33	747-3384	Chute Deflector Rod
34	00014608	Lock Nut, Nylon Insert, #10-32

48" Fabricated Deck Spindle Assembly

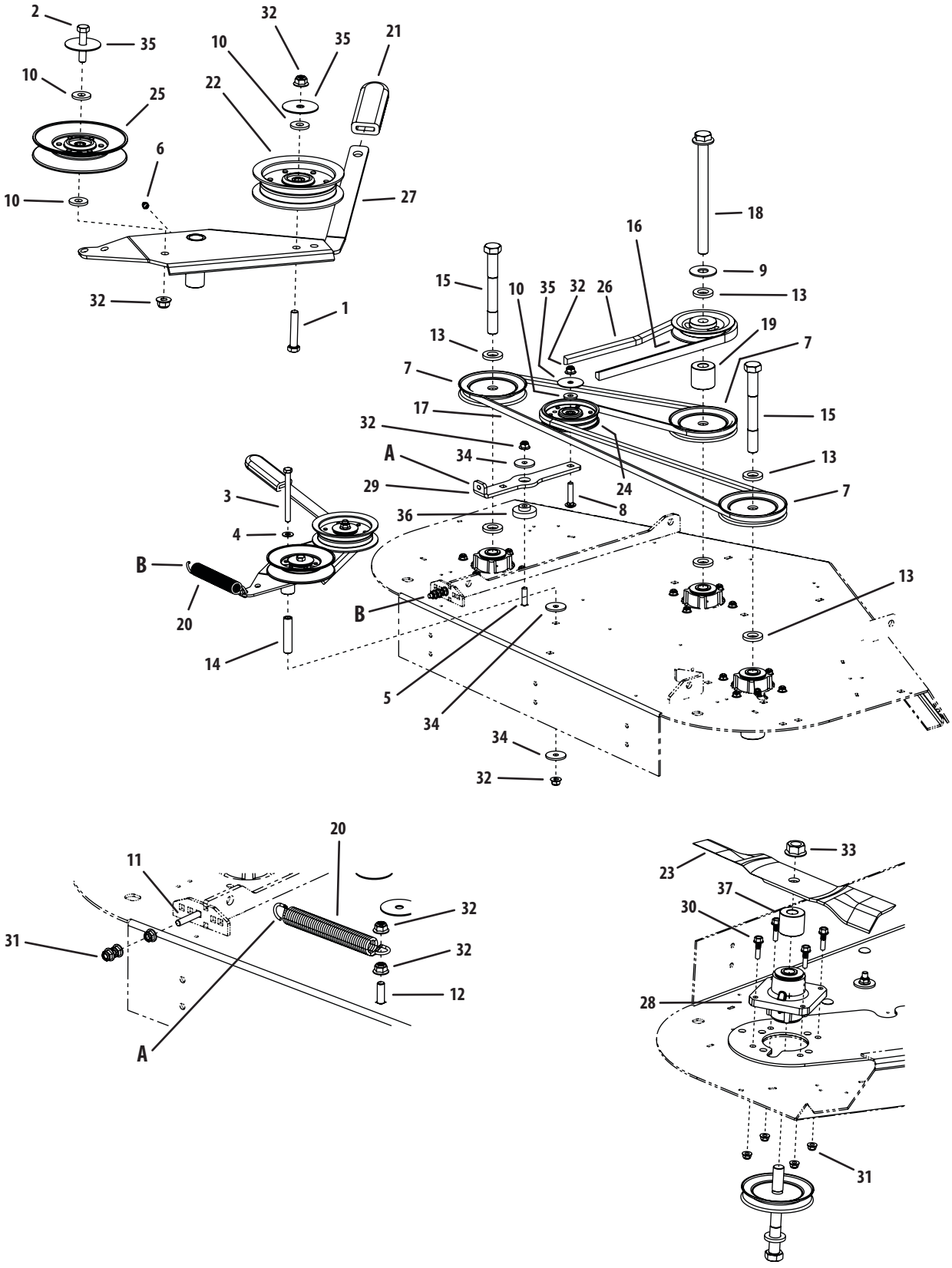

48" Fabricated Deck Spindle Assembly

Ref.	Part Number	Description
1	00002528	Hex Cap Screw, 3/8-16 x 2.00
2	00008495	Hex Cap Screw, 3/8-16 x 1-3/4
3	00011925	Hex Cap Screw, 3/8-16, 4.00
4	00012158	Washer, 3/8
5	00030276	Carriage Bolt, 3/8-16 x 1-1/2
6	00060078	Grease Fitting, 1/4-28 x 3/16
7	956-1209	V-Pulley 4.90 OD
8	710-0560	Carriage Bolt, 3/8-16, 1.75
9	736-3014	Flat Washer, .781 ID 2.00 OD, .105
10	736-3052	Flat Washer, .406 ID, 1.0 OD, .105
11	710-0458	Carriage Bolt, 5/16-18 x 1.75
12	710-3034	Carriage Bolt, 3/8-16 x 1.25
13	01003123	Spacer .812 ID x .268 LG
14	01003245	Spacer, .39 ID x .625 OD x 2.75
15	01004185	Hex Cap Screw, 3/4-16 x 6.50
16	01005202	V-Pulley 4.75 OD
17	01005374	V-Belt, A Section x 105.3
18	01005388	Hex Cap Screw, 3/4-16, 9.00
19	01006681	Spacer, .76 ID x 1.75 OD x 1.60

Ref.	Part Number	Description
20	02003712	Extension Spring, .94 OD x 7.57 LG
21	02003740	Idler Tension Handle Grip
22	02004447	Idler Pulley, 4.06 OD w/Deep Flange
23	02005017	Blade, 17.0, Hi-Lift, 0.756 ID
24	02005077	Idler Pulley, 4.06 Dia.
25	02005079	Idler Pulley, 5.06 Dia.
26	02005168	V-Belt, B Section, 86.2
27	02005509P	Idler Arm Assembly includes:
	01000308	Bearing
28	918-04939	Aluminum Spindle Assembly
29	703-07010	Idler Arm
30	710-04831	Bolt, 5/16-18 x 1.25
31	712-04063	Nut, Nylon Insert, 5/16-18
32	712-04065	Nut, Nylon Insert, 3/8-16
33	712-3078	Nut, 3/4-16, Flangelock
34	936-0227	Washer, .390 x 1.50 x .134
35	736-3040	Washer, .406 x 1.92 x .060
36	738-04376	Shoulder Spacer, .854 x .280
37	750-05329	Spacer, .76 ID x 1.75 OD x 1.50

60″ Fabricated Deck Assembly

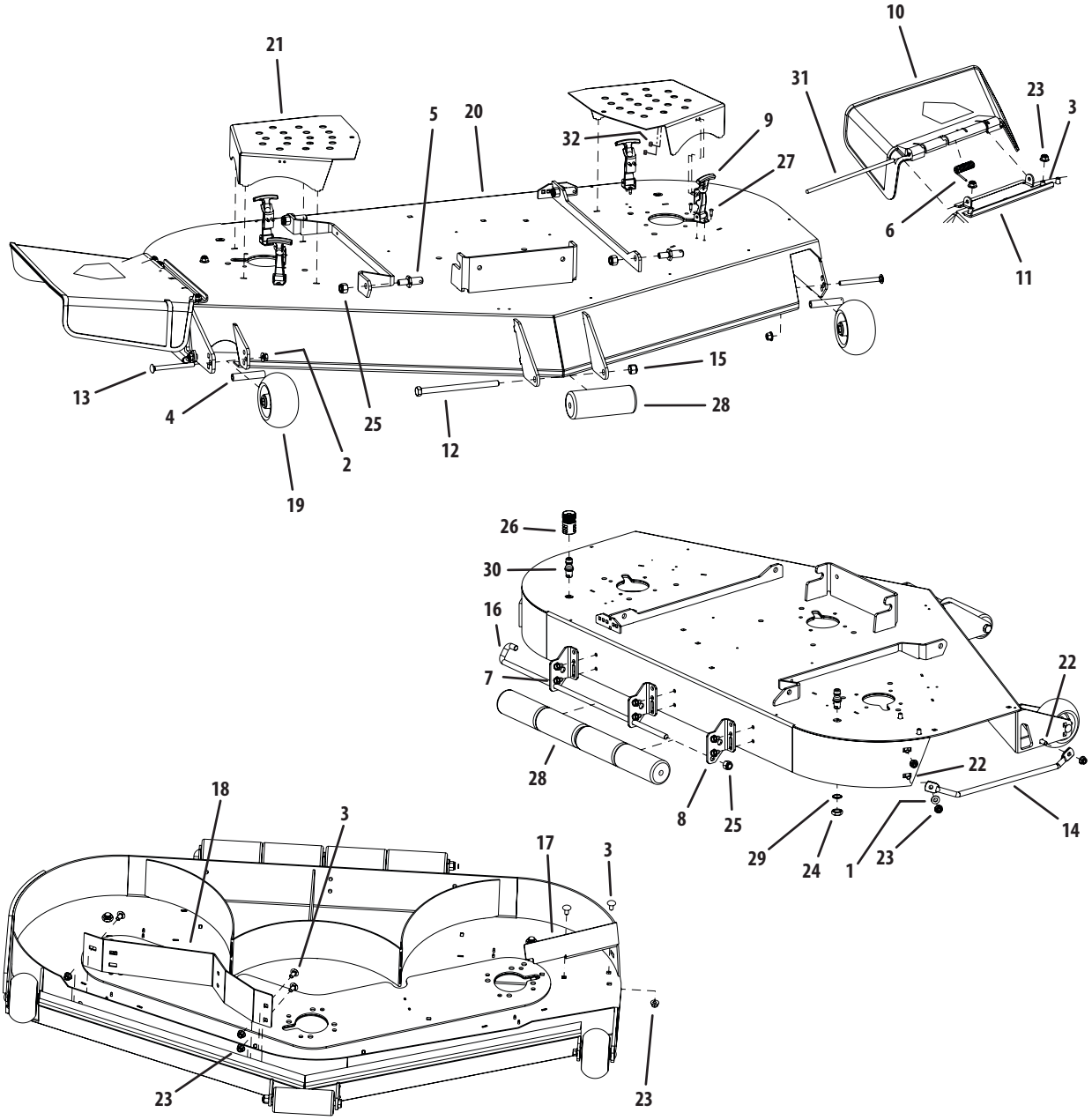

Ref.	Part Number	Description
1	00012158	Washer, 3/8
2	00022560	Flange Lock Hex Nut, 3/8-16
3	710-3178	Carriage Bolt, 3/8-16 x .75 Lg.
4	750-3193	Spacer, .390 x .620 x 3.04
5	01001745	Pin, 5/8 Dia. x 1.2 Lg.
6	01003253	Torsion Spring, 0.4ID x 2.16Lg
7	01004304	Hex Index Washer Screw, 3/8-16, .5
8	01004707	Deck Roller Mount Bracket
9	01005869P	T-Handle Latch Draw
10	01006693	Chute Deflector
11	01006748	Chute Deflector Bracket
12	01006961	Hex Cap Screw, 1/2-20 x 7.50
13	01008049	Carriage Bolt, 3/8-16 x 4.00
14	01008644	Finger Guard
15	02002299	Lock Nut, Nylon Insert, 1/2-20
16	02002799	J-Hook w/ Threaded Roller

Ref.	Part Number	Description
17	02005195	Chute Baffle
18	02005694	Baffle, 60" Adjustment
19	634-3159	Complete Wheel, 5.00 Dia.
20	680-00097	60" Deck Assembly
21	703-06871	Deck Belt Cover
22	710-3168	Carriage Bolt, 3/8-16 x 1.00
23	712-04065	Lock Nut, Nylon Insert, 3/8-16
24	912-0641	Hex Nut, M16-1.5
25	712-3083	Lock Nut, Nylon Insert, 1/2-13
26	921-04041	Water Nozzle Adaptor
27	00017778	Phillips Head Screw, 10-32
28	731-3005	Front Roller
29	936-0760	Lock Washer, 17 x 23.8 x 1.95
30	737-04003D	Deck Water Nozzle
31	747-3384	Chute Deflector Rod
32	00014608	Lock Nut, Nylon Insert, 10-32

60" Fabricated Deck Spindle Assembly

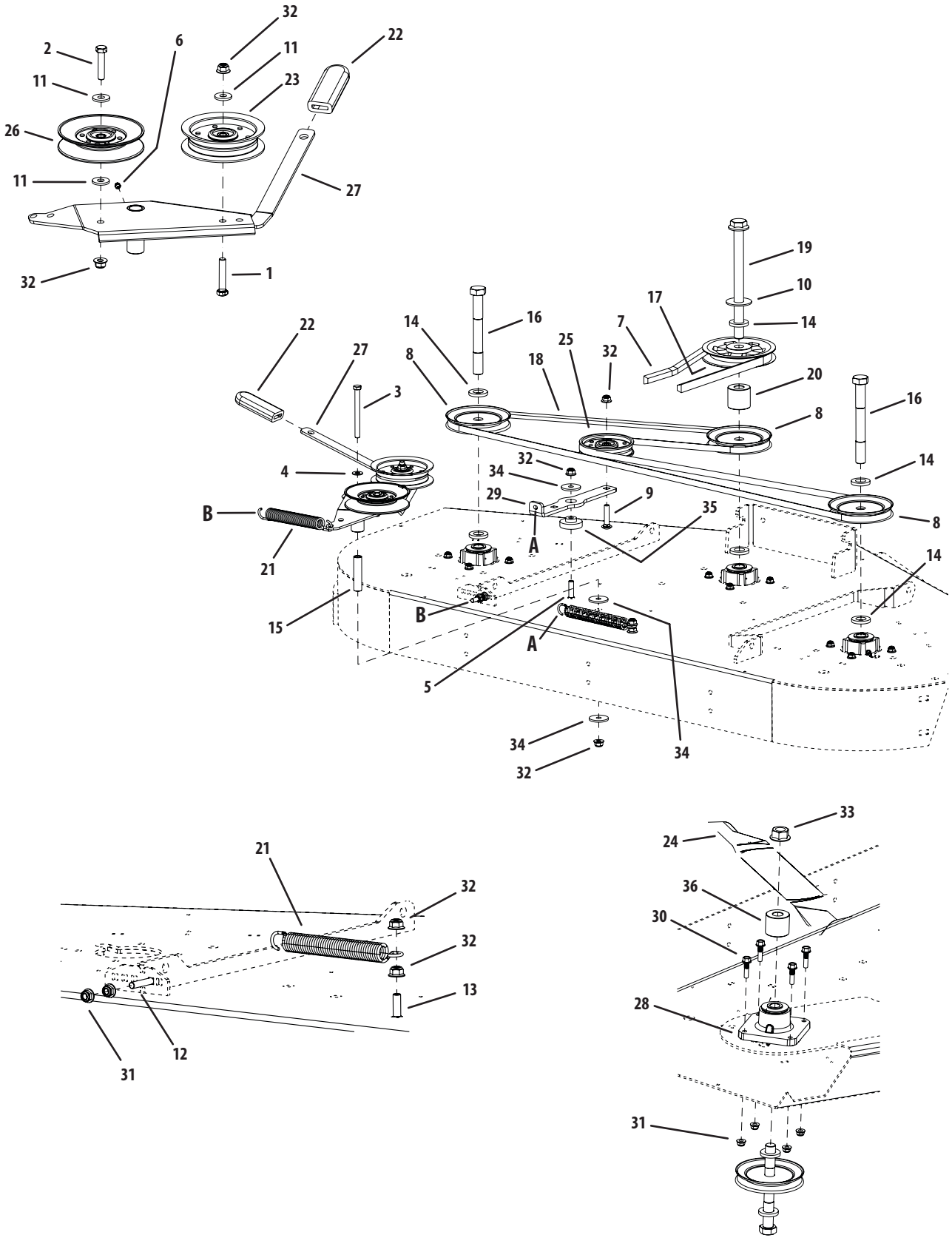

60" Fabricated Deck Spindle Assembly

Ref.	Part Number	Description
1	00002528	Hex Cap Screw, 3/8-16 x 2.00
2	00008495	Hex Cap Screw, 3/8-16 x 1-3/4
3	00011925	Hex Cap Screw, 3/8-16 x 4.00
4	00012158	Washer, 3/8
5	00030276	Carriage Bolt, 3/8-16 x 1-1/2
6	00060078	Grease Fitting, 1/4-28 x 3/16
7	00068079	V-Belt, B-Section, BK90
8	956-1209	V-Pulley, 4.90 OD
9	710-0560	Carriage Bolt, 3/8-16, 1.75
10	736-3014	Flat Washer, .781 ID 2.00 OD, .105
11	736-3052	Flat Washer, .406 ID, 1.0 OD, .105
12	710-0458	Carriage Bolt, 5/16-18 x 1.75
13	710-3034	Carriage Bolt, 3/8-16 x 1.25
14	01003123	Spacer, .812 ID x 1.47 OD x .218
15	01003245	Spacer, .39 x .635 x 2.75
16	01004185	Hex Cap Screw, 3/4-16 x 6.50
17	01005203	V-Pulley, 5.774 OD
18	01005376	V-Belt, A Section x 122.3
19	01005388	Hex Cap Screw, 3/4-16, 9.00

Ref.	Part Number	Description
20	01006681	Spacer, .76 ID x 1.75 OD x 1.60
21	02003712	Extension Spring, .94 x OD x 7.57
22	02003740	Grip, 1.0 x 3.2 x .25
23	02004447	Idler Pulley, 4.06 OD
24	02005019	Hi-Lift Blade, 21.0, 0.756 ID
25	02005077	Flat Pulley with Flanges
26	02005079	Idler Pulley, 5.06 OD
27	02005509	Idler Arm Assembly includes:
	01000308	Bearing
28	918-04939	Aluminum Spindle Assembly
29	703-07010	Idler Arm
30	710-04831	Bolt, 5/16-18 x 1.25
31	712-04063	Nut, 5/16-18, Nylon Flange Lock
32	712-04065	Nut, 3/8-16, Nylon Flange Lock
33	712-3078	Flange Hex Nut, 3/4-16
34	936-0227	Washer, .390 x 1.500 x .134
35	738-04376	Shoulder Screw, .854 x .280
36	750-05329	Spacer, .76 ID x 1.75 OD x 1.50

Hydro Hose & Pump Assembly

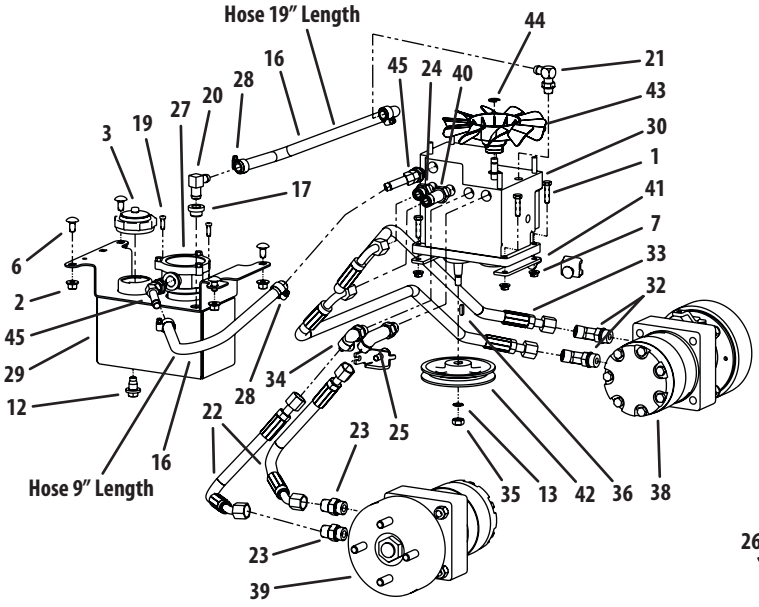

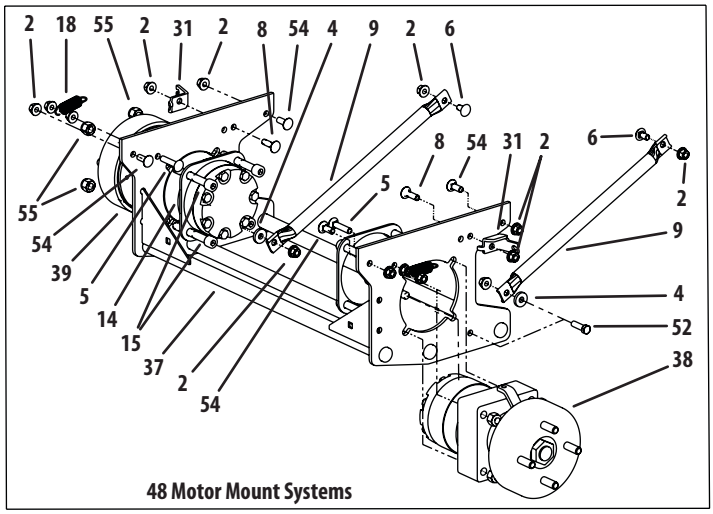

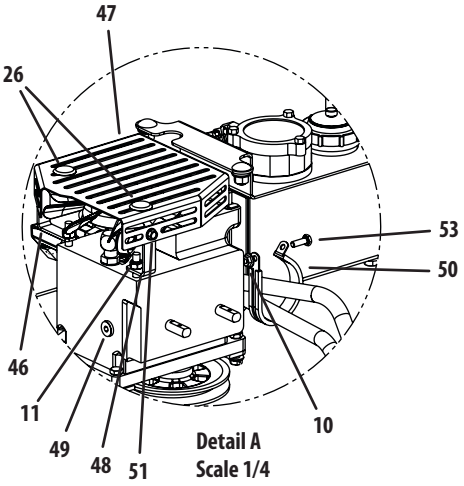

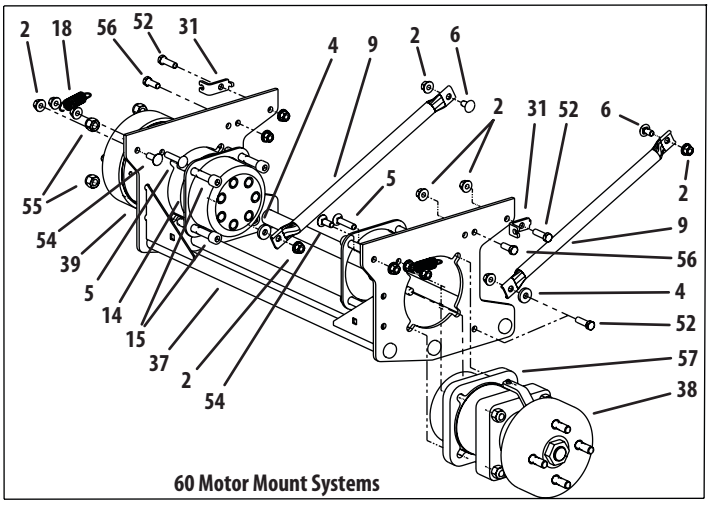

Ref.	Part Number	Description
1	00013116	Hex Cap Screw, 5/16-18 x 1-1/4
2	00022560	Flange Lock Hex Nut, 3/8-16
3	00030261	Cap, Hydro Oil Tank
4	00083192	Idler Washer
5	710-0560	Hex Carriage Screw, 3/8-16, 1.75
6	710-3178	Carriage Bolt, 3/8-16 x .75 LG.
7	712-3004A	Nut, 5/16-18, Flange Lock
8	710-3034	Carriage Screw, 3/8-16 x 1.25
9	01002593	Strut Frame
10	912-3027	Nut, 1/4-20, Flange Lock
11	01003561	Hex Nut, M8 x 1.2, Nylon Top Lock
12	738-0940	Oil Pan Drain Plug w/ Seal
13	01005851	Washer, 3/8 ID, External Tooth
14	01006949	Hydro Wheel Motor Backup Plate
15	01007791	Socket Head Capscrew, 1/2-13; 3-1/2
16	N/A	Hydraulic Hose, .50 ID x .75 OD
17	02000296	Grommet Fitting, .54 ID x .78 OD
18	02000401	Spring Extension, .740 OD x 2.656
19	02000841	Socket Head Cap Screw, 1/4-20 x 0.75
20	02001151	Fitting Elbow Spur, 5/8 x 1/2
21	02001160	Fitting Elbow, 9/16 x 1/2
22	02001177	Short Pressure Hose Assembly
23	02001715	Adaptor Fitting, 8 x 10
24	02001975	Adaptor Fitting, 8 x 8
25	02002003	Adaptor, 8 x 8
26	731-06522	Plastic Plug
27	02002257	Hydraulic In-Tank Filter includes:
	02002258	Replacement Filter
28	02002392	Hose Clamp, 1/2
29	02002701	Hydraulic Tank Assembly
30	02004242P	Hydro Pump

Ref.	Part Number	Description
31	02003826	Rear Cable Mounting Bracket
—	703-07750	Rear Cable Mounting Bracket (60”)
32	02004254	Adaptor Fitting, 8 x 10
33	02004256	Long Pressure Hose Assembly
34	02004258	Adaptor Fitting, 8 x 8
35	02004427	Nut, M10 x 1.5, Left Hand
36	02004428	Key
37	02004429	Hydro Motor Frame Assembly
38	02004441P	Hydro Motor, RH Assembly
—	918-04721	Hydro Motor, RH Assembly (60”)
39	02004442P	Hydro Motor, LH Assembly
—	918-04720	Hydro Motor, LH Assembly (60”)
40	02004922	Adaptor Fitting, 8 x 8
41	02004923	Spacer Plate, Pump
42	02005143	Hydro Pump Pulley
43	02005158	Fan
44	02005159	E-Clip
45	02005160	Fitting, 3/4 ORB x 1/2 Tube
46	02005161	Left Hand Fan Bracket
47	02005162	Pump Cover
48	02005163	Right Hand Fan Bracket
49	02005166	Plug Adaptor
50	02005672	Clamp, 2.00 x 3.50
51	710-0653	Self Tapping Screw, 1/4-20 x 0.375
52	710-3005	Hex Cap Screw, 3/8 -16 x 1.25
53	710-3015	Hex Cap Screw, 1/4-20 x 0.75
54	710-3168	Carriage Bolt, 3/8-16 x 1
55	712-3083	Washer lock 3/8 zinc
56	710-0514	Hex Cap Screw, 3/8-16 x 1.00 (60”)
57	01009775	Spacer, Hydro Wheel Motor (60”)

Brake Assembly

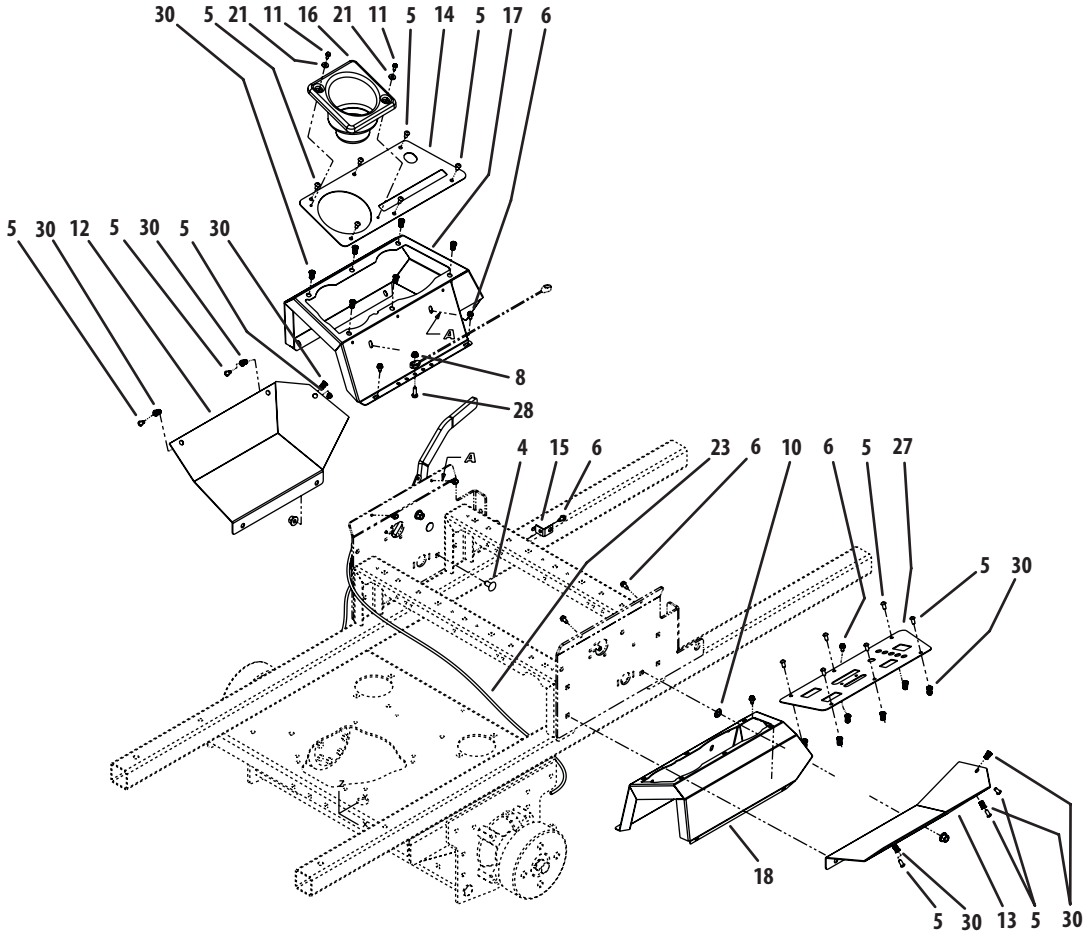

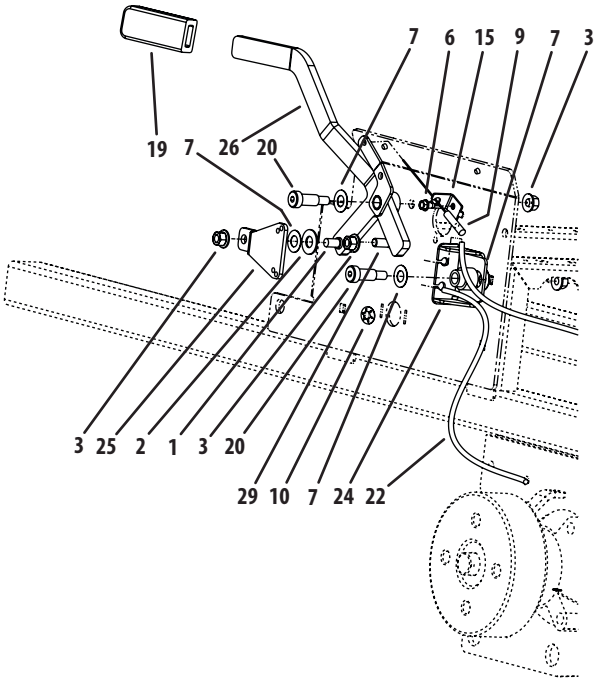

Ref.	Part Number	Description
1	00011450	Shoulder Bolt, 1/2 x 1/2
2	00012577	Washer, 1/2 Zinc
3	00022560	Flange Lock Hex Nut, 3/8-16
4	710-3178	Carriage Bolt, 3/8-16 x .75
5	710-3256	Screw Button Head, 1/4-20 x .5
6	710-0599	Screw, TT, 1/4-20, 0.5, Washer
7	936-0369	Washer, .508 ID x 1.0 OD x .020
8	912-3027	Hex Flange Lock Nut, 1/4-20
9	01008198P	Left Hand Brake Cable
10	01008225	Push Retainer, 3/8
11	01008531P	Screw, #10-32 x 0.500
12	02002785	Lower Panel, LH
13	02002786	Lower Panel, RH
14	02002806	Control Panel Cover, LH
15	02002864	Brake Cable Mounting Bracket
16	02002874	Cup Holder
17	02002969	Control Panel, LH
18	02002970	Control Panel, RH
19	02003010	Parking Brake Grip
20	02003603	Shoulder Bolt, 1/2 x 1.00, 3/8-16
21	02003725	Washer, 3/16
22	02003770	Brake Cable, LH
23	02003774	Brake Cable, RH
24	02003776	Brake Cable Bracket
25	02003841	Centering Bracket
26	02005151	Brake Lever
27	703-07603	Control Panel Cover, RH
28	710-3015	Screw, Hex, Cap, 1/4-20 x .75
29	710-3168	Carriage Bolt, 3/8-16, 1.00
30	712-04199	U-Nut, 1/4-20

Fuel Tank Assembly

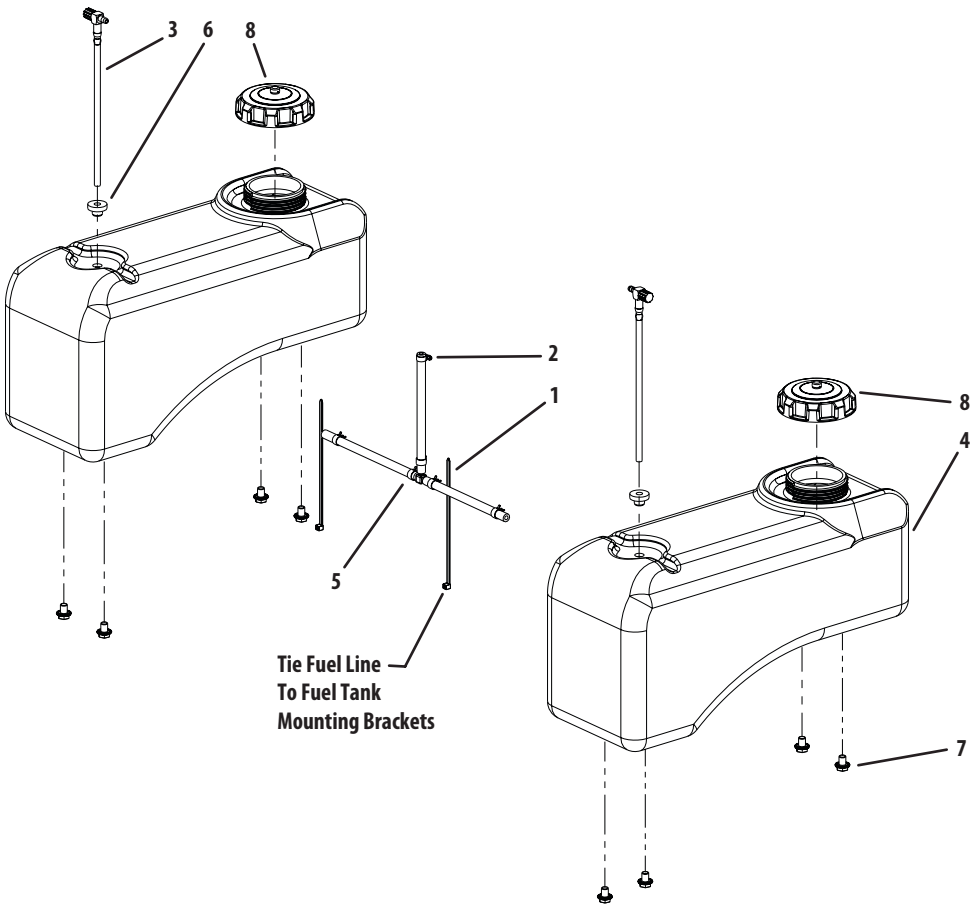

Ref.	Part Number	Description
1	725-0157	Cable Tie
2	01000215	Hose Clamp, SAE #4: 1/4-5/8, SS
3	01003116	Fuel Fitting
4	01004350	Fuel Tank
5	02001908	Fuel Hose Assembly includes:
	N/A	Hose, 1/4" Fuel Line (in inches)
	00012235	Clamp, Union
	01003473	Tee Fitting, Fuel
6	02002253	Grommet, Fuel Tank
7	02005013	Hex Cap Screw, 3/8-16 x .500
8	951-3124E	Fuel Cap, 3.5, Tethered

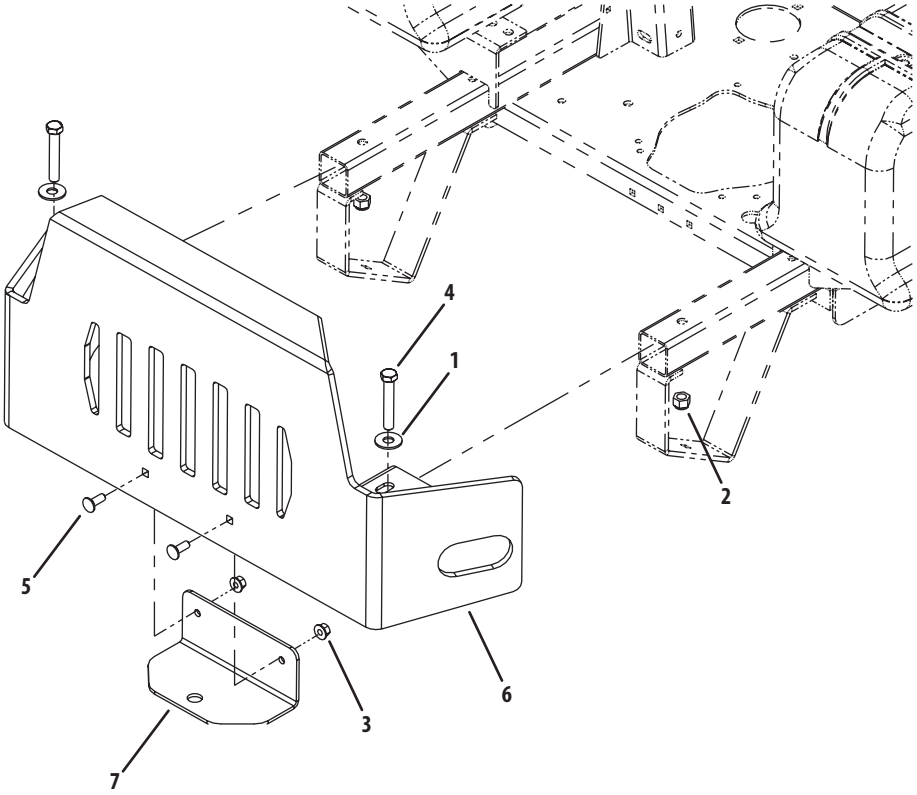

Ref.	Part Number	Description
1	00011459	Flat Washer, 1/2
2	712-3083	Hex Nut, 1/2-13, Insert Lock
3	00022560	Nut, Hex 3/8-16 Flange Lock
4	00030046	Hex Cap Screw, 1/2-13, 3.00
5	710-3168	Carriage Bolt, 3/8-16 x 1.00
6	02004118	Bumper Assembly
7	02004120	Hitch Bracket

Front Caster Assembly

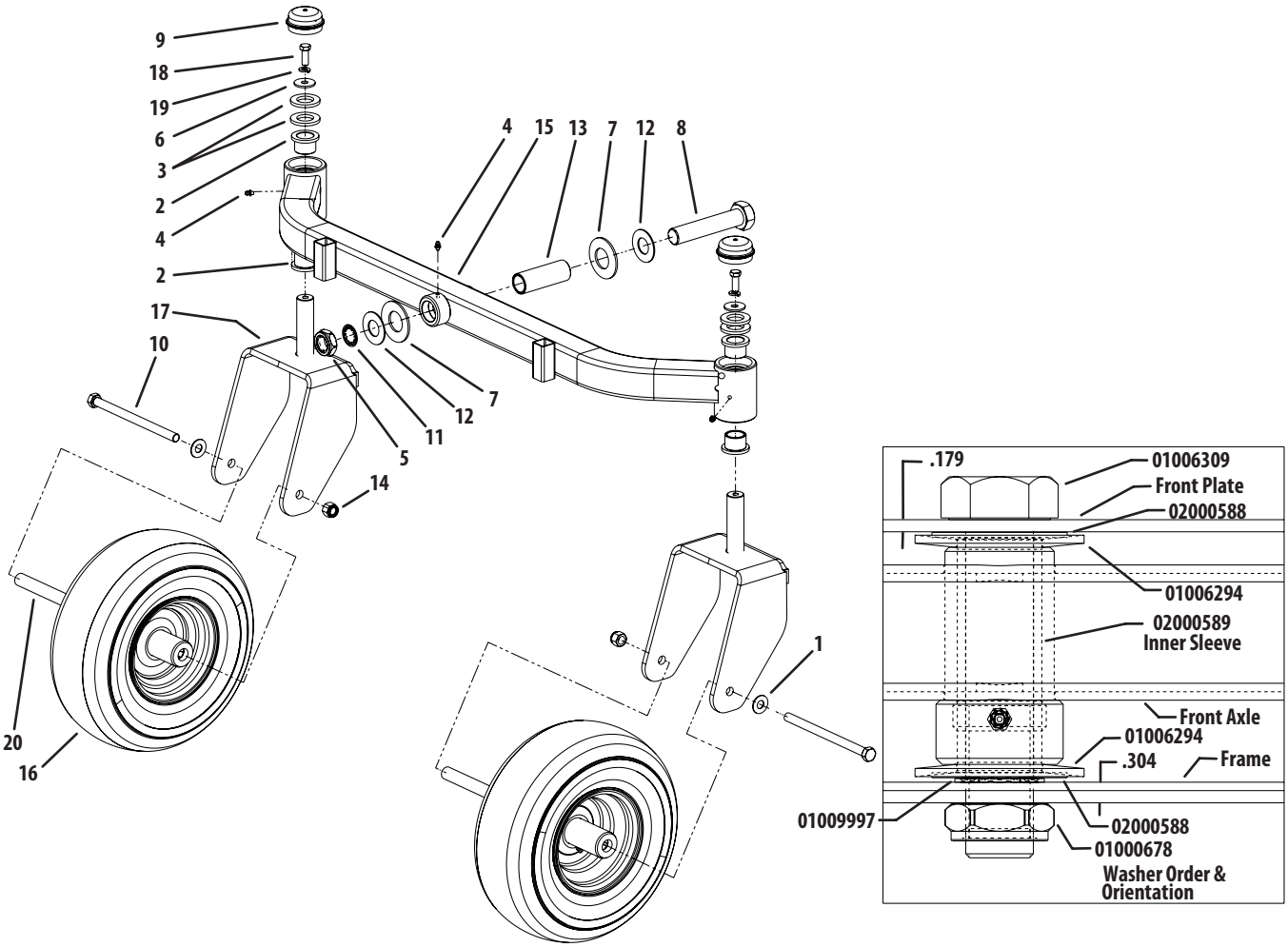

Ref.	Part Number	Description
1	00012577	Washer, 1/2 x 1 Shim
2	00023793	Flange Bearing, 1.013 ID
3	00023822	Washer Special
4	00060078	Grease Fitting, 1/4-28 x 3/16
5	712-3075	Nut, Jam, 1.0-14, Insert Lock
6	936-0133	Flat Washer, 1.25 x .411 x .100
7	01006294	Bell Washer, 1.25 ID x 2.5 x .157
8	01006309	Hex Cap Screw, 1-14 x 5.0
9	01006347	Grease Cap, 1.986 OD
10	01006961	HHCS, 1/2-20, 7.50
11	01009997	Retainer Extension, Self Locking
12	02000588	Flat Washer, 1.00 ID

Ref.	Part Number	Description
13	02000589	Spacer, 1.005 ID x 1.25 OD x 3.6
14	02002299	Lock Nut, Nylon Insert, 1/2-20
15	02004384	Front Axle Assembly (60”)
	02005142	Front Axle Assembly, Straight (48”)
16	02005000	Wheel, 13 x 5.00 x 6.0, includes:
	02002105	Tire
	02002106	Roller Bearings (per tire)
	02002107	Retainer Bushings (per tire)
17	02005001	Castor Wheel Mounting Bracket
18	710-0514	Hex Cap Screw, 3/8-16 x 1.00
19	936-0169	Lock Washer, 3/8
20	750-04775A	Spacer, .51 ID x .75 OD x 5.825

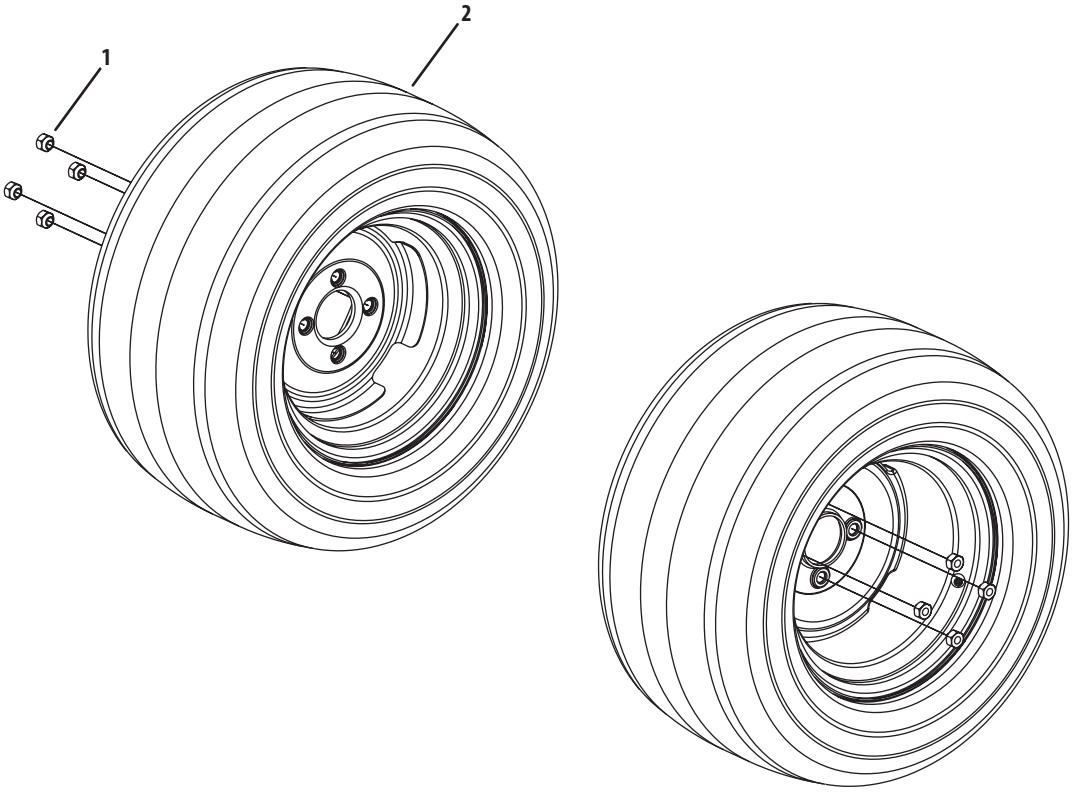

Ref.	Part Number	Description
1	00012187	Lug Nut, 1/2-20
2	02002666	Wheel Assembly, 23 x9.5-12, Beige Includes:
	02002104	Tire, 23 x 9.5-12
		Rim, 12 Dia x 7.00 width
	02002668	Wheel Assembly, 24 x12-12, Beige Includes:
	00073975	Tire, 24 x 12-12
		Rim, 12 Dia x 8.50 width
	01006324†	Wheel Assembly, 24 x 12-12, Turf Saver
	00073975†	Tire, 24 x 12-12, Turf Saver

† Optional Equipment

Control Assembly

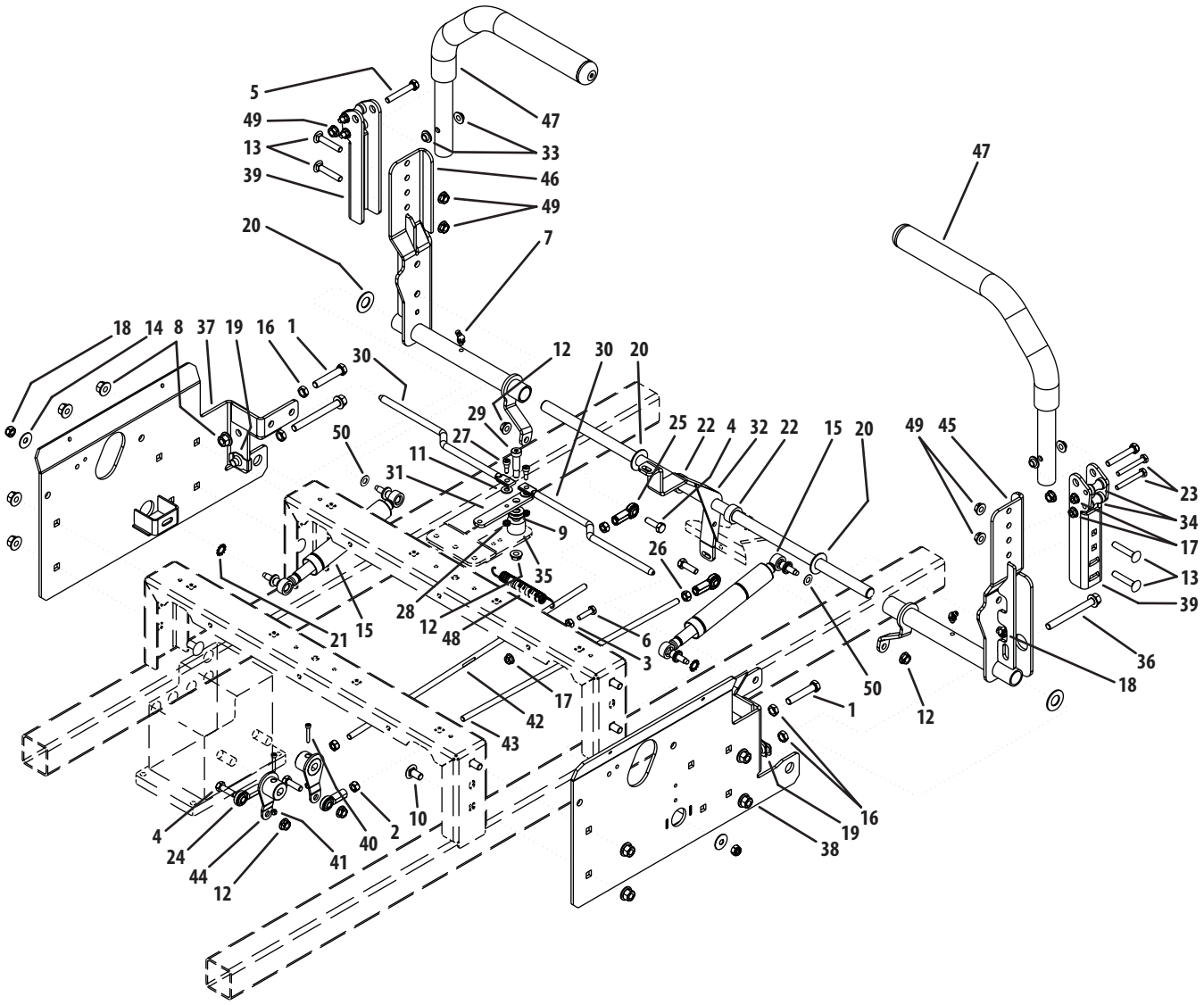

Ref.	Part Number	Description
1	00002528	Hex Cap Screw, 3/8-16 x 2.00
2	912-3057	Hex Nut, 5/16-24
3	00012186	Hex Nut, 1/4-20
4	710-0376	Hex Cap Screw, 5/16-18 x 1.0
5	00013198	Hex Cap Screw, 5/16-18 x 2.00
6	00013416	Hex Cap Screw, 1/4-20 x 1.00
7	00021958	Grease Fitting, 1/4-28, 45 degree
8	00022560	Hex Nut, 3/8-16, Lock Flange
9	00061053	Washer, 3/8, SS
10	710-3178	Carriage Bolt, 3/8-16 x .75
11	936-0463	Flat Washer, 1.4 x .630 x .0515
12	712-3004A	Nut, Lock, HexFlange, 5/16-18
13	710-0458	Carriage Bolt, 5/16-18 x 1.75
14	936-0425	Belle Washer, .325 x .930 x .045
15	01001727	Cylinder Return to Neutral
16	01002511	Nut, 3/8-16, Jam
17	712-04064	Hex Flange Lock Nut, 1/4-20
18	01003561	Nut, Hex, Center Lock, M8
19	01003947	U-Nut, 3/8-16, .75
20	01004003	Flat Washer, 5/8 Nylon
21	01005851	External Washer, 3/8
22	01006350	Shaft Collar
23	01006898	Hex Cap Screw, 1/4-20 x 2.00
24	01008410P	Rod End, 5/16, Right Hand
25	01008551P	Rod End, 5/16, Left Hand
26	01008576P	Hex Nut, 5/16-24, Left Hand
27	01009322	Shoulder Bolt, 1/4 x 1/4

Ref.	Part Number	Description
28	01009377	Nut w/ Star Washer, 10-24
29	02000069	Screw, Shoulder Control Rod
30	02002542	Brake/Control Rod
31	02002543	Lapbar Control Arm
32	02002555	Lapbar Control Shaft Assembly
33	02003419	Bushing, .310 x .172 x .688 x .06
34	02003644	Spacer, .251 ID x .38 OD x 1.13 LG
35	02003664	Spacer, .405 ID x 1.0 OD x .72
36	02003666	Hex Cap Screw, 3/8-16 x 3.50
37	02003883	Side Panel, Control, Left
38	02003884	Side Panel, Control, Right
39	02004044	Lapbar Pivot Bracket
40	02004404	Capscrew,, M4 x 0.7 x 25mm
41	02004405	Nut, M4 x 0.7mm, Nylock
42	02004448	Control Rod, 5/16-24, RH/LH x 19.5
43	02004449	Control Rod, 5/16-24, RH/LH x 16.5
44	02004903	Pump Mount Bracket
45	02004372	Lapbar Control Assembly, RH
	01004265	Bearing
46	02004371	Lapbar Control Assembly, LH
	01004265	Bearing
47	02004933	Lapbar Assembly includes:
	02002662	Grip, 1.0
48	932-0470A	Extension Spring, .53 OD x 4.75
49	712-04063	Nut, Lock, HexFlange, 5/16-18
50	00012168	Lock Washer, 5/16

Kohler Electrical Assembly

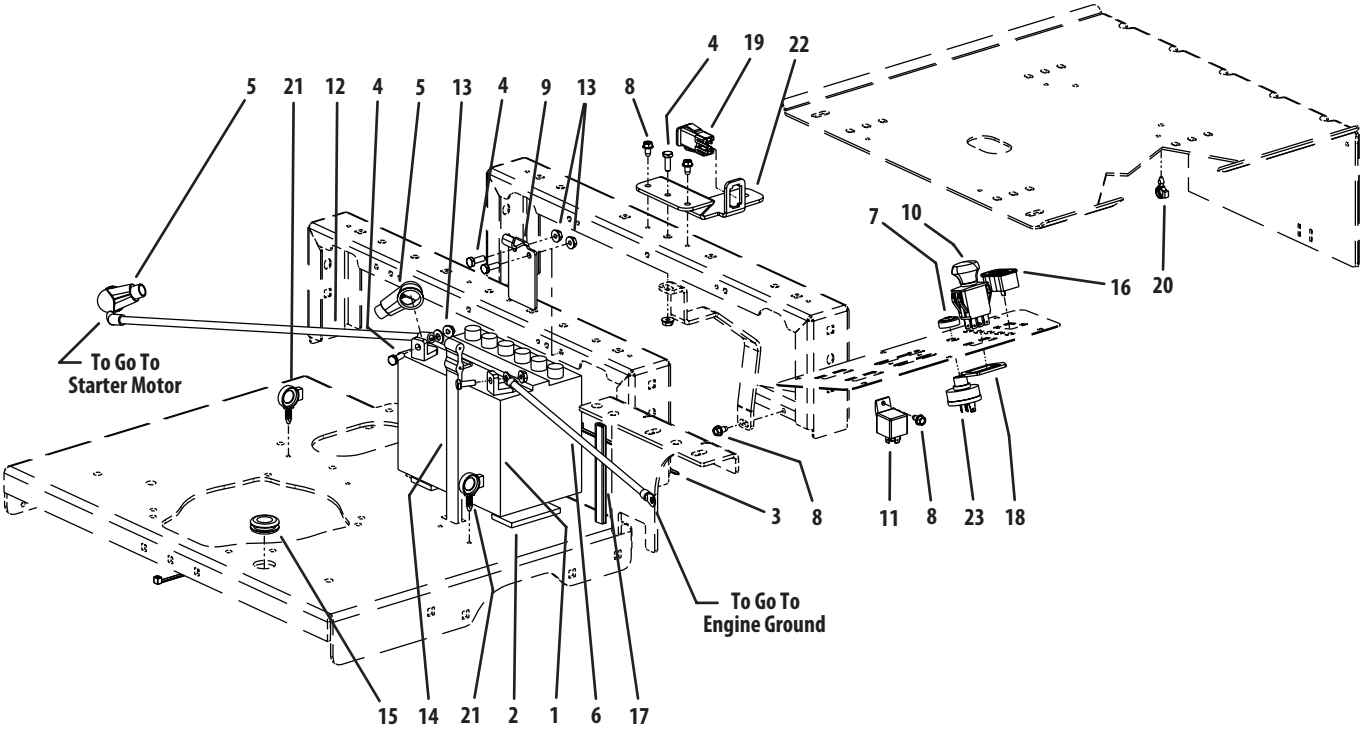

Ref.	Part Number	Description
1	925-1707D	Battery, 12V 225CCA 30 Min
2	00012038	Rubber Pad, .25 x 1.50 x 3.00
3	725-0157	Tie, Cable, 3/16 x .05 x 7.4"
4	710-3015	Screw, Hex, Cap, 1/4-20 x .75
5	00013258	Boot, 1" OD Rubber Battery-PST, Red
6	00024233	Cable, Battery, Black, 17"
7	00032097	Nut, W/Cap, 5/8-32 Ignition
8	710-0599	Self Tapping Screw, 1/4-20 x 1/2
9	02004931	Stop Bracket
10	01002111	Switch, Electric, PTO
11	01002251	Relay, 12V 40A
12	01002252	Cable, Battery, Red, 24"
13	912-3027	Hex Flange Lock Nut, 1/4-20
14	723-3064	Strap, Battery

Ref.	Part Number	Description
15	01004040	Grommet, .75 ID
16	925-04893	Meter, Hour
17	735-04130	Battery Edge Trim
18	01009905	Bracket, PTO Switch Retainer
19	02000024P	Switch, Safety N.O./N.C.
20	02003038	Electrical Conduit Clip, 3/8
21	02003775	Electrical Conduit Clip, 5/8
22	02004382	Bracket, Lapbar/Brake Control
23	01003581P	Switch, Ignition, 6 Pin includes:
	725-1341B	Key
—	02003780†	Harness Adaptor
—	02004389†	Harness Assembly
—	01001811†	Hourmeter, Harness

† Not Shown

Seat/Floor Panel Assembly

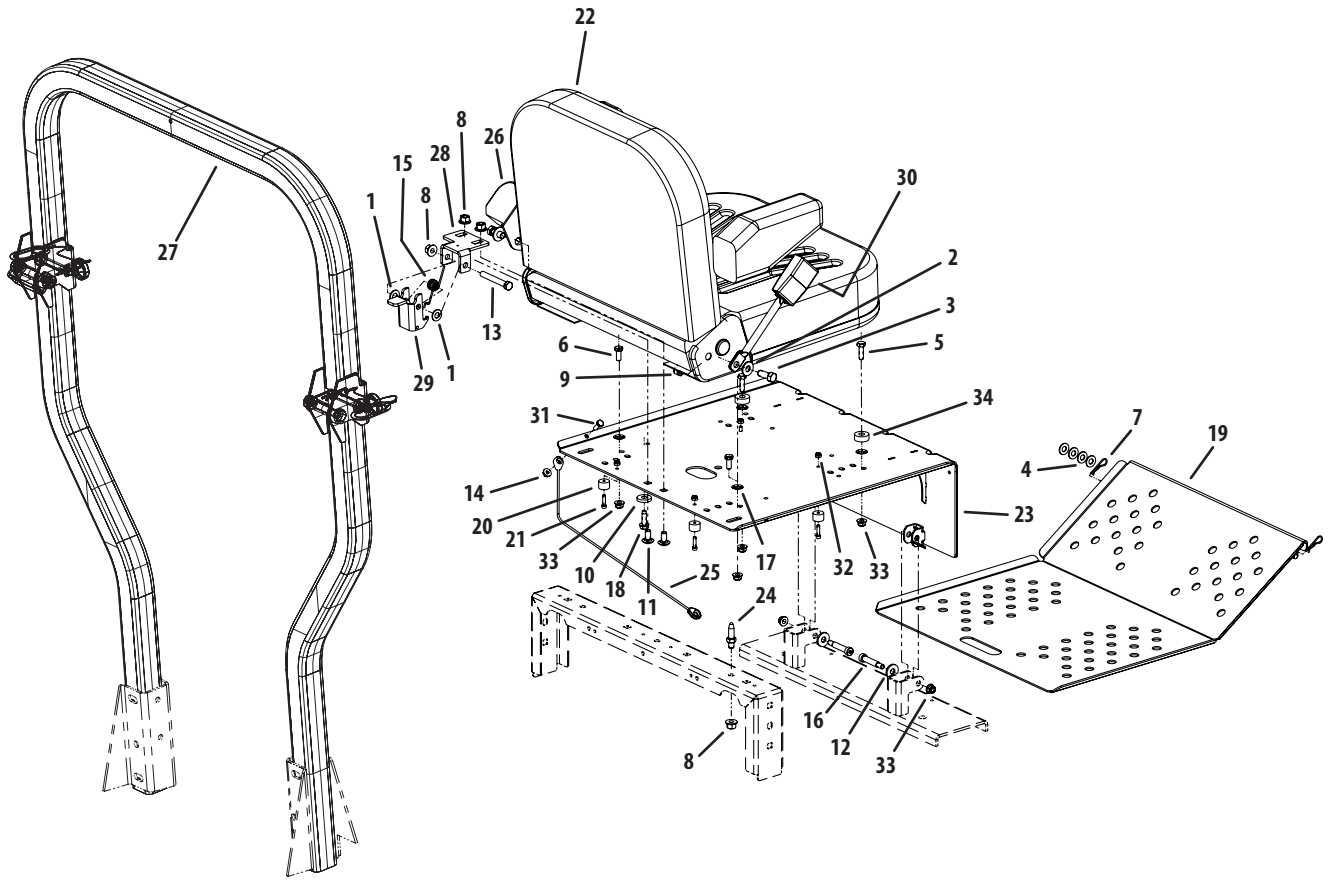

Ref.	Part Number	Description
1	00005530	Flat Washer, 3/8 Nylon
2	00006168	Flat Washer, 3/8
3	00008724	Hex Cap Screw, 7/16-14 x 1.00
4	00012158	Washer
5	00013092	Hex Head Capscrew, 5/16-18 x 1.00
6	00013406	Hex Head Capscrew, 5/16-18 x .75
7	00021956	Hair Pin, 3/8-1/2
8	00022560	Flange Lock, Hex Nut, 3/8-16
9	712-0290	Nylock Nut, 7/16-14
10	00083192	Washer, .390 ID x 1.0 OD x .180
11	710-3178	Carriage Bolt, 3/8-16 x .75 Long
12	736-3052	Flat Washer, .406 ID, 1.0 OD, .105
13	710-3022	Hex Cap Screw 3/8-16 x 2.75
14	912-3027	Lock Nut, 1/4-20
15	01008140P	Deck Lift Spring, Left Hand
16	01009459	Shoulder Bolt, .375 x 1.50
17	02000300	Push Retainer, 5/16
18	02000762	Self Tapping Screw 5/16-18 x 1.00
19	02002334	Floor Panel Assembly

Ref.	Part Number	Description
20	02002963	Rubber Stop with Washer
21	02002964	Standard Cap Screw, #10-24 x .75
22	02002976	Seat includes:
	02005335	RH & LH Armrest Kit
	02003997	Seat Switch
23	02003404	Seat Plate Assembly
24	02003745	Adjustable Stud
25	02004062P	Cable Support
26	02004907	Seatbelt
27	02005081	Foldable Rops Assembly includes:
	02004323	Knob
	02004324	Pin, Lock
28	02005147	Seat Latch Bracket
29	02005148	Seat Latch
30	02005164	Seatbelt Buckle
31	710-3015	Screw, Hex, Cap, 1/4-20 x .75
32	712-0161	Nut, #10-24, Nylon Lock
33	712-04063	Nut, 5/16-18, Flangelock
34	750-3119	Spacer .406 ID x 1.0 OD

23HP & 25HP Kohler Engine Assembly

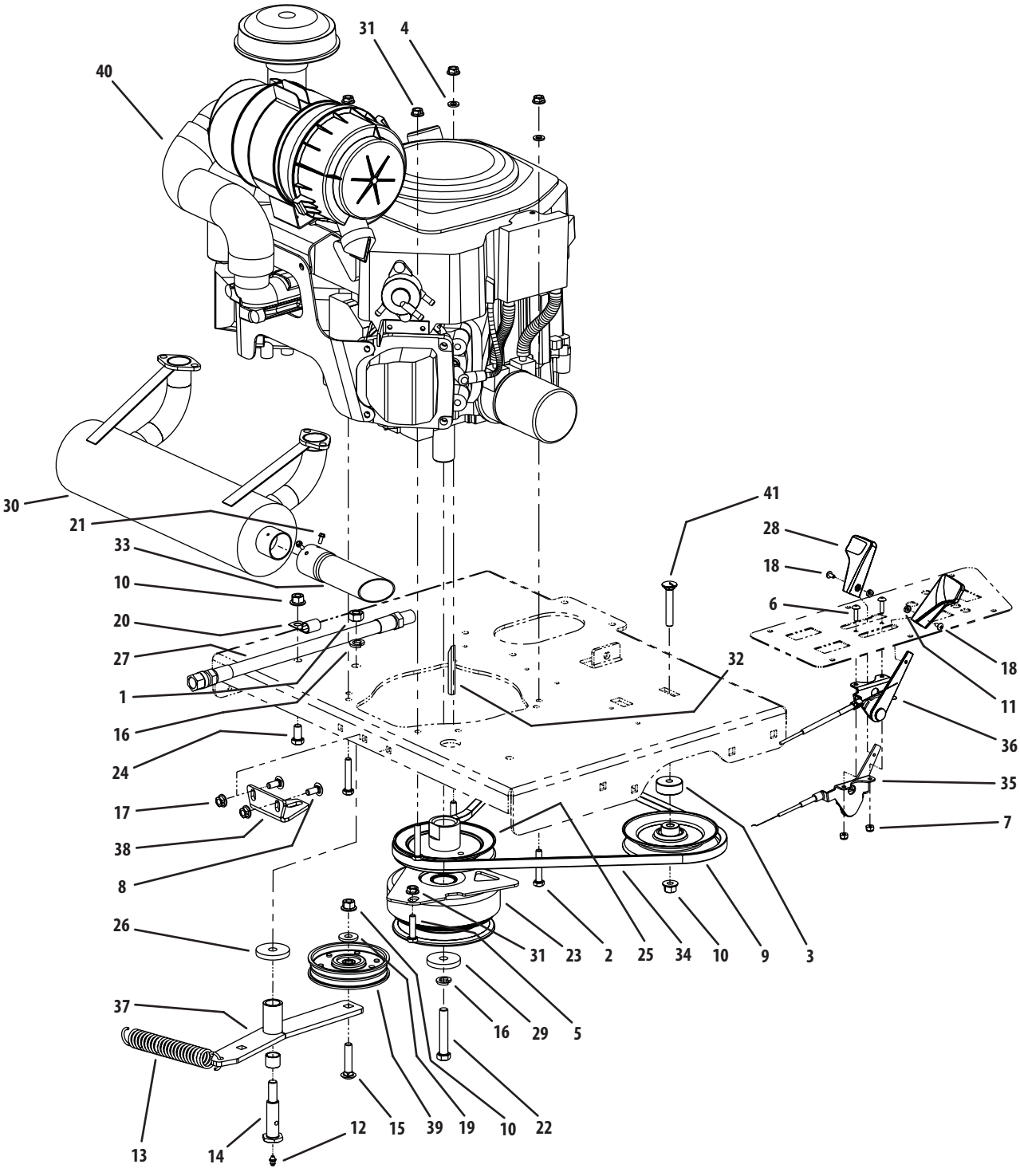

23HP & 25HP Kohler Engine Assembly

Ref.	Part Number	Description
1	912-3019	Hex Nut, 7/16-14
2	00006129	HHCS, 5/16-18, 1-3/4
3	750-05392	Spacer, .385 ID x 1.500 OD x 0.585
4	00012169	Flat Washer, .320 ID x .591 OD x .078
5	00013116	HHCS, 5/16-18 x 1-1/4
6	00030906	Machine Screw, 10-32 x 5/8
7	00014608	Lock Nut, Nylon Insert, 10-32
8	00020508	Carriage Bolt, 5/16-18 x .75
9	00021975	Idler Pulley
10	00022560	Flange Lock, Hex Nut, 3/8-16
11	00060056	Nut Washer, W/Star, 8-32
12	00060078	Grease Fitting, 1/4-28 x 3/16
13	01000199	Spring Extension, 1.0 OD x 5.00S
14	01000302	Shoulder Screw, 7/16-14
15	710-0560	Hex Carriage Screw, 3/8-16, 1.75
16	936-0171	Lock Washer, 7/16
17	712-3004A	Hexflange Lock Nut, 5/16-18
18	710-3217	Machine Screw, 8-32, .375
19	736-3052	Flat Washer, .406 ID, 1.0 OD, .105
20	726-3008	Clip, Heat Shield Cable
21	910-0224	Screw, #10-16 x 0.500
22	01001395	Capscrew, 7/16-20 x 2.50

Ref.	Part Number	Description
23	01001979P	Clutch Brake, 1.125 ID
24	710-0216	Hex Cap Screw, 3/8-16, .750
25	01002880	Pump Drive Pulley
26	01003269	Flat Washer, 7/16 ID x 1.75 OD x .25
27	01003283	Oil Drain Hose
28	731-04914	Control Throttle Knob
29	736-04131	Flat Washer, 7/16 ID x 1.75 OD x .25
30	01006566	Muffler Accessory Kohler
31	712-04063	Nut, 5/16-18, Flangelock
32	01007533	Key, 1/4 x 1/4 x 2.75
33	02005082	Exhaust Pipe
34	754-04212	Belt, 50.125 Lg
35	02003421	Throttle, Control Cable
36	02003423	Choke, Control Cable
37	02004075	Engine Idler Arm Assembly Includes:
	01000308	Bearing
38	02004926	Retainer Clutch Assembly
39	02005077	Flat Pulley with Flanges
40	02005089P	Engine, 23HP Kohler
	02004246P	Engine, 25HP Kolher
41	02005526	Carriage Bolt, 3/8-16 x 2.25

Lift Assembly

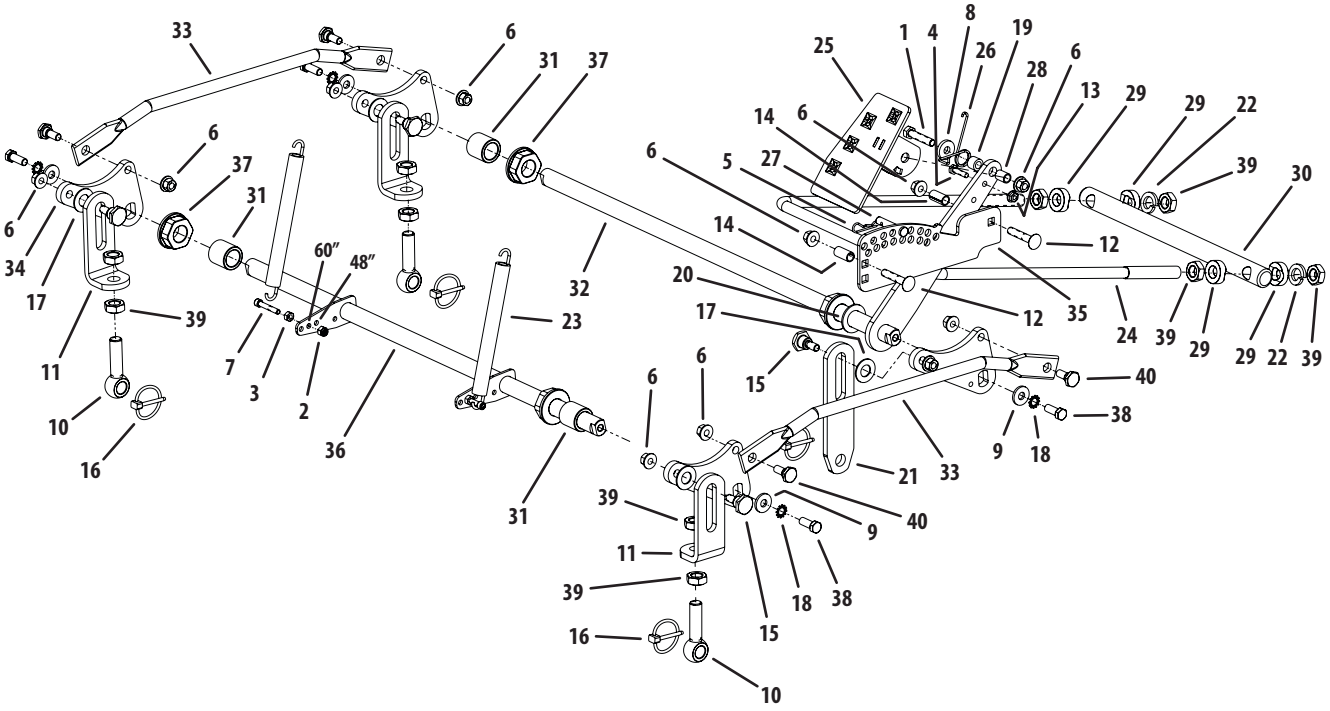

Ref.	Part Number	Description
1	00008495	Hex Cap Screw, 3/8-16 x 1-3/4
2	00012152	Lock Nut w/Nylon Insert
3	00013291	Nut, 1/4-20
4	00013416	Hex Cap Screw, 1/4-20 x 1.00
5	00021956	Hair Pin
6	00022560	Hex Nut, Flange Lock, 3/8-16
7	00031672	Cap Screw, 1/4-20 x 1-1/2
8	00083192	Idler Washer
9	736-3052	Flat Washer, .406 ID x 1.0 OD x .105
10	01001744	Eye Bolt, 5/8ID
11	01001746	Eye Bolt Mount Link, 5/8 ID
12	01002011	Hex Carriage Screw, 3/8-16, 2.00
13	912-3027	Hex Flange Lock Nut, 1/4-20
14	750-0434	Spacer, .375 ID x .50 OD x 1.02
15	01003535	Shoulder Screw, 0.625 OD x .437 Lg.
16	01003993	Linch Pin, 3/16 Dia.
17	01004003	Nylon Flat Washer, 5/8
18	01005851	External Washer, 3/8
19	01007312	Spacer, .625 OD x .385 ID x 1/2
20	01009897	Flat Washer, .890 x 1.50 x .093

Ref.	Part Number	Description
21	02000561	Deck Link
22	02000671	Lock Washer, 5/8
23	02002629	Extension Spring, 8.246 x .75 x .135
24	02002879	Front Lift Rod
25	02002880	Foot Pedal Assembly
26	02002882	Foot Lift Torsion Spring
27	02002907	Clevis Pin, .375 x 1.89 x 2.125
28	02003436	Spacer, .380 ID x .500 OD x .605
29	02003751	Spacer, .635 ID x 1.188 OD x .406
30	02004227	Trail Link Pivot Rod
31	02004409	Spacer, .889 x 1.25 x 1.25
32	02004436	Front Shaft Assembly
33	02004443	Deck Link
34	02004911	Bellcrank Lift Weldment Assembly
35	02004912	Index Plate
36	02004929	Rear Shaft Assembly
37	02004927	Flange Bearing, 1.5 Hex, 7/8 ID
38	710-0514	Hex Cap Screw, 3/8-16 x 1.00
39	912-3015	Jam Nut, 5/8-11
40	938-0380	Shoulder Screw, .50 x .27 Lg., 3/8-16

Right Hand and Left Hand Wheel Motors

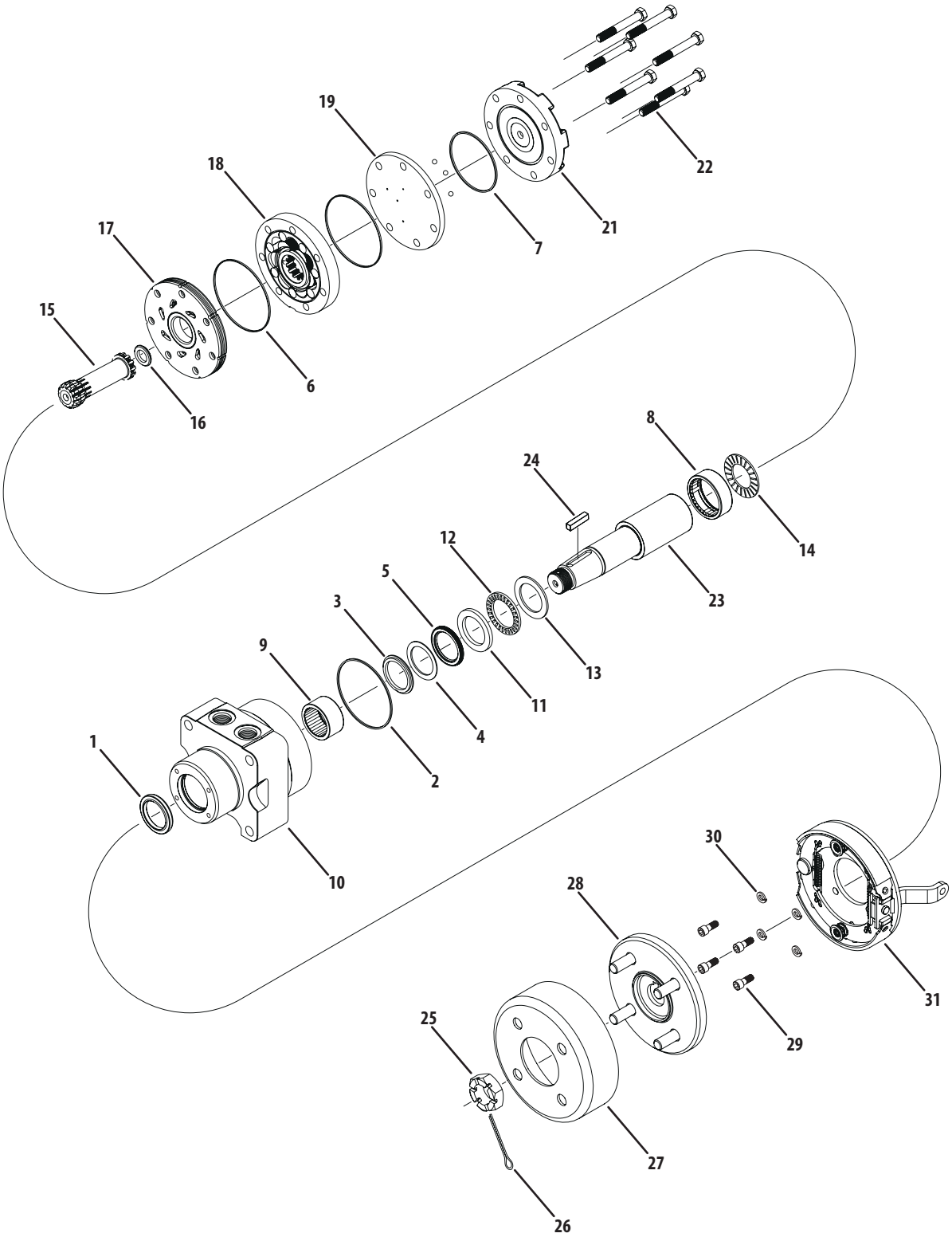

Ref.	Part Number	Description
1		Dust Seal
2		Housing Seal
3		Back Up Ring
4		Back Up Seal
5		Shaft Seal
6		Body Seals
7		Endcover Seal
8	WH-500444004	Rear Housing Bearing includes (items 1-8)
9	WH-530018000	Front Housing Bearing
10	WH-530013012	Housing
11	WH-500018283	Front Thrust Washer
12	WH-500018282	Front Thrust Bearing
13	WH-300018002	Thrust Washer
14	WH-500018059	Rear Thrust Bearing
15	WH-500014009	Drive Link
16	WH-500018185	Drive Link Spacer
17	WH-500015006	Manifold
18	WH-500147002	Rotor Set
19	WH-500012001	Balance Plate
20	WH-500018048	Steel Balls
21	WH-500016001	Endcover
22	WH-500445014	Assembly Bolts
23	WH-500011315	Shaft
24	WH-500449106	Shaft Key
25	WH-500449304	Shaft Nut
26	WH-400018015	Cotter Pin
27	WH-530018007	6" Stamped Drum
28	WH-530018005	4-Lug Knott Hub
29	WH-400180050	Mounting Bolts
30	WH-400180045	Lock Washers
31	WH-530018006	Knott Brake

Kohler CV23-75624 Crankshaft

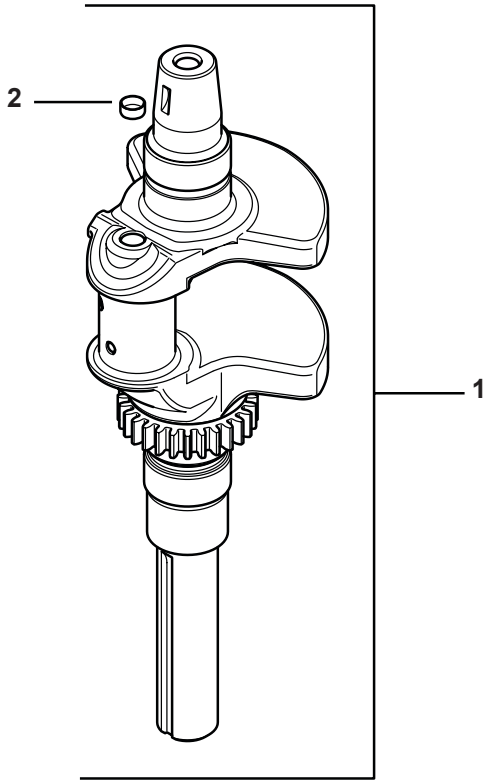

Ref.	Part Number	Description
1	KH-24-014-44	Crankshaft (Includes 2)
2	KH-52-139-09-S	Plug, Cup

Kohler CV23-75624 Oil Pan/Lubrication

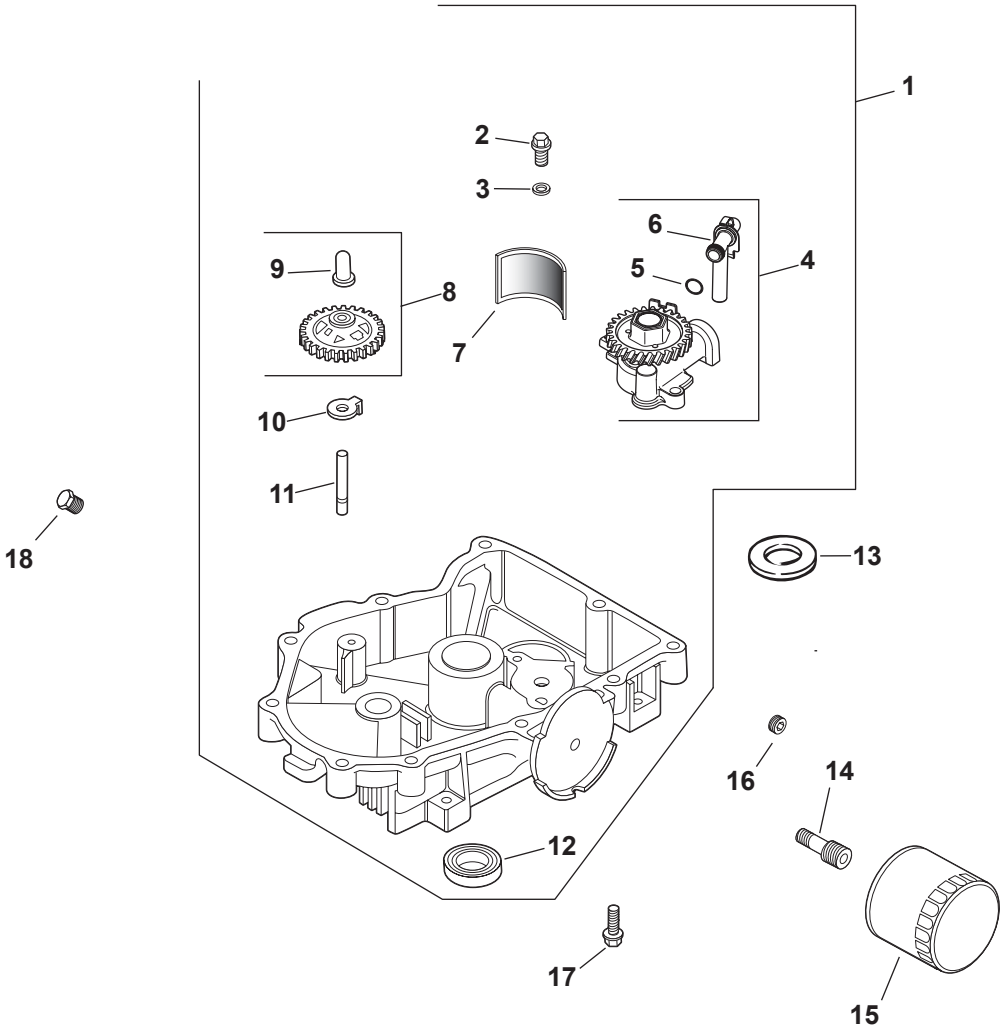

Ref.	Part Number	Description
1	KH-24-199-24-S	Pan, Oil Assembly (Includes 2-12)
2	KH-M-645025-S	Screw, SHD THD FRM M6 x 1.0 x 25
3	KH-M-631005	Washer, Flat 6MM
4	KH-24-393-51-S	Kit, Oil Pump Assembly (Includes 5, 6)
5	KH-24-153-01	O-Ring, Oil Pick-Up
6	KH-24-381-11-S	Tube, Oil Pick Up
7	KH-24-162-26-S	Screen, Oil
8	KH-24-043-12	Kit, Governor Gear w/ Pin (Includes 9)

Ref.	Part Number	Description
9	KH-12-380-01	Pin, Governor Regulating
10	KH-24-448-02-S	Tab, Locking
11	KH-12-144-02	Shaft, Governor Gear
12	KH-25-032-06-S	Seal, Oil
13	KH-24-153-08	O-Ring
14	KH-24-136-01	Nipple, Oil Filter
15	KH-12-050-01-S	Filter, Oil
16	KH-25-139-62-S	Plug, Pipe CTSK 3/8"
17	KH-24-086-17-S	Screw, Flg M8 x 1.25 x 45
18	KH-52-139-02	Plug, Hd Pipe 3/8"

Kohler CV23-75624 Crankcase

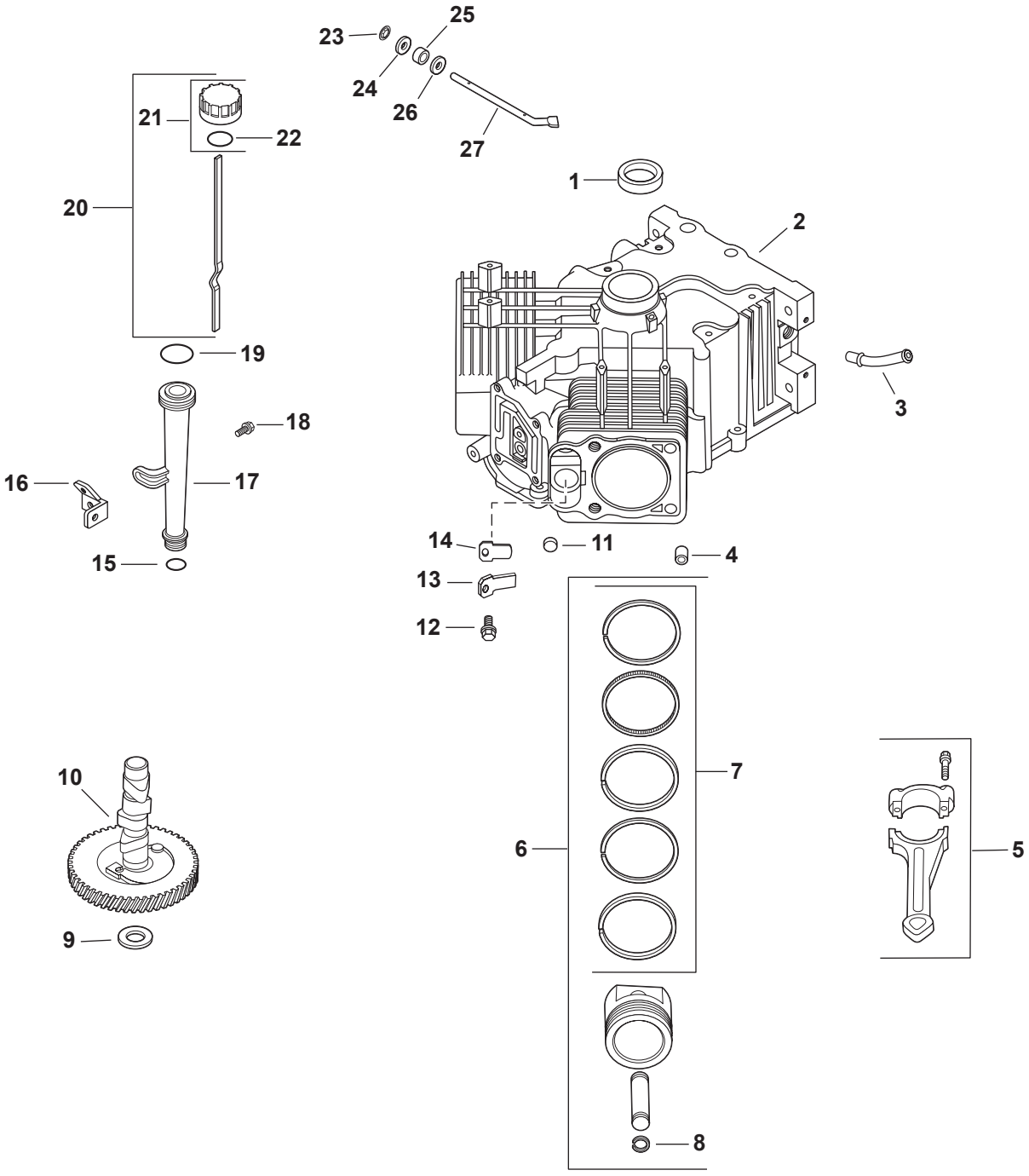

Ref.	Part-Number	Description
1	KH-24-032-19-S	Seal, Oil
2		Crankcase (use: Sortblock KH-24-522-393 or Mini Block KH-24-782-14)
3	KH-24-294-13	Fitting
4	KH-24-380-16-S	Pin, Locating
5	KH-24-067-24-S	Connecting Rod (STD)
	KH-24-067-25-S	Connecting Rod (.25)
6	KH-24-874-34-S	Kit, Piston w/ Ring (STD) (Includes 7, 8)
	KH-24-874-35-S	Kit, Piston w/ Ring (.08)
	KH-24-874-36-S	Kit, Piston w/ Ring (.25)
	KH-24-874-37-S	Kit, Piston w/ Ring (.50)
7	KH-24-108-18-S	Ring Set, Piston (STD)
	KH-24-108-19-S	Ring Set, Piston (.08)
	KH-24-108-20-S	Ring Set, Piston (.25)
	KH-24-108-21-S	Ring Set, Piston (.50)
8	KH-24-018-01-S	Retainer, Piston Pin
9	KH-12-422-09-S	Shim, Camshaft (Red .032)
	KH-12-422-13-S	Shim, Camshaft (Black .04)
	KH-12-422-07-S	Shim, Camshaft (White .028)
	KH-12-422-08-S	Shim, Camshaft (Blue .03)
	KH-12-422-10-S	Shim, Camshaft (Yellow .034)
	KH-12-422-11-S	Shim, Camshaft (Green .036)
	KH-12-422-12-S	Shim, Camshaft (Gray .038)

Ref.	Part-Number	Description
10	KH-24-012-10-S	Kit, Camshaft (Includes Lubricant)
11	KH-52-139-09-S	Plug, Cup
12	KH-M-545010	Screw, Flg Thd Frm M5x0.8x10
13	KH-24-018-04-S	Retainer, Breather Reed
14	KH-24-402-05-S	Reed, Breather
15	KH-12-153-01-S	O-Ring, Lower Oil Fill Tube
16	KH-24-126-19	Bracket, Oil Fill Tube
17	KH-12-123-35-S	Tube, Oil Fill Assembly
18	KH-M-545016-S	Screw, Flg Thd Frm M5x0.8x16
19	KH-12-153-02-S	O-Ring, Upper Oil Fill Tube
20	KH-24-038-04-S	Dipstick, Assy (Includes 21, 22)
21	KH-24-755-46	Kit, Oil Fill Cap (Includes 22)
22	KH-25-153-02-S	O-Ring, Dipstick
23	KH-24-018-09-S	Retainer Ring
24	KH-M-931010-S	Washer, Flat 9MM
25	KH-28-032-09-S	Seal, Governor Cross Shaft
26	KH-24-468-15-S	Washer, Flat 1/4" (Bottom)
27	KH-24-144-38-S	Shaft, Governor Cross
	KH-25-357-14-S	Lubricant, Camshaft (not shown)

Kohler CV23-75624 Head/Valve/Breather

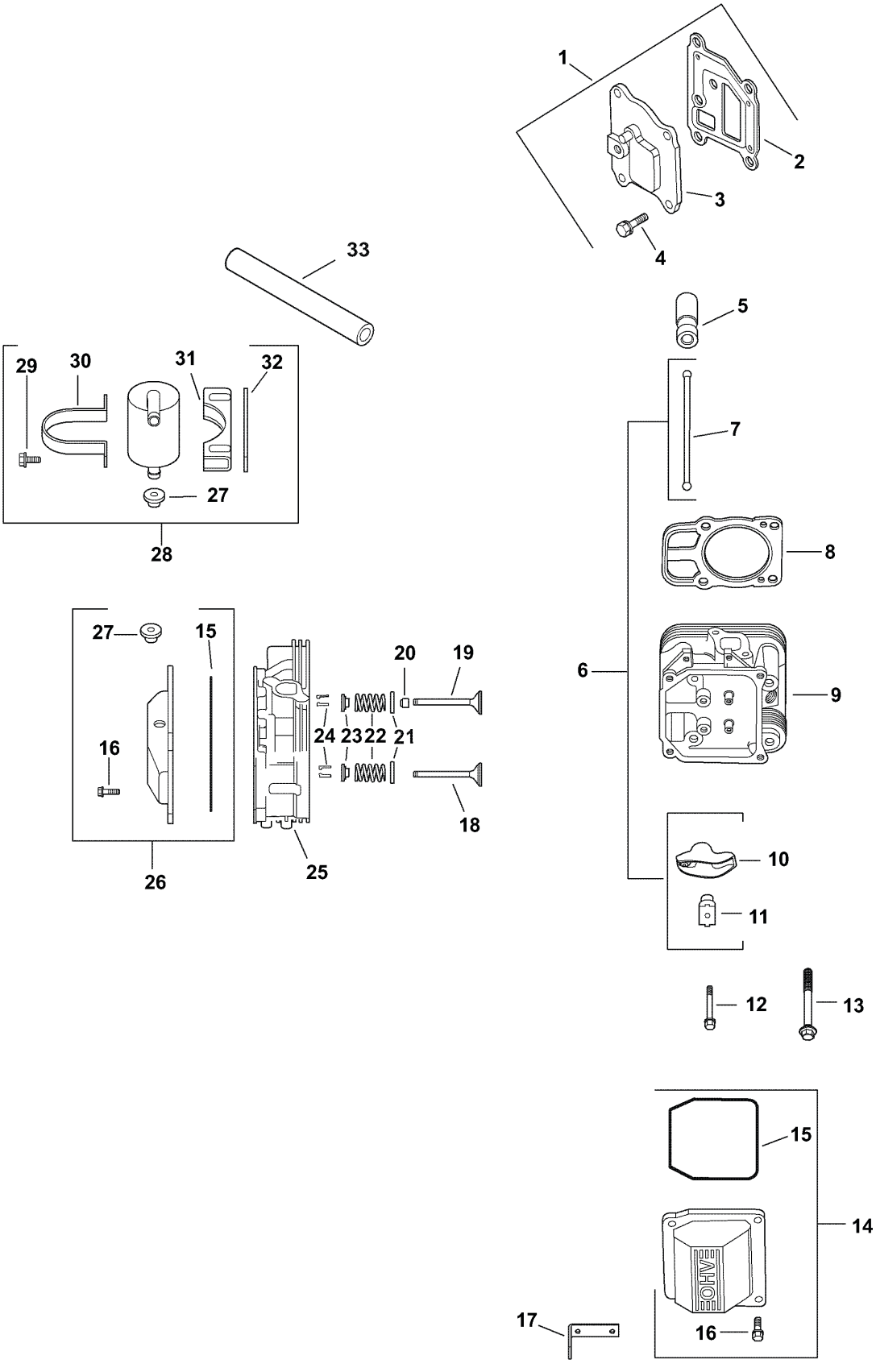

Kohler CV23-75624 Head/Valve/Breather

Ref.	Part-Number	Description
1	KH-24-033-03	KIT, BREATHER COVER W/GASKET (INCLUDES 2-4)
2	KH-24-041-51-S	GASKET, BREATHER
3	KH-24-096-87-S	COVER, BREATHER
4	KH-M-645020-S	SCREW, FLG THD FRM M6X1.0X20
5	KH-25-351-04-S	KIT, HYDRAULIC VAVLE LIFTER (INCLUDES LUBRICANT)
6	KH-24-755-66	KIT, VALVE TRAIN (INCLUDES 7, 10, 11)
7	KH-24-411-05	ROD, PUSH
8	KH-24-841-02-S	KIT, GASKET CYLINDER HEAD
9	KH-24-318-70-S	KIT, HEAD #2 (INCLUDES KH-25-072-04)
10	KH-25-186-01	ARM, ROCKER
11	KH-24-599-02-S	PIVOT, ROCKER ARM
12	KH-M-640034-S	SCREW, FLG M6X1.0X34
13	KH-12-086-16	SCREW, FLG M10X1.5X90
14	KH-24-755-141-S	KIT, VALVE COVER-PLAIN (INCLUDES 15,16)
15	KH-24-153-30-S	O-RING, VALVE COVER
16	KH-M-651030-S	SCREW, FLG M6X1.0X30
17	KH-25-445-01-S	STRAP, LIFTING
18	KH-24-016-01	VALVE, EXHAUST (STD)
	KH-24-016-02	VALVE, EXHAUST (.25)
19	KH-24-017-01	VALVE, INTAKE (STD)
	KH-24-017-02	VALVE, INTAKE (.25)
20	KH-66-032-05-S	SEAL, VALVE STEM
21	KH-235011-S	RETAINER, SPRING
22	KH-24-089-02	SPRING, VALVE
23	KH-12-173-01	CAP, VALVE SPRING
24	KH-12-755-03	KIT, RETAINER
25	KH-24-318-67-S	KIT, HEAD #1 (INCLUDES KH-25-072-04)
26	KH-24-755-142-S	KIT, VALVE COVER BREATHER (INCLUDES 15, 16, 27)
27	KH-25-313-03-S	GROMMET, RUBBER
28	KH-24-755-57-S	KIT, BREATHER SEPERATOR (INCLUDES 27, 29-32)
29	KH-M-545016-S	SCREW, FLG M5X0.80X16
30	KH-24-445-02-S	STRAP, BREATHER
31	KH-24-126-44	BRACKET, BREATHER SEPERATOR
32	KH-24-112-12	SPACER
33	KH-24-326-54-S	HOSE, BREATHER
	KH-24-755-147-S	KIT, CYLINDER HEAD HARDWARE (Not Shown) (SERVICES 1 HEAD. QUANTITIES LISTED ARE FOR BOTH HEADS) (INCLUDES 7, 10-12, 18-24)
	KH-25-357-14-S	LUBRICANT, CAMSHAFT

Kohler CV23-75624 Blower Housing & Baffles

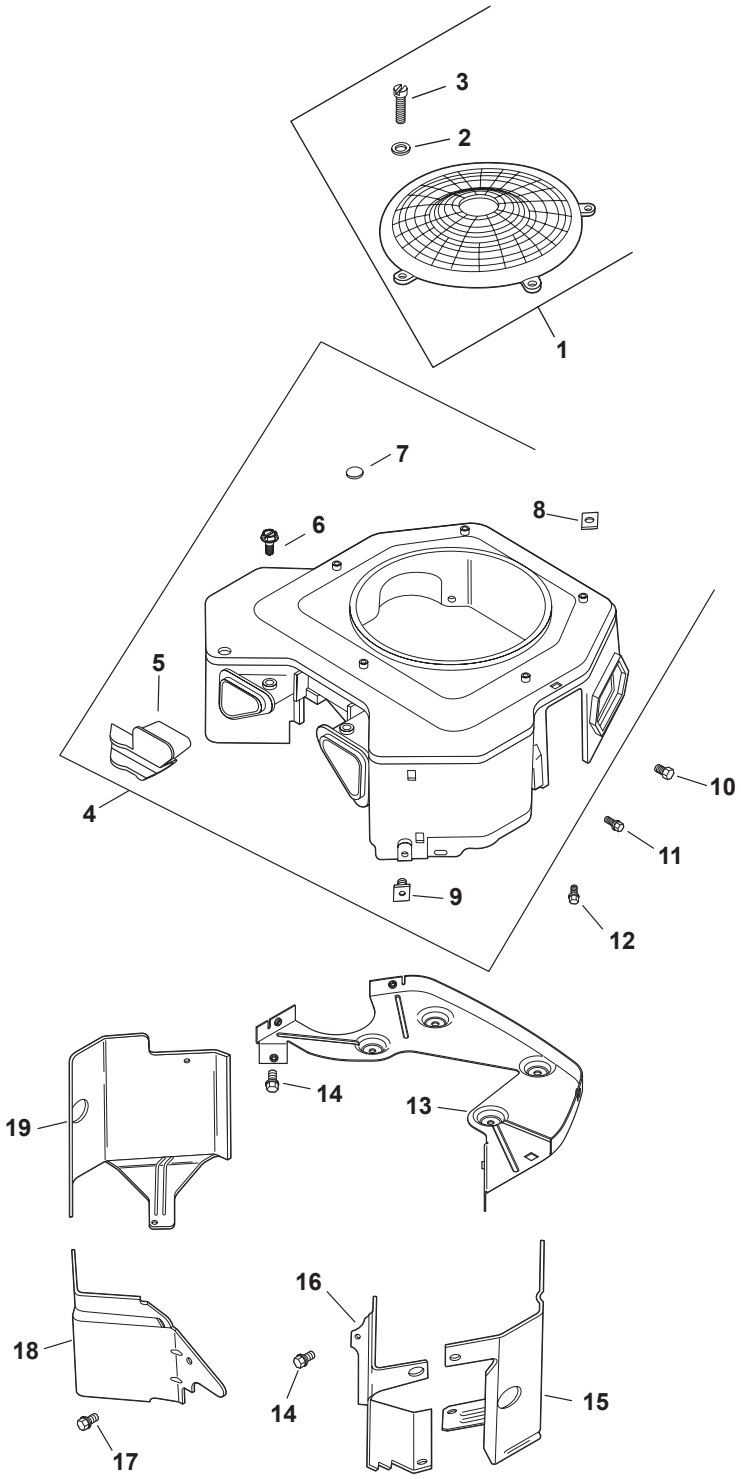

Ref.	Part-Number	Description
1	KH-24-755-81-S	Kit, Fixed Guard (Includes 2, 3, decal & insert)
2	KH-24-468-10	Washer, Flat 7/32
3	KH-24-086-35-S	Screw, LBD SCKT Pan M5x0.8x10
4	KH-24-027-196-S	Kit, Blower Housing Assembly (Includes 5-9, nameplate & insert)
5	KH-24-096-85-S	Cover, Blower Housing
6	KH-25-086-91-S	Screw, Wsh Hd Tap #8-18 x 1/2"
7	KH-25-139-16	Plug, Button 9/16
8	KH-24-100-02-S	Nut, Plastic
9	KH-24-100-01	Nut, Plastic
10	KH-M-561016-S	Screw, FLG THD FRM M5 x .8 x 16
11	KH-M-545016-S	Screw, FLG THD FRM M5 x .8 x 16
12	KH-M-545020-S	Screw, FLG THD FRM M5 x .8 x 20
13	KH-24-146-55-S	Kit, Backing Plate
14	KH-M-645016-S	Screw, FLG THD FRM M6 x 1.0 x 16
15	KH-24-063-88-S	Kit, Cyl Baffle-#2 Side
16	KH-24-063-69-S	Baffle, Valley-#2 Side
17	KH-M-545010	Screw, FLG THD FRM M5 x .8 x 10
18	KH-24-063-60-S	Baffle, Valley #1 Side
19	KH-24-063-85-S	Kit, Cyl Barrel - #1 Side
	KH-24-086-18	Screw,#11-16x7/8")not shown)
	KH-24-112-12	Spacer (not shown)
	KH-24-126-44	Bracket, Breather Seperator (not shown)
	KH-24-445-02-S	Strap,Breather (not shown)
	KH-24-332-01-S	Insert, Threaded (not shown)
	KH-25-086-160-S	Screw, Sems (not shown)
	KH-41-037-10-S	Nameplate, Service (not shown)
	KH-24-113-18-S	Decal, Grass Screen (not shown)

Kohler CV23-75624 Ignition/Electrical

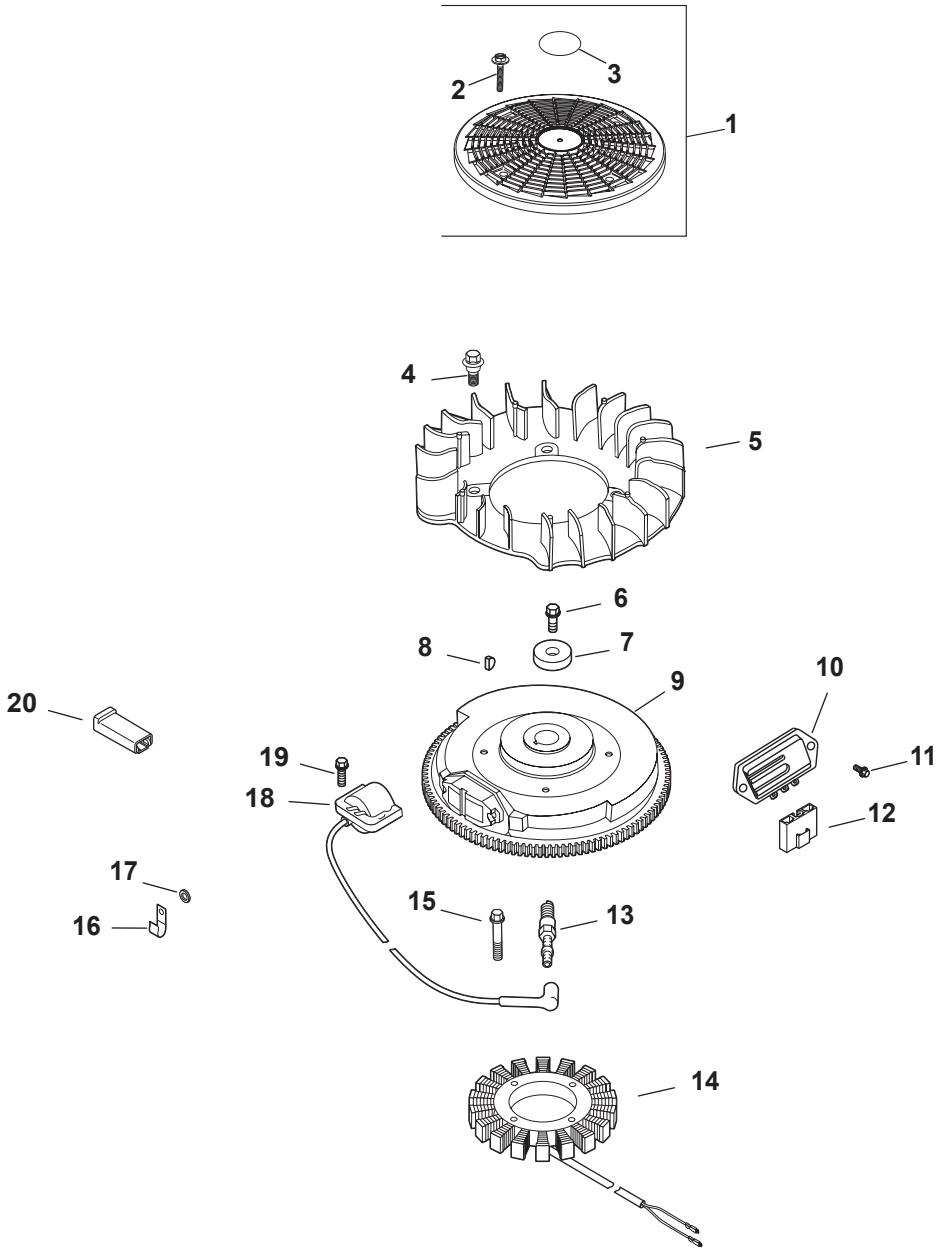

Ref.	Part Number	Description
1	KH-54-755-15	Kit, Grass Screen (Includes 2, 3)
2	KH-25-086-117-S	Screw, Flg Sems M4 x 0.7 x 25
3	KH-24-113-18-S	Decal, Grass Screen
4	KH-25-086-47	Bolt, Shoulder
5	KH-24-157-12-S	Fan
6	KH-12-086-14	Screw, FLG M10X1.5X45
7	KH-12-468-03	Washer, Flat 13/32"
8	KH-X-42-15	Key, 3/16" x 5/8"
9	KH-24-025-55-S	Flywheel
10	KH-41-403-09	Rectifier-Regulator
11	KH-25-086-157-S	Screw, Hex Flange Hi-Lo
12	KH-236602-S	Connector (3 Contact)
13	KH-12-132-02	Plug, Spark
14	KH-237878	Kit, 15 Amp Stator (Includes KH-25 452 01-S)
15	KH-M-548025-S	Screw, THD FRM M5 x 0.8 x 25
16	KH-235173	Clip, Cable
17	KH-X-25-63	Washer, Flat, 1/4"
18	KH-24-584-45-S	Kit, Module, Ignition (CDI Fixed)
19	KH-M-545020-S	Screw, FLG THD FRM M5 x 0.8 x 20
20	KH-277563	Connector (1 Contact)
	KH-24-126-137-S	Bracket, Ground Strap (not shown)
	KH-24-176-112-S	Harness, Wiring (not shown)
	KH-24-176-41	Lead, Duplex (not shown)
	KH-25-454-07-S	Tie (not shown)
	KH-25-518-34-S	Lead (not shown)
	KH-25-452-01-S	Terminal (not shown)

Kohler CV23-75624 Starting System

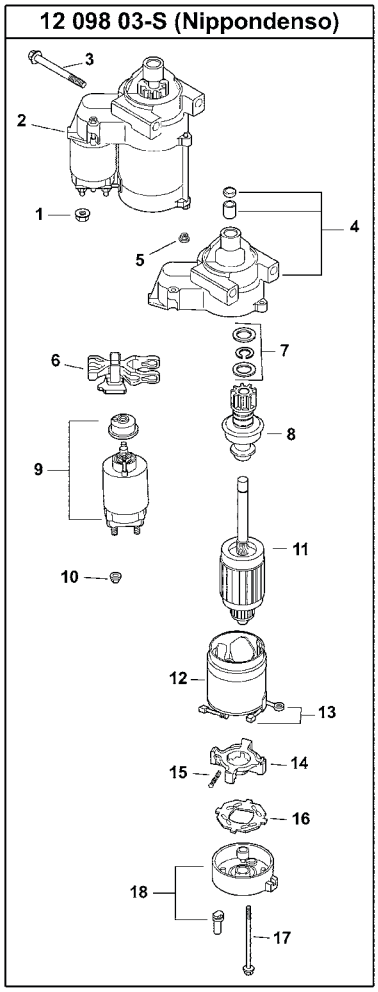

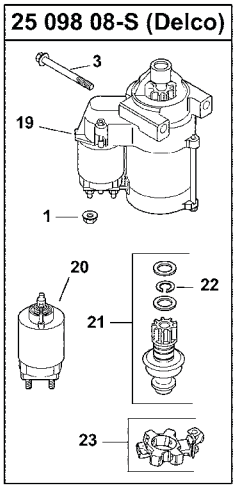

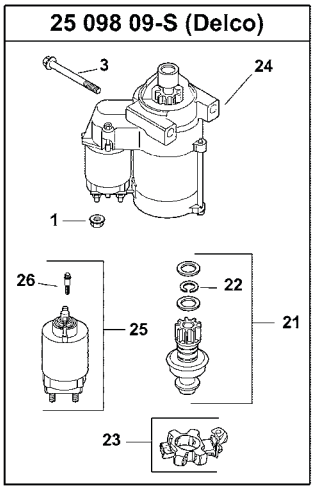

Ref.	Part-Number	Description
1	KH-M-841080	Nut, Flg M8 x 1.25
2	KH-25-098-09-S	Starter Assembly, Solenoid Shift
3	KH-M-839080	Screw, FLG M8 x 1.25 x 80
4	KH-12-081-02-S	Drive, End Cap
5	KH-52-100-10	Nut
6	KH-12-090-10	Lever, Drive
7	KH-24-755-84	Kit, Starter Repair
8	KH-12-239-01	Drive Pinion
9	KH-52-435-02	Solenoid
10	KH-52-100-09	Nut
11	KH-12-170-03	Armature
12	KH-12-471-01	Frame w/Brushes
13	KH-52-221-01	Brush & Spring Kit (Includes 15)
14	KH-52-323-03	Brush Holder

Ref.	Part-Number	Description
15	KH-52-089-09	Spring, Brush
16	KH-52-168-01	Insulator
17	KH-52-211-05	Thru Bolt
18	KH-12-301-01	Commutator, End Cap
19	KH-25-098-08-S	Starter Assy, Solenoid Shift
20	KH-25-435-04-S	Solenoid
21	KH-25-755-33-S	Kit, Starter Pinion (Includes 22)
22	KH-25-141-05-S	Ring, Retaining
23	KH-25-221-01-S	Kit, Brush Holder
24	KH-25-098-09-S	Starter Assy, Solenoid Shift (Includes 21-23, 25, 26)
25	KH-25-435-06-S	Kit, Solenoid (Includes 26)
26	KH-25-086-113-S	Screw, External Torx Head

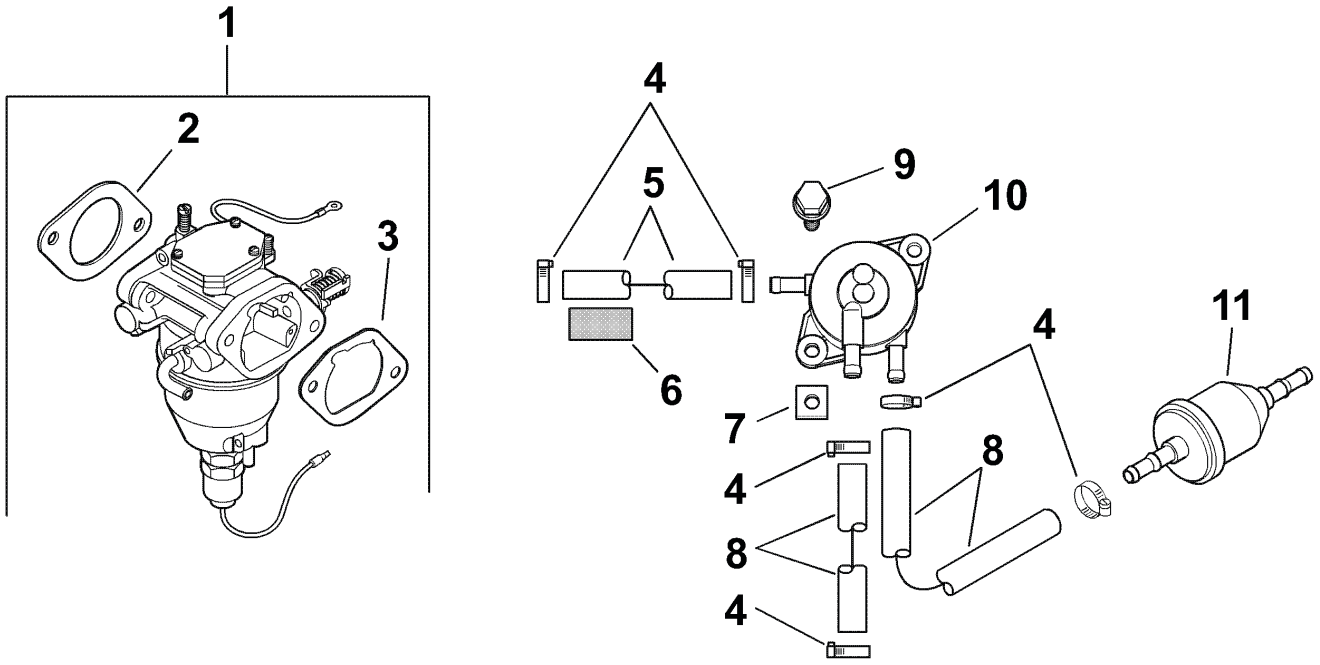

Ref.	Part-Number	Description
1	KH-24-853-108-S	KIT, CARBURETOR W/GASKETS (Includes 2, 3)
2	KH-24-041-15	GASKET, CARBURETOR
3	KH-24-041-14	GASKET, AIR CLEANER BASE
4	KH-25-237-14-S	CLAMP, SPRING HOSE 1/2"
5	KH-24-353-12	LINE, FUEL 11"
6	KH-24-431-02-S	SLEEVE, INSULATING 14"
7	KH-25-100-37-S	NUT, PLASTIC-BLACK
8	KH-25-111-34-S	LINE, FUEL (24"-CUT TO LENGTH)

Ref.	Part-Number	Description
9	KH-24-086-12	SCREW, TAP M6X1.7X18
10	KH-24-393-16	PUMP, FUEL
11	KH-24-050-13-S	FILTER, FUEL
	KH-24-757-36-S	KIT, REPAIR SERVICE CHOKE
	KH-24-757-38-S	KIT, REPAIR SERVICE GASKET
	KH-24-757-44-S	KIT, REPAIR FLOAT
	KH-24-757-45-S	KIT, REPAIR SOLENOID VALVE
	KH-24-757-46-S	KIT, REPAIR OVERHAUL
	KH-24-757-56-S	KIT, ACCELERATOR PUMP

Kohler CV23-75624 Air Intake/Filtration

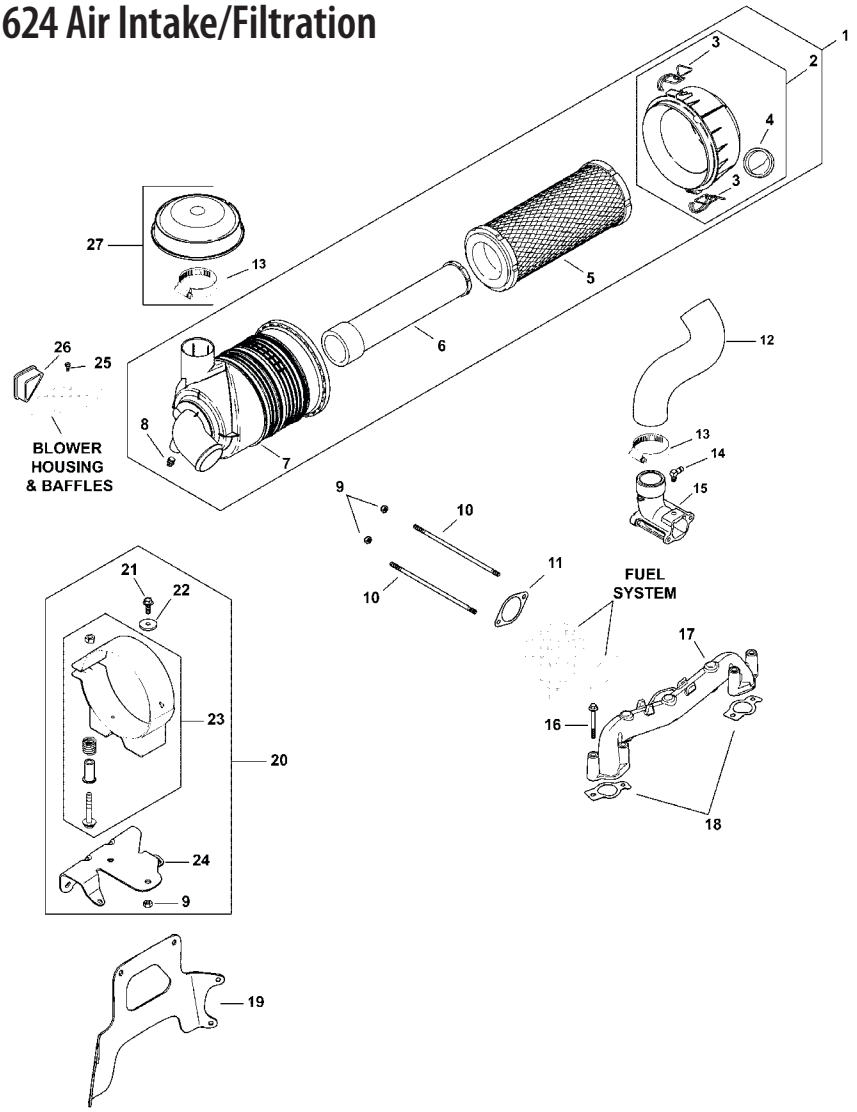

Ref.	Part-Number	Description
1	KH-25-048-11-S	Cleaner, Air-Canister (Includes 2-8)
2	KH-25-096-06-S	Cover Assembly, Air Cleaner (Includes 3, 4)
3	KH-25-154-05-S	Clip
4	KH-24-462-07-S	Valve, Dust Ejector
5	KH-25-083-01-S	Element, Air Filter-Primary
6	KH-25-083-04-S	Element, Air Filter-Safety
7	KH-25-081-01-S	Housing, HD Air Cleaner
8	KH-25-139-20-S	Plug, Pipe
9	KH-M-647060	Nut, Lock M6 x 1.0
10	KH-24-072-10-S	Stud, M6x1.0x180
11	KH-24-041-14	Gasket, Air Cleaner Base
12	KH-24-326-72-S	Hose, Air Cleaner
13	KH-25-237-21-S	Hose Clamp
14	KH-25-155-38-S	Connector, Hose

Ref.	Part-Number	Description
15	KH-24-054-16-S	Elbow, Air Cleaner
16	KH-25-086-84-S	Screw, Flg M6x1.0x55
17	KH-24-164-06	Manifold, Intake
18	KH-24-041-01	Gasket, Intake Manifold
19	KH-24-126-105-S	Bracket, Main Support
20	KH-24-126-166-S	Bracket, Air Cleaner Sub Assy (Includes 9, 21-24)
21	KH-M-639016-S	Screw, Flg M6x1.0x16
22	KH-X-25-73-S	Washer, Flat 1/4"
23	KH-25-126-02-S	Bracket Assy, Air Cleaner
24	KH-24-126-165-S	Bracket, Air Cleaner Mounting
25	KH-25-086-91-S	Screw, Wsh Hd Tap #8-18x1/2"
26	KH-24-096-17-S	Cover, Blower Housing
27	KH-25-324-02-S	Hood, Air Cleaner (Includes 13)
	KH-25-454-04-S	Tie

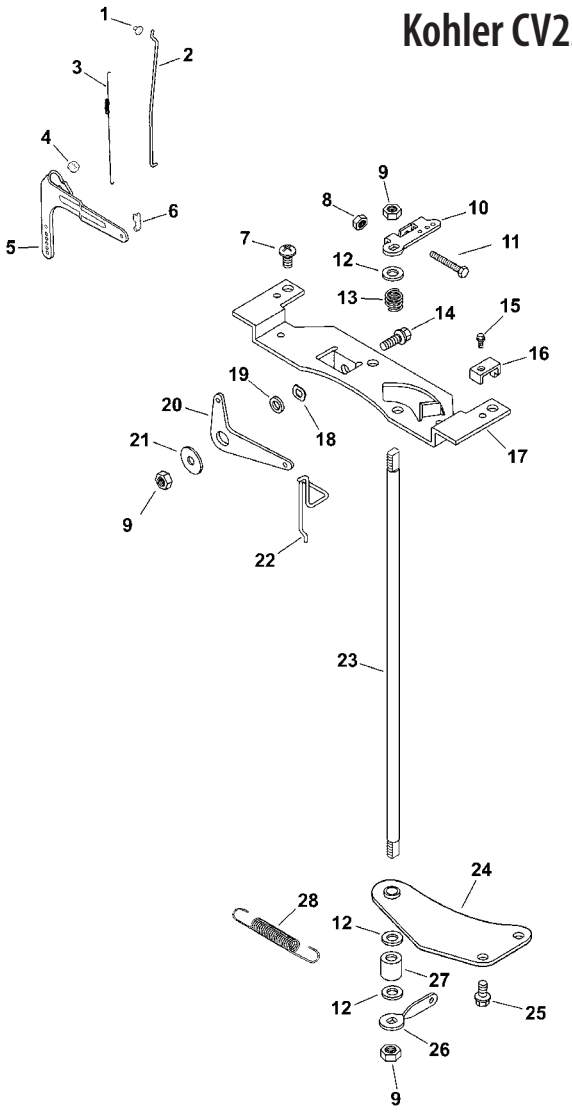

Ref.	Part-Number	Description
1	KH-25-158-08	Bushing, Lingage Retaining
2	KH-24-079-04	Linkage, Throttle
3	KH-24-089-01	Spring, Linkage
4	KH-M-641060-S	Nut, FLG M6 x 1.0
5	KH-24-090-51-S	Lever, Governor
6	KH-25-158-11	Bushing, Throttle Linkage
7	KH-24-086-06	Screw, Phl Hd 11-16 x 3/4"
8	KH-M-446030-S	Nut, M4 x 0.7
9	KH-M-647060	Nut, Lock M6 x 1.0
10	KH-24-090-09	Lever, Throttle Control
11	KH-M-401030	Screw, Cap M4 x 0.7 x 30
12	KH-X-25-72	Washer, Flat 1/4"
13	KH-24-089-20	Spring, Throttle Shaft
14	KH-M-639016-S	Screw, Flg M6x1.0x16
15	KH-M-545016-S	Screw, Flg Thd Frm M5 x 0.8 x 16

Ref.	Part-Number	Description
16	KH-12-237-01	Clamp, Cable
17	KH-24-126-111-S	Bracket, Control
18	KH-277341	Washer, Spring 3/8"
19	KH-25-431-01-S	Spacer
20	KH-24-090-20	Lever, Choke
21	KH-X-25-52	Washer, Flat 1/4"
22	KH-24-079-10	Linkage, Choke
23	KH-24-144-11	Shaft, Throttle
24	KH-24-126-162-S	Bracket, Throttle Shaft
25	KH-M-645016-S	Screw, Flg Thd Frm M6 x 1.0 x16
26	KH-24-090-12	Lever, Throttle Control
27	KH-24-112-10	Spacer
28	KH-24-089-46-S	Spring, Governor
	KH-24-211-03-S	Bolt, Rd Hd Sq Neck M6x1.0x25

Kohler CV23-75624 Exhaust

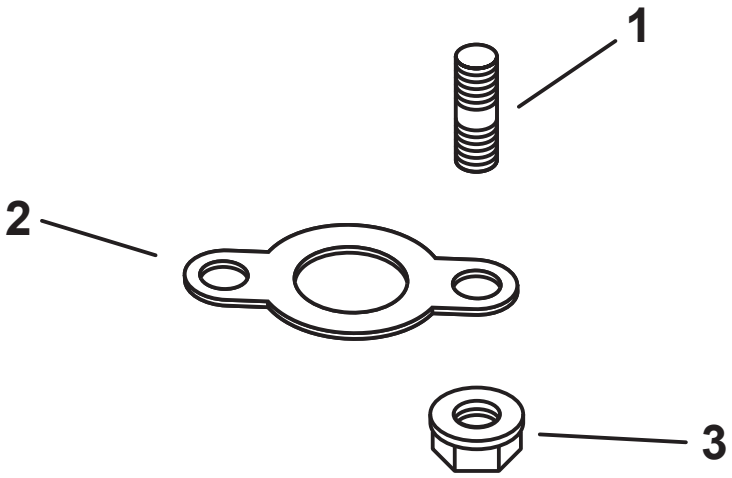

Ref.	Part Number	Description
1	KH-25-072-14-S	Stud, M8 x 1.25 x 33
2	KH-24-041-49-S	Gasket, Exhaust
3	KH-M-841080	Nut, Flg M8 x 1.25

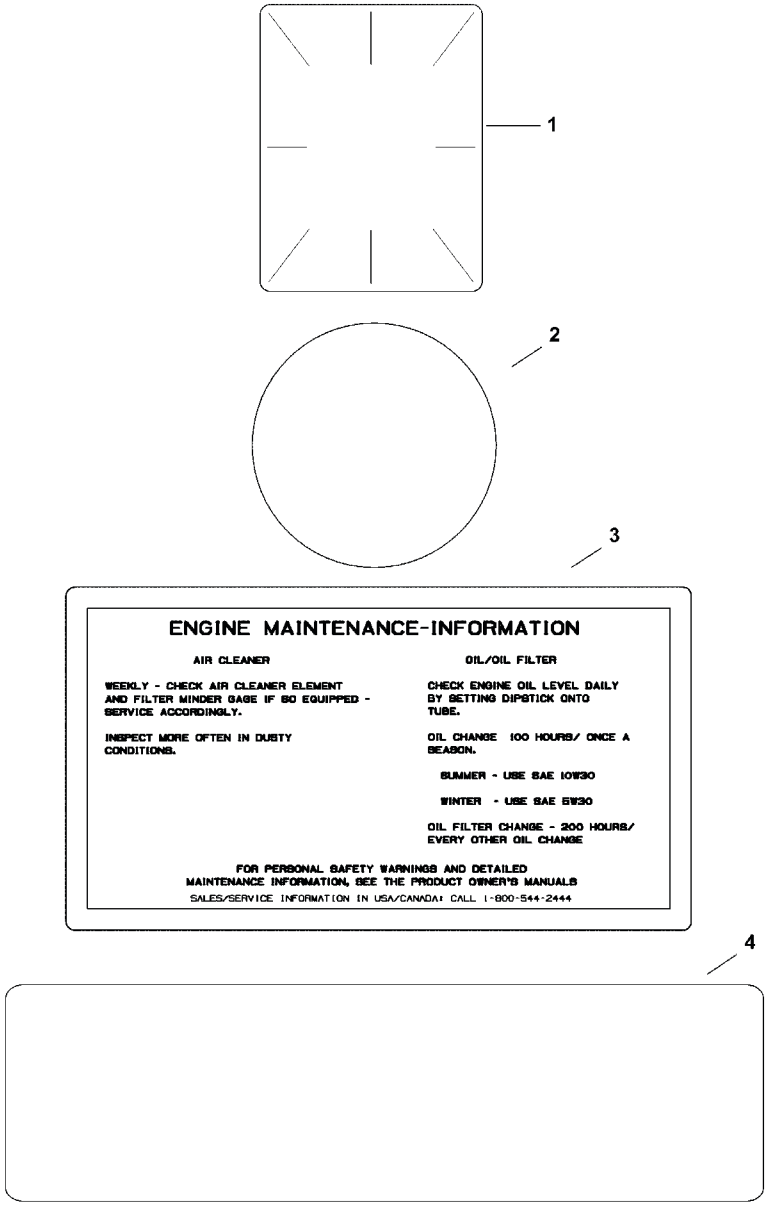

Ref.	Part Number	Description
1	KH-25-113-39-S	Decal, Clear Laminate
2	KH-24-113-18-S	Decal, Grass Screen
3	KH-25-113-27-S	Decal, Air Cleaner
4	KH-24-113-81-S	Decal, Command 23HP

Kohler CV730-0055 Crankshaft

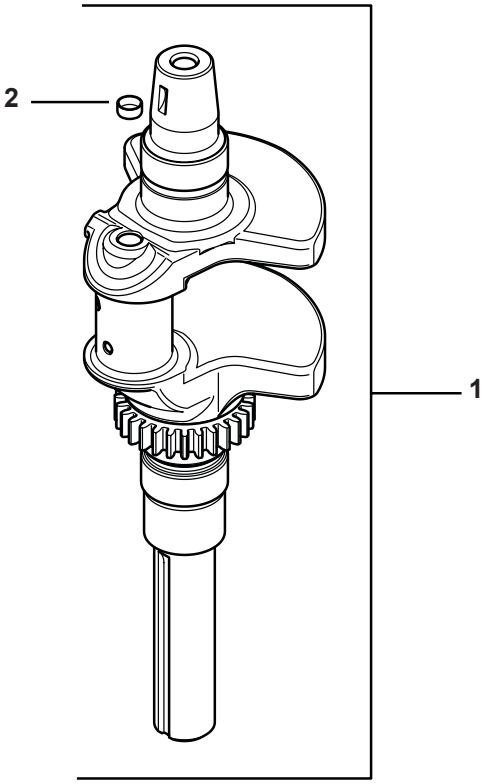

Ref.	Part Number	Description
1	KH-24-014-44-S	Crankshaft (Includes 2)
2	KH-52-139-09-S	Plug, Cup

Kohler CV730-0055 Oil Pan/Lubrication

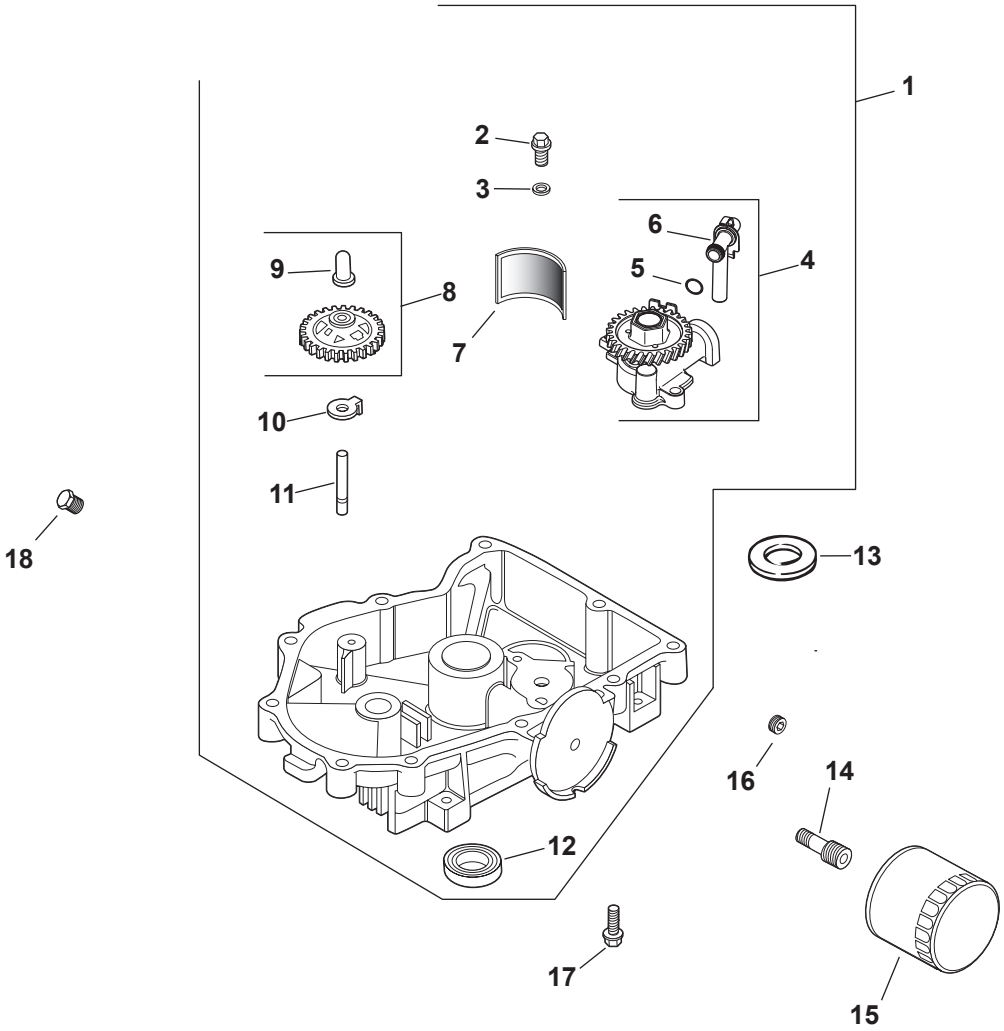

Ref.	Part Number	Description
1	KH-24-199-24-S	Pan, Oil Assembly (Includes 2-12)
2	KH-M-645025-S	Screw, SHD THD FRM M6 x 1.0 x 25
3	KH-M-631005	Washer, Flat 6MM
4	KH-24-393-51-S	Kit, Oil Pump Assembly (Includes 5, 6)
5	KH-24-153-01	O-Ring, Oil Pick-Up
6	KH-24-381-11-S	Tube, Oil Pick Up
7	KH-24-162-26-S	Screen, Oil
8	KH-24-043-12	Kit, Governor Gear w/ Pin (Includes 9)

Ref.	Part Number	Description
9	KH-12-380-01	Pin, Governor Regulating
10	KH-24-448-02-S	Tab, Locking
11	KH-12-144-02	Shaft, Governor Gear
12	KH-25-032-06-S	Seal, Oil
13	KH-24-153-08	O-Ring
14	KH-24-136-01	Nipple, Oil Filter
15	KH-12-050-01-S	Filter, Oil
16	KH-25-139-62-S	Plug, Pipe CTSK 3/8"
17	KH-24-086-17-S	Screw, Flg M8 x 1.25 x 45
18	KH-52-139-02	Plug, Hd Pipe 3/8"

Kohler CV730-0055 Crankcase

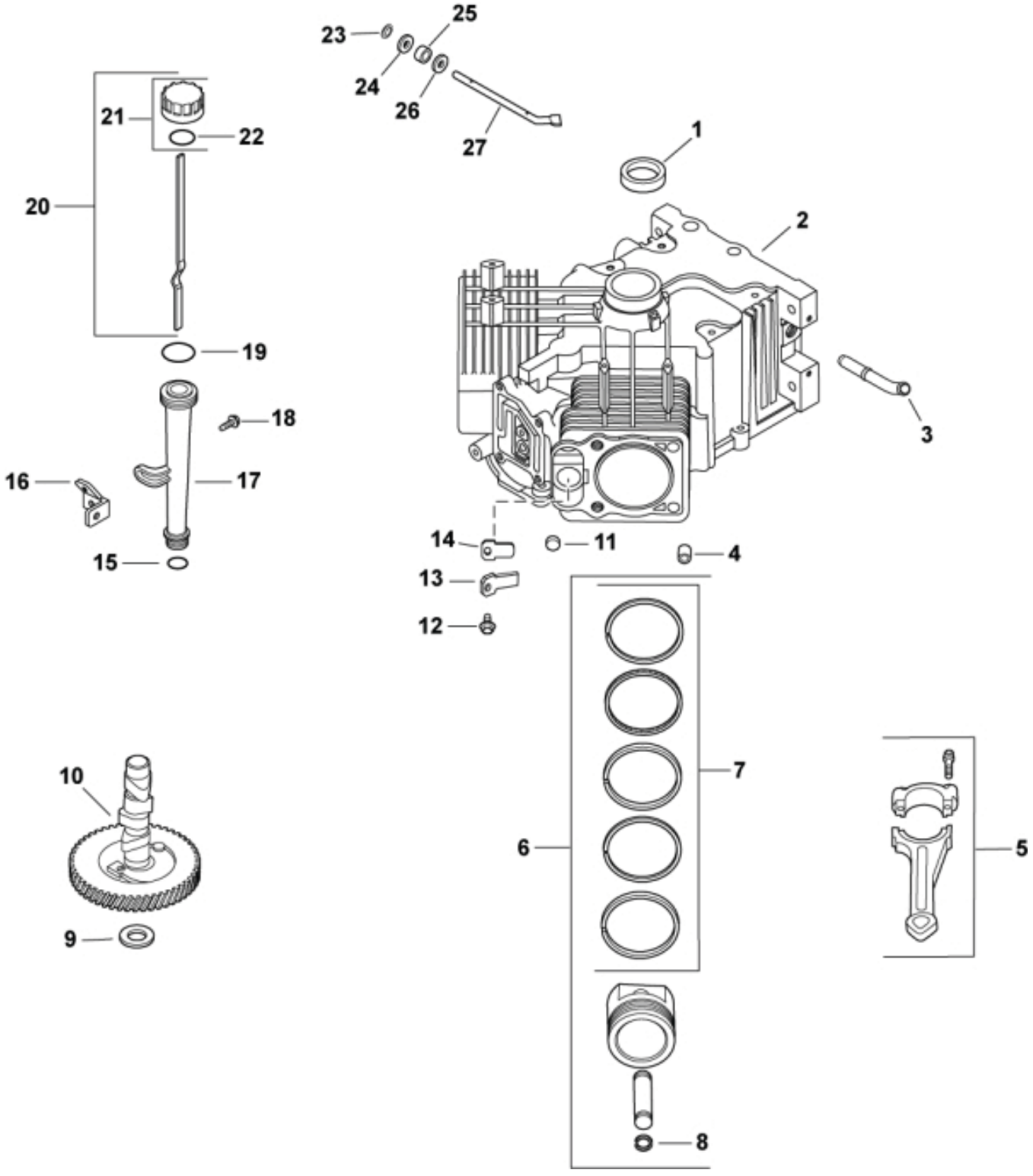

Ref.	Part-Number	Description
1	KH-24-032-01-S	Seal, Oil
2		Crankcase (use: Sortblock KH-24-522-393 or Mini Block KH-24-782-14)
3	KH-24-294-13	Fitting
4	KH-24-380-16-S	Pin, Locating
5	KH-24-067-24-S	Connecting Rod
	KH-24-067-17-S	Connecting Rod
6	KH-24-874-26-S	Kit, Piston w/ Ring (STD) (Includes 7, 8)
	KH-24-874-27-S	Kit, Piston w/ Ring
	KH-24-874-20-S	Kit, Piston w/ Ring (.25)
	KH-24-874-29-S	Kit, Piston w/ Ring
7	KH-24-108-15-S	Ring Set, Piston
	KH-24-108-16-S	Ring Set, Piston
	KH-24-108-07-S	Ring Set, Piston (.50)
8	KH-24-018-01-S	Retainer, Piston Pin
9	KH-12-422-07-S	Shim, Camshaft (White .028)
	KH-12-422-08-S	Shim, Camshaft (Blue .03)
	KH-12-422-09-S	Shim, Camshaft (Red .032)
	KH-12-422-10-S	Shim, Camshaft (Yellow .034)
	KH-12-422-11-S	Shim, Camshaft (Green .036)
	KH-12-422-12-S	Shim, Camshaft (Gray .038)
	KH-12-422-13-S	Shim, Camshaft (Black .04)

Ref.	Part-Number	Description
10	KH-24-012-16-S	Kit, Camshaft (Includes Lubricant)
11	KH-52-139-09-S	Plug, Cup
12	KH-M-545010	Screw, Flg Thd Frm M5x0.8x10
13	KH-24-018-04-S	Retainer, Breather Reed
14	KH-24-402-05-S	Reed, Breather
15	KH-12-153-01-S	O-Ring, Lower Oil Fill Tube
16	KH-24-126-19	Bracket, Oil Fill Tube
17	KH-12-123-35-S	Tube, Oil Fill Assembly
18	KH-M-545016-S	Screw, Flg Thd Frm M5x0.8x16
19	KH-12-153-02-S	O-Ring, Upper Oil Fill Tube
20	KH-24-038-04-S	Dipstick, Assy (Includes 21, 22)
21	KH-24-755-46	Kit, Oil Fill Cap (Includes 22)
22	KH-25-153-02-S	O-Ring, Dipstick
23	KH-24-018-09-S	Retainer Ring
24	KH-M-931010-S	Washer, Flat 9MM
25	KH-28-032-09-S	Seal, Governor Cross Shaft
26	KH-24-468-15-S	Washer, Flat 1/4" (Bottom)
27	KH-24-144-38-S	Shaft, Governor Cross
	KH-25-357-14-S	Lubricant, Camshaft (not shown)

Kohler CV730-0055 Blower Housing & Baffles

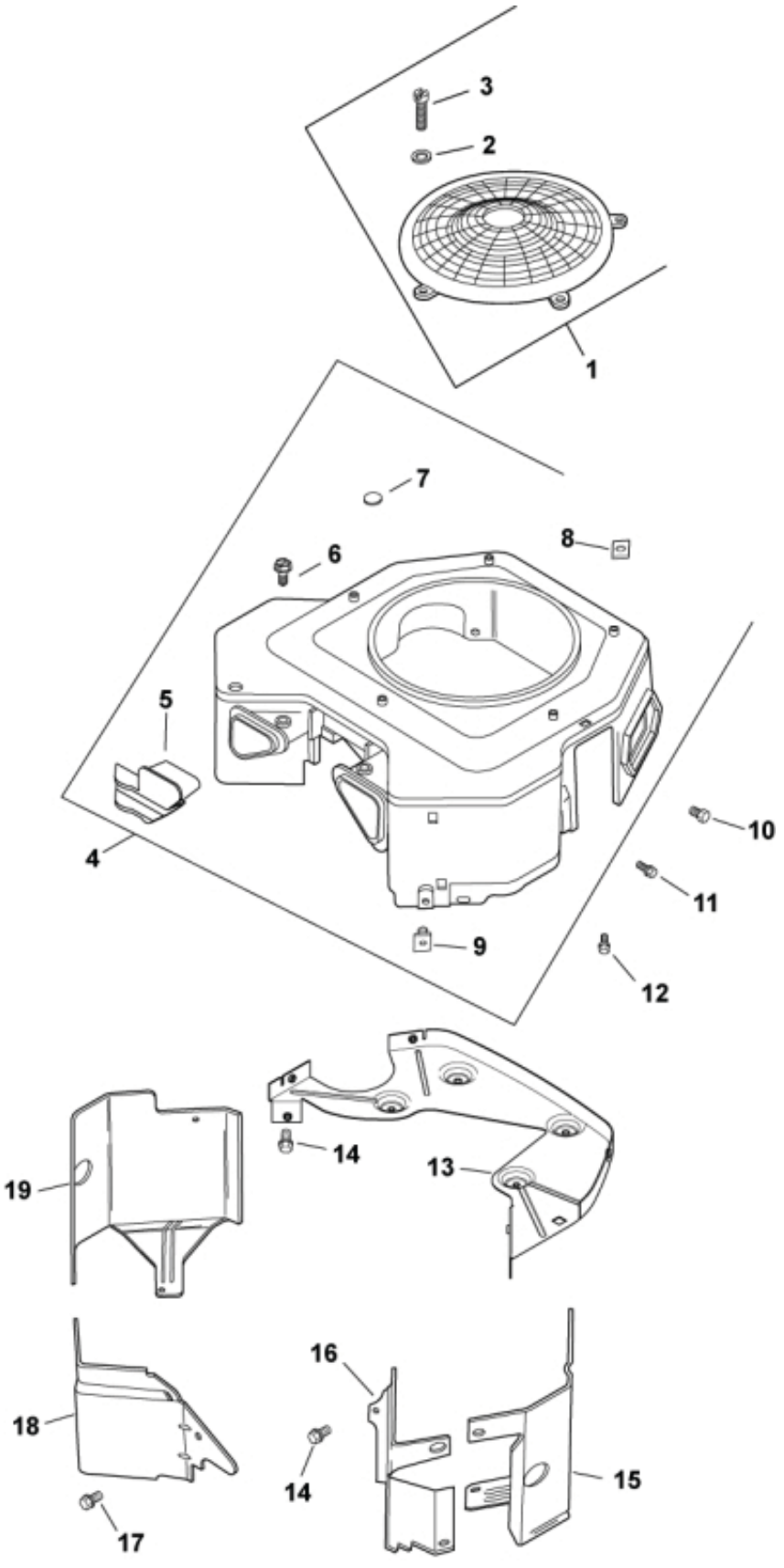

Ref.	Part-Number	Description
1	KH-24-755-81-S	Kit, Fixed Guard (Includes 2, 3, decal & insert)
2	KH-24-468-10	Washer, Flat 7/32
3	KH-24-086-35-S	Screw, LBD SCKT Pan M5x0.8x10
4	KH-24-027-197	Kit, Blower Housing Assembly (Includes 5-9, & insert)
5	KH-24-096-85-S	Cover, Blower Housing
6	KH-25-086-91-S	Screw, Wsh Hd Tap #8-18 x 1/2"
7	KH-25-139-16	Plug, Button 9/16
8	KH-24-100-02-S	Nut, Plastic
9	KH-24-100-01	Nut, Plastic
10	KH-M-561016-S	Screw, FLG THD FRM M5 x .8 x 16
11	KH-M-545016-S	Screw, FLG THD FRM M5 x .8 x 16
12	KH-M-545020-S	Screw, FLG THD FRM M5 x .8 x 20
13	KH-24-146-55-S	Kit, Backing Plate
14	KH-M-645016-S	Screw, FLG THD FRM M6 x 1.0 x 16
15	KH-24-063-76-S	Kit, Cyl Baffle-#2 Side
16	KH-24-063-69-S	Baffle, Valley-#2 Side
17	KH-M-545010	Screw, FLG THD FRM M5 x .8 x 10
18	KH-24-063-60-S	Baffle, Valley #1 Side
19	KH-24-063-81-S	Kit, Cyl Baffle - #1 Side
	KH-25-154-11-S	Clip, Repair (Speed Nut)
	KH-24-332-01-S	Insert, Threaded (not shown)
	KH-41-037-10-S	Nameplate, Service (not shown)
	KH-24-113-18-S	Decal, Grass Screen (not shown)

Kohler CV730-0055 Ignition/Electrical

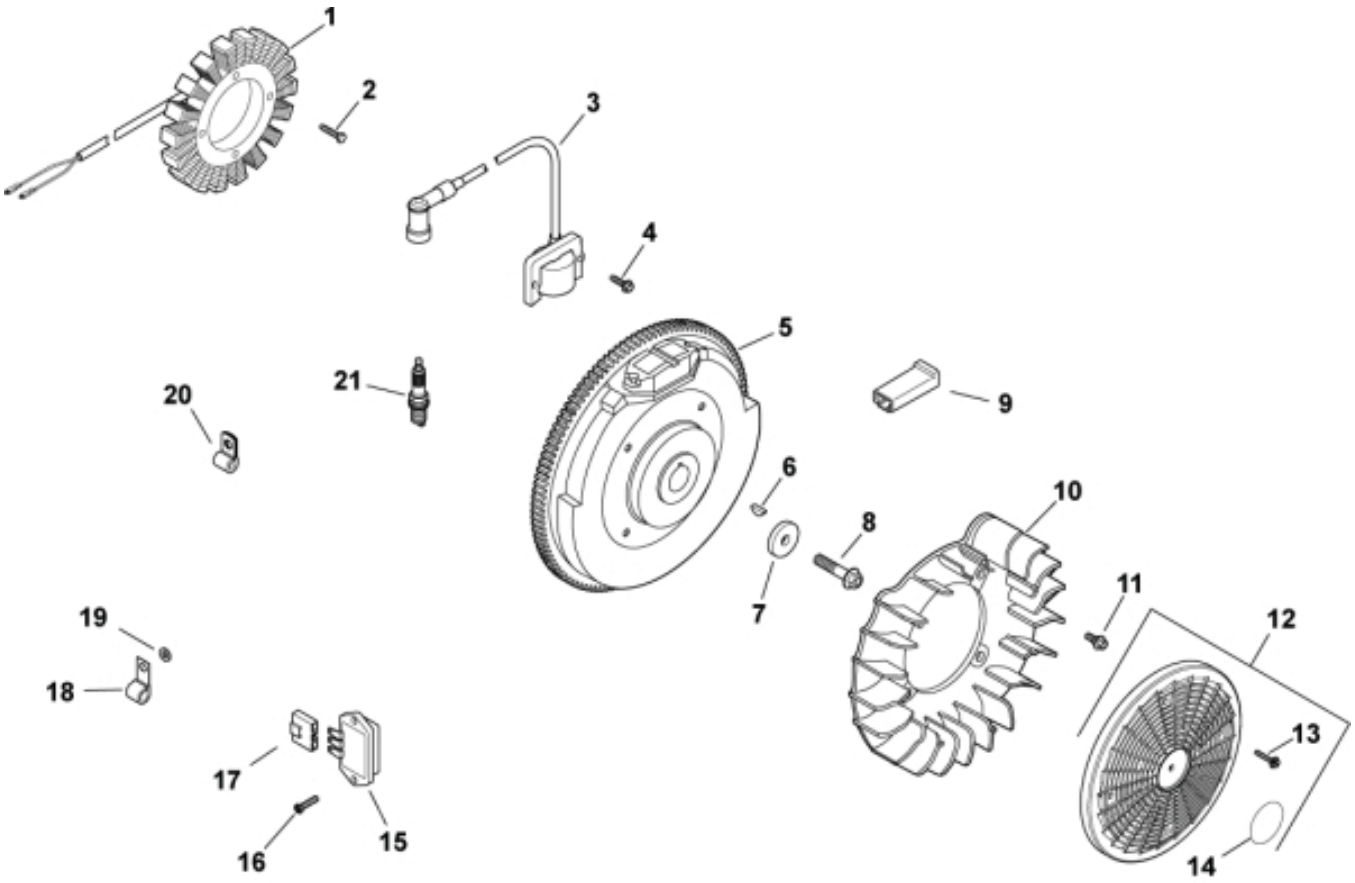

Ref.	Part Number	Description
1	KH-237878	Kit, 15 Amp Stator (Includes KH-25 452 01-S)
2	KH-M-548025-S	Screw, THD FRM M5 x 0.8 x 25
3	KH-24-584-45-S	Kit, Module, Ignition (CDI Fixed)
4	KH-M-545020-S	Screw, FLG THD FRM M5 x 0.8 x 20
5	KH-24-025-59-S	Flywheel
6	KH-X-42-15	Key, 3/16" x 5/8"
7	KH-12-468-03	Washer, Flat 13/32"
8	KH-12-086-14	Screw, FLG M10X1.5X45
9	KH-277563	Connector (1 Contact)
10	KH-24-157-12-S	Fan
11	KH-25-086-47	Bolt, Shoulder
12	KH-54-755-15	Kit, Grass Screen (Includes 2, 3)
13	KH-25-086-117-S	Screw, Flg Sems M4 x 0.7 x 25
14	KH-24-113-18-S	Decal, Grass Screen
15	KH-41-403-09	Rectifier-Regulator
16	KH-25-086-157-S	Screw, Hex Flange Hi-Lo
17	KH-236602-S	Connector (3 Contact)
18	KH-235173	Clip, Cable
19	KH-X-25-63	Washer, Flat, 1/4"
20	KH-210281-S	Clip
21	KH-12-132-02	Plug, Spark
	KH-24-126-137-S	Bracket, Ground Strap (not shown)
	KH-24-176-112-S	Harness, Wiring (not shown)
	KH-24-176-41	Lead, Duplex (not shown)
	KH-25-454-07-S	Tie (not shown)
	KH-25-518-34-S	Lead (not shown)
	KH-25-452-01-S	Terminal (not shown)

Kohler CV730-0055 Starting System

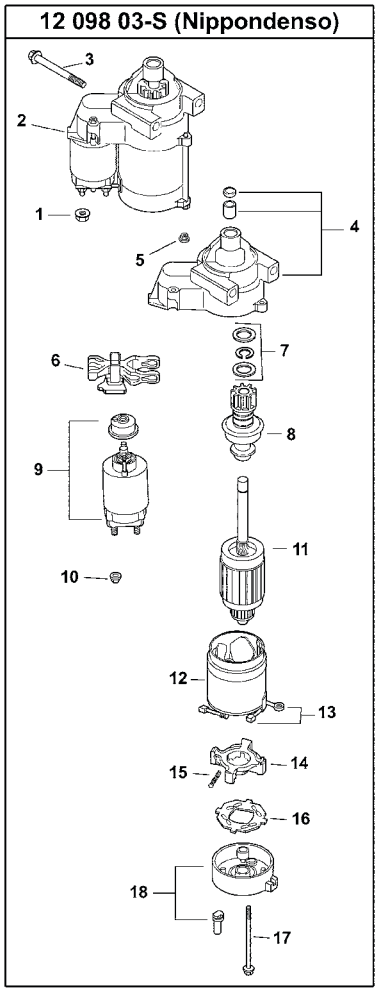

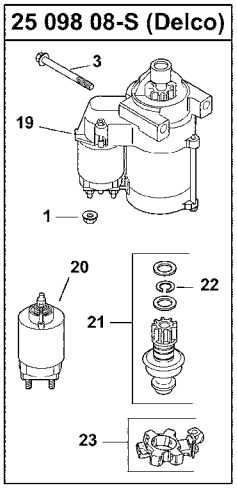

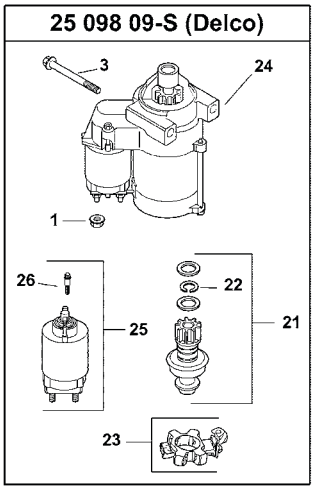

Ref.	Part-Number	Description
1	KH-M-841080	Nut, Flg M8 x 1.25
2	KH-25-098-08-S	Starter Assembly, Solenoid Shift
3	KH-M-839080	Screw, FLG M8 x 1.25 x 80
4	KH-12-081-02-S	Drive, End Cap
5	KH-52-100-10	Nut
6	KH-12-090-10	Lever, Drive
7	KH-24-755-84	Kit, Starter Repair
8	KH-12-239-01	Drive Pinion
9	KH-52-435-02	Solenoid
10	KH-52-100-09	Nut
11	KH-12-170-03	Armature
12	KH-12-471-01	Frame w/Brushes
13	KH-52-221-01	Brush & Spring Kit (Includes 15)
14	KH-52-323-03	Brush Holder

Ref.	Part-Number	Description
15	KH-52-089-09	Spring, Brush
16	KH-52-168-01	Insulator
17	KH-52-211-05	Thru Bolt
18	KH-12-301-01	Commutator, End Cap
19	KH-25-098-08-S	Starter Assy, Solenoid Shift
20	KH-25-435-04-S	Solenoid
21	KH-25-755-33-S	Kit, Starter Pinion (Includes 22)
22	KH-25-141-05-S	Ring, Retaining
23	KH-25-221-01-S	Kit, Brush Holder
24	KH-25-098-09-S	Starter Assy, Solenoid Shift (Includes 21-23, 25, 26)
25	KH-25-435-06-S	Kit, Solenoid (Includes 26)
26	KH-25-086-113-S	Screw, External Torx Head

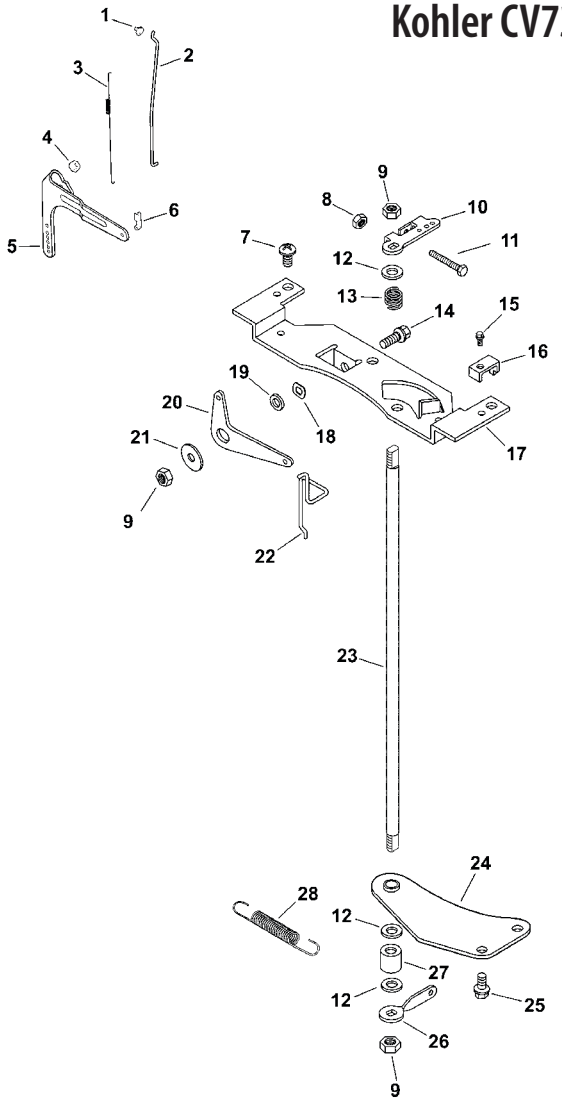

Ref.	Part-Number	Description
1	KH-25-158-08	Bushing, Lingage Retaining
2	KH-24-079-04	Linkage, Throttle
3	KH-24-089-01	Spring, Linkage
4	KH-M-641060-S	Nut, FLG M6 x 1.0
5	KH-24-090-51-S	Lever, Governor
6	KH-25-158-11	Bushing, Throttle Linkage
7	KH-24-086-06	Screw, Phl Hd 11-16 x 3/4"
8	KH-M-446030-S	Nut, M4 x 0.7
9	KH-M-647060	Nut, Lock M6 x 1.0
10	KH-24-090-09	Lever, Throttle Control
11	KH-M-401030	Screw, Cap M4 x 0.7 x 30
12	KH-X-25-72	Washer, Flat 1/4"
13	KH-24-089-20	Spring, Throttle Shaft
14	KH-M-639016-S	Screw, Flg M6x1.0x16
15	KH-M-545016-S	Screw, Flg Thd Frm M5 x 0.8 x 16

Ref.	Part-Number	Description
16	KH-12-237-01	Clamp, Cable
17	KH-24-126-111-S	Bracket, Control
18	KH-277341	Washer, Spring 3/8"
19	KH-25-431-01-S	Spacer
20	KH-24-090-20	Lever, Choke
21	KH-X-25-52	Washer, Flat 1/4"
22	KH-24-079-10	Linkage, Choke
23	KH-24-144-11	Shaft, Throttle
24	KH-24-126-162-S	Bracket, Throttle Shaft
25	KH-M-645016-S	Screw, Flg Thd Frm M6 x 1.0 x16
26	KH-24-090-12	Lever, Throttle Control
27	KH-24-112-10	Spacer
28	KH-24-089-46-S	Spring, Governor
	KH-24-211-03-S	Bolt, Rd Hd Sq Neck M6x1.0x25

Kohler CV730-0055 Air Intake/Filtration

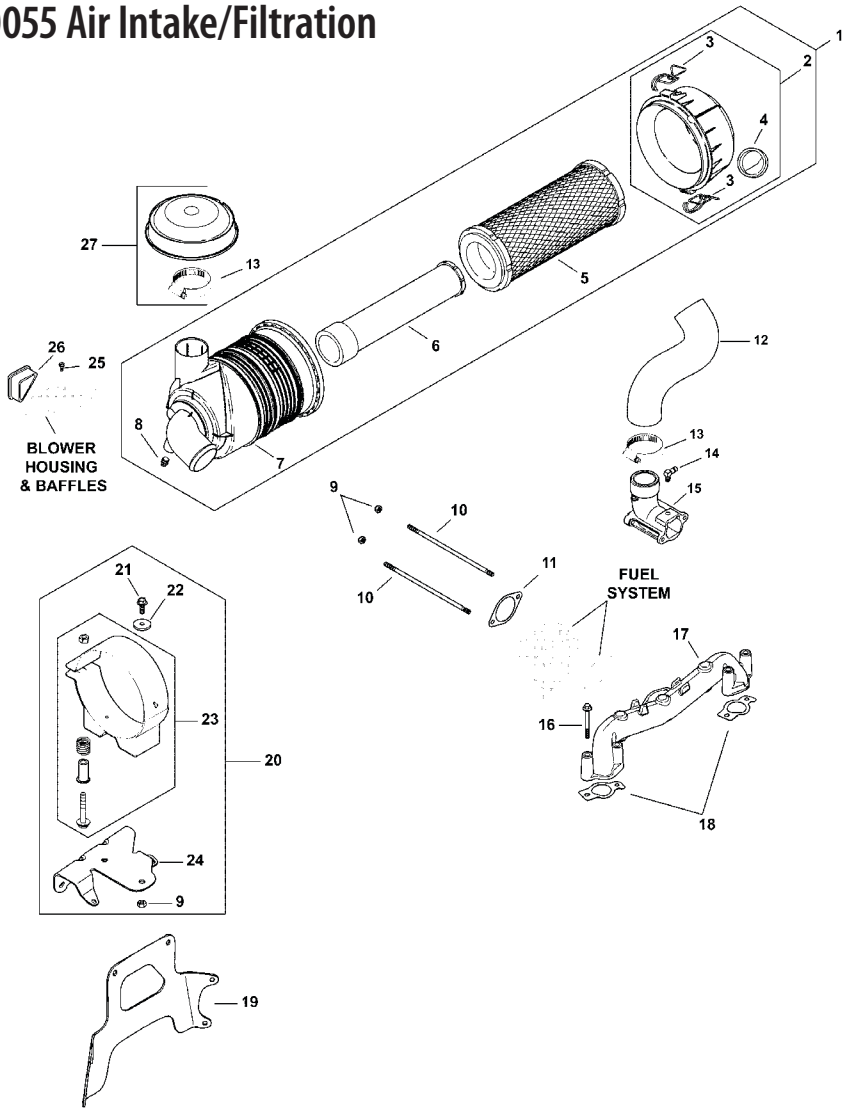

Ref.	Part-Number	Description
1	KH-25-048-11-S	Cleaner, Air-Canister (Includes 2-8)
2	KH-25-096-06-S	Cover Assembly, Air Cleaner (Includes 3, 4)
3	KH-25-154-05-S	Clip
4	KH-24-462-07-S	Valve, Dust Ejector
5	KH-25-083-01-S	Element, Air Filter-Primary
6	KH-25-083-04-S	Element, Air Filter-Safety
7	KH-25-081-01-S	Housing, HD Air Cleaner
8	KH-25-139-20-S	Plug, Pipe
9	KH-M-647060	Nut, Lock M6 x 1.0
10	KH-24-072-10-S	Stud, M6x1.0x180
11	KH-24-041-14	Gasket, Air Cleaner Base
12	KH-24-326-72-S	Hose, Air Cleaner
13	KH-25-237-21-S	Hose Clamp
14	KH-25-155-38-S	Connector, Hose

Ref.	Part-Number	Description
15	KH-24-054-16-S	Elbow, Air Cleaner
16	KH-25-086-84-S	Screw, Flg M6x1.0x55
17	KH-24-164-06	Manifold, Intake
18	KH-24-041-01	Gasket, Intake Manifold
19	KH-24-126-105-S	Bracket, Main Support
20	KH-24-126-166-S	Bracket, Air Cleaner Sub Assy (Includes 9, 21-24)
21	KH-M-639016-S	Screw, Flg M6x1.0x16
22	KH-X-25-73-S	Washer, Flat 1/4"
23	KH-25-126-02-S	Bracket Assy, Air Cleaner
24	KH-24-126-165-S	Bracket, Air Cleaner Mounting
25	KH-25-086-91-S	Screw, Wsh Hd Tap #8-18x1/2"
26	KH-24-096-17-S	Cover, Blower Housing
27	KH-25-324-02-S	Hood, Air Cleaner (Includes 13)
	KH-25-454-04-S	Tie

Kohler CV730-0055 Exhaust

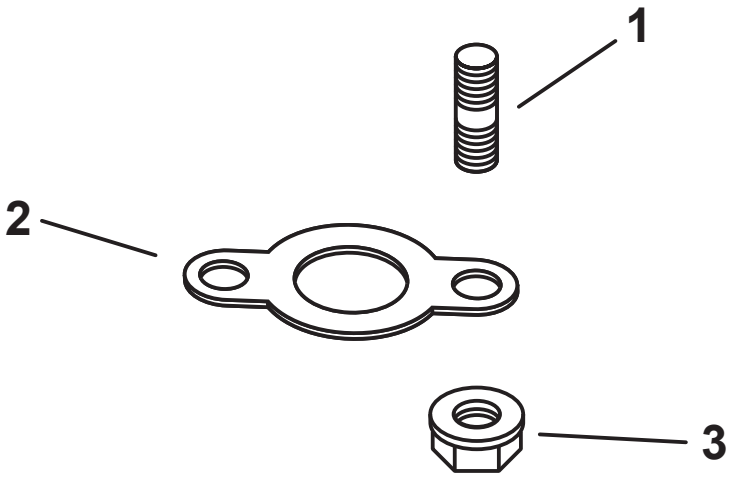

Ref.	Part Number	Description
1	KH-25-072-14-S	Stud, M8 x 1.25 x 33
2	KH-24-041-49-S	Gasket, Exhaust
3	KH-M-841080	Nut, Flg M8 x 1.25

Electrical Schematic

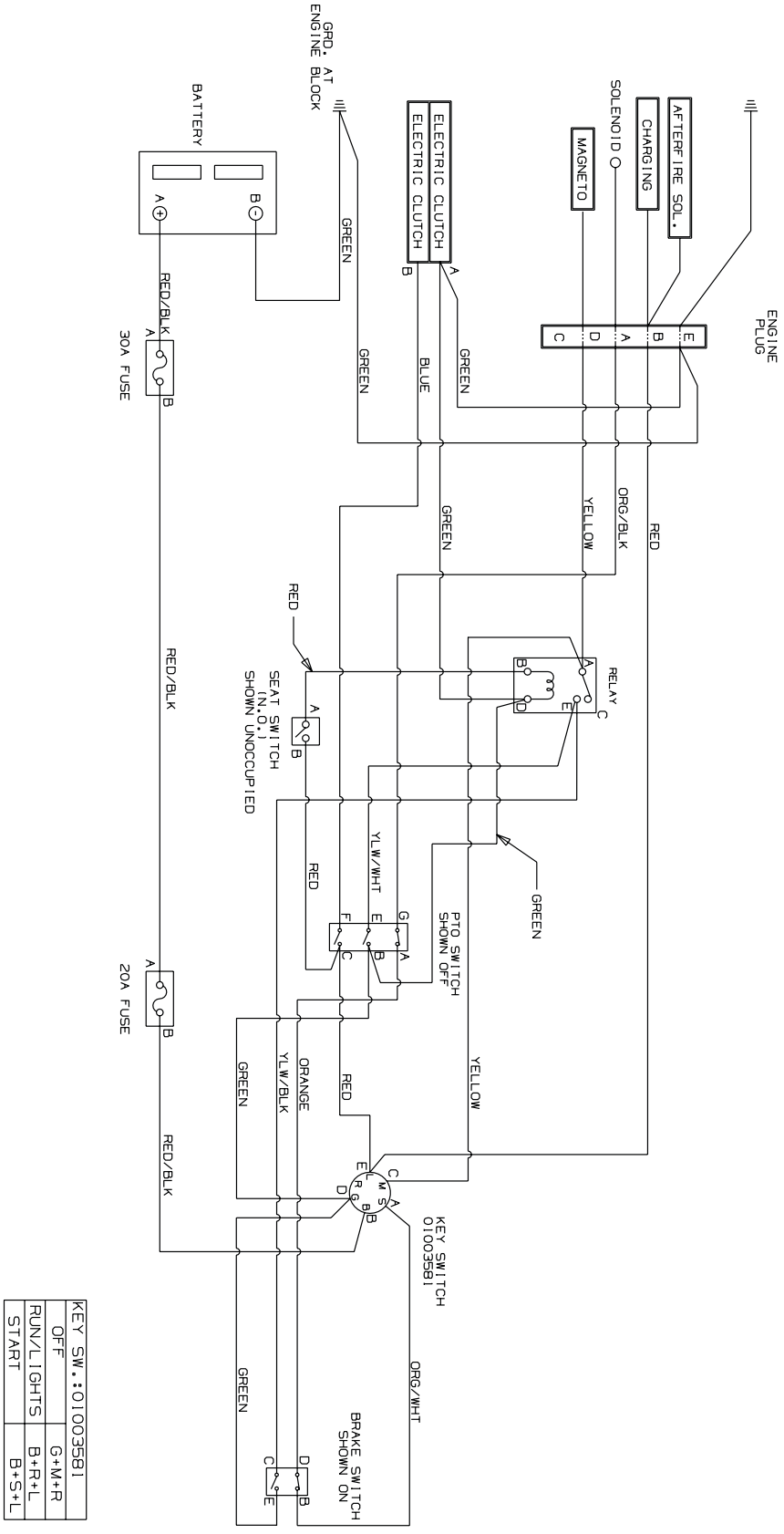

KEY SW.:01003581	
OFF	G+M+R
RUN/LIGHTS	B+R+L
START	B+S+L

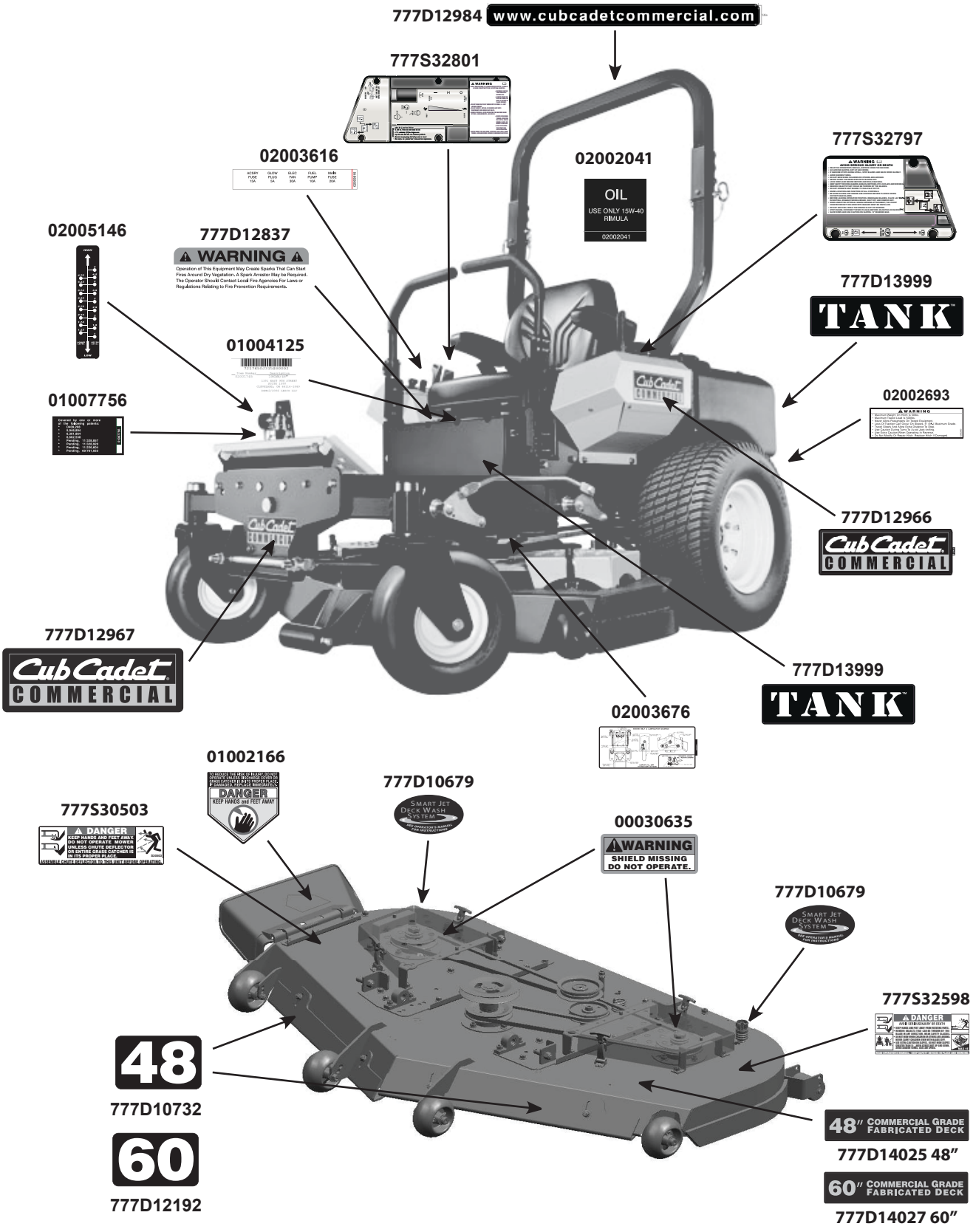
777D12984
www.cubcadetcommercial.com
777S32801
02003616
02002041
OIL
USE ONLY 15W-40
RIMULA
02002041
777S32797
02005146
777D12837
WARNING
Operation of This Equipment May Create Sparks That Can Start Fires Around Dry Vegetation. A Spark Arrestor May be Required. The Operator Should Contact Local Fire Agencies For Laws or Regulations Relating to Fire Prevention Requirements.
777D13999
TANK
01004125
01007756
02002693
777D12966
Cub Cadet
COMMERCIAL
777D12967
Cub Cadet
COMMERCIAL
777D13999
TANK
02003676
01002166
DANGER
KEEP HANDS and FEET AWAY
777D10679
SMART JET DECK WASH SYSTEM
777S30503
DANGER
KEEP HANDS AND FEET AWAY
DO NOT OPERATE MOWER
UNLESS CHUTE DEFLECTOR
OR ENTIRE GRASS CATCHER IS
IN ITS PROPER PLACE
00030635
WARNING
SHIELD MISSING
DO NOT OPERATE.
777D10679
SMART JET DECK WASH SYSTEM
777S32598
DANGER
48
777D10732
60
777D12192
48" COMMERCIAL GRADE FABRICATED DECK
777D14025 48"
60" COMMERCIAL GRADE FABRICATED DECK
777D14027 60"



To order replacement parts, call the Customer Dealer Referral Line at 1-877-282-8684 or visit www.cubcadet.com to find the nearest Cub Cadet dealer in your area.

CUB CADET LLC, P.O. BOX 361131 CLEVELAND, OHIO 44136-0019