Cub Cadet COMMERCIAL

ILLUSTRATED PARTS MANUAL

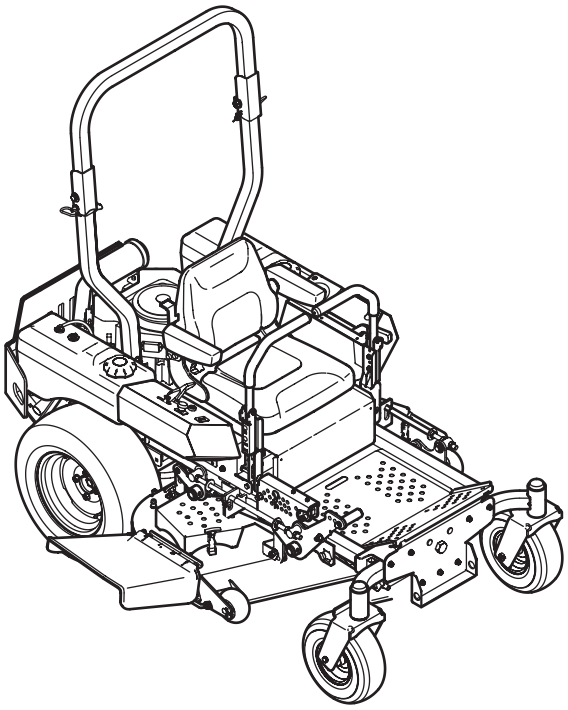

Tank-L 48”/60”

CUB CADET LLC, P.O. BOX 361131 CLEVELAND, OHIO 44136-0019

Printed In USA

Form No. 769-06891
(March 15, 2011)

To The Owner

Thank You

Thank you for purchasing a Cub Cadet Commercial Tank. It was carefully engineered to provide excellent performance when properly operated and maintained.

All information in this manual is relative to the most recent product information available at the time of printing. Please be aware that this Illustrated Part's Manual may cover a range of product specifications for various models.

Components listed and/or illustrated in this manual may not be applicable to all models. We reserve the right to change product specifications, designs and equipment without notice and without incurring obligation.

Throughout this manual, all references to *right* (RH) and *left* (LH) are observed from the operating position.

Table of Contents

Brake Assembly 14
Control Assembly 20
Deck Assembly, 48" 4
Deck Spindle Assembly, 48" 6
Deck Assembly, 60" 8
Deck Spindle Assembly, 60" 10
Electrical Assembly, Kohler 22
Electrical Schematic 34
Engine Assembly, Kohler, 25 & 27HP 24
Engine, Kohler CV730-3130 36
Engine, Kohler CV740-3125 54
Frame Assembly 3
Front Caster Assembly 18
Fuel Tank Assembly 16
Hydraulic Pump, RH BDP-12 30
Hydraulic Pump, LH BDP-12 32
Hydro Hose & Pump Assembly 12
Label Map 35
Lift Assembly 26
Rear Bumper 17
Seat/Floor Panel Assembly 23
Wheel Assembly 19
Wheel Motors, RH & LH 28

Record Product Information

To ease in ordering replacement parts, please locate the model plate on the equipment and record the information in the provided area to the right. You can locate the model plate by looking beneath the seat.

Model Number

Serial Number

Painted Parts

When ordering painted service parts, a four digit color suffix must be added to the part number (e.g. 783-XXXXX-0637). Please refer to the table below for current color codes:

0637	Black
4021	Yellow (Cub Cadet)
0499	Beige (Cub Cadet)
0685	Blue (Cub Cadet)
0691	Black Jack (Cub Cadet Commercial)

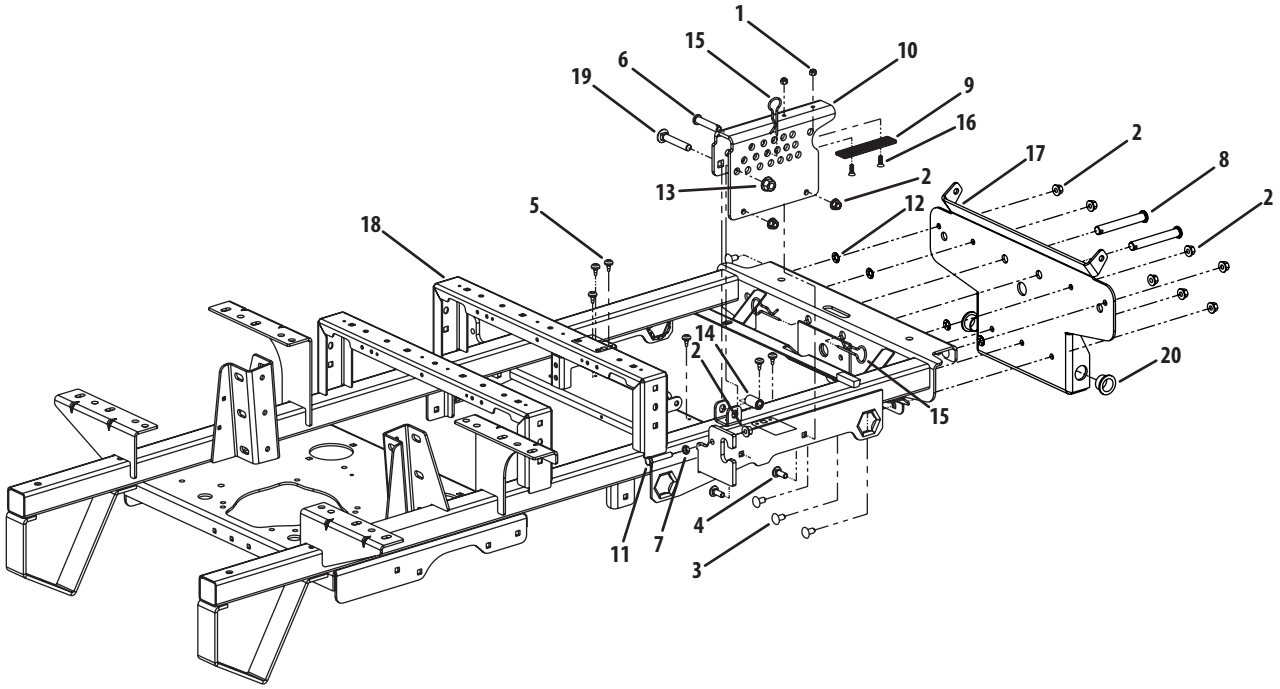

Ref.	Part Number	Description
1	00012152	Lock Nut w/Nylon Insert
2	00022560	Hex Nut, 3/8-16 Flange Lock
3	710-3178	Carriage Bolt, 3/8-16 x .75 Long
4	710-3168	Carriage Bolt, 3/8-16 x 1
5	935-0199A	Rubber Bumper, .62 OD x .22 Thick
6	711-0761	Clevis Pin, .500 Dia. x 2.50 Lg.
7	01002511	Nut, 3/8-16, Jam
8	01003282	Clevis Pin, .625 Dia x 4.375 Long
9	02003749	Wear Plate, 1.25 x 5.00
10	02005101	Lift Index Bracket

Ref.	Part Number	Description
11	01005810	Hex Cap Screw 3/8-16 x 2.00
12	01008225	Push Retainer, 3/8
13	01010119	Nut, 1/2-13, Flangelock
14	02002655	Spacer, .51 ID x .75 OD x 1.40
15	02003074	HitchPin, .120 Dia. x 3.0
16	02003505	Flat Head Cap Screw, 1/4-20 x .75
17	02004919	Bracket Assembly, Frame, Front
18	02003536	Frame Assembly
19	02003563	Carriage Bolt, 1/2-13 x 3.00
20	02002628	Bushing, 1.00 ID x 1.50 OD x .75

48″ Fabricated Deck

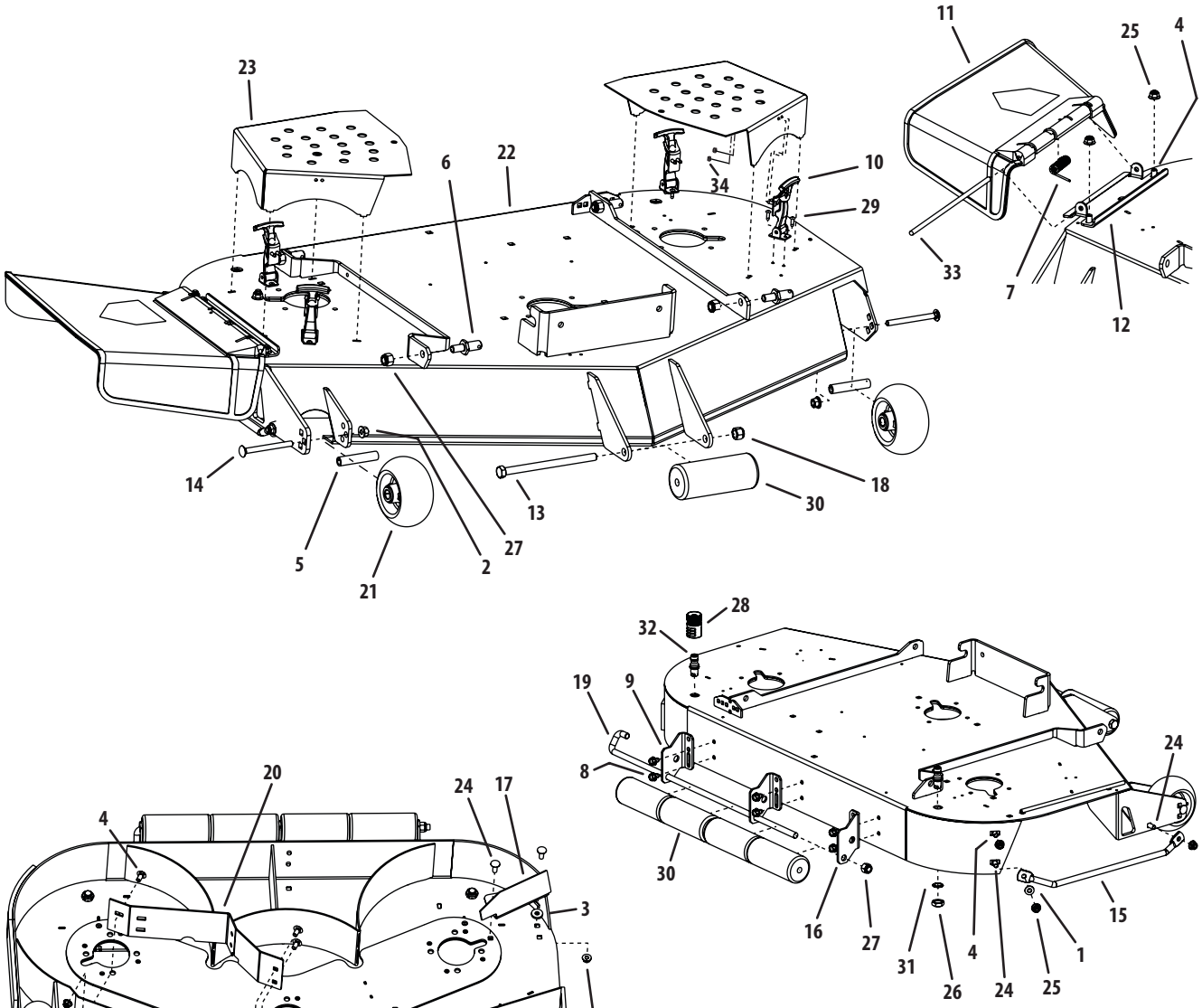

Ref.	Part Number	Description
1	00012158	Flat Washer, 3/8
2	00022560	Flange Lock Hex Nut, 3/8-16
3	00083192	Idler Washer
4	710-3178	Carriage Bolt, 3/8-16 x .75 Lg.
5	750-3193	Wheel Spacer
6	01001745	Pin, 5/8 Dia. x 1.2 Lg.
7	732-04797	Spring Torsion, 0.639 ID x 2.16 LG
8	01004304	Hex Index Washer Screw, 3/8-16, .05
9	01004707	Deck Roller Mount Bracket
10	01005869P	T-Handle Latch Draw
11	01006693	Deflector Chute
12	01006748	Deflector Chute Bracket
13	01006961	Hex Cap Screw, 1/2-20 x 7.50
14	01008049	Carriage Bolt, 3/8-16 x 4.00
15	01008644	Finger Guard
16	01008790	Deck Roller Mount Bracket, Right
17	01009296	Chute Baffle
18	02002299	Lock Nut, Nylon Insert, 1/2-20
19	02002799	J-Hook w/ Threaded Roller
20	02005695	48" Adjustment Baffle
21	634-3159	Complete Wheel, 5.00 Dia.
22	680-00069	48" Deck Assembly
23	703-06871	Deck Belt Cover
24	710-3168	Carriage Bolt, 3/8-16 x 1
25	712-04065	Lock Nut, Nylon Insert, 3/8-16
26	912-0641	Hex Nut, M16-1.5
27	712-3083	Lock Nut, Nylon Insert, 1/2-13
28	921-04041	Water Nozzle Adaptor
29	00017778	Phillips Head Screw, #10-32 x 1/2
30	731-3005	Front Roller
31	936-0760	Lock Washer, 17 x 23.8 x 1.95
32	737-04003D	Deck Water Nozzle
33	747-3384	Chute Deflector Rod
34	00014608	Lock Nut, Nylon Insert, #10-32

48" Fabricated Deck Spindle Assembly

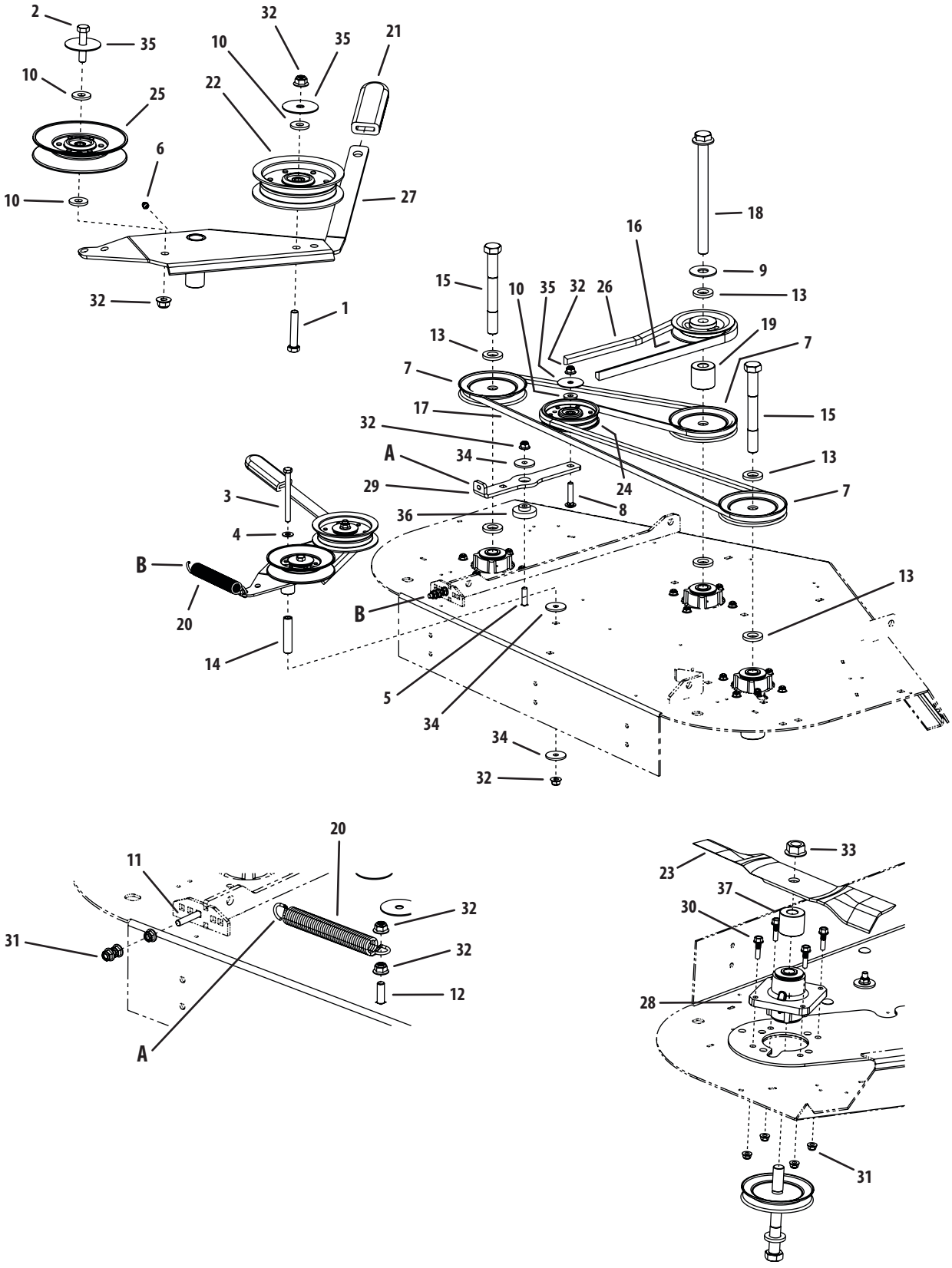

48" Fabricated Deck Spindle Assembly

Ref.	Part Number	Description
1	00002528	Hex Cap Screw, 3/8-16 x 2.00
2	00008495	Hex Cap Screw, 3/8-16 x 1-3/4
3	00011925	Hex Cap Screw, 3/8-16, 4.00
4	00012158	Washer, 3/8
5	00030276	Carriage Bolt, 3/8-16 x 1-1/2
6	00060078	Grease Fitting, 1/4-28 x 3/16
7	956-1209	V-Pulley 4.90 OD
8	710-0560	Carriage Bolt, 3/8-16, 1.75
9	736-3014	Flat Washer, .781 ID 2.00 OD, .105
10	736-3052	Flat Washer, .406 ID, 1.0 OD, .105
11	710-0458	Carriage Bolt, 5/16-18 x 1.75
12	710-3034	Carriage Bolt, 3/8-16 x 1.25
13	01003123	Spacer .812 ID x .268 LG
14	01003245	Spacer, .39 ID x .625 OD x 2.75
15	01004185	Hex Cap Screw, 3/4-16 x 6.50
16	01005201	V-Pulley 5.25 OD
17	01005374	V-Belt, A Section x 105.3
18	01005388	Hex Cap Screw, 3/4-16, 9.00
19	01006681	Spacer, .76 ID x 1.75 OD x 1.60

Ref.	Part Number	Description
20	02003712	Extension Spring, .94 OD x 7.57 LG
21	02003740	Idler Tension Handle Grip
22	02004447	Idler Pulley, 4.06 OD w/Deep Flange
23	02005017	Blade, 17.0, Hi-Lift, 0.756 ID
24	02005077	Idler Pulley, 4.06 Dia.
25	02005079	Idler Pulley, 5.06 Dia.
26	01005378	V-Belt, B Section, 87.2
27	02005509P	Idler Arm Assembly includes:
	01000308	Bearing
28	918-04939	Aluminum Spindle Assembly
29	703-07010	Idler Arm
30	710-04831	Bolt, 5/16-18 x 1.25
31	712-04063	Nut, Nylon Insert, 5/16-18
32	712-04065	Nut, Nylon Insert, 3/8-16
33	712-3078	Nut, 3/4-16, Flangelock
34	936-0227	Washer, .390 x 1.50 x .134
35	736-3040	Washer, .406 x 1.92 x .060
36	738-04376	Shoulder Spacer, .854 x .280
37	750-05329	Spacer, .76 ID x 1.75 OD x 1.50

60″ Fabricated Deck Assembly

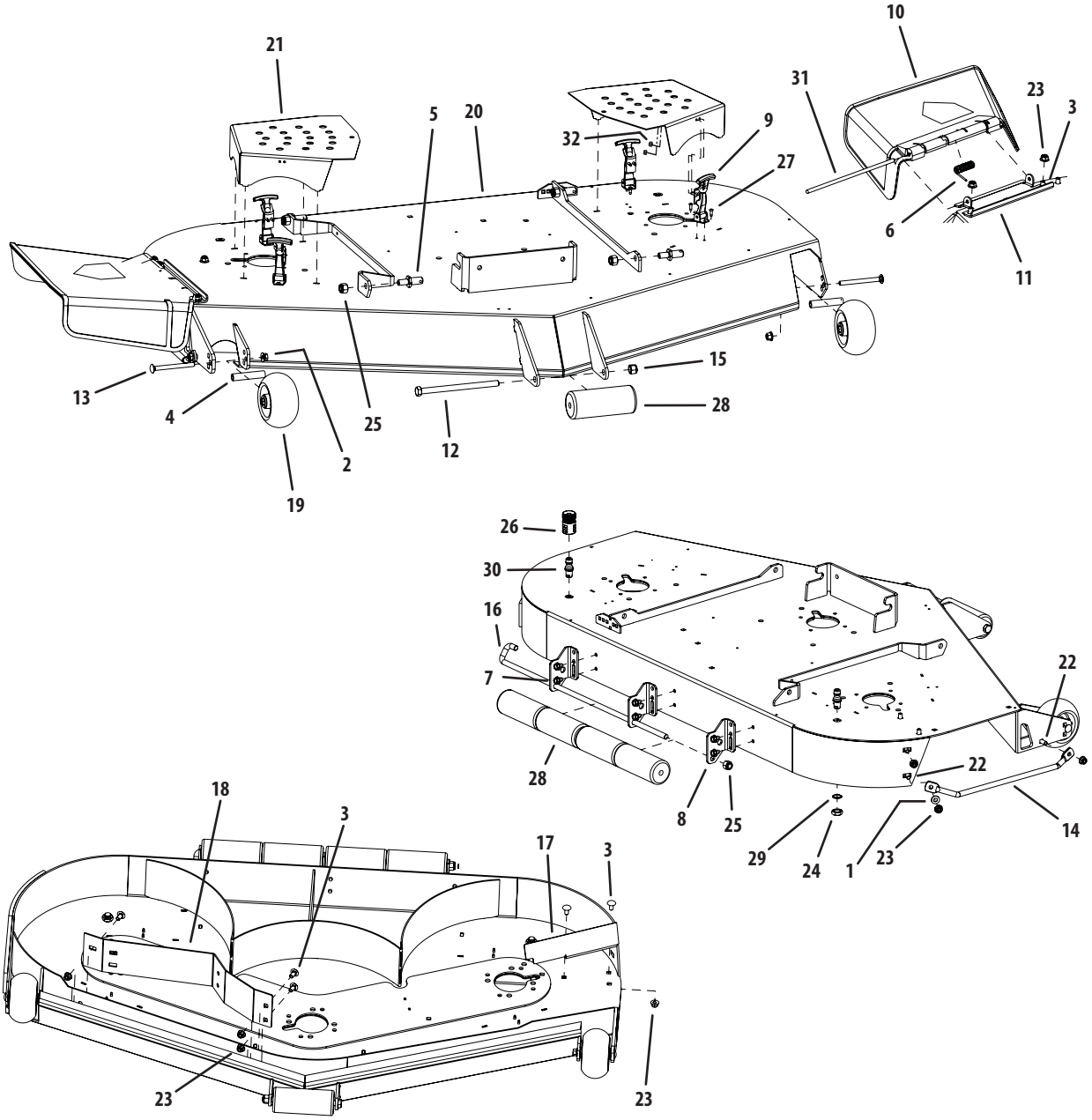

Ref.	Part Number	Description
1	00012158	Washer, 3/8
2	00022560	Flange Lock Hex Nut, 3/8-16
3	710-3178	Carriage Bolt, 3/8-16 x .75 Lg.
4	750-3193	Spacer, .390 x .620 x 3.04
5	01001745	Pin, 5/8 Dia. x 1.2 Lg.
6	732-04797	Spring Torsion, 0.639 ID x 2.16 LG
7	01004304	Hex Index Washer Screw, 3/8-16, .5
8	01004707	Deck Roller Mount Bracket
9	01005869P	T-Handle Latch Draw
10	01006693	Chute Deflector
11	01006748	Chute Deflector Bracket
12	01006961	Hex Cap Screw, 1/2-20 x 7.50
13	01008049	Carriage Bolt, 3/8-16 x 4.00
14	01008644	Finger Guard
15	02002299	Lock Nut, Nylon Insert, 1/2-20
16	02002799	J-Hook w/ Threaded Roller

Ref.	Part Number	Description
17	02005195	Chute Baffle
18	02005694	Baffle, 60" Adjustment
19	634-3159	Complete Wheel, 5.00 Dia.
20	680-00097	60" Deck Assembly
21	703-06871	Deck Belt Cover
22	710-3168	Carriage Bolt, 3/8-16 x 1.00
23	712-04065	Lock Nut, Nylon Insert, 3/8-16
24	912-0641	Hex Nut, M16-1.5
25	712-3083	Lock Nut, Nylon Insert, 1/2-13
26	921-04041	Water Nozzle Adaptor
27	00017778	Phillips Head Screw, 10-32
28	731-3005	Front Roller
29	936-0760	Lock Washer, 17 x 23.8 x 1.95
30	737-04003D	Deck Water Nozzle
31	747-3384	Chute Deflector Rod
32	00014608	Lock Nut, Nylon Insert, 10-32

60" Fabricated Deck Spindle Assembly

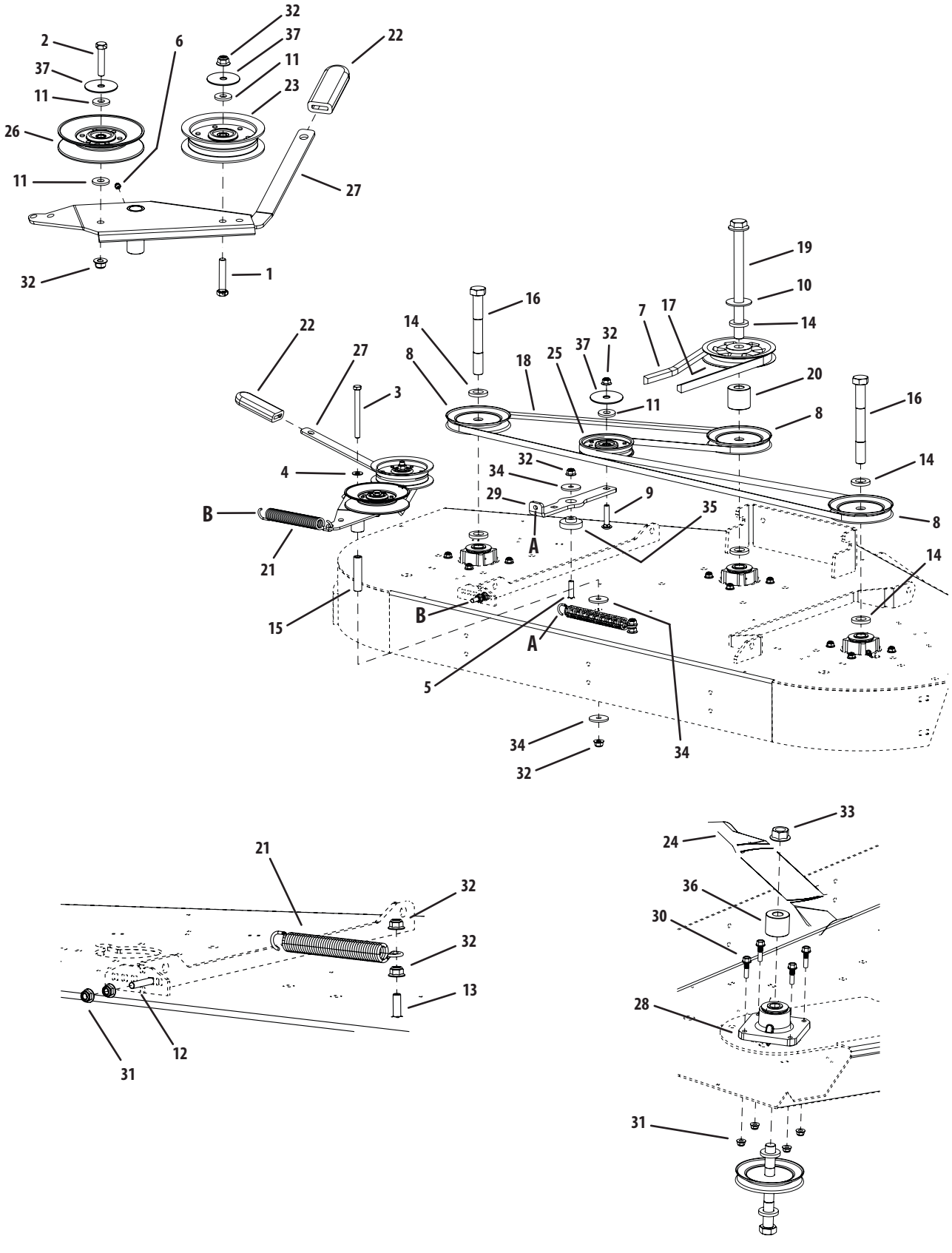

60" Fabricated Deck Spindle Assembly

Ref.	Part Number	Description
1	00002528	Hex Cap Screw, 3/8-16 x 2.00
2	00008495	Hex Cap Screw, 3/8-16 x 1-3/4
3	00011925	Hex Cap Screw, 3/8-16 x 4.00
4	00012158	Washer, 3/8
5	00030276	Carriage Bolt, 3/8-16 x 1-1/2
6	00060078	Grease Fitting, 1/4-28 x 3/16
7	00068079	V-Belt, B-Section, BK90
8	956-1209	V-Pulley, 4.90 OD
9	710-0560	Carriage Bolt, 3/8-16, 1.75
10	736-3014	Flat Washer, .781 ID 2.00 OD, .105
11	736-3052	Flat Washer, .406 ID, 1.0 OD, .105
12	710-0458	Carriage Bolt, 5/16-18 x 1.75
13	710-3034	Carriage Bolt, 3/8-16 x 1.25
14	01003123	Spacer, .812 ID x 1.47 OD x .218
15	01003245	Spacer, .39 x .635 x 2.75
16	01004185	Hex Cap Screw, 3/4-16 x 6.50
17	02005097	V-Pulley, 6.06 OD
18	01005376	V-Belt, A Section x 122.3
19	01005388	Hex Cap Screw, 3/4-16, 9.00

Ref.	Part Number	Description
20	02000454	Spacer, .76 ID x 2.00 OD x 1.28
21	02003712	Extension Spring, .94 x OD x 7.57
22	02003740	Grip, 1.0 x 3.2 x .25
23	02004447	Idler Pulley, 4.06 OD
24	02005019	Hi-Lift Blade, 21.0, 0.756 ID
25	02005077	Flat Pulley with Flanges
26	02005079	Idler Pulley, 5.06 OD
27	02005509	Idler Arm Assembly includes:
	01000308	Bearing
28	918-04939	Aluminum Spindle Assembly
29	703-07010	Idler Arm
30	710-04831	Bolt, 5/16-18 x 1.25
31	712-04063	Nut, 5/16-18, Nylon Flange Lock
32	712-04065	Nut, 3/8-16, Nylon Flange Lock
33	712-3078	Flange Hex Nut, 3/4-16
34	936-0227	Washer, .390 x 1.500 x .134
35	738-04376	Shoulder Screw, .854 x .280
36	750-05329	Spacer, .76 ID x 1.75 OD x 1.50
37	736-3040	Flat Washer, .406 x 1.92 x .060

Hydro Hose & Pump Assembly

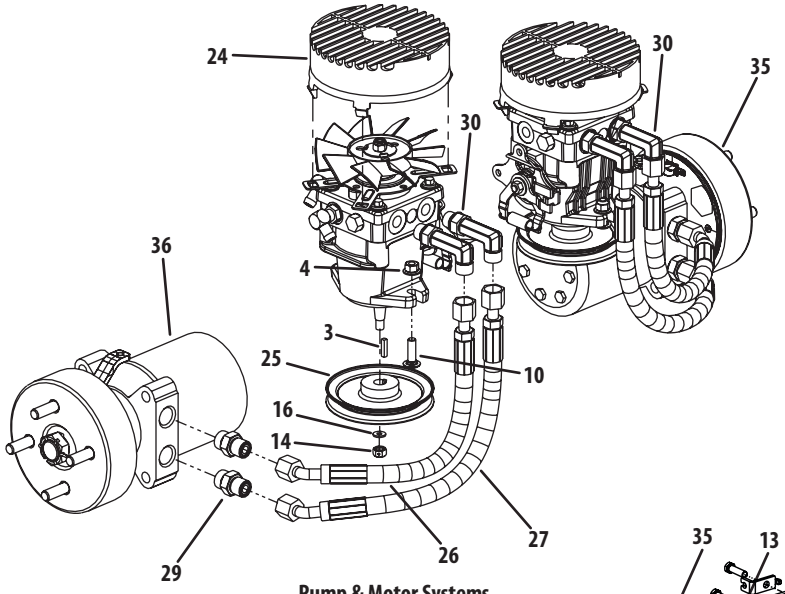

Pump & Motor Systems

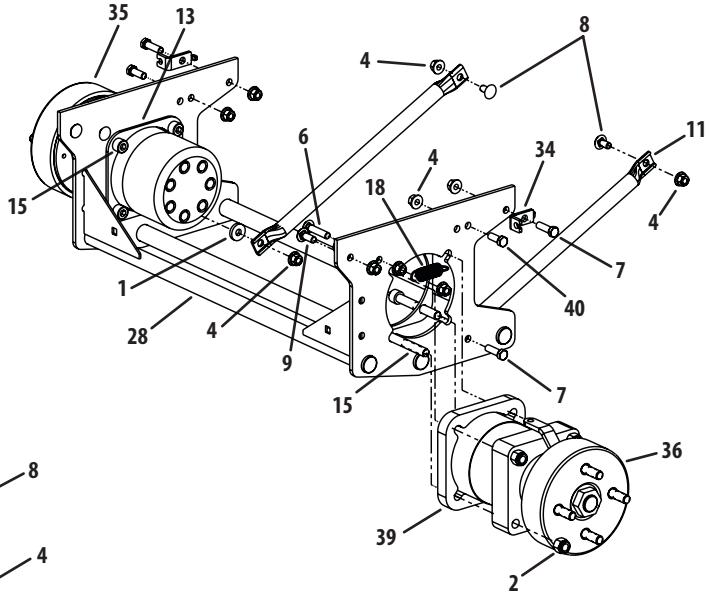

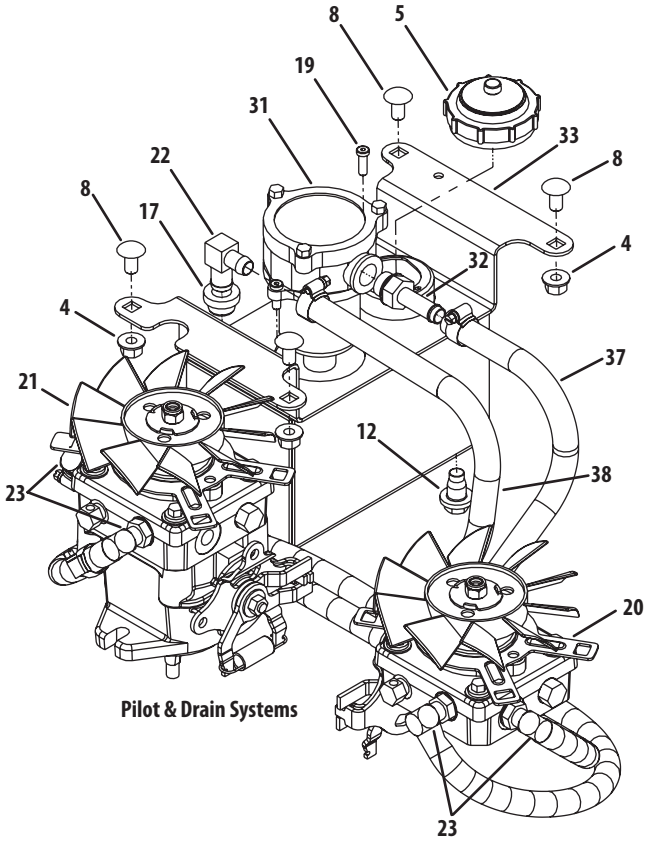

Pilot & Drain Systems

Hydro Hose & Pump Assembly

Ref.	Part Number	Description
1	00083192	Idler Washer
2	712-3083	Washer lock 3/8 zinc
3	00020628	Key, 3/16" x 7/8"
4	00022560	Flange Lock Hex Nut, 3/8-16
5	00030261	Cap, Hydro Oil Tank
6	710-0560	Hex Carriage Screw, 3/8-16, 1.75
7	710-3005	Hex Cap Screw, 3/8 -16 x 1.25
8	710-3178	Carriage Bolt, 3/8-16 x .75 LG.
9	710-3168	Carriage Bolt, 3/8-16 x 1
10	710-3034	Carriage Screw, 3/8-16 x 1.25
11	01002593	Strut Frame
12	738-0940	Oil Pan Drain Plug w/ Seal
13	01006949	Hydro Wheel Motor Backup Plate
14	01007309	Hex Nut, 3/8-24
15	01007791	Socket Head Cap Screw, 1/2-13; 3-1/2
16	936-3015	Flat Washer, .469 ID X .875 OD X .105
17	02000296	Grommet Fitting, .54 ID x .78 OD
18	02000401	Spring Extension, .740 OD x 2.656
19	02000841	Head Cap Screw, 1/4-20 x 0.75
20	02000905P	Hydro Pump, BDP-12, RH
	01009631P	Kit, Fan
21	02000906P	Hydro Pump, BDP-12, LH
	01009631P	Kit, Fan
22	02001151	Fitting Elbow Spur, 5/8 x 1/2
23	02001160	Fitting Elbow, 9/16 x 1/2

Ref.	Part Number	Description
24	02001169	Fan Pump Shroud
25	02001172	Hydro Pump Pulley
26	02001176	Short Pressure Hose Assembly
27	02001177	Long Pressure Hose Assembly
28	02004429	Hydro Motor Frame Assembly
29	02001715	Adaptor Fitting, 8 x 10
30	02002003	Adaptor, 8 x 8
31	02002257	Hydraulic In-Tank Filter includes:
	02002258	Replacement Filter
32	02002557	Fitting, 3/4 ORB x 1/2 Tube
33	02002701	Hydraulic Tank Assembly
34	703-07750	Rear Cable Mounting Bracket
35	918-04720	Hydro Motor, LH Assembly
36	918-04721	Hydro Motor, RH Assembly
37	02001872P	Hose Assembly, Pilot inlcudes:
	02001175	Tee Fitting, 1/2
	02002392	Hose Clamp, 1/2
	--	Fuel Hose, .50 ID x .75 OD (in inches)
38	02001873P	Hose Assembly, Drain inlcudes:
	02001175	Tee Fitting, 1/2
	02002392	Hose Clamp, 1/2
	--	Fuel Hose, .50 ID x .75 OD (in inches)
39	01009775	Spacer, Hydro, Wheel Motor
40	710-0514	Hex Cap Screw, 3/8-16 x 1.00

Brake Assembly

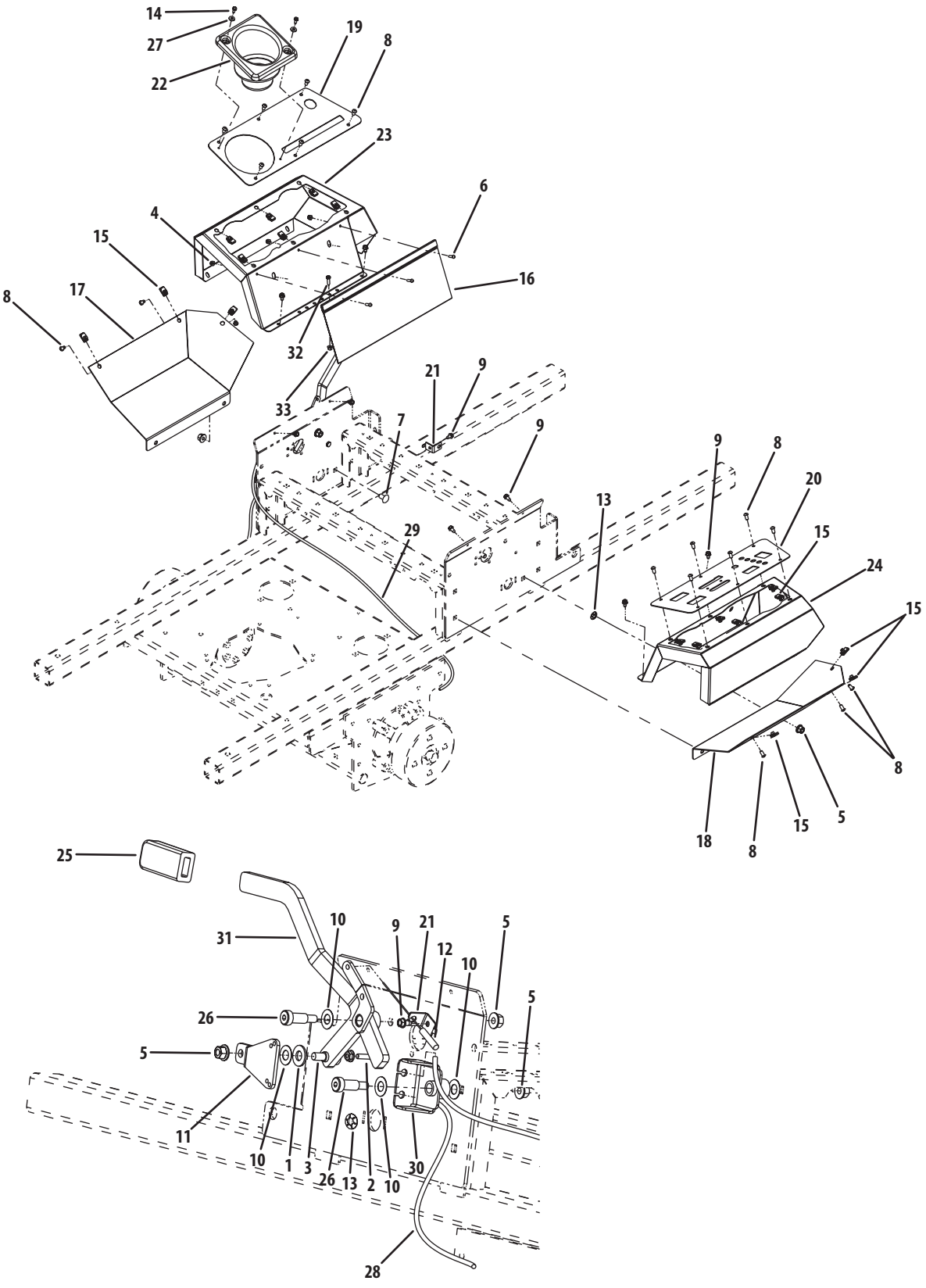

Ref.	Part Number	Description
1	00012577	Washer, 1/2 Zinc
2	710-3168	Carriage Bolt, 3/8-16, 1.00
3	00011450	Shoulder Bolt, 1/2 x 1/2
4	00014608	Lock Nut, Nylon Insert, 10-32
5	00022560	Flange Lock Hex Nut, 3/8-16
6	00030906	Machine Screw, 10-32 x 5/8
7	710-3178	Carriage Bolt, 3/8-16 x .75
8	710-3256	Screw Button Head, 1/4-20 x .5
9	710-0599	Screw, TT, 1/4-20, 0.5, Washer
10	936-0369	Washer, .508 ID x 1.0 OD x .020
11	02003841	Centering Bracket
12	01008198P	Left Hand Brake Cable
13	01008225	Push Retainer, 3/8
14	01008531P	Screw, #10-32 x 0.500
15	712-04199	U-Nut, 1/4-20
16	02000362	Bag, Debris Storage
17	02002785	Lower Panel, LH
18	02002786	Lower Panel, RH
19	02002806	Control Panel Cover, LH
20	703-07603	Control Panel Cover, RH
21	02002864	Brake Cable Mounting Bracket
22	02002874	Cup Holder
23	02002969	Control Panel, LH
24	02002970	Control Panel, RH
25	02003010	Parking Brake Grip
26	02003603	Shoulder Bolt, 1/2 x 1.00, 3/8-16
27	02003725	Washer, 3/16
28	02003770	Brake Cable, LH
29	02003774	Brake Cable, RH
30	02003776	Brake Cable Bracket
31	02005151	Brake Lever
32	710-3015	Screw, Hex, Cap, 1/4-20 x .75
33	912-3027	Lock Nut, 1/4-20

Fuel Tank Assembly

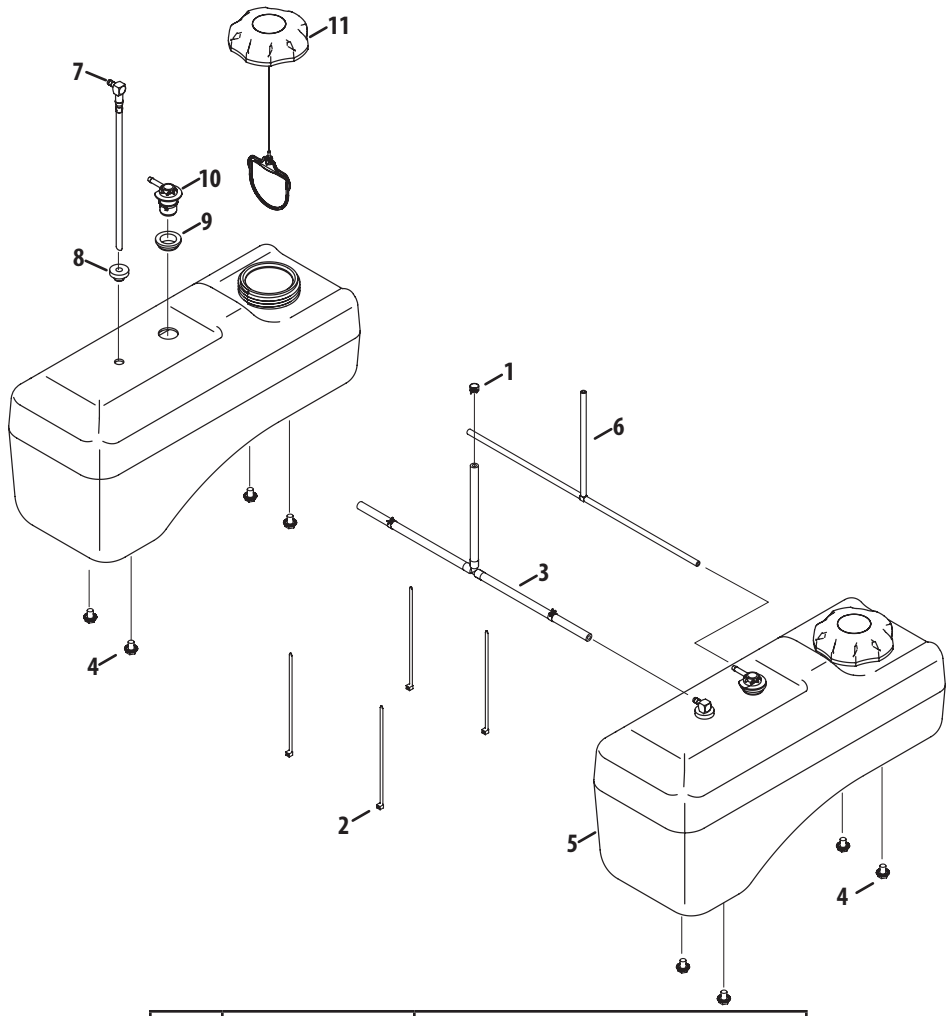

Ref.	Part Number	Description
1	00023335	Hose Clamp
2	725-0157	Cable Tie
3	02001908	Hose Assembly
4	02005013	Hex Flange Screw, ⅜-16 x .500
5	951-04318	Fuel Tank (Inc. #7-11)
6	751-12282	Hose Assembly
7	01007425	Fuel Pick-up Fitting Valve
8	735-04065	Fuel Tank Bushing
9	735-04081	Rubber Grommet
10	751-12118	Fuel Rollover Valve
11	951-12193A	Fuel Cap

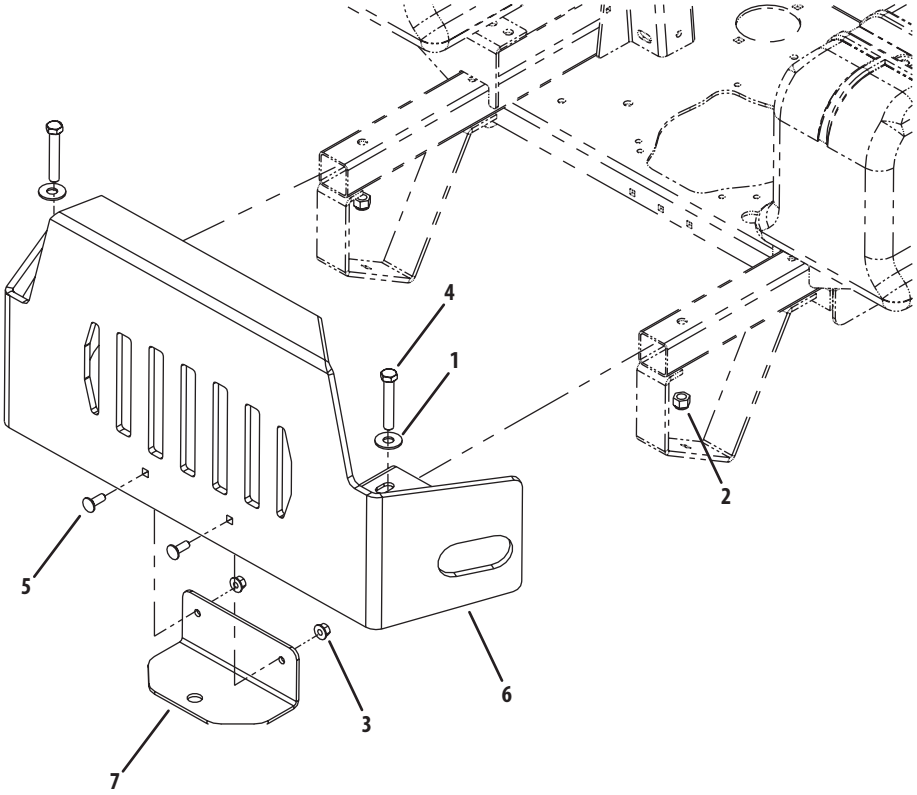

Ref.	Part Number	Description
1	00011459	Flat Washer, 1/2
2	712-3083	Hex Nut, 1/2-13, Insert Lock
3	00022560	Nut, Hex 3/8-16 Flange Lock
4	00030046	Hex Cap Screw, 1/2-13, 3.00
5	710-3168	Carriage Bolt, 3/8-16 x 1.00
6	02004118	Bumper Assembly
7	02004120	Hitch Bracket

Front Caster Assembly

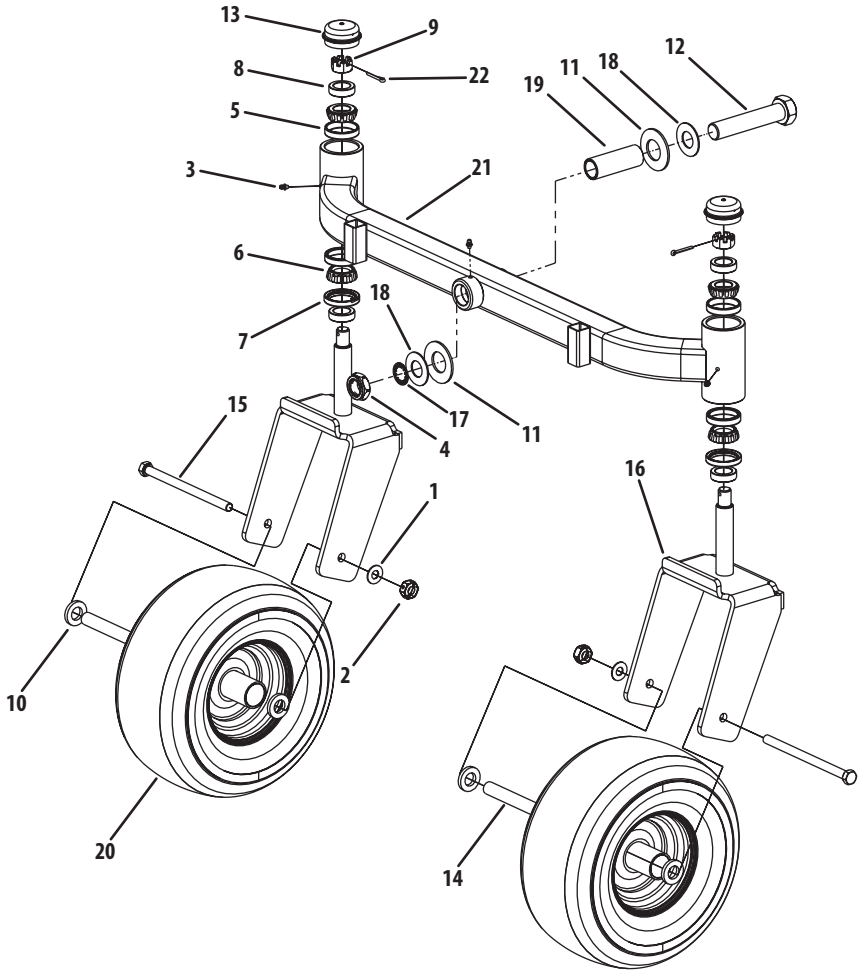

Ref.	Part Number	Description
1	00012577	Washer, 1/2 x 1 Shim
2	00023287	Nut, 1/2-20, Center Lock
3	00060078	Grease Fitting, 1/4-28 x 3/16
4	712-3075	Nut, Jam, 1.0-14, Insert Lock
5	01002620	Cup Bearing
6	01002621	Bearing Cone
7	01002622	Seal
8	01002624	Ring Seal
9	712-0359	Slotted Nut, 3/4-16
10	01003123	Spacer, .812 ID x .218LG
11	01006294	Bell Washer, 1.25 ID x 2.5 x .157
12	01006309	Hex Cap Screw, 1-14 x 5.0
13	01006347	Grease Cap, 1.986 OD

Ref.	Part Number	Description
14	01006912	Wheel Spacer
15	01006961	HHCS, 1/2-20, 7.50
16	01007342	Yoke, Caster Wheel
17	01009997	Retainer Extension, Self Locking
18	02000588	Flat Washer, 1.00 ID
19	02000589	Spacer, 1.005 ID x 1.25 OD x 3.6
20	02002821	Wheel,13 x 6.50 x 6.0, Beige, includes:
	02002108	Tire
	02002106	Roller Bearings (per tire)
	02002107	Retainer Bushings (per tire)
21	680-00040	Front Axle Assembly 48"
—	02004876	Front Axle Assembly 60"
22	714-0162	Cotter Pin, 5/32, 1.25

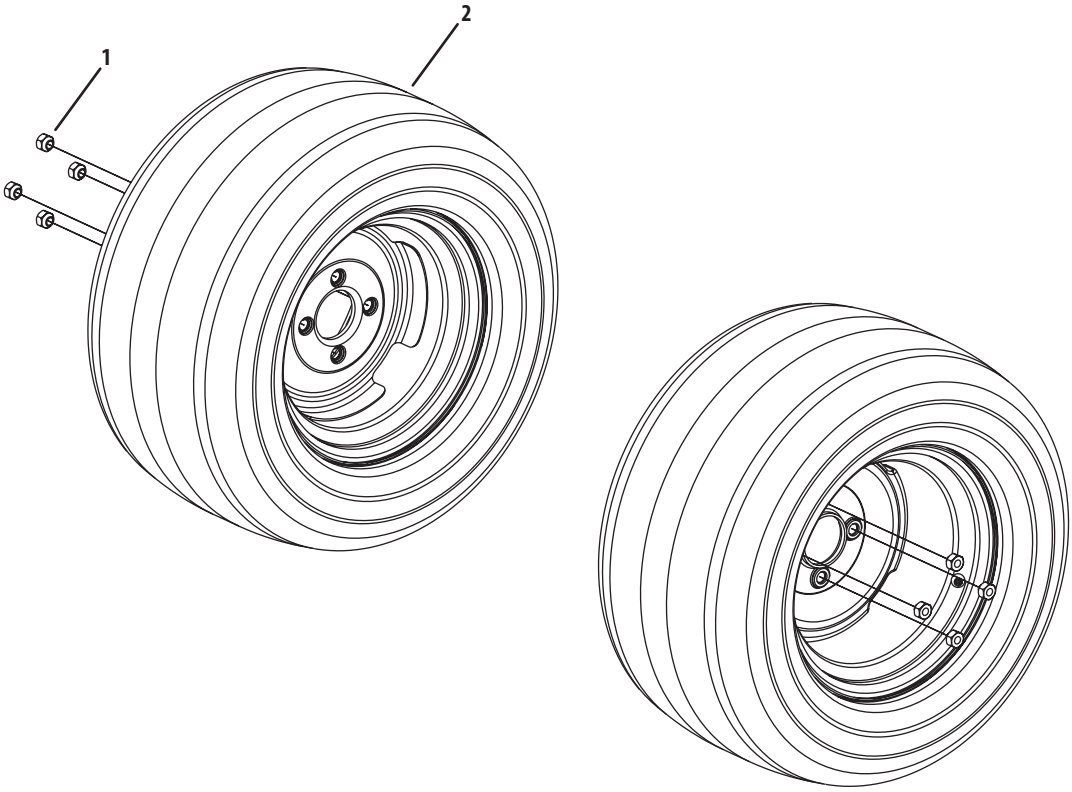

Ref.	Part Number	Description
1	00012187	Lug Nut, 1/2-20
2	02002666	Wheel Assembly, 23 x9.5-12, Beige Includes:
	02002104	Tire, 23 x 9.5-12
		Rim, 12 Dia x 7.00 width
	02002668	Wheel Assembly, 24 x12-12, Beige Includes:
	00073975	Tire, 24 x 12-12
		Rim, 12 Dia x 8.50 width
	01006324†	Wheel Assembly, 24 x 12-12, Turf Saver
	00073975†	Tire, 24 x 12-12, Turf Saver

† Optional Equipment

Control Assembly

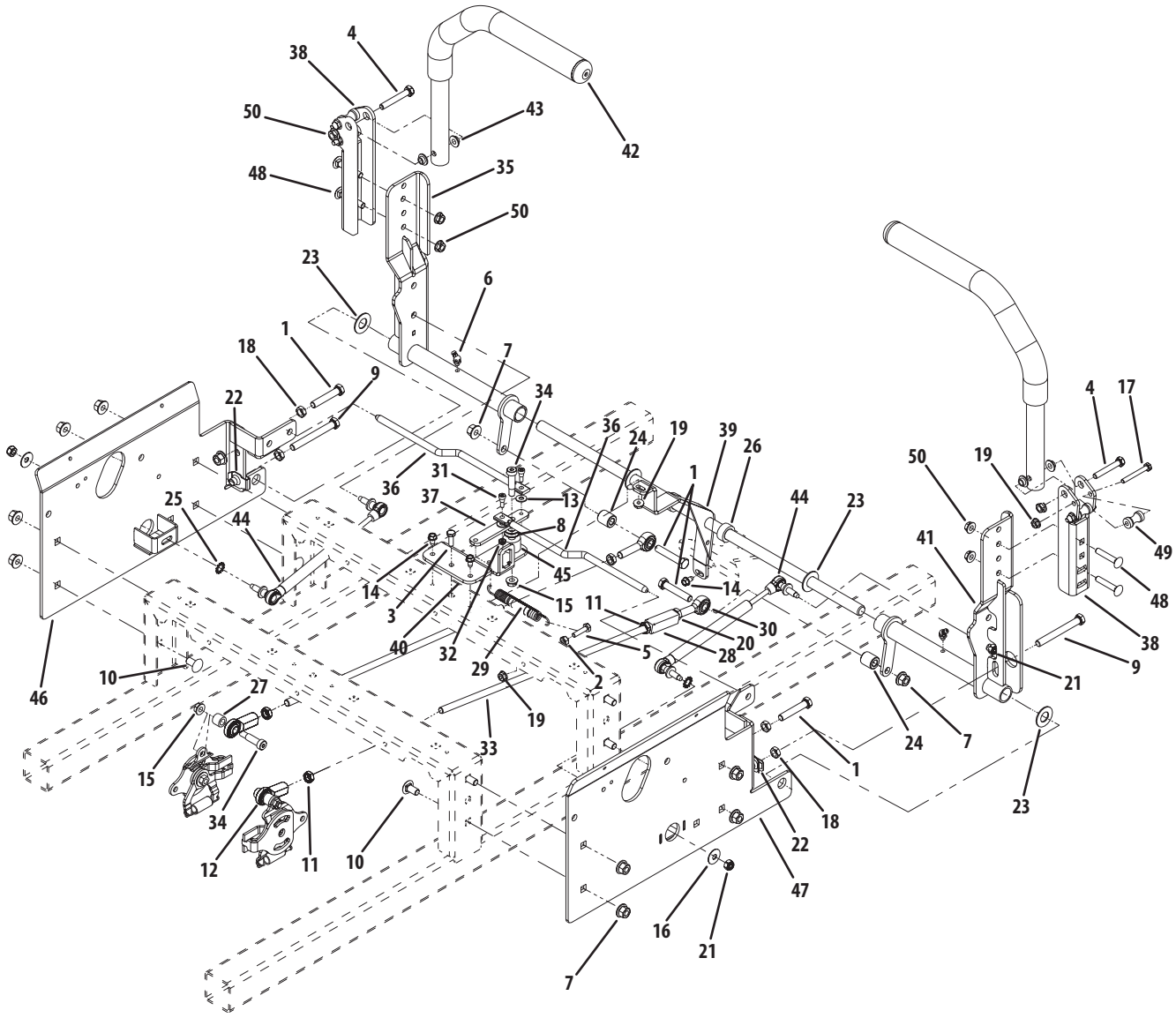

Ref.	Part Number	Description
1	00002528	Hex Cap Screw, 3/8-16 x 2.00
2	00012186	Hex Nut, 1/4-20
3	710-3015	Hex Cap Screw, 1/4-20, .75
4	00013198	Hex Cap Screw, 5/16-18 x 2.00
5	00013416	HHCS, 1/4-20 x 1.00
6	00021958	Grease Fitting, 1/4-28, 45 degree
7	00022560	Hex Nut, 3/8-16, Lock Flange
8	00061053	Washer, 3/8, SS
9	02003666	Hex Cap Screw, 3/8-16 x 3.50
10	710-3178	Carriage Bolt, 3/8-16 x .75
11	712-0711	Hex Jam Nut, 3/8-24
12	723-04080	B/Joint, 3/8-24, Right Hand Female
13	936-0463	Flat Washer, 1.4 x .630 x .0515
14	710-0599	Screw, TT, 1/4-20, 0.5, Hex Washer
15	712-3004A	Nut, Lock, HexFlange, 5/16-18
16	936-0425	Belle Washer, .325 x .930 x .045
17	01006898	Hex Cap Screw, 1/4-20 x 2.00
18	01002511	Nut, 3/8-16, Jam
19	712-04064	Hex Flange Lock Nut, 1/4-20
20	01002986	Nut, 3/8-24, Jam, LH Third
21	01003561	Nut, Hex, Center Lock, M8
22	01003947	U-Nut, 3/8-16, .75
23	01004003	Flat Washer, 5/8 Nylon
24	01004129	Spacer, .385 ID x .75 OD x .875
25	01005851	External Washer, 3/8
26	01006350	Shaft Collar
27	01007312	Spacer, .625 OD x .385 ID x 1/2

Ref.	Part Number	Description
28	01007734	Turnbuckle
29	932-0470A	Extension Spring, .53 OD x 4.75
30	01008367	B/Joint, 3/8-24, Left Hand Female
31	01009322	Shoulder Bolt, 1/4 x 1/4
32	01009377	Nut w/ Star Washer, 10-24
33	01009560	Control Rod, 3/8 x 17.312
34	02000069	Screw, Shoulder Control Rod
35	02002931	Lapbar Control Assembly, LH
	01004265	Bearing
36	02002542	Brake/Control Rod
37	02002543	Lapbar Control Arm
38	02004044	Lapbar Pivot Bracket
39	02002555	Lapbar Control Shaft Assembly
40	02004382	Lapbar/Brake Control Mounting Brkt.
41	02002932	Lapbar Control Assembly, RH
	01004265	Bearing
42	02004049	Lapbar Assembly includes:
	02002662	Grip, 1.0
43	02003419	Bushing, .310 x .172 x .688 x .06
44	02003653	Cylinder Return to Neutral
45	02003664	Spacer, .405 ID x 1.0 OD x .72
46	02003883	Side Panel, Control, Left
47	02003884	Side Panel, Control, Right
48	710-0458	Carriage Bolt, 5/16-18 x 1.75
49	02003644	Spacer, .251 ID x .38 OD x 1.13 LG
50	712-04063	Nut, Lock, HexFlange, 5/16-18

Kohler Electrical Assembly

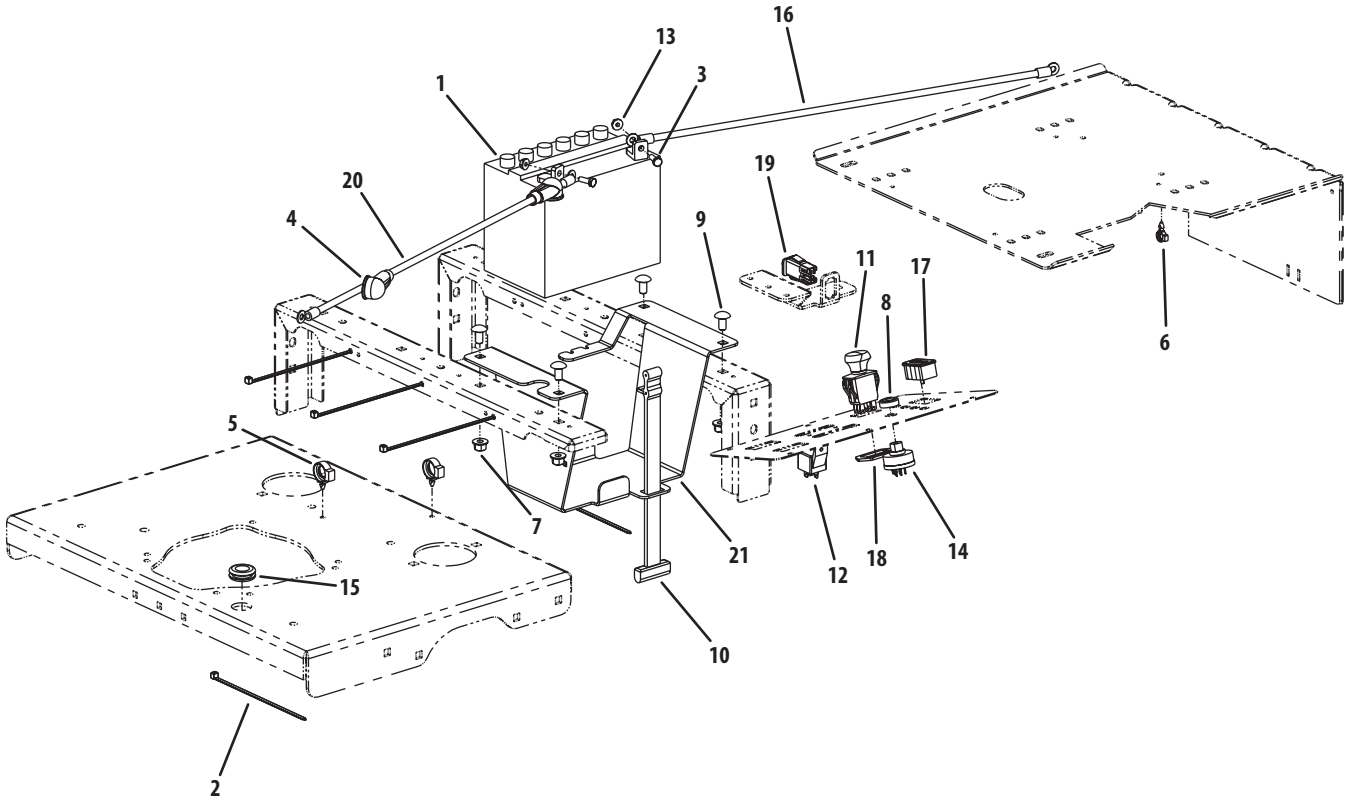

Ref.	Part Number	Description
1	925-1707D	Battery, 12V 225CCA 30 Min
2	725-0157	Tie, Cable, 3/16 x .05 x 7.4"
3	710-3015	Screw, Hex, Cap, 1/4-20 x .75
4	00013258	Boot, 1" OD Rubber Battery-PST, Red
5	02003775	Electrical Conduit Clip, 5/8
6	02003038	Electrical Conduit Clip, 3/8
7	00022560	Flange Lock, Hex Nut, 3/8-16
8	00032097	Nut, W/Cap, 5/8-32 Ignition
9	710-3178	Carriage Bolt, 3/8-16 x .75 Long
10	723-3064	Strap, Battery
11	01002111	Switch, Electric, PTO
12	01002251	Relay, 12V 40A

Ref.	Part Number	Description
13	912-3027	Lock Nut, 1/4-20
14	01003581P	Switch, Ignition, 6 Pin includes:
	725-1341B	Key
15	01004040	Grommet, .75 ID
16	01009623	Cable, Battery Red, 34"
17	925-04893	Meter, Hour
18	01009905	Bracket, PTO Switch Retainer
19	02000024P	Switch, Safety N.O./N.C.
20	02002059	Cable, Battery, Red, 42"
21	02002551	Battery Bracket
—	01001811†	Hour Meter, Harness
—	02002824†	Harness Assembly

† Not Shown

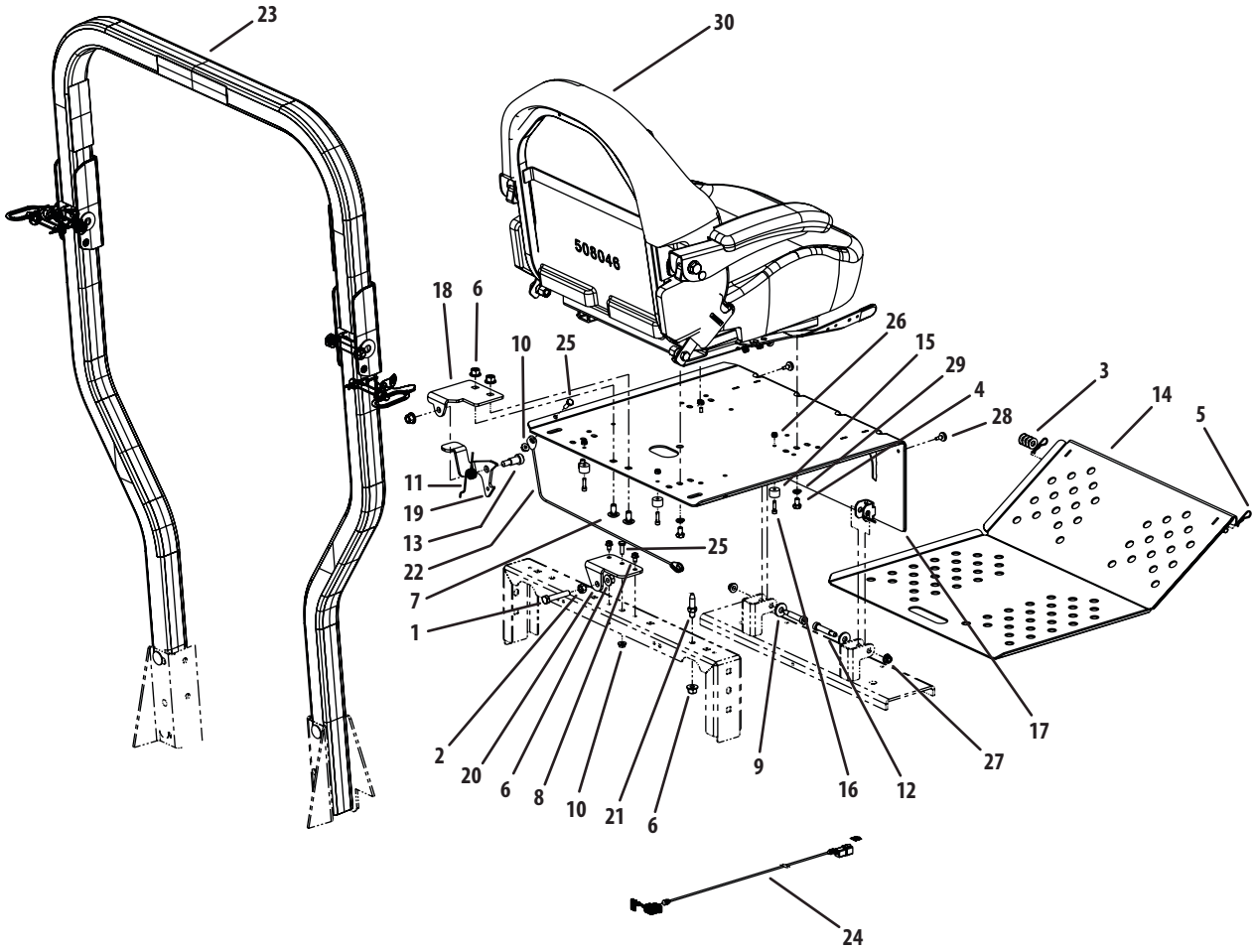

Ref.	Part Number	Description
1	00002528	Hex Cap Screw 3/8-16 x 2.00
2	912-3017	Hex Nut, 3/8-16
3	00012158	Washer
4	00012178	Hex Cap Screw, 5/16-18 x 1/2
5	00021956	Hair Pin, 3/8-1/2
6	00022560	Flange Lock, Hex Nut, 3/8-16
7	710-3178	Carriage Bolt, 3/8-16 x .75 Long
8	710-0599	Screw, TT, 1/4-20, 0.5, Hex Washer
9	736-3052	Flat Washer, .406 ID, 1.0 OD, .105
10	912-3027	Lock Nut, 1/4-20
11	01008140P	Deck Lift Spring, Left Hand
12	01009459	Shoulder Bolt, .375 x 1.50
13	02002091	Shoulder Bolt, 1/2 x 3/4, 3/8-16
14	02002334	Floor Panel Assembly
15	02002963	Rubber Stop with Washer
16	02002964	Standard Cap Screw, #10-24 x .75

Ref.	Part Number	Description
17	02003404	Seat Plate Assembly
18	02003730	Seat Latch Bracket
19	02003732	Latch Lever Bracket
20	02003738	Latch Bracket
21	02003745	Adjustable Stud
22	02004062P	Cable Support
23	02005081	Foldable Rops Assembly includes:
	02004323	Knob
	02004324	Pin, Lock
24	629-04185	Wire Harness Adaptor
25	710-3015	Screw, Hex, Cap, 1/4-20 x .75
26	712-0161	Nut, #10-24, Nylon Lock
27	712-04063	Nut, 5/16-18, Flangelock
28	935-0199A	Rubber Bumper, .62 OD x .22 Thick
29	936-0119	Lock Washer, 5/16
30	757-04147	Seat

25HP & 27HP Kohler Engine Assembly

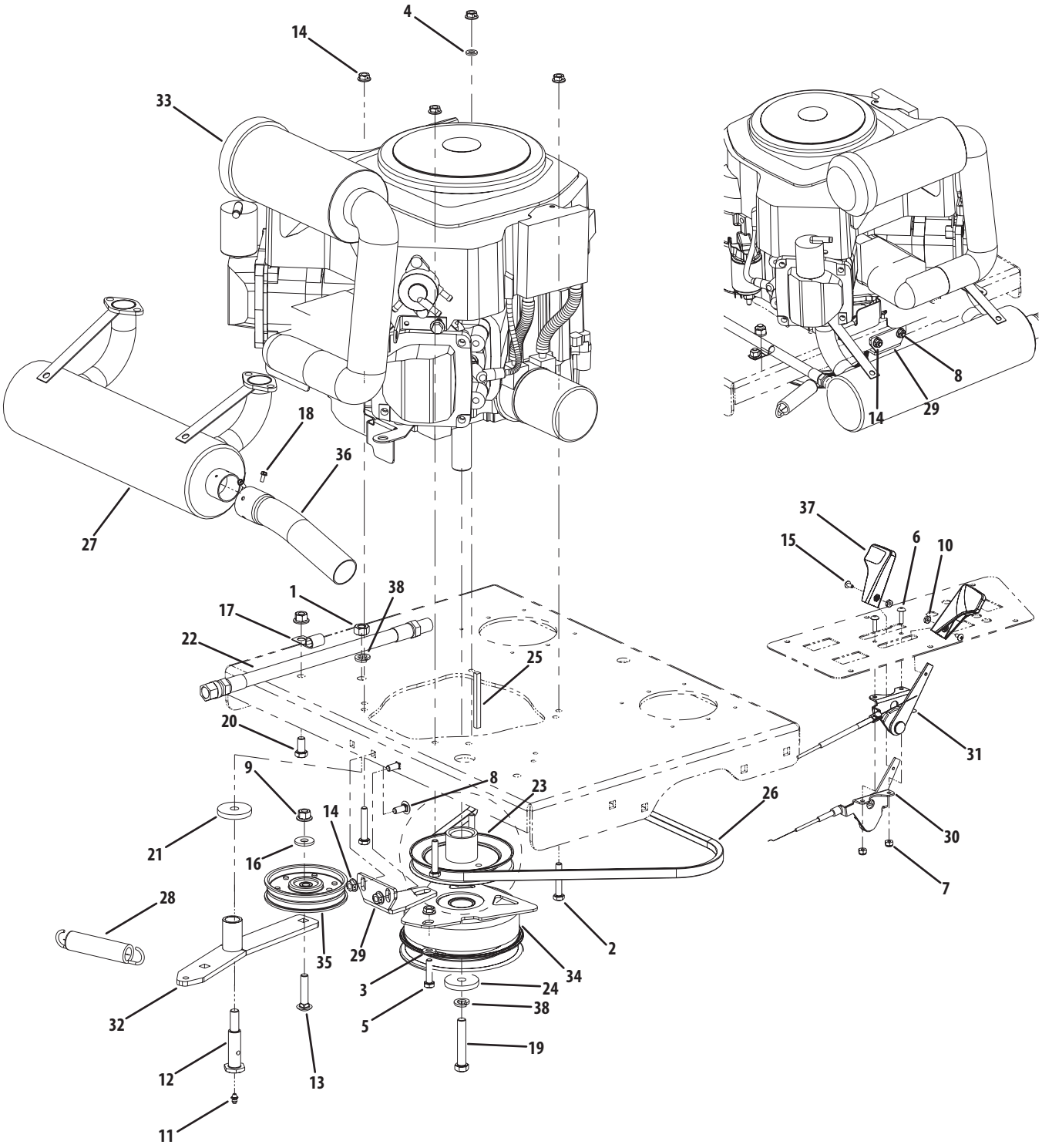

25HP & 27HP Kohler Engine Assembly

Ref.	Part Number	Description
1	912-3019	Hex Nut, 7/16-14
2	00006129	HHCS, 5/16-18, 1-3/4
3	00009812	Flat Washer, 5/16
4	00012169	Flat Washer, 5/16
5	00013116	HHCS, 5/16-18 x 1-1/4
6	00030906	Machine Screw, 10-32 x 5/8
7	00014608	Lock Nut, Nylon Insert, 10-32
8	00020508	Carriage Bolt, 5/16-18 x .75
9	00022560	Flange Lock, Hex Nut, 3/8-16
10	00060056	Nut Washer, W/Star, 8-32
11	00060078	Grease Fitting, 1/4-28 x 3/16
12	01000302	Shoulder Screw, 7/16-14
13	710-0560	Hex Carriage Screw, 3/8-16, 1.75
14	712-3004A	Hex flange Lock Nut, 5/16-18
15	710-3217	Machine Screw, 8-32, .375
16	736-3052	Flat Washer, .406 ID, 1.0 OD, .105
17	726-3008	Clip, Heat Shield Cable
18	910-0224	Screw, #10-16 x 0.500
19	01001395	Cap screw, 7/16-20 x 2.50
20	710-0216	Hex Cap Screw, 3/8-16, .750

Ref.	Part Number	Description
21	01003269	Flat Washer, 7/16 ID x 1.75 OD x .25
22	01003283	Oil Drain Hose
23	01005104	Pump Drive Pulley
24	736-04131	Flat Washer, 7/16 ID x 1.75 OD x .25
25	01005856	Key, 1/4 x 1/4 x 3
26	01007015	Belt, 51.2 Lg
27	01006566	Muffler Accessory Kohler
28	01009635	Extension Spring, .98 OD x 5.00
29	02001992	Retainer Clutch Assembly, Ogura
30	02003421	Throttle, Control Cable
31	02003423	Choke Control Cable
32	02004075	Engine Idler Arm
	01000308	Bearing
33	N/A	Engine, 27HP Kohler
	N/A	Engine, 25HP Kohler
34	02004878P	Clutch Brake, 1.125 ID
35	02005077	Flat Pulley with Flanges
36	02005082	Muffler Accessory Exhaust Tube
37	731-04914	Control Throttle Knob
38	936-0171	Lock Washer, 7/16

Lift Assembly

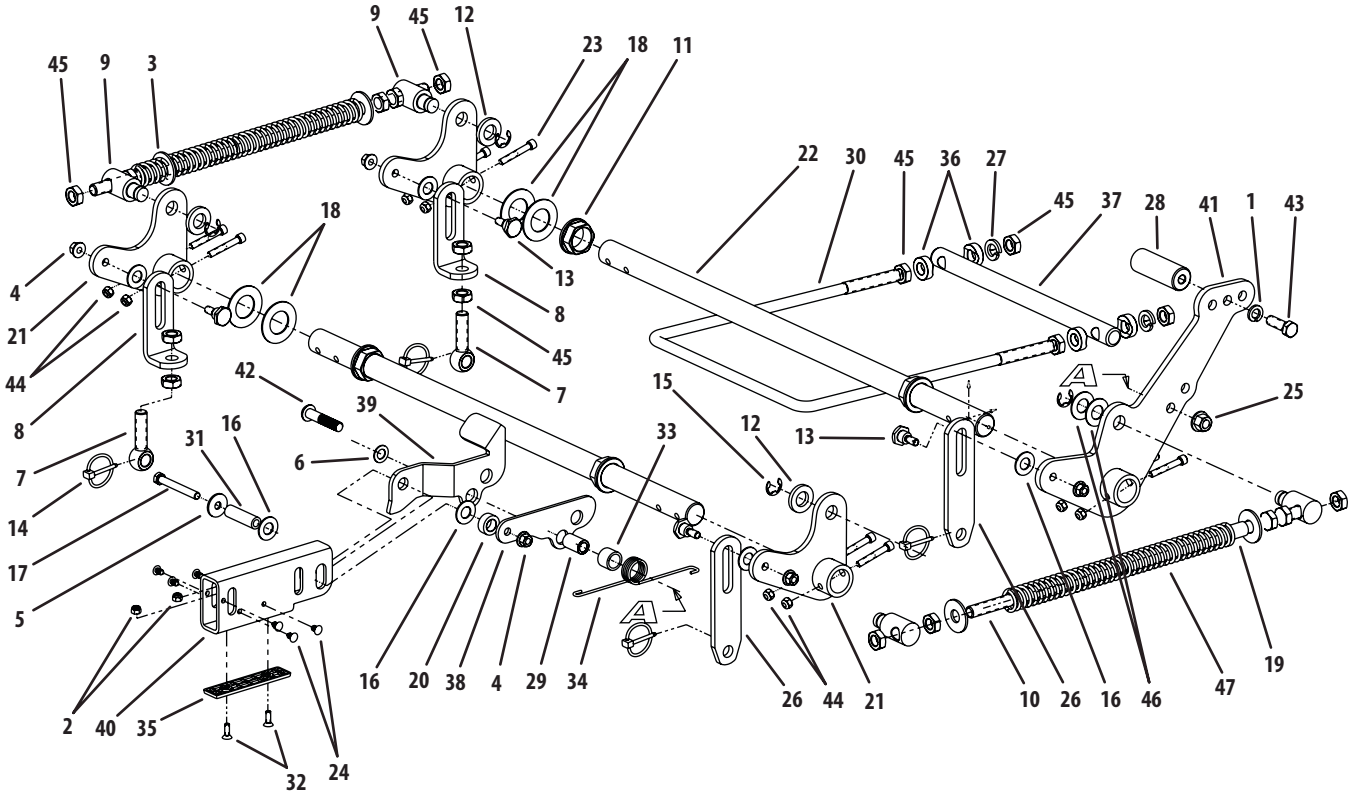

Ref.	Part Number	Description
1	936-0921	Lock Washer, 1/2
2	00012152	Lock Nut w/Nylon Insert
3	00013432	Flat Washer, 5/8
4	00022560	Hex Nut, Flange Lock, 3/8-16
5	936-0133	Flat Washer, 1.25 x .411 x .100
6	936-0160	Flat Washer, .536 ID x .930 OD x .05
7	01001744	Eye Bolt, 5/8ID
8	01001746	Eye Bolt Mount Link, 5/8 ID
9	01001855	Ferule Lift
10	01001857	Lift Connector Rod
11	01001930	Hex Flange Bearing, 1.25 ID
12	01003123	Spacer, .812 ID x .268 Lg.
13	01003535	Shoulder Screw, 0.625 OD x .437 Lg.
14	01003993	Linch Pin, 3/16 Dia.
15	01003994	E Clip, 3/4 Dia.
16	01004003	Nylon Flat Washer, 5/8
17	01004127	HHCS, 3/8-16, 3.00
18	01006408	Flat Washer, 1.25 ID
19	01006823	Hose, 5/8 ID 13/16 OD, 8" LG
20	01007527	Spacer, .630 ID x 1.06 OD x .440
21	01007680	Bellecrank Weldment Assembly
22	01007681	Deck Lift Shaft
23	01007962	Socket Head Cap Screw, 5/16-18 x 2
24	01008801	Rivet, 1/4 x 5/8

Ref.	Part Number	Description
25	01010119	Nut, 1/2-13, Flange Lock
26	02000561	Deck Link
27	02000671	Lock Washer, 5/8
28	02002596	Deck Lift Foot Pedal
29	02002655	Spacer, .51 ID x .75 OD x 1.240
30	02002879	Front Lift Rod
31	02003043	Spacer, .375 ID x .625 OD x 2.20
32	02003505	Flat Head Cap Screw, 1/4-20 x .75
33	02003586	Spacer, .76 ID x 1.0 OD x .75
34	02003588	Torsion Spring, .120 Wire x 1.32 OD
35	02003749	Lift Wear Plate
36	02003751	Spacer, .635 x 1.2 x .41
37	02004227	Pivot Rod
38	02005048	Yoke Plate
39	02005050	Lift Link Bracket
40	02005103	Lift Tube, 3.0 x 1.5
41	02005137	Deck Lift Foot Pedal Weldment
42	02005518	Cap Screw, 1/2-13 x 2.50
43	710-3181	Hex Cap Screw, 1/2-13 x 1.50
44	912-0429	Nut, 5/16-18, Nylock
45	912-3015	Jam Nut, 5/8-11
46	736-0188	Flat Washer, .76 x 1.49 x .06
47	01003318	Lift Compression Spring (48")
—	02002959	Lift Compression Spring (60")

Right Hand and Left Hand Wheel Motors

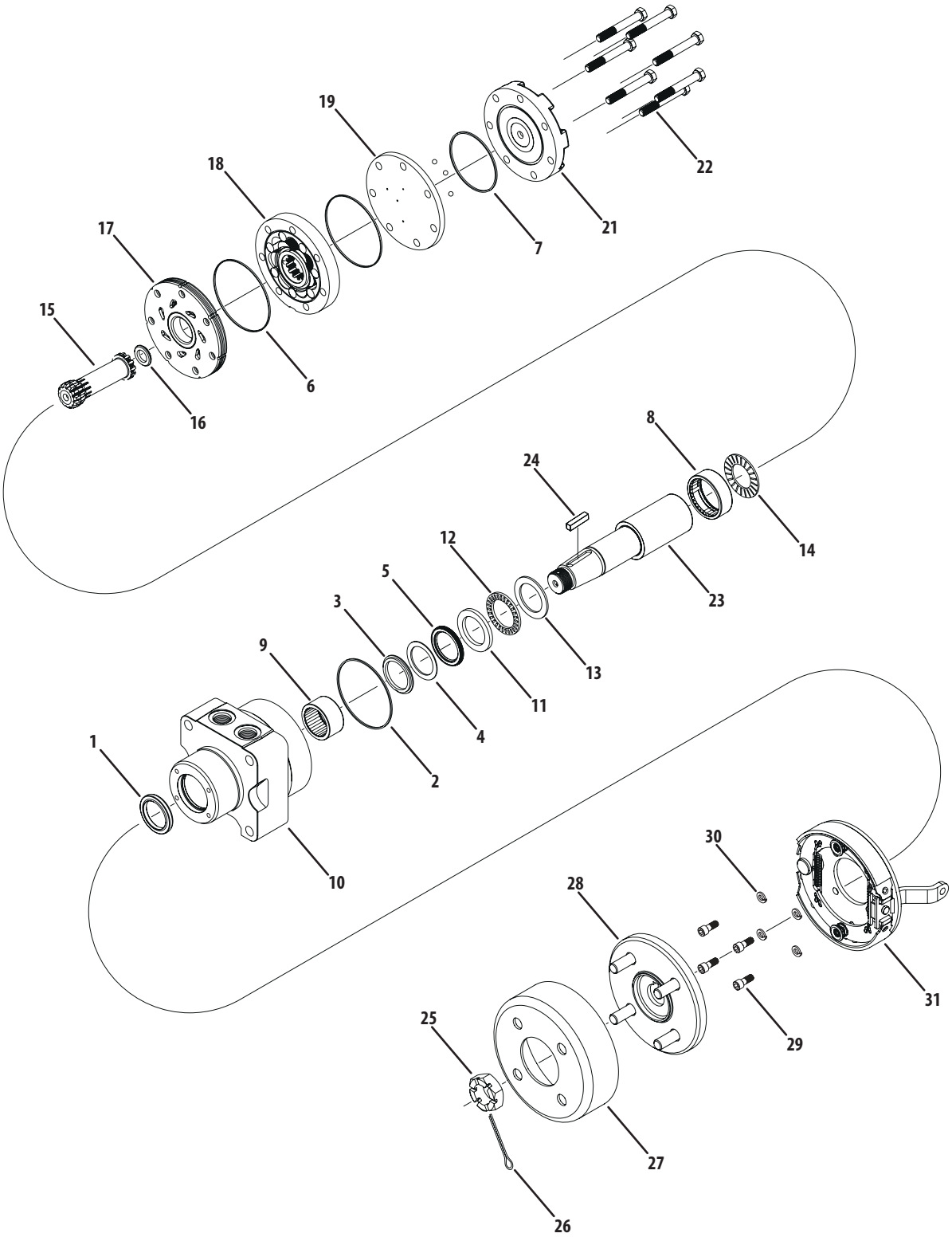

Ref.	Part Number	Description
1		Dust Seal
2		Housing Seal
3		Back Up Ring
4		Back Up Seal
5		Shaft Seal
6		Body Seals
7		Endcover Seal
8	WH-500444004	Rear Housing Bearing includes (items 1-8)
9	WH-530018000	Front Housing Bearing
10	WH-530013012	Housing
11	WH-500018283	Front Thrust Washer
12	WH-500018282	Front Thrust Bearing
13	WH-300018002	Thrust Washer
14	WH-500018059	Rear Thrust Bearing
15	WH-500014009	Drive Link
16	WH-500018185	Drive Link Spacer
17	WH-500015006	Manifold
18	WH-500147002	Rotor Set
19	WH-500012001	Balance Plate
20	WH-500018048	Steel Balls
21	WH-500016001	Endcover
22	WH-500445014	Assembly Bolts
23	WH-500011315	Shaft
24	WH-500449106	Shaft Key
25	WH-500449304	Shaft Nut
26	WH-400018015	Cotter Pin
27	WH-530018007	6" Stamped Drum
28	WH-530018005	4-Lug Knott Hub
29	WH-400180050	Mounting Bolts
30	WH-400180045	Lock Washers
31	WH-530018006	Knott Brake

Right Hand BDP-12 Hydraulic Pump

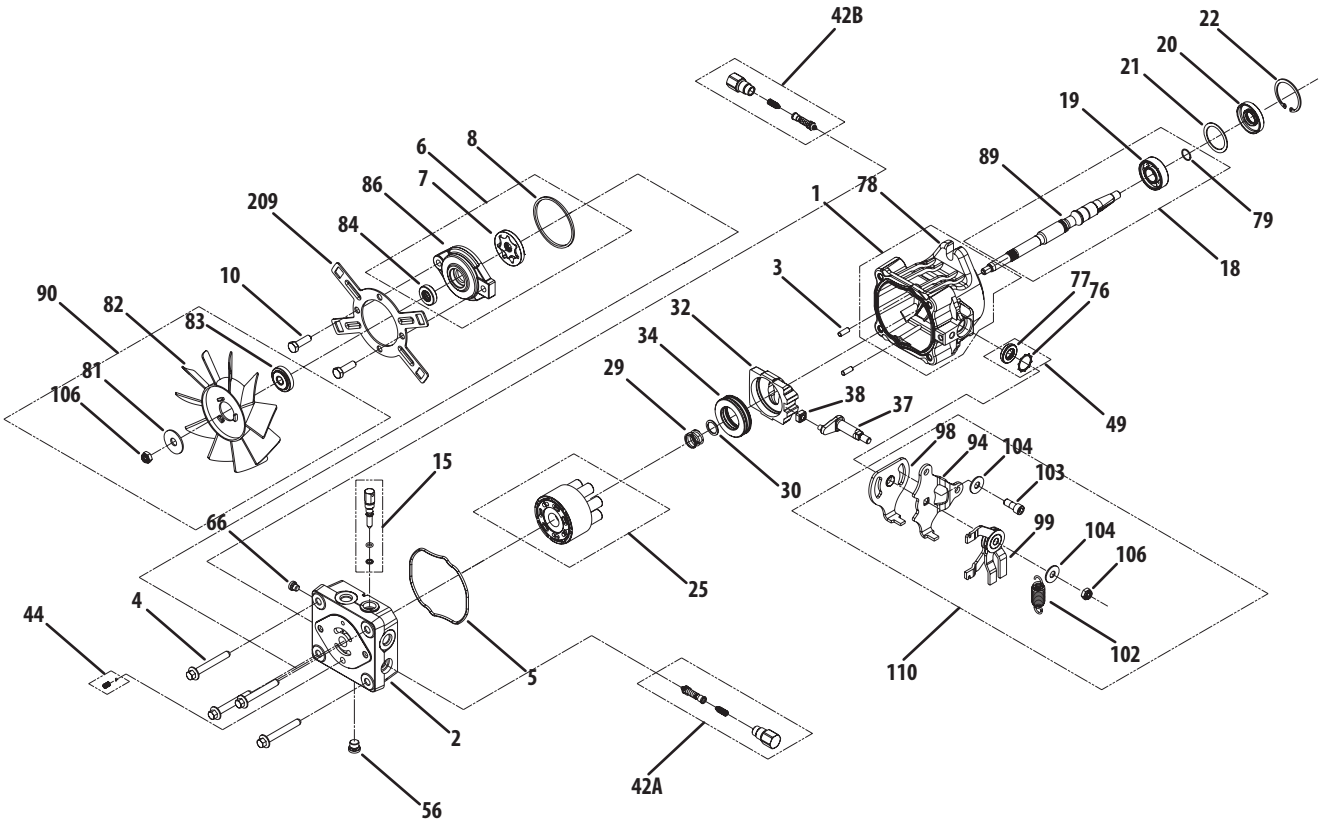

Ref.	Part Number	Description
1	HG-70797	Kit, Housing
(78)		Housing, Pump
2	HG-52038	Kit, Endcap
(66)		Plug 9/16-18 (Metal)
3	HG-50641	Straight Headless Pin
4	HG-50969	Hex Bolt M8-1.25 x 60mm Long
5	HG-52629	Housing, O-Ring
6	HG-71247	Kit, Charge Pump
(7)		Gerotor
(8)		O-Ring
(84)		Seal
(86)		Housing, Charge Pump
10	HG-9007200-3116	Screw, 5/16-18 x 1.00 Long
15	HG-71248	Kit, Bypass Valve
18	HG-71252	Kit, Pump Shaft
(19)		Bearing, Ball 17 x 40 x 12
(79)		Ring, Ret. Wire .561 I.D.
(89)		Shaft, Input Tapered Keyed
20	HG-51161	Lip Seal 17 x 40 x 7 PTC
21	HG-50951	Spacer
22	HG-50329	Retaining Ring
25	HG-71170	Cylinder Block Kit
29	HG-2003014	Block Spring
30	HG-2003017	Block Thrust Washer
32	HG-2003087	Swashplate
34	HG-50551P	Ball Thrust Bearing
37	HG-50807	Arm, Trunnion Tapered Square
38	HG-2000015	Slot Guide
42A	HG-70743	Kit, Shock Valve

Ref.	Part Number	Description
42B	HG-70743	Kit, Shock Valve
44	HG-70402	Charge Relief Kit
49	HG-2513043	Trunnion Seal / Retainer Kit
(76)		Ring, Ret. -Star Wash 1.0
(77)		Seal, Lip 12 x 25 x 5
56	HG-9005110-4400	Plug - 7/16-18 Steel (Diagnostic)
90	HG-71172	Kit, Fan
(81)		Washer, .40 x 1.55 x .06
(82)		Fan, 6", 10 Blade
(83)		Fan Hub
(106)		Nut, Lock, Side 5/16-24UNF-2B
100	HG-70525	Overhaul Seal Kit
(5)		O-Ring, Housing
(8)		O-Ring
(20)		Seal, Lip 17 x 40 x 7
(22)		Ring, Retaining
(76)		Ring, Retaining
(77)		Seal, Lip 12 x 25 x 5
209	HG-52016	Bracket, Shroud
110	HG-70794	Kit, RTN
(94)		Arm, Control
(98)		Arm, RTN
(99)		Assembly, RTN Bi-Directional
(102)		Spring, Extension (STD)
(103)		Screw, 5/16-24 x .75 (Patch)
(104)		Washer
(106)		Nut, Lock, Side 5/16-24UNF-2B
209	HG-52016	Bracket, Shroud

Left Hand BDP-12 Hydraulic Pump

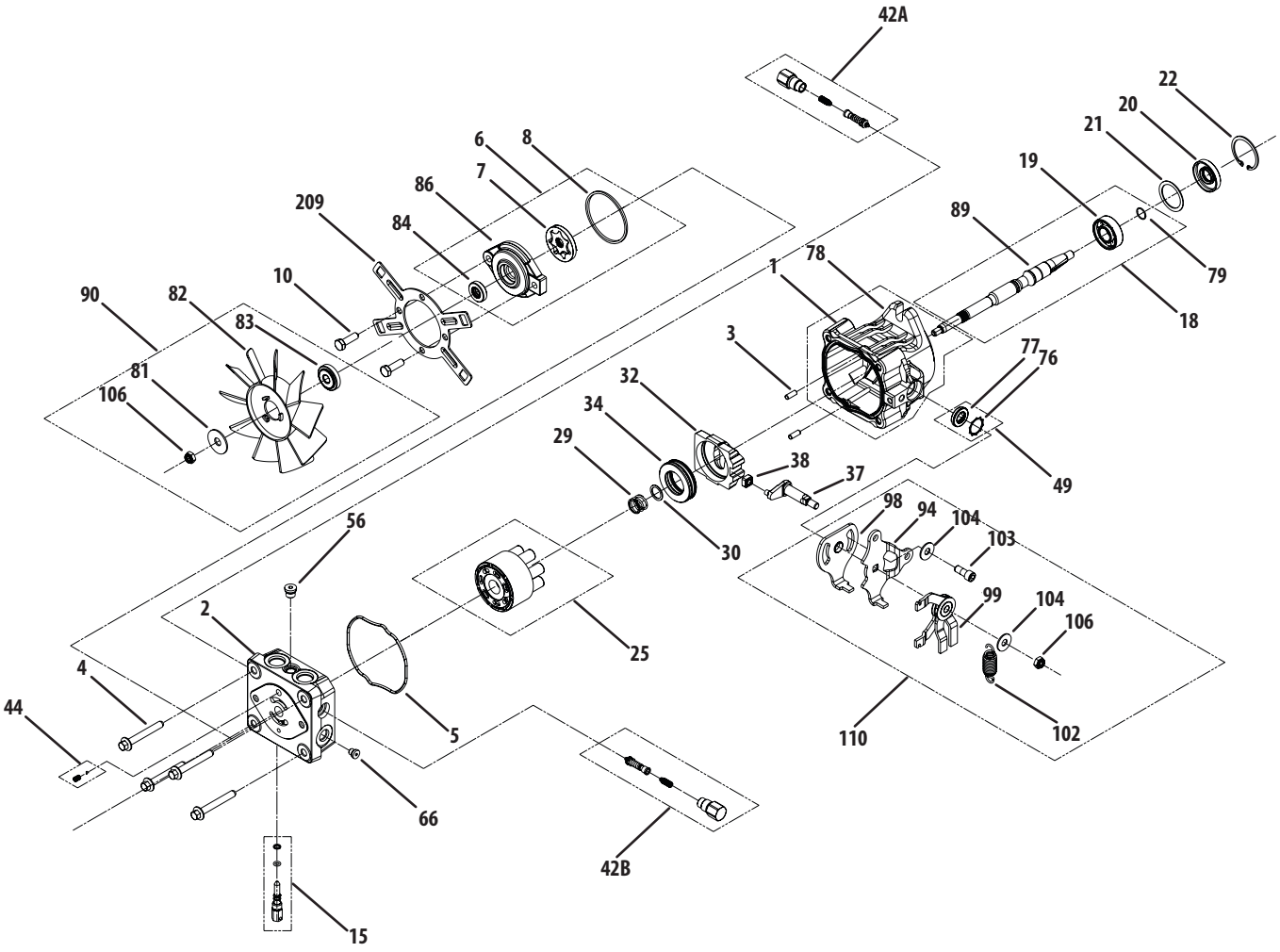

Ref.	Part Number	Description
1	HG-70797	Kit, Housing
(78)		Housing, Pump
2	HG-52038	Kit, Endcap
(66)		Plug 9/16-18 (Metal)
3	HG-50641	Straight Headless Pin
4	HG-50969	Hex Bolt M8-1.25 x 60mm Long
5	HG-52629	Housing, O-Ring
6	HG-71247	Kit, Charge Pump
(7)		Gerotor
(8)		O-Ring
(84)		Seal
(86)		Housing, Charge Pump
10	HG-9007200-3116	Screw, 5/16-18 x 1.00 Long
15	HG-71248	Kit, Bypass Valve
18	HG-71252	Kit, Pump Shaft
(19)		Bearing, Ball 17 x 40 x 12
(79)		Ring, Ret. Wire .561 I.D.
(89)		Shaft, Input Tapered Keyed
20	HG-51161	Lip Seal 17 x 40 x 7 PTC
21	HG-50951	Spacer
22	HG-50329	Retaining Ring
25	HG-71170	Cylinder Block Kit
29	HG-2003014	Block Spring
30	HG-2003017	Block Thrust Washer
32	HG-2003087	Swashplate
34	HG-50551P	Ball Thrust Bearing
37	HG-50807	Arm, Trunnion Tapered Square
38	HG-2000015	Slot Guide
42A	HG-70743	Kit, Shock Valve

Ref.	Part Number	Description
42B	HG-70743	Kit, Shock Valve
44	HG-70402	Charge Relief Kit
49	HG-2513043	Trunnion Seal / Retainer Kit
(76)		Ring, Ret. -Star Wash 1.0
(77)		Seal, Lip 12 x 25 x 5
56	HG-9005110-4400	Plug - 7/16-18 Steel (Diagnostic)
90	HG-71172	Kit, Fan
(81)		Washer, .40 x 1.55 x .06
(82)		Fan, 6", 10 Blade
(83)		Fan Hub
(106)		Nut, Lock, Side 5/16-24UNF-2B
100	HG-70525	Overhaul Seal Kit
(5)		O-Ring, Housing
(8)		O-Ring
(20)		Seal, Lip 17 x 40 x 7
(22)		Ring, Retaining
(76)		Ring, Retaining
(77)		Seal, Lip 12 x 25 x 5
209	HG-52016	Bracket, Shroud
110	HG-70794	Kit, RTN
(94)		Arm, Control
(98)		Arm, RTN
(99)		Assembly, RTN Bi-Directional
(102)		Spring, Extension (STD)
(103)		Screw, 5/16-24 x .75 (Patch)
(104)		Washer
(106)		Nut, Lock, Side 5/16-24UNF-2B
209	HG-52016	Bracket, Shroud

Electrical Schematic

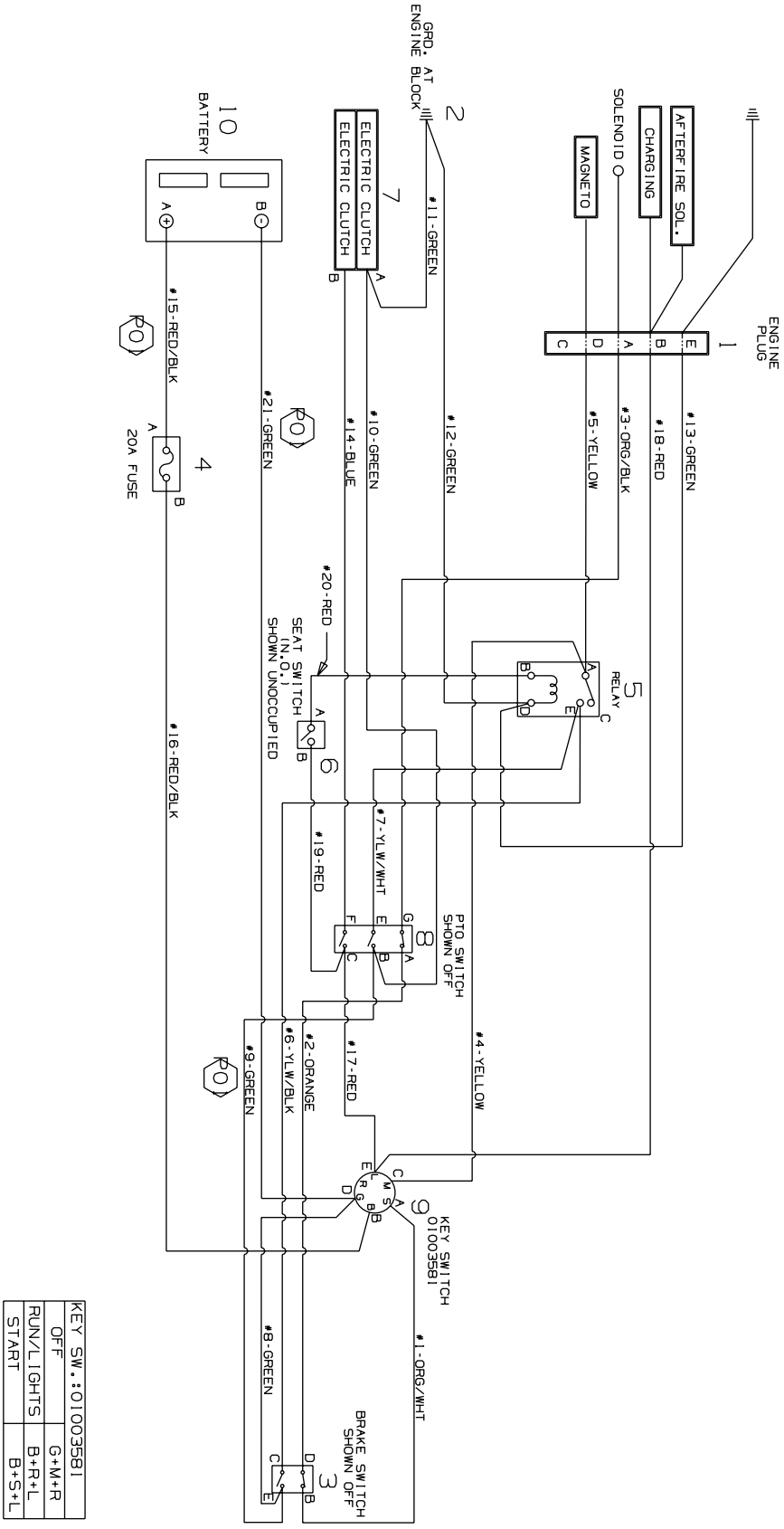

KEY SW.:01003581	
OFF	G+M+R
RUN/LIGHTS	B+R+L
START	B+S+L

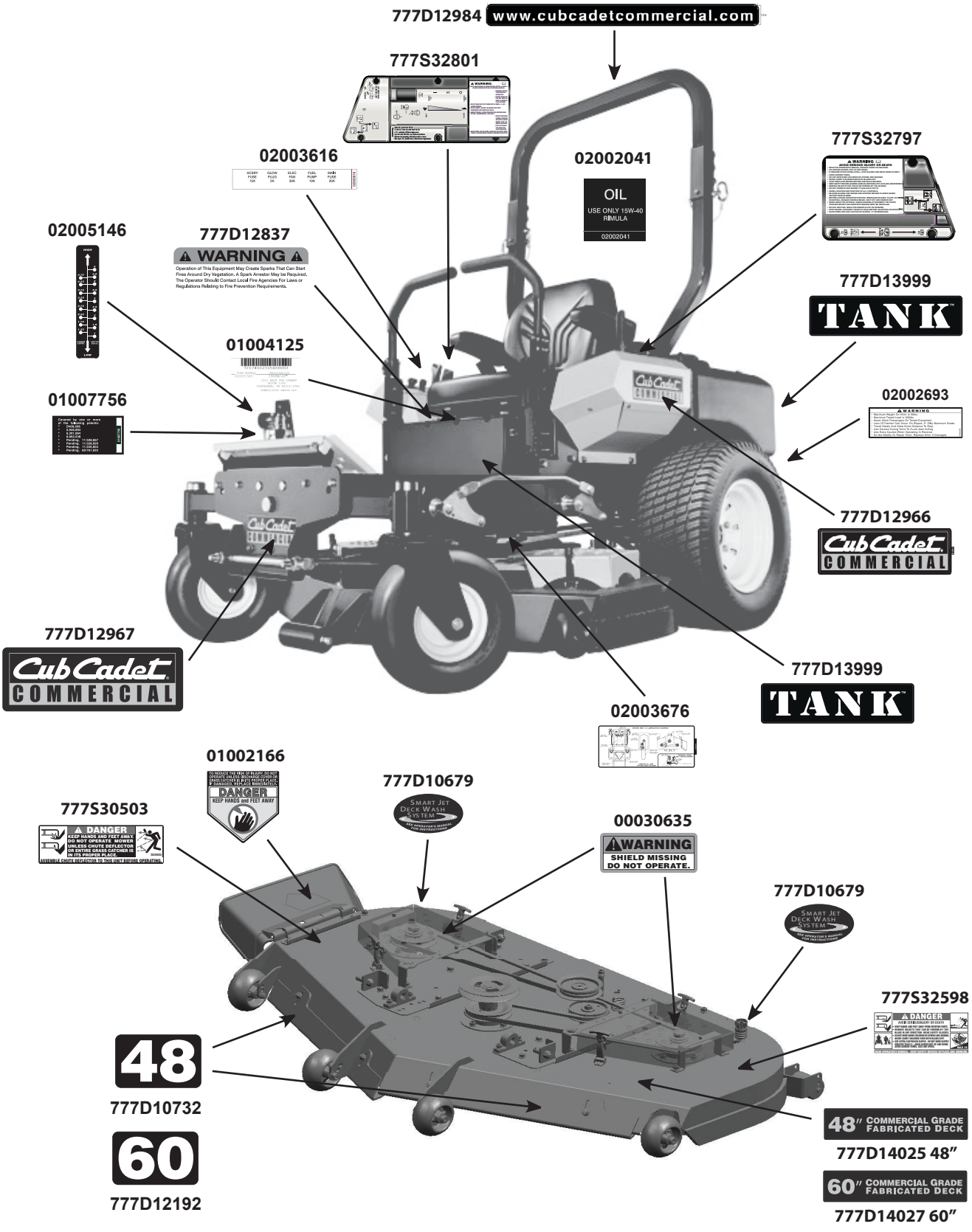
777D12984
www.cubcadetcommercial.com
777S32801
02003616
02002041
OIL
USE ONLY 15W-40
RIMULA
02002041
777S32797
02005146
777D12837
WARNING
Operation of This Equipment May Create Sparks That Can Start Fires Around Dry Vegetation. A Spark Arrestor May be Required. The Operator Should Contact Local Fire Agencies For Laws or Regulations Relating to Fire Prevention Requirements.
777D13999
TANK
01004125
01007756
02002693
777D12966
Cub Cadet
COMMERCIAL
777D12967
Cub Cadet
COMMERCIAL
777D13999
TANK
02003676
01002166
DANGER
KEEP HANDS and FEET AWAY
777D10679
SMART JET DECK WASH SYSTEM
777S30503
DANGER
KEEP HANDS AND FEET AWAY
DO NOT OPERATE MOWER
UNLESS CHUTE DEFLECTOR
OR ENTIRE GRASS CATCHER IS
IN ITS PROPER PLACE
00030635
WARNING
SHIELD MISSING
DO NOT OPERATE.
777D10679
SMART JET DECK WASH SYSTEM
777S32598
DANGER
48
777D10732
60
777D12192
48" COMMERCIAL GRADE FABRICATED DECK
777D14025 48"
60" COMMERCIAL GRADE FABRICATED DECK
777D14027 60"

Kohler CV730-3130 Crankcase

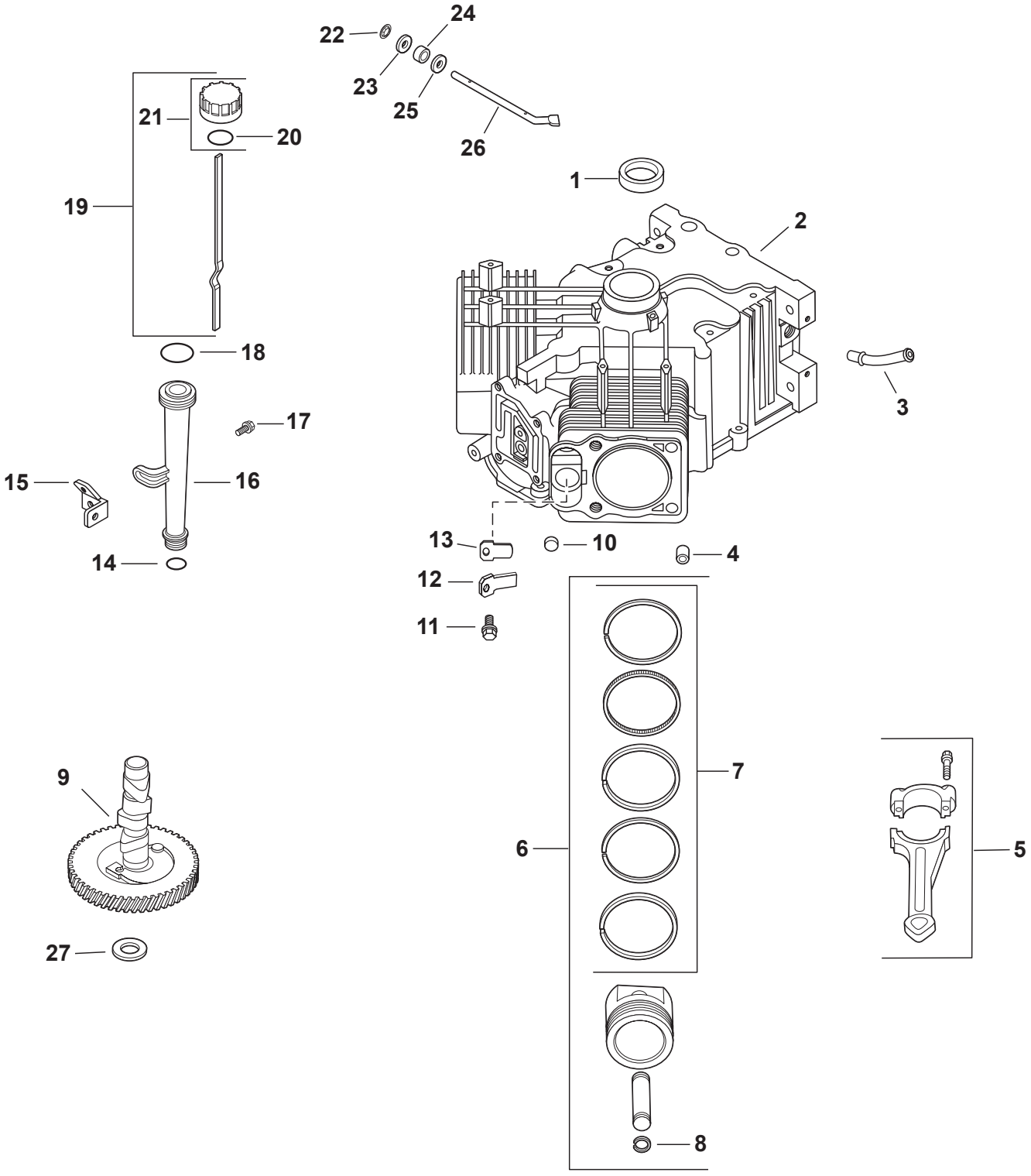

Ref.	Part Number	Description
1	KH-24-032-19-S	Seal, Oil
2		Crankcase (Use: Shortblock or Miniblock)
3	KH-24-294-13	Fitting
4	KH-24-380-16-S	Pin, Locating
5	KH-24-067-28-S	Connecting Rod (STD)
	KH-24-067-29-S	Connecting Rod (.25)
6	KH-25-874-01-S	Kit, Piston w/ Ring (STD) (Includes 7, 8)
	KH-25-874-02-S	Kit, Piston w/ Ring (.08)
	KH-24-874-03-S	Kit, Piston w/ Ring (.25)
	KH-24-874-04-S	Kit, Piston w/ Ring (.50)
7	KH-24-108-14-S	Ring Set, Piston (STD)
	KH-24-108-15-S	Ring Set, Piston (.08)
	KH-24-108-16-S	Ring Set, Piston (.25)
	KH-24-108-17-S	Ring Set, Piston (.50)
8	KH-24-018-01-S	Retainer, Piston Pin
9	KH-24-012-16-S	Kit, Camshaft
10	KH-52-139-09-S	Plug, Cup
11	KH-M-0545010	Screw, Flg Thd Frm M5x0.8x10
12	KH-24-018-04-S	Retainer, Breather Reed
13	KH-24-402-05-S	Reed, Breather
14	KH-12-153-01-S	O-Ring, Lower Oil Fill Tube
15	KH-24-126-19	Bracket, Oil Fill Tube
16	KH-32-755-04-S	Tube, Oil Fill Assembly
17	KH-M-545016-S	Screw, Flg Thd Frm M5x0.8x16
18	KH-12-153-02-S	O-Ring, Upper Oil Fill Tube
19	KH-24-038-04-S	Dipstick, Assy (Includes 20, 21)
20	KH-25-153-02-S	O-Ring, Dipstick
21	KH-24-755-46	Kit, Oil Fill Cap (Yellow)
22	KH-24-018-09-S	Retainer, Ring
23	KH-M-931010-S	Washer, Flat 9MM
24	KH-28-032-09-S	Seal, Governor Cross Shaft
25	KH-24-468-15-S	Washer, Flat 1/4" (Bottom)
26	KH-24-144-38-S	Shaft, Governor Cross
27	KH-12-422-07-S	Camshaft Shim (White .028”)

Kohler CV730-3130 Crankshaft

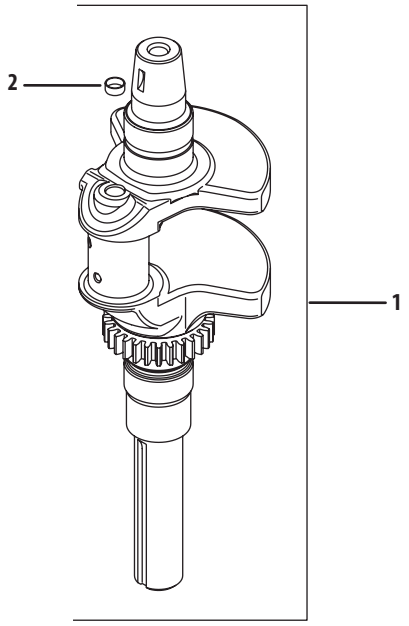

Ref.	Part Number	Description
1	KH-24-014-345-S	Crankshaft (Includes 2)
2	KH-52-139-09-S	Plug, Cup

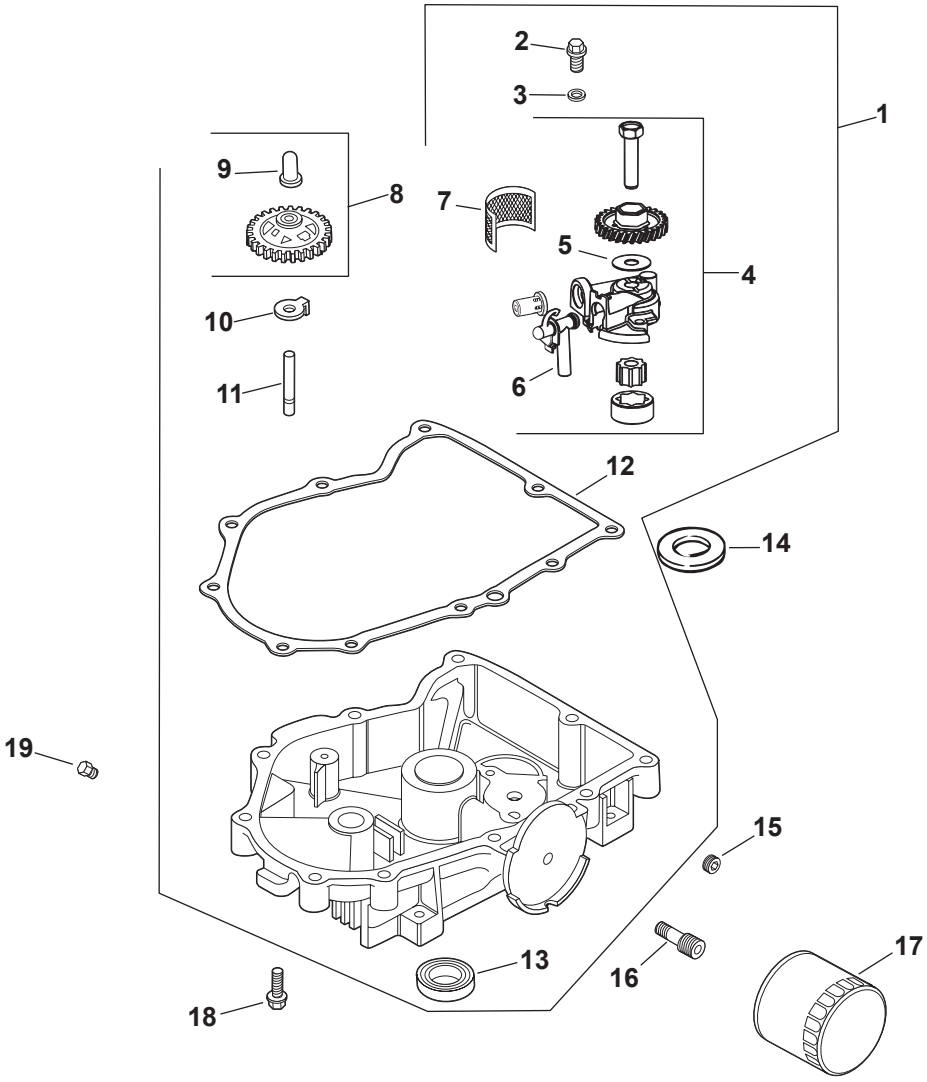

Ref.	Part Number	Description
1	KH-24-199-21-S	Kit, Oil Pan Assembly (Inc. 2-13)
2	KH-M-645025-S	Screw, Flg Thd Frm M6X1.0X25
3	KH-M-631005	Washer, Flat 6MM
4	KH-24-393-51-S	Kit, Oil Pump Assembly (Inc. 5, 6)
5	KH-24-153-01	O-Ring, Oil Pick-Up
6	KH-24-381-11-S	Tube, Oil Pick-Up
7	KH-24-162-26-S	Screen, Oil
8	KH-24-043-12	Kit, Governor Gear w/ Pin (Includes 9)
9	KH-12-380-01	Pin, Governor Regulating
10	KH-24-448-01-S	Tab, Locking

Ref.	Part Number	Description
11	KH-12-144-02	Shaft, Governor Gear
12	KH-24-041-54-S	Kit, Oil Pan GSKT (Select-A-Seal)
13	KH-25-032-06-S	Seal, Oil
14	KH-24-422-03-S	Shim, Thrust
15	KH-25-139-62-S	Plug, Pipe CTSK 3/8"
16	KH-24-136-01	Nipple, Oil Filter
17	KH-12-050-01-S	Filter, Oil
18	KH-24-086-17-S	Screw, Flg M8x1.25x45
19	KH-52-139-02	Plug, Hd Pipe 3/8"

Kohler CV730-3130 Head/Valve/Breather

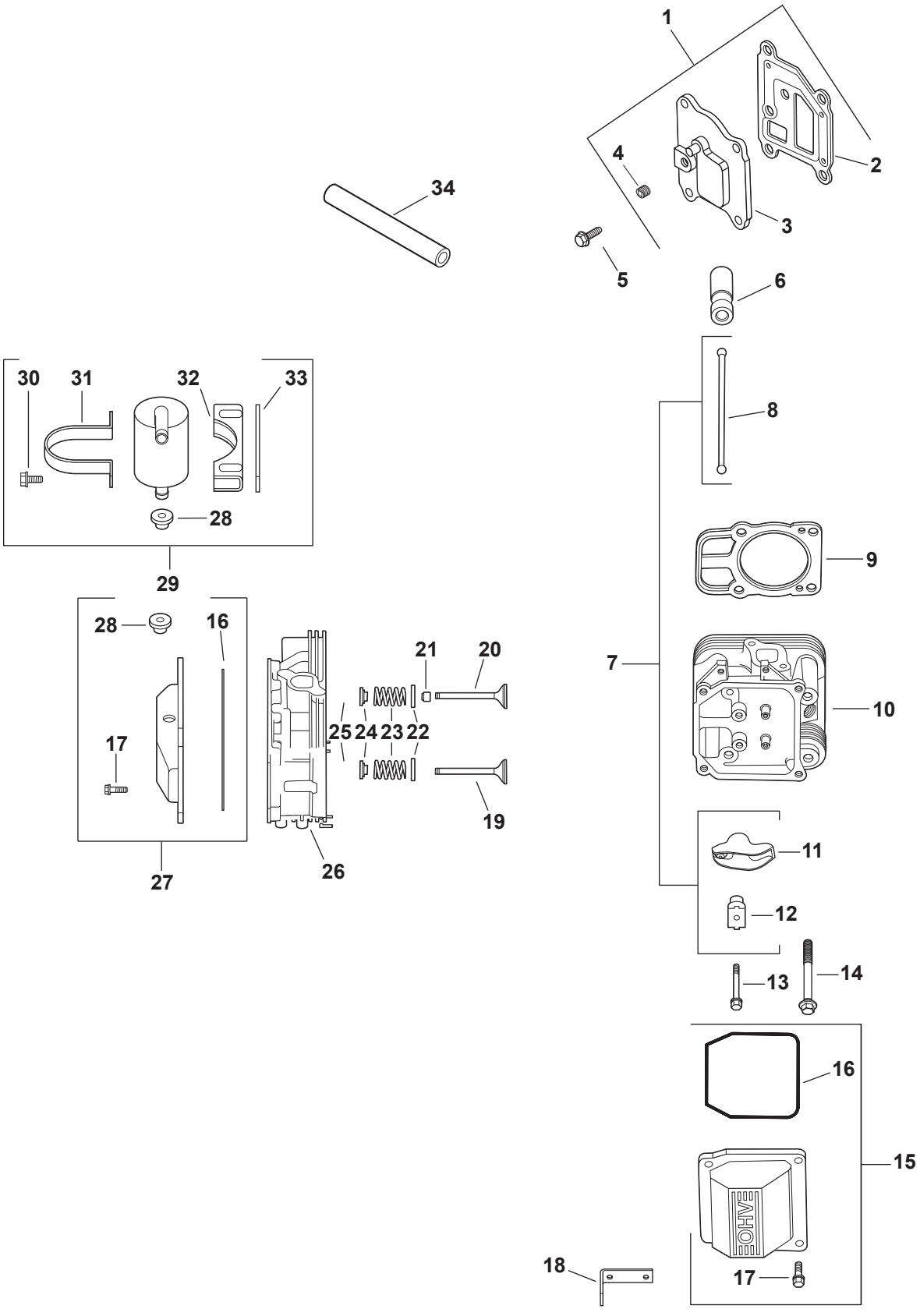

Ref.	Part Number	Description
1	KH-24-033-03	Kit, Breather Cover W/Gasket
		(Includes 2,3)
2	KH-24-041-67-S	Gasket, Breather
3	KH-24-096-87-S	Cover, Breather
4	KH-25-139-60-S	Pipe Plug, 1/8"
5	KH-M-645020-S	Screw, Flg Thd Frm M6x1.0x20
6	KH-25-351-07-S	Kit, Hydraulic Valve Lifter
7	KH-24-755-66	Kit, Valve Train (Includes 8,11,12)
8	KH-24-411-05	Rod, Push
9	KH-24-841-03-S	Kit, Cylinder Head Gasket
		(Includes Head Mtg Hdwe)
10	KH-24-318-116-S	Kit, #2 Cylinder Head Assy
11	KH-25-186-01	Arm, Rocker
12	KH-24-599-02-S	Pivot, Rocker Arm
13	KH-62-086-08-S	Screw, Flg M10x1.5x90
14	KH-M-640034-S	Screw, Flg M6x1.0x34
15	KH-24-755-141-S	Kit, Valve Cover-Plain (Inc. 15 & 16)
16	KH-24-153-30-S	O-Ring, Valve Cover
17	KH-M-651030-S	Screw, Flg M6x1.0x30
18	KH-25-445-01-S	Strap, Lifting
19	KH-24-016-01	Valve, Exhaust (Std)
	KH-24-016-02	Valve, Exhaust (.25)
20	KH-24-017-01	Valve, Intake (Std)
	KH-24-017-02	Valve, Intake (.25)
21	KH-66-032-05-S	Seal, Valve Stem

Ref.	Part Number	Description
22	KH-235011-S	Retainer, Spring
23	KH-24-089-02	Spring, Valve
24	KH-12-173-28-S	Cap, Valve Spring
25	KH-12-755-03	Kit, Retainer
26	KH-24-318-108-S	Kit, #1 Cylinder Head Assy
27	KH-24-755-142-S	Kit, Breather Rocker Cover
		(Includes 16,17,28)
28	KH-25-313-03-S	Grommet, Rubber
29	KH-24-755-57-S	Kit, Breather Separator
		(Inc. 28, 30-33)
30	KH-M-545016-S	Screw, Flg Thd Frm M5x0.8x16
31	KH-24-445-02	Strap, Breather
32	KH-24-126-44	Bracket, Breather Separator
33	KH-24-112-12	Spacer
34	KH-24-326-63-S	Hose, Breather
—	KH-M-645016-S	Screw, Flg Thd Frm M6x1.0x16
—	KH-M-645020-S	Screw, Flg Thd Frm M6x1.0x20
—	KH-25-357-14-S	Lubricant, Camshaft
—	KH-25-072-04	Stud, M8x1.25x33
—	KH-24-755-147-S	Kit, Cylinder Head Hardware
		(Not Shown)
		(Services 1 Head. Quantities Listed
		Are For Both Heads)
		(Includes 8,11,12,14,19-25)

Kohler CV730-3130 Ignition/Electrical

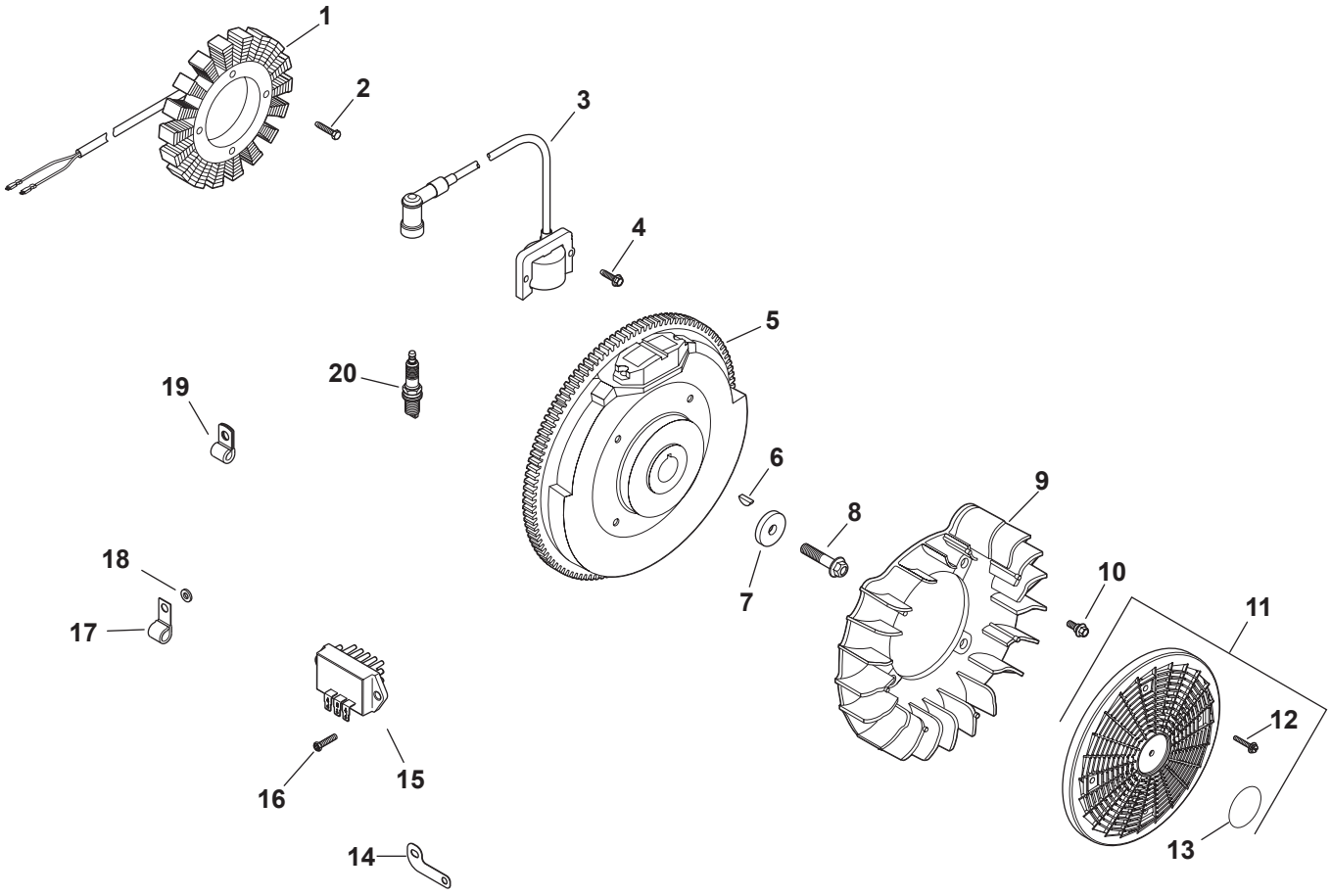

Ref.	Part Number	Description
1	KH-237878	Kit, 15 Amp Stator
2	KH-M-548025-S	Screw, Thd Frm M5x0.8x25
3	KH-24-584-45-S	Kit, Module Ignition (CDI Fixed)
4	KH-M-545020-S	Screw, Flg Thd Frm M5x0.8x20
5	KH-24-025-59-S	Flywheel
6	KH-X-42-15	Key, 3/16" X 5/8"
7	KH-12-468-03	Washer, Flat 13/32"
8	KH-12-086-14	Screw, Flg M10x1.5x45
9	KH-24-157-12-S	Fan
10	KH-25-086-47	Shoulder Bolt
11	KH-54-755-15	Kit, Grass Screen
12	KH-25-086-117-S	Screw, Flg Sems M4x.7x25
13	KH-24-113-18-S	Decal, Grass Screen
14	KH-24-126-137-S	Bracket, Ground Strap
15	KH-25-403-21-S	Rectifier Regulator
16	KH-25-086-157-S	Screw, Hex Flange Hi-Lo
17	KH-235173	Clip, Cable
18	KH-X-25-63	Washer, Flat 1/4"
19	KH-210281-S	Clip
20	759-3336	Plug, Spark
—	KH-24-176-150-S*	Harness, Wiring
—	KH-24-176-41*	Lead, Duplex
—	KH-25-454-07-S*	Tie
—	KH-25-518-34-S*	Lead, 20/25 Amp B+

* Not Shown

Kohler CV730-3130 Blower Housing & Baffles

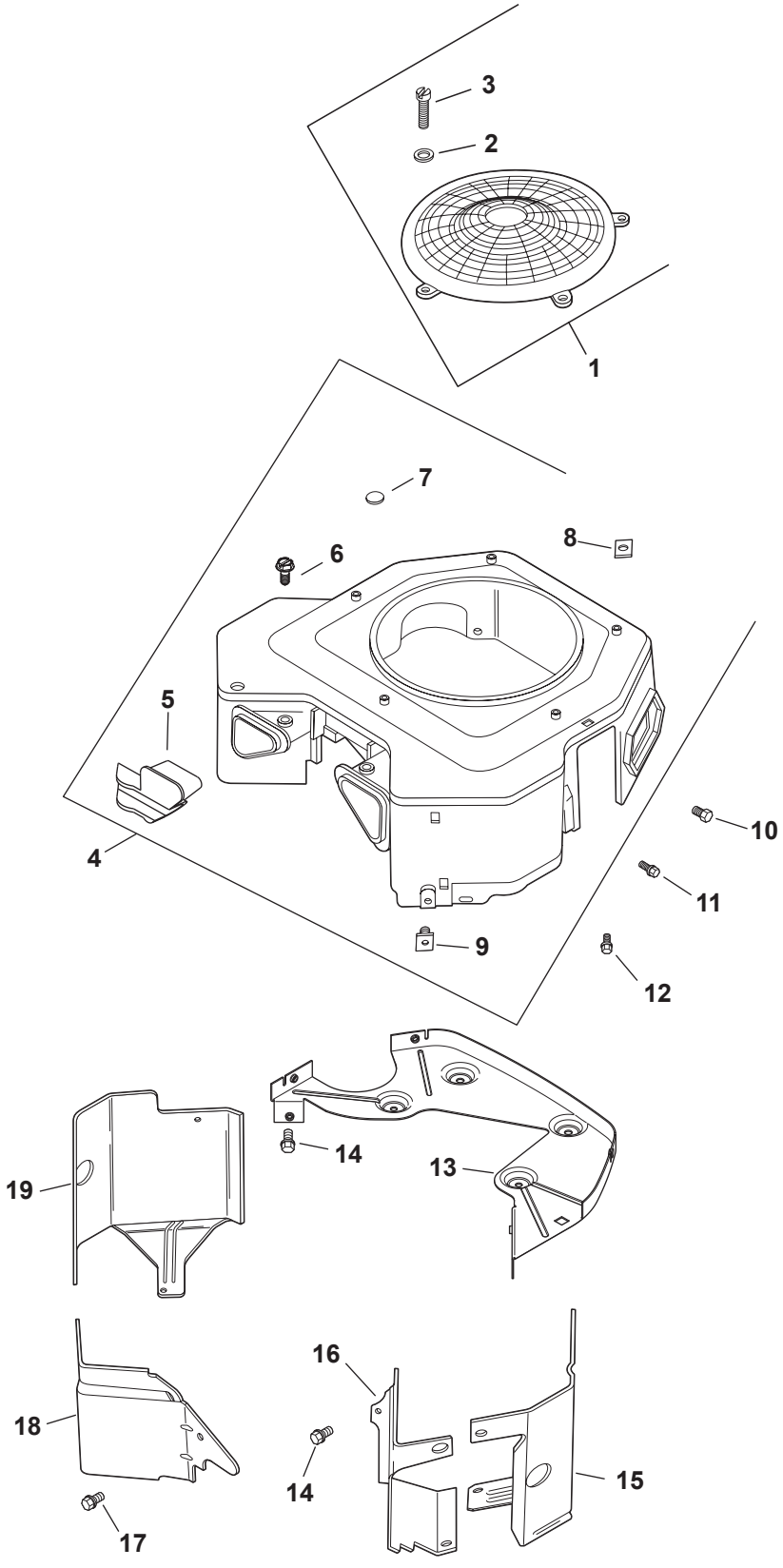

Ref.	Part Number	Description
1	KH-24-755-81-S	Kit, Guard
		(Includes 2,3 & 24 113 18-S, 24 332 01-S)
2	KH-24-468-10	Washer, Flat 7/32
3	KH-24-086-35-S	Screw, Lbd Skt Pan M5x0.8x10
4	KH-24-027-197	Kit Blower Housing Assembly
		(Inc. 5-9 & 24 332 01-S)
5	KH-24-096-85-S	Cover, Blower Housing-Molded
6	KH-25-086-91-S	Screw, WSH HD Tap #8-18 x 1/2"
7	KH-25-139-16	Plug, Button 9/16
8	KH-24-100-02-S	Nut, Plastic
9	KH-24-100-37-S	Nut, Plastic
10	KH-M-561016-S	Screw, Flg Thd Frm M5x0.8x16
11	KH-M-545016-S	Screw, Flg Thd Frm M5x0.8x16
12	KH-M-545020-S	Screw, Flg Thd Frm M5x0.8x20
13	KH-24-146-59-S	Kit, Backing Plate (Inc. M-561016-S)
14	KH-M-645016-S	Screw, Flg Thd Frm M6x1.0x16
15	KH-24-063-88-S	Kit, Cyl Baffle - #2 Side
16	KH-24-063-90-S	Baffle, Valley #2 Side
17	KH-M-0545010	Screw, Flg Thd Frm M5x0.8x10
18	KH-24-063-60-S	Baffle, Valley #1 Side
19	KH-24-063-85-S	Kit, Cyl Barrel - #1 Side
—	KH-25-154-11-S*	Clip, Repair (Speed Nut)
—	KH-24-332-01-S*	Insert Threaded
—	KH-41-037-10-S*	Nameplate, Service

* Not Shown

Kohler CV730-3130 Starting System

24 098 01-S (Nippondenso)

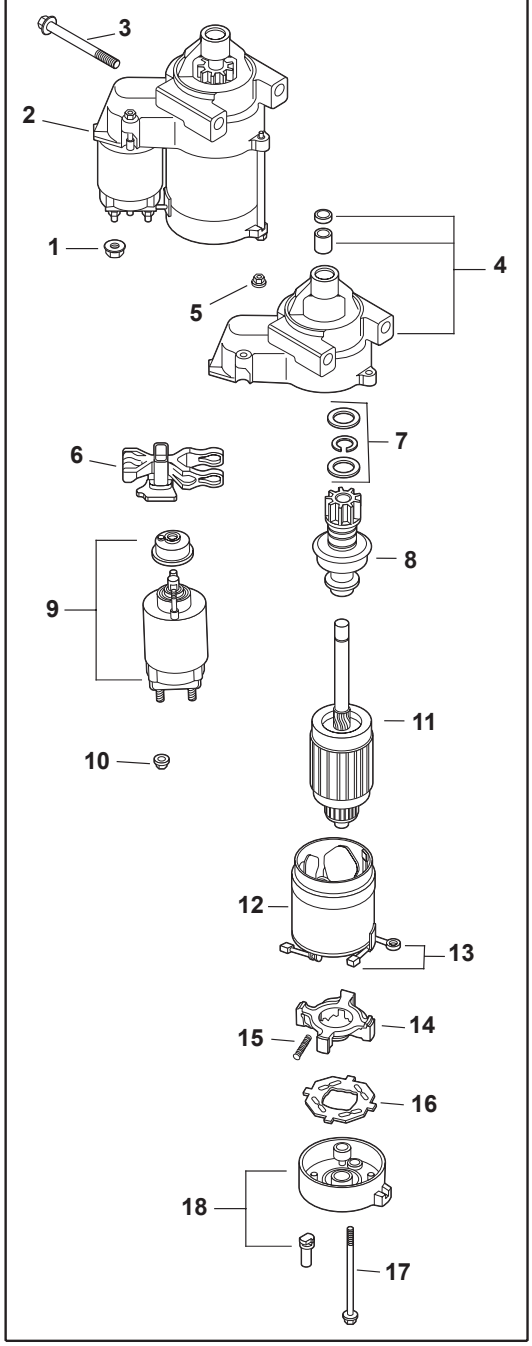

25 098 08-S (Delco)

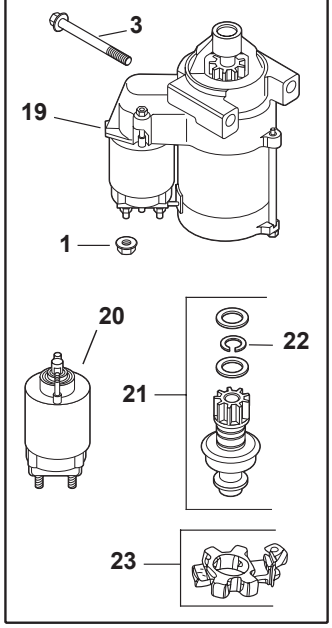

25 098 09-S (Delco)

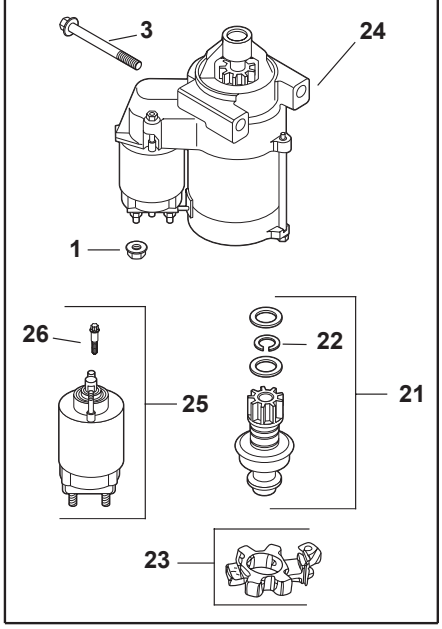

25 098 11-S (Delco)

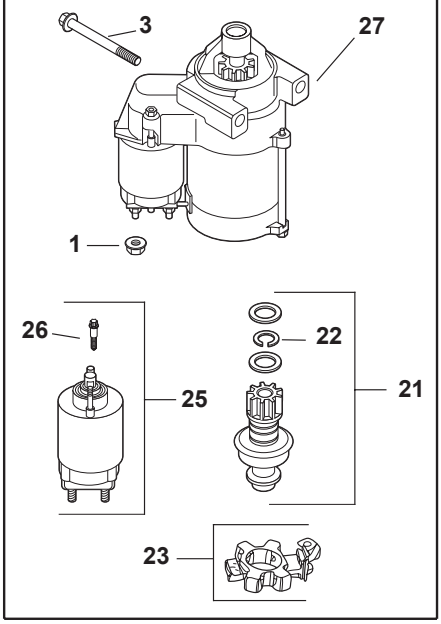

Ref.	Part Number	Description
1	712-3086	Nut, Flg M8X1.25
2	KH-25-098-11-S	Starter Assy, Solenoid Shift
3	KH-M-851080-S	Screw, Flg M8x1.25x80
4	KH-24-081-04	Drive, End Cap
5	KH-52-100-09	Nut
6	KH-12-090-10	Lever, Drive
7	KH-24-755-84	Kit, Starter Repair
8	KH-12-239-01	Drive Pinion
9	KH-52-435-02	Solenoid
10	KH-52-100-10	Nut
11	KH-12-170-04	Armature
12	KH-12-471-01	Frame w/ Brushes
13	KH-52-323-03	Brush Holder
14	KH-52-221-01	Brush & Spring Kit
15	KH-52-089-09	Spring, Brush
16	KH-52-168-01	Insulator
17	KH-52-211-05	Thru Bolt
18	KH-24-301-01	Commutator, End Cap
19	KH-25-098-11-S	Starter Assy, Solenoid Shift
20	KH-25-435-04	Solenoid
21	KH-25-755-33-S	Kit, Starter Pinion (Includes 22)
22	KH-25-141-05-S	Ring, Retaining
23	KH-25-221-01-S	Kit, Brush Holder
24	KH-25-098-11-S	Starter Assy, Solenoid Shift
25	KH-25-435-06-S	Kit, Solenoid (Includes 26)
26	KH-25-086-113-S	Screw, External Torx Head
27	KH-25-098-11-S	Starter Assy, Solenoid Shift

* Service starter components according to the part number printed on the starter. Starter components are NOT interchangeable. To replace complete Starter Assembly, order Part Number 25 098 09-S.

Kohler CV730-3130 Engine Controls

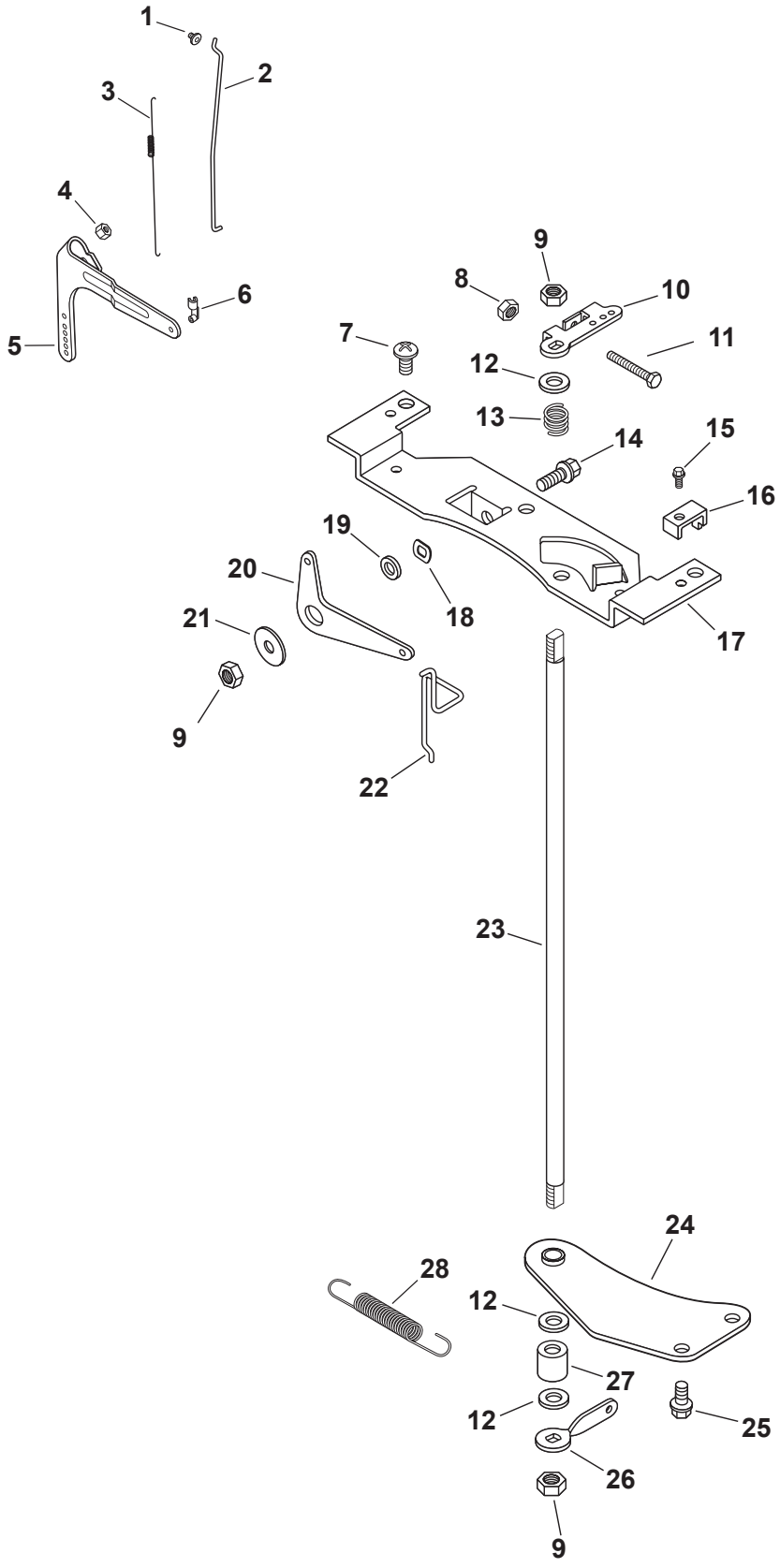

Ref.	Part Number	Description
1	KH-25-158-08	Bushing, Linkage Retaining
2	KH-24-079-04	Linkage, Throttle
3	KH-24-089-01	SPring, Linkage
4	KH-M-641060-S	Nut, Flg M6x1.0
5	KH-24-090-51-S	Lever, Governor
6	KH-25-158-11	Bushing, Throttle Linkage
7	KH-24-086-06	Screw, Phl Hd 11-16X3/4"
8	KH-M-446030-S	Nut, M4X0.7
9	KH-M-647060	Nut, Lock M6X1.0
10	KH-24-090-09	Lever, Throttle Control
11	KH-M-401030	Screw, Cap M4X0.7X30
12	KH-X-25-72	Washer, Flat 1/4"
13	KH-24-089-20	Spring, Throttle Shaft
14	KH-M-639016-S	Screw, FLG M6X1.0X16
15	KH-M-545016-S	Screw, Flg Thd Frm M5X0.8X16
16	KH-12-237-01	Clamp, Cable
17	KH-24-126-111-S	Bracket, Control
18	KH-277341	Washer, Spring 3/8"
19	KH-25-431-01-S	Spacer
20	KH-24-090-20	Lever, Choke
21	736-0173	Washer, Flat 1/4"
22	KH-24-079-10	Linkage, Choke
23	KH-24-144-11	Shaft, Throttle
24	KH-24-126-162-S	Bracket, Throttle Shaft
25	KH-M-645016-S	Screw, Flg Thd Frm M6x1.0x16
26	KH-24-090-12	Lever Throttle Control
27	KH-24-112-10	Spacer
28	KH-24-089-46-S	Spring, Governor
—	KH-24-211-03-S	Bolt, Rd Hd Sq Neck M6X1.0X25

Kohler CV730-3130 Air Intake/Filtration

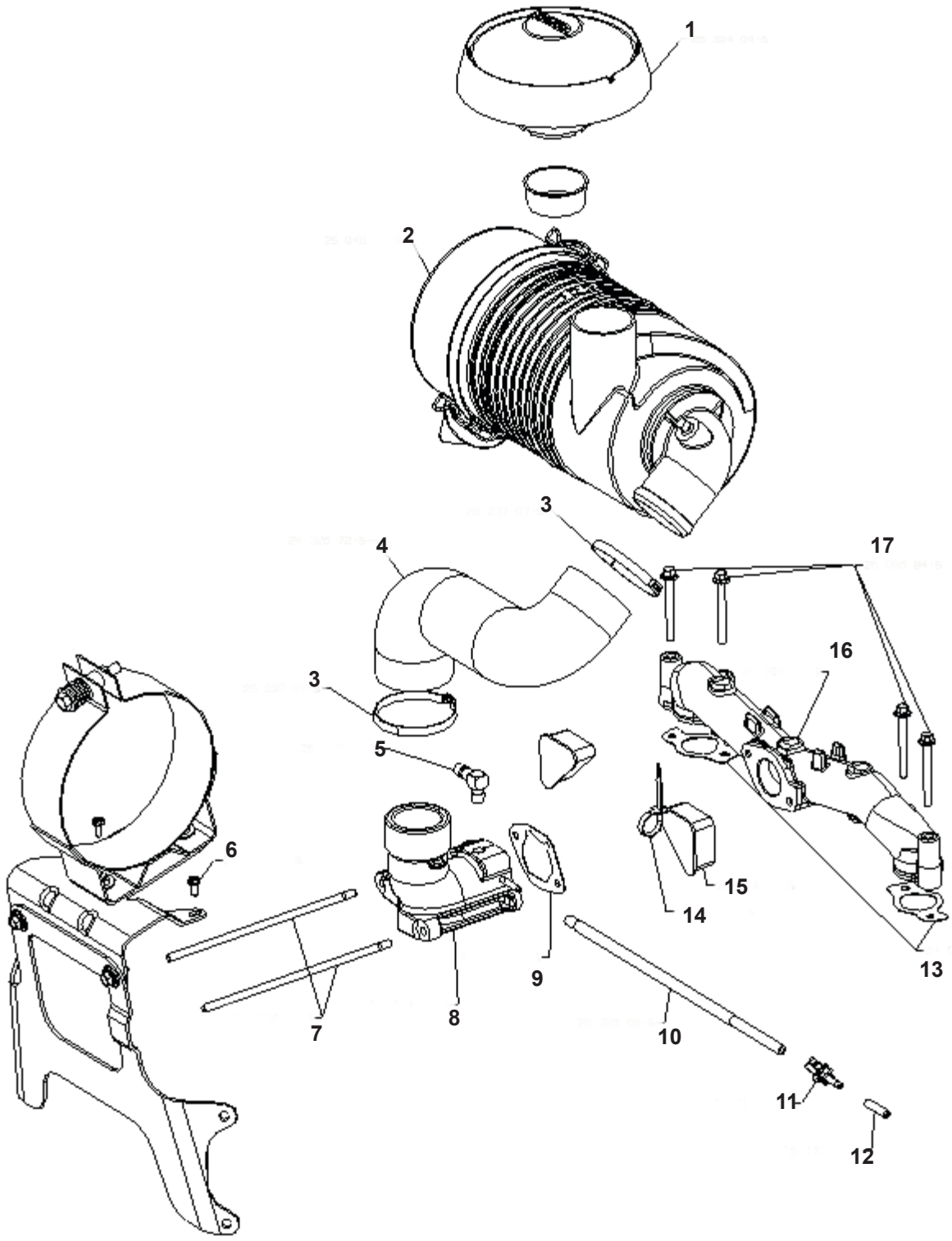

Ref.	Part Number	Description
1	KH-25-324-04-S	Hood, Inlet
2	KH-25-048-17-S	Air Cleaner
3	KH-25-237-21-S	Clamp, Hose
4	KH-24-326-72-S	Hose, Air Cleaner
5	KH-25-155-38-S	Connector, Hose
6	KH-25-086-91-S	Screw, WSH HD Tap #8-18 x 1/2"
7	KH-24-072-10-S	Stud, M6x1.0x122
8	KH-24-054-38-S	Kit, Elbow
9	KH-24-041-14	Gasket, Air Cleaner Base
10	KH-25-326-08-S	Hose, Evaporative, 20”
11	KH-25-155-51-S	Connector, Evaporative
12	KH-25-173-33-S	Cap, Masking
13	KH-24-041-01	Gasket, Intake Manifold
14	KH-25-454-04-S	Tie
15	KH-24-096-17-S	Cover, Blower Housing
16	KH-24-164-06	Manifold, Intake
17	KH-25-086-84-S	Screw, FLG M6x1.0x55

Kohler CV730-3130 Fuel System

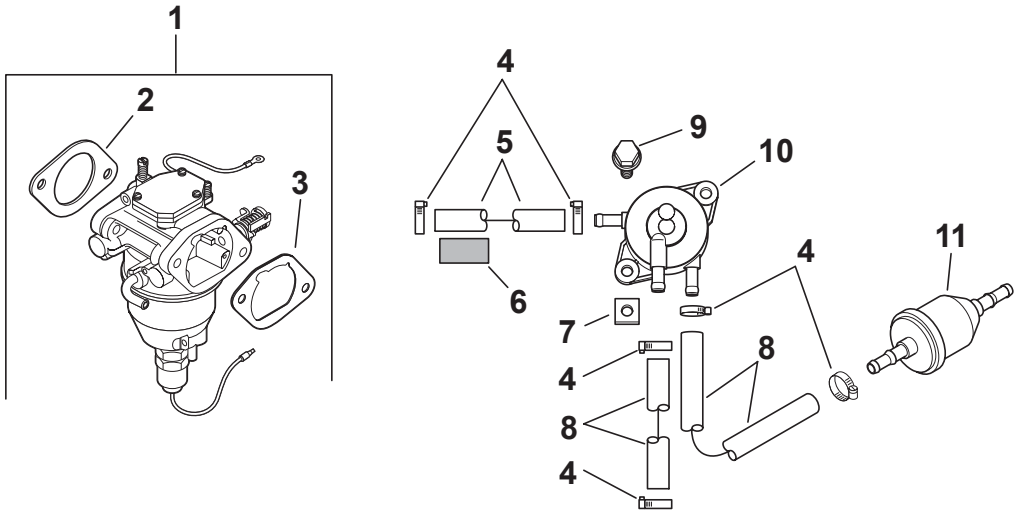

Ref.	Part Number	Description
1	KH-24-853-92-S	Kit, Carburetor W/Gaskets (Includes 2,3)
2	KH-24-041-15	Gasket, Carburetor
3	KH-24-041-14	Gasket, Air Cleaner Base
4	KH-25-237-31-S	Clamp, Hose
5	KH-24-353-12	Line, Flex 11" Pump-Pulse (Air Only)
6	KH-24-431-02-S	Sleeve, Insulating 14"
7	KH-25-100-37-S	Nut, Plastic
8	KH-25-111-34-S	Line, Fuel (24"-Cut To Length)
9	KH-24-086-12	Screw, Tap M6x1.7x18
10	KH-24-393-16	Pump, Fuel
11	KH-24-050-13-S	Filter, Fuel

Kohler CV730-3130 Exhaust

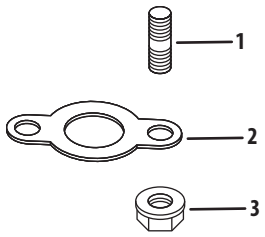

Ref.	Part Number	Description
1	KH-25-072-04	Stud, M8X1.25X33
2	KH-24-041-49-S	Gasket, Exhaust
3	712-3086	Nut, Flg M8X1.25

Kohler CV730-3130 Labels

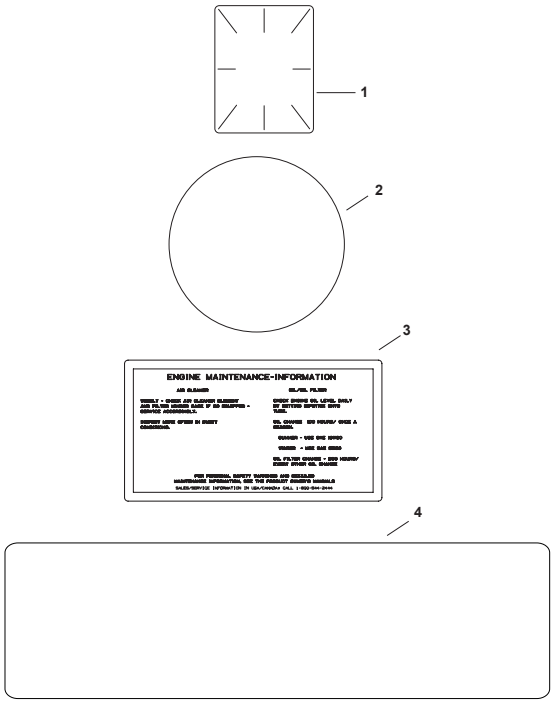

Artwork is representative.
Actual labels may differ depending on model and specification number.

Ref.	Part Number	Description
1	KH-25-113-39-S	Decal, Clear Laminate
2	KH-24-113-18-S	Decal, Grass Screen
3	KH-25-113-27-S	Decal, Air Cleaner
4	KH-24-113-52-S	Decal, Command 25 HP

Kohler CV740-3125 Crankcase

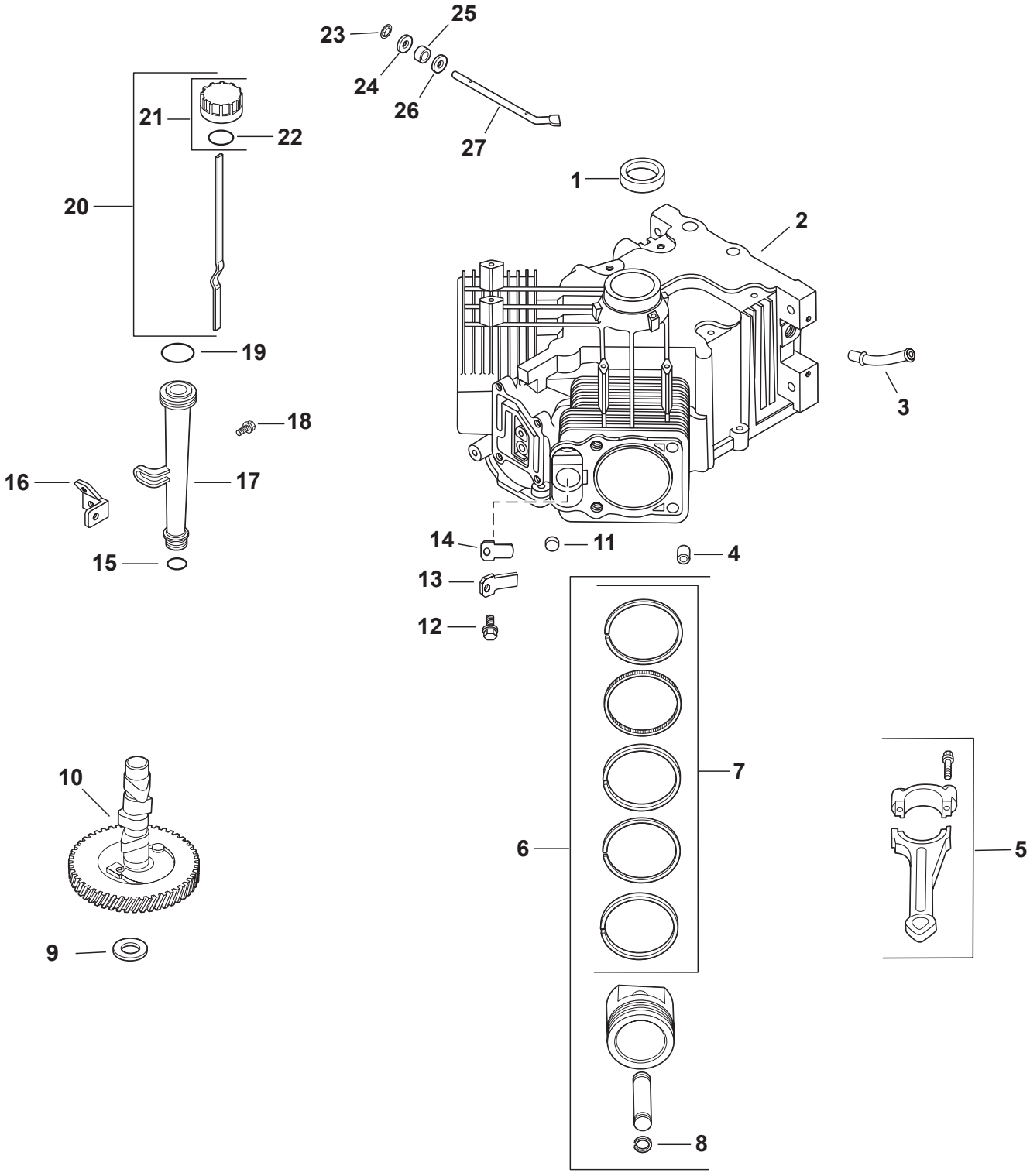

Ref.	Part Number	Description
1	KH-24-032-19-S	Seal, Oil
2		Crankcase (Use: Miniblock KH-24-782-14)
3	KH-24-294-13	Fitting
4	KH-24-380-16-S	Pin, Locating
5	KH-24-067-28-S	Connecting Rod (STD)
	KH-24-067-29-S	Connecting Rod (.25)
6	KH-25-874-01-S	Kit, Piston w/ Ring (STD) (Includes 7, 8)
	KH-25-874-02-S	Kit, Piston w/ Ring (.08)
	KH-24-874-03-S	Kit, Piston w/ Ring (.25)
	KH-24-874-04-S	Kit, Piston w/ Ring (.50)
7	KH-24-108-14-S	Ring Set, Piston (STD)
	KH-24-108-15-S	Ring Set, Piston (.08)
	KH-24-108-16-S	Ring Set, Piston (.25)
	KH-24-108-17-S	Ring Set, Piston (.50)
8	KH-24-018-01-S	Retainer, Piston Pin
9	KH-12-422-07-S	Camshaft Shim (White .028")
10	KH-24-012-18-S	Kit, Camshaft (Includes KH-25-357-14-S)
11	KH-52-139-09-S	Plug, Cup
12	KH-M-0545010	Screw, Flg Thd Frm M5x0.8x10
13	KH-24-018-04-S	Retainer, Breather Reed
14	KH-24-402-05-S	Reed, Breather
15	KH-12-153-01-S	O-Ring, Lower Oil Fill Tube
16	KH-24-126-19	Bracket, Oil Fill Tube
17	KH-32-755-04-S	Tube, Oil Fill Assembly
18	KH-M-545016-S	Screw, Flg Thd Frm M5x0.8x16
19	KH-12-153-02-S	O-Ring, Upper Oil Fill Tube
20	KH-24-038-04-S	Dipstick, Assy (Includes 21, 22)
21	KH-24-755-46	Kit, Oil Fill Cap (Yellow) (Includes 22)
22	KH-25-153-02-S	O-Ring, Dipstick
23	KH-24-018-09-S	Retainer, Ring
24	KH-M-931010-S	Washer, Flat 9MM
25	KH-28-032-09-S	Seal, Governor Cross Shaft
26	KH-24-468-15-S	Washer, Flat 1/4" (Bottom)
27	KH-24-144-38-S	Shaft, Governor Cross
—	KH-25-357-14-S	Camshaft Lubricant (Not Shown)

Kohler CV740-3125 Crankshaft

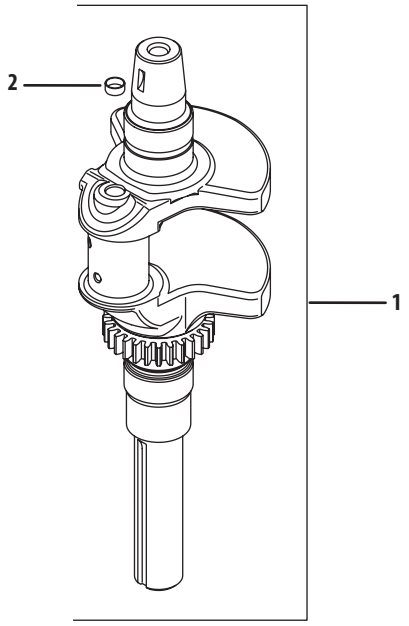

Ref.	Part Number	Description
1	KH-24-014-345-S	Crankshaft (Includes 2)
2	KH-52-139-09-S	Plug, Cup

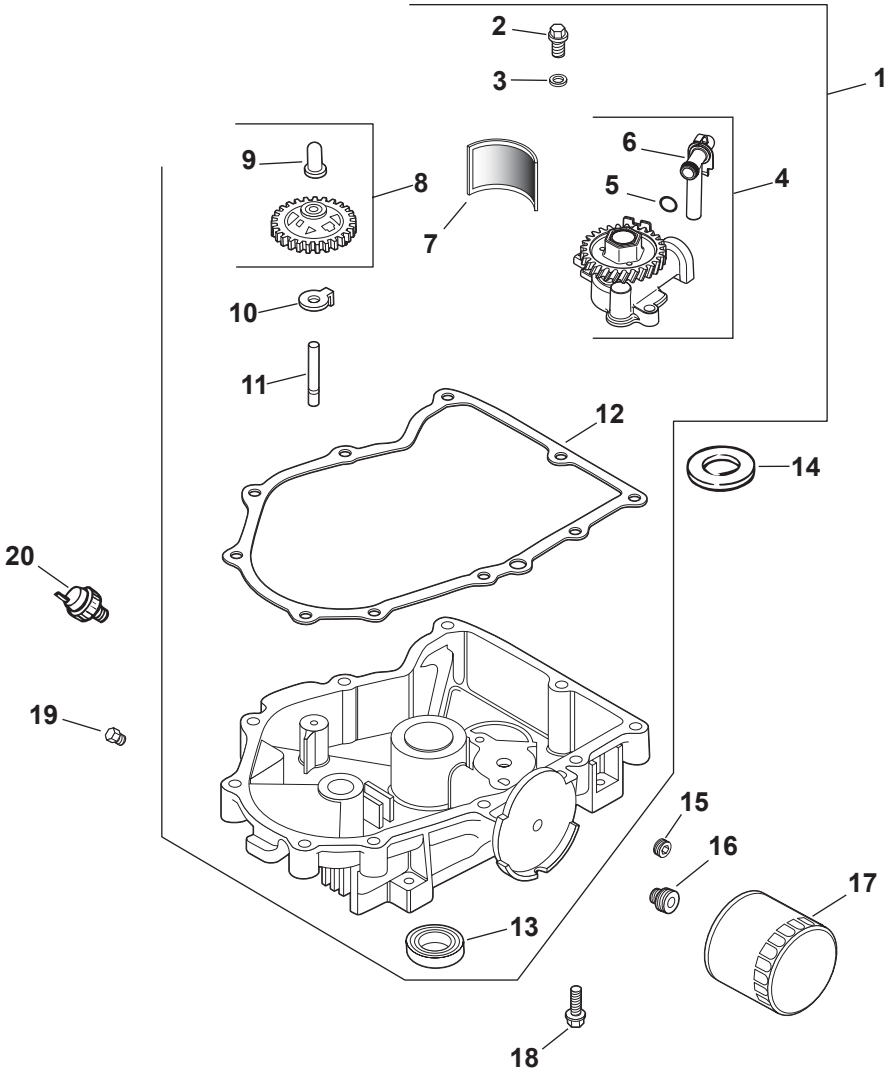

Ref.	Part Number	Description
1	KH-24-199-21-S	Kit, Oil Pan Assembly (Inc. 2-13)
2	KH-M-645025-S	Screw, Flg Thd Frm M6X1.0X25
3	KH-M-631005	Washer, Flat 6MM
4	KH-24-393-51-S	Kit, Oil Pump Assembly (Inc. 5, 6)
5	KH-24-153-01	O-Ring, Oil Pick-Up
6	KH-24-381-11-S	Tube, Oil Pick-Up
7	KH-24-162-26-S	Screen, Oil
8	KH-24-043-12	Kit, Governor Gear w/ Pin (Includes 9)
9	KH-12-380-01	Pin, Governor Regulating
10	KH-24-448-02-S	Tab, Locking

Ref.	Part Number	Description
11	KH-12-144-02	Shaft, Governor Gear
12	KH-24-041-54-S	Kit, Oil Pan GSKT (Select-A-Seal)
13	KH-25-032-06-S	Seal, Oil
14	KH-24-422-05-S	Shim, Thrust (Black .686MM)
15	KH-25-139-62-S	Plug, Pipe CTSK 3/8"
16	KH-24-136-01	Nipple, Oil Filter
17	KH-12-050-01-S	Filter, Oil
18	KH-24-086-17-S	Screw, Flg M8x1.25x45
19	KH-52-139-02	Plug, Hd Pipe 3/8"
20	KH-25-099-27-S	Switch, Oil Pressure

Kohler CV740-3125 Head/Valve/Breather

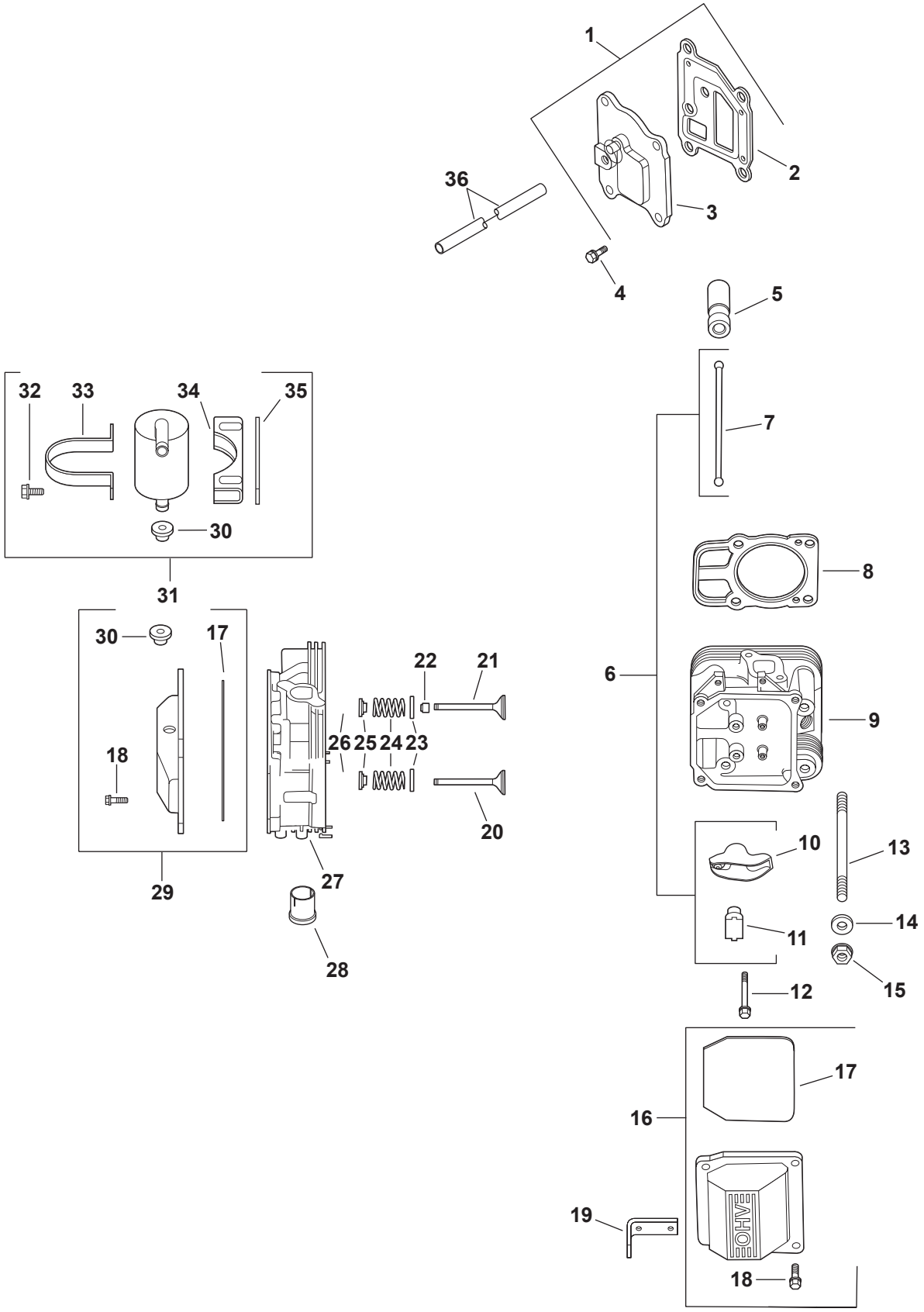

Ref.	Part Number	Description
1	KH-24-033-03	Kit, Breather Cover W/Gasket
		(Includes 2,3)
2	KH-24-041-67-S	Gasket, Breather
3	KH-24-096-87-S	Cover, Breather
4	KH-M-645020-S	Screw, Flg Thd Frm M6x1.0x20
5	KH-25-351-07-S	Kit, Hydraulic Valve Lifter
6	KH-24-755-66	Kit, Valve Train (Includes 7,10,11)
7	KH-24-411-05	Rod, Push
8	KH-24-841-03-S	Kit, Cylinder Head Gasket
		(Includes Head Mtg Hdwe)
9	KH-24-318-116-S	Kit, #2 Cylinder Head Assy
10	KH-25-186-01	Arm, Rocker
11	KH-24-599-02-S	Pivot, Rocker Arm
12	KH-M-640034-S	Screw, Flg M6x1.0x34
13	KH-24-072-09-S	Stud, M8x1.25, M10x1.5, 105mm
14	KH-24-468-16-S	Washer, Flat 8.6 Mm
15	KH-24-100-10-S	Nut, Flg M8x1.25
16	KH-24-755-141-S	Kit, Plain Rocker Cover
		(Includes 17,18)
17	KH-24-153-30-S	O-Ring, Valve Cover
18	KH-M-651030-S	Screw, Flg M6x1.0x30
19	KH-25-445-01-S	Strap, Lifting
20	KH-24-016-01	Valve, Exhaust (Std)
	KH-24-016-02	Valve, Exhaust (.25)

Ref.	Part Number	Description
21	KH-24-017-01	Valve, Intake (Std)
	KH-24-017-02	Valve, Intake (.25)
22	KH-66-032-05-S	Seal, Valve Stem
23	KH-235011-S	Retainer, Spring
24	KH-24-089-02	Spring, Valve
25	KH-12-173-28-S	Cap, Valve Spring
26	KH-12-755-03	Kit, Retainer
27	KH-24-318-108-S	Kit, #1 Cylinder Head Assy
28	KH-24-605-07-S	Liner, Exhaust Port
29	KH-24-755-142-S	Kit, Breather Rocker Cover
		(Includes 17,18,30)
30	KH-25-313-03-S	Grommet, Rubber
31	KH-24-755-57-S	Kit, Breather Separator (Inc. 30-35)
32	KH-M-645016-S	Screw, Flg Thd Frm M6x1.0x16
33	KH-24-445-02	Strap, Breather
34	KH-24-126-44	Bracket, Breather Separator
35	KH-24-112-12	Spacer
36	KH-24-326-63-S	Hose, Breather
	KH-24-755-147-S	Kit, Cylinder Head Hardware
		(Not Shown)
		(Services 1 Head. Quantities Listed
		Are For Both Heads)
		(Includes 7,10-12,20-26)

Kohler CV740-3125 Ignition/Electrical

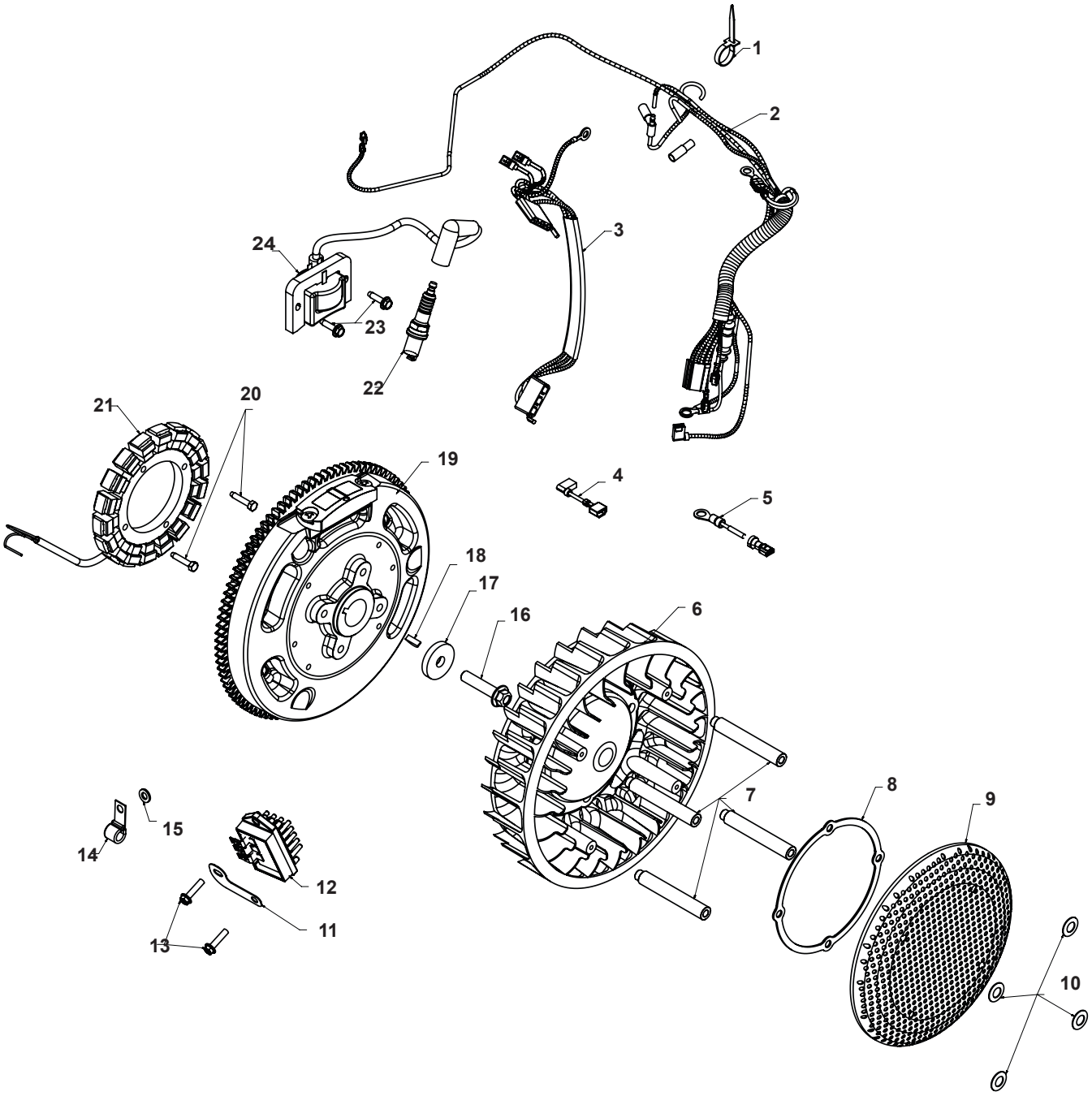

Ref.	Part Number	Description
1	KH-25-454-07-S	Tie
2	KH-24-176-150-S	Harness, Wiring Assembly
3	KH-24-176-130-S	Harness, DSAI Wiring
4	KH-24-518-09	Lead, Oil Sentry
5	KH-25-518-34-S	Lead
6	KH-24-157-12-S	Fan
7	KH-24-112-14	Spacer
8	KH-24-141-06	Ring, Support
9	KH-24-162-41-S	Screen, Grass
10	KH-24-468-11	Washer, Spring 10 Mm
11	KH-24-126-137-S	Bracket, Ground Strap
12	KH-25-403-21-S	Regulator, Rectifier
13	KH-25-086-157-S	Screw, Hex Flange Hi-Lo
14	KH-235173	Clip, Cable
15	KH-X-25-63	Washer, Flat 1/4"
16	KH-12-086-14	Screw, Flg M10x1.5x45
17	KH-12-468-03	Washer, Flat 13/32"
18	KH-X-42-15	Key, 3/16" X 5/8"
19	KH-24-025-58-S	Flywheel
20	KH-M-548025-S	Screw, Thd Frm M5x0.8x25
21	KH-237878	Kit, 15 Amp Stator
22	759-3336	Plug, Spark
23	KH-M-545020-S	Screw, Flg Thd Frm M5x0.8x20
24	KH-24-584-63-S	Module Spark Adv (Dsai) Assy
—	KH-25-086-43*	Screw, Skt Set #10-24x1/4"
—	KH-M-603100*	Screw, Cap M6x1.0x99.5
—	KH-X-25-53*	Washer, Flat 1/4"
—	KH-210281-S*	Clip
—	KH-24-755-79	Kit, Chopper Screen (Includes 7-9, 41-037-10-S, 25-086-27-S, M-603100-S, M-629122-S, X-25-53-S)

* Not Shown

Kohler CV740-3125 Blower Housing & Baffles

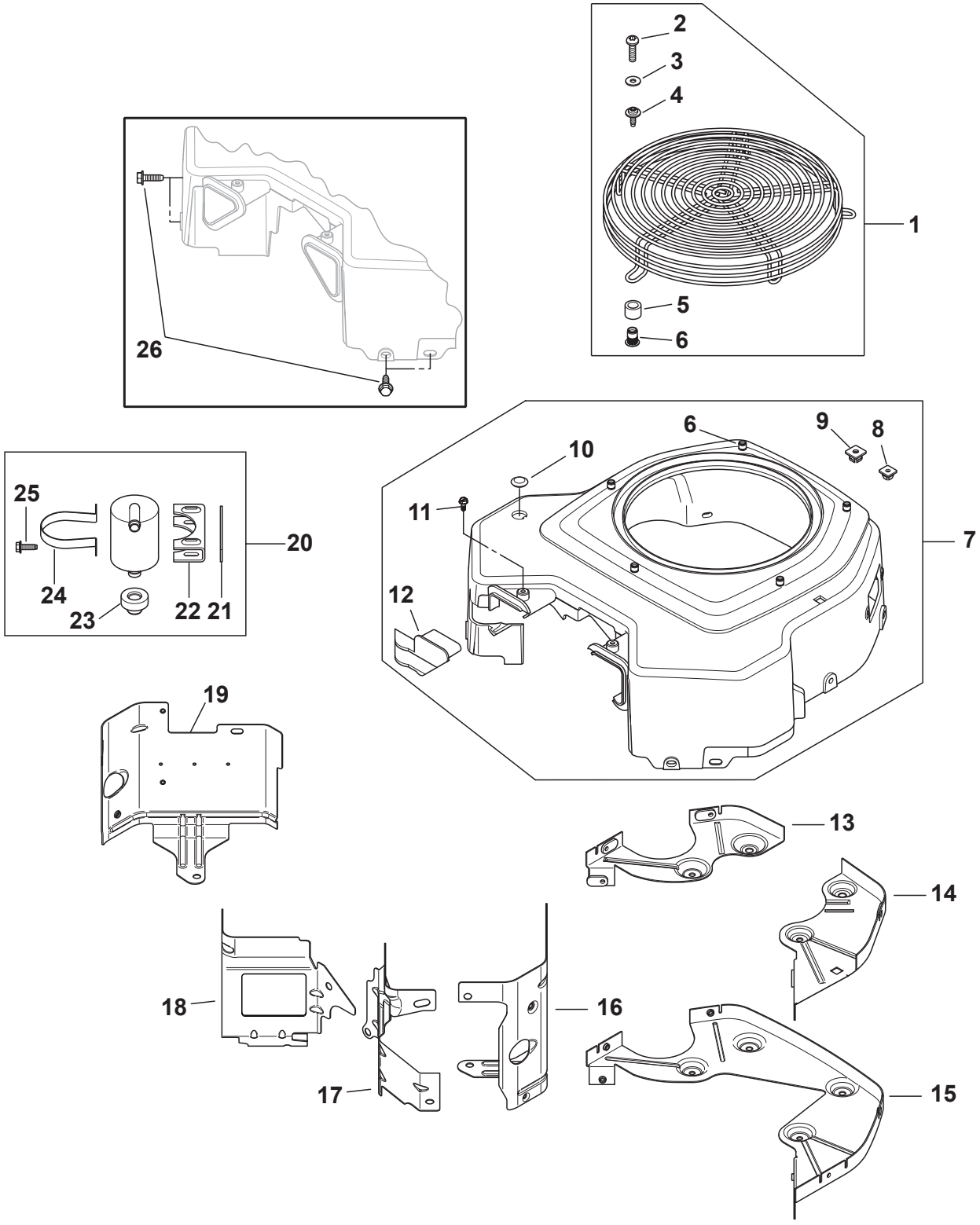

Ref.	Part Number	Description
1	KH-24-755-94-S	Kit, Guard
		(Includes 2-4 & 24 445 01-S)
2	KH-24-086-160-S	Screw, Lbd Skt Pan M5x0.8x15
3	KH-24-468-10	Washer, Flat 7/32
4	KH-25-086-160-S	Screw, Sems
5	KH-24-332-01-S	Insert Threaded
6	KH-24-112-09-S	Spacer
7	KH-24-027-199-S	Kit Blower Housing Assembly
		(Inc. 8-12, Set Screw & Nameplate)
8	KH-24-100-02-S	Nut, Plastic
9	KH-24-100-37-S	Nut, Plastic
10	KH-25-139-16	Plug, Button 9/16
11	KH-25-086-91-S	Screw, WSH HD Tap #8-18 x 1/2"
12	KH-24-096-119-S	Blower Housing Cover
13	KH-24-146-20-S	Backing Plate, #1 Side
14	KH-24-146-19-S	Backing Plate, #2 Side
15	KH-24-146-59-S	Kit, Backing Plate (Inc. M-561016-S)
16	KH-24-063-88-S	Kit, Cyl Baffle - #2 Side
17	KH-24-063-90-S	Baffle, Valley #2 Side
18	KH-24-063-89-S	Baffle, Valley #1 Side
19	KH-24-063-85-S	Kit, Cyl Barrel - #1 Side
20	KH-24-755-57-S	Kit, Breather Separator
21	KH-24-112-12	Spacer
22	KH-24-126-44	Bracket, Breather Separator
23	KH-25-313-03-S	Rubber Grommet
24	KH-24-445-02	Strap, Breather
25	KH-M-545016-S	Screw, Flg Thd Frm M5x0.8x16
26	KH-M-645016-S	Screw, Flg Thd Frm M6x1.0x16
—	KH-24-086-18*	Screw, PHL HD #11-16 x 7/8
—	KH-24-455-01-S*	Insert Installation Tool
—	KH-25-086-158-S*	Screw, Flg Thd Frm M6x1.0x10
—	KH-25-086-43*	Screw, Set
—	KH-41-037-10-S*	Nameplate, Service
—	KH-M-0545010*	Screw, Flg Thd Frm M5x0.8x10
—	KH-M-545020-S*	Screw, Flg Thd Frm M5x0.8x20
—	KH-M-645016-S*	Screw, Flg Thd Frm M6x1.0x16

* Not Shown

Kohler CV740-3125 Starting System

24 098 01-S (Nippondenso)

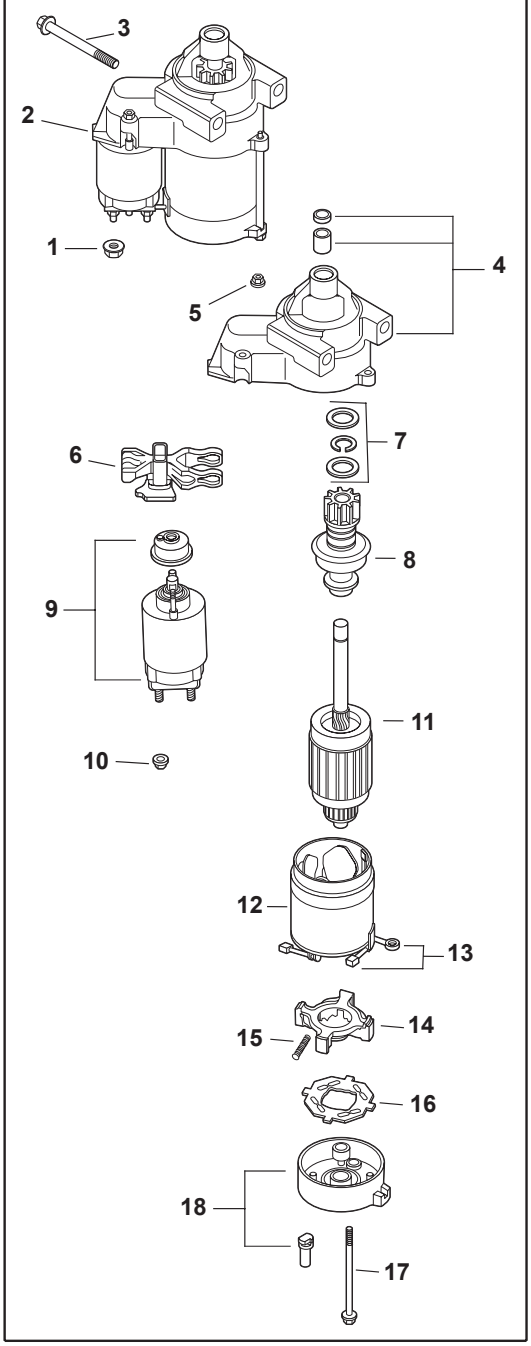

25 098 08-S (Delco)

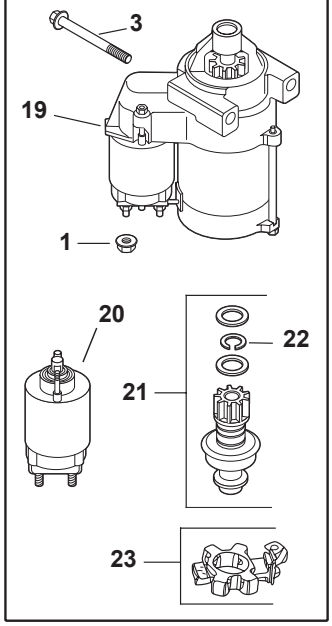

25 098 09-S (Delco)

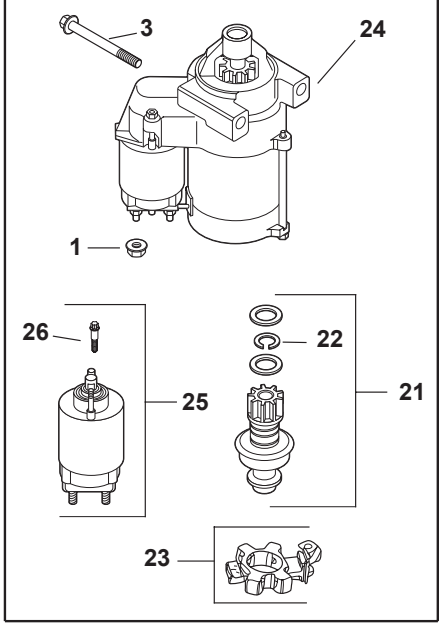

25 098 11-S (Delco)

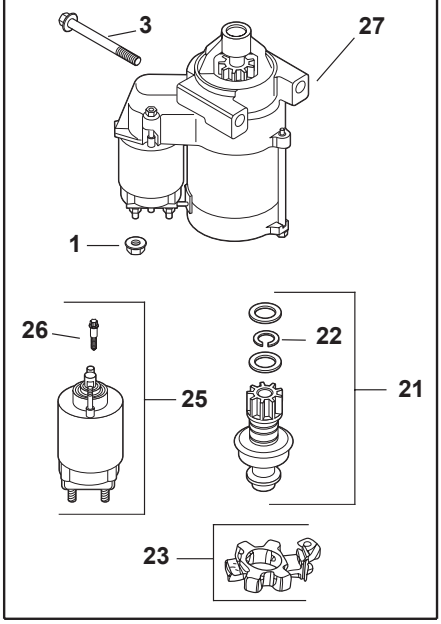

Ref.	Part Number	Description
1	712-3086	Nut, Flg M8X1.25
2	KH-25-098-11-S	Starter Assy, Solenoid Shift
3	KH-M-851080-S	Screw, Flg M8x1.25x80
4	KH-24-081-04	Drive, End Cap
5	KH-52-100-09	Nut
6	KH-12-090-10	Lever, Drive
7	KH-24-755-84	Kit, Starter Repair
8	KH-12-239-01	Drive Pinion
9	KH-52-435-02	Solenoid
10	KH-52-100-10	Nut
11	KH-12-170-04	Armature
12	KH-12-471-01	Frame w/ Brushes
13	KH-52-323-03	Brush Holder
14	KH-52-221-01	Brush & Spring Kit
15	KH-52-089-09	Spring, Brush
16	KH-52-168-01	Insulator
17	KH-52-211-05	Thru Bolt
18	KH-24-301-01	Commutator, End Cap
19	KH-25-098-11-S	Starter Assy, Solenoid Shift
20	KH-25-435-04	Solenoid
21	KH-25-755-33-S	Kit, Starter Pinion (Includes 22)
22	KH-25-141-05-S	Ring, Retaining
23	KH-25-221-01-S	Kit, Brush Holder
24	KH-25-098-11-S	Starter Assy, Solenoid Shift
25	KH-25-435-06-S	Kit, Solenoid (Includes 26)
26	KH-25-086-113-S	Screw, External Torx Head
27	KH-25-098-11-S	Starter Assy, Solenoid Shift

* Service starter components according to the part number printed on the starter. Starter components are NOT interchangeable. To replace complete Starter Assembly, order Part Number 25 098 09-S.

Kohler CV740-3125 Engine Controls

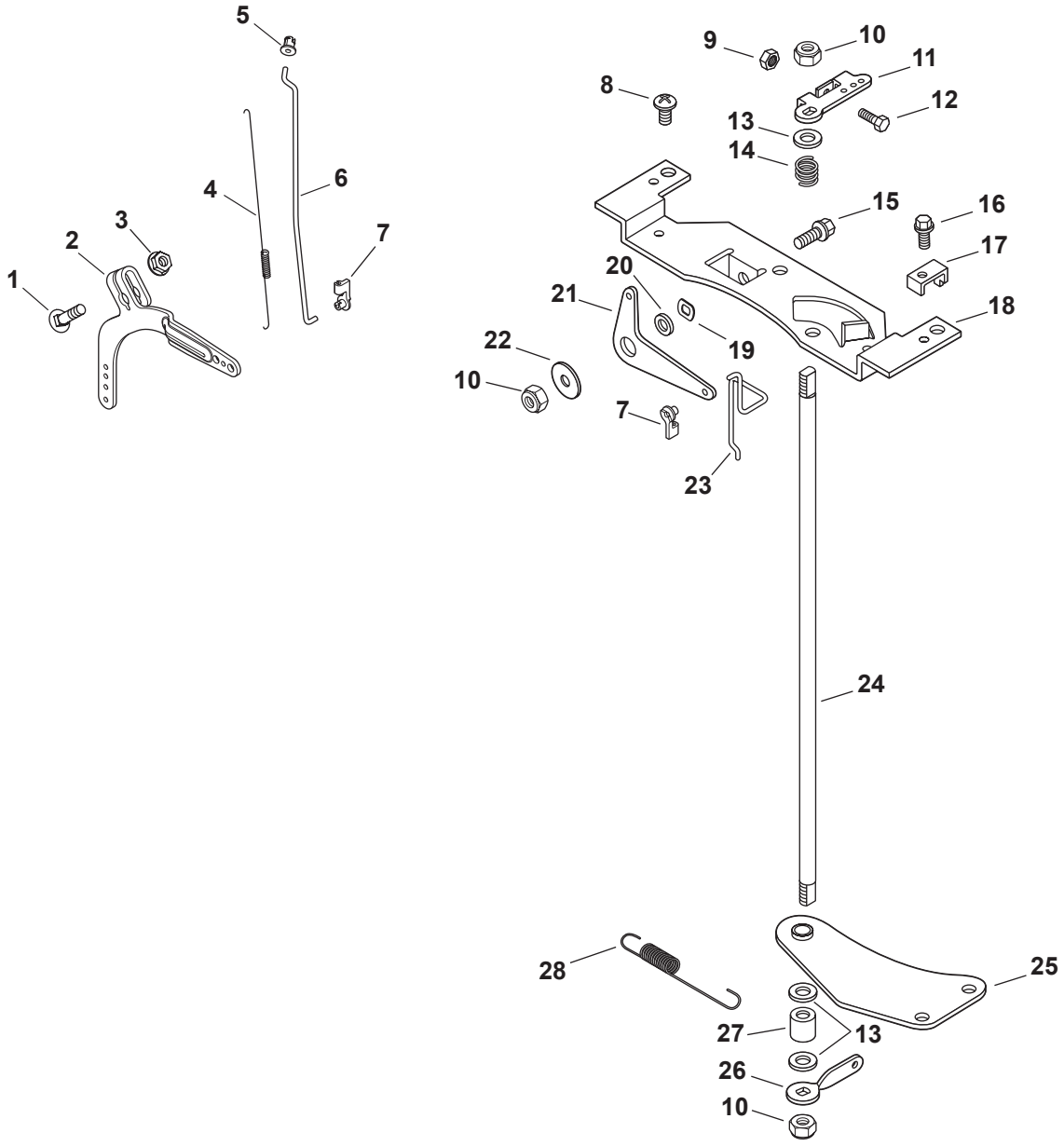

Ref.	Part Number	Description
1	KH-24-211-03-S	Bolt, Rd Hd Sq Neck M6X1.0X25
2	KH-24-090-51-S	Lever, Governor
3	KH-M-641060-S	Nut, Flg M6x1.0
4	KH-24-089-01	SPring, Linkage
5	KH-25-158-08	Bushing, Linkage Retaining
6	KH-24-079-04	Linkage, Throttle
7	KH-25-158-11	Bushing, Throttle Linkage
8	KH-24-086-06	Screw, Phl Hd 11-16X3/4"
9	KH-M-446030-S	Nut, M4X0.7
10	KH-M-647060	Nut, Lock M6X1.0
11	KH-24-090-09	Lever, Throttle Control
12	KH-M-401030	Screw, Cap M4X0.7X30
13	KH-X-25-72	Washer, Flat 1/4"
14	KH-24-089-20	Spring, Throttle Shaft
15	KH-M-639016-S	Screw, FLG M6X1.0X16
16	KH-M-545016-S	Screw, Flg Thd Frm M5X0.8X16
17	KH-12-237-01	Clamp, Cable
18	KH-24-126-111-S	Bracket, Control
19	KH-277341	Washer, Spring 3/8"
20	KH-25-431-01-S	Spacer
21	KH-24-090-20	Lever, Choke
22	736-0173	Washer, Flat 1/4"
23	KH-24-079-10	Linkage, Choke
24	KH-24-144-11	Shaft, Throttle
25	KH-24-126-162-S	Bracket, Throttle Shaft
26	KH-24-090-12	Lever Throttle Control
27	KH-24-112-10	Spacer
28	KH-24-089-49-S	Spring, Governor

Kohler CV740-3125 Air Intake/Filtration

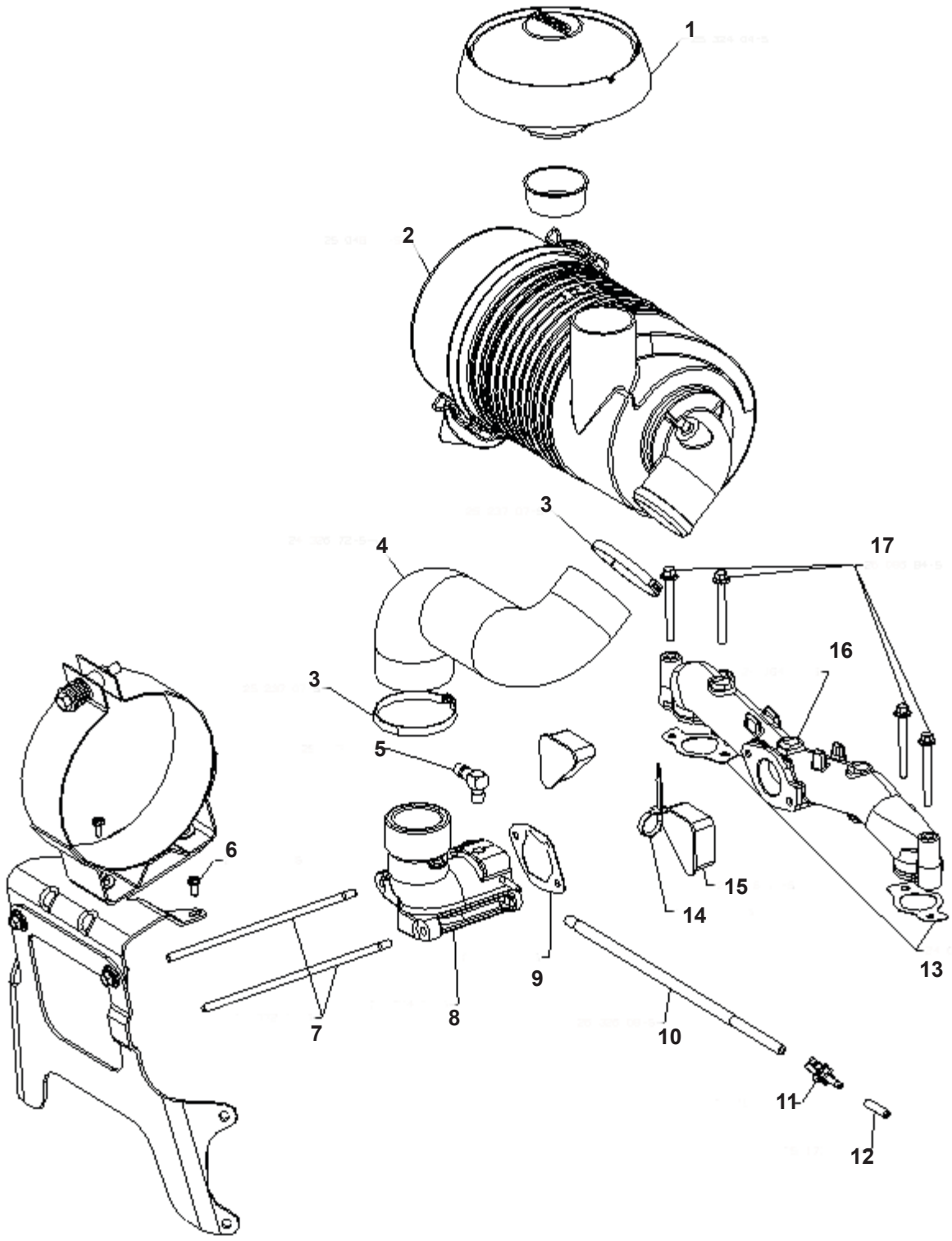

Ref.	Part Number	Description
1	KH-25-324-04-S	Hood, Inlet
2	KH-25-048-17-S	Air Cleaner
3	KH-25-237-21-S	Clamp, Hose
4	KH-24-326-72-S	Hose, Air Cleaner
5	KH-25-155-38-S	Connector, Hose
6	KH-25-086-91-S	Screw, WSH HD Tap #8-18 x 1/2"
7	KH-24-072-10-S	Stud, M6x1.0x122
8	KH-24-054-38-S	Kit, Elbow
9	KH-24-041-14	Gasket, Air Cleaner Base
10	KH-25-326-08-S	Hose, Evaporative, 20”
11	KH-25-155-51-S	Connector, Evaporative
12	KH-25-173-33-S	Cap, Masking
13	KH-24-041-01	Gasket, Intake Manifold
14	KH-25-454-04-S	Tie
15	KH-24-096-17-S	Cover, Blower Housing
16	KH-24-164-06	Manifold, Intake
17	KH-25-086-84-S	Screw, FLG M6x1.0x55

Kohler CV740-3125 Fuel System

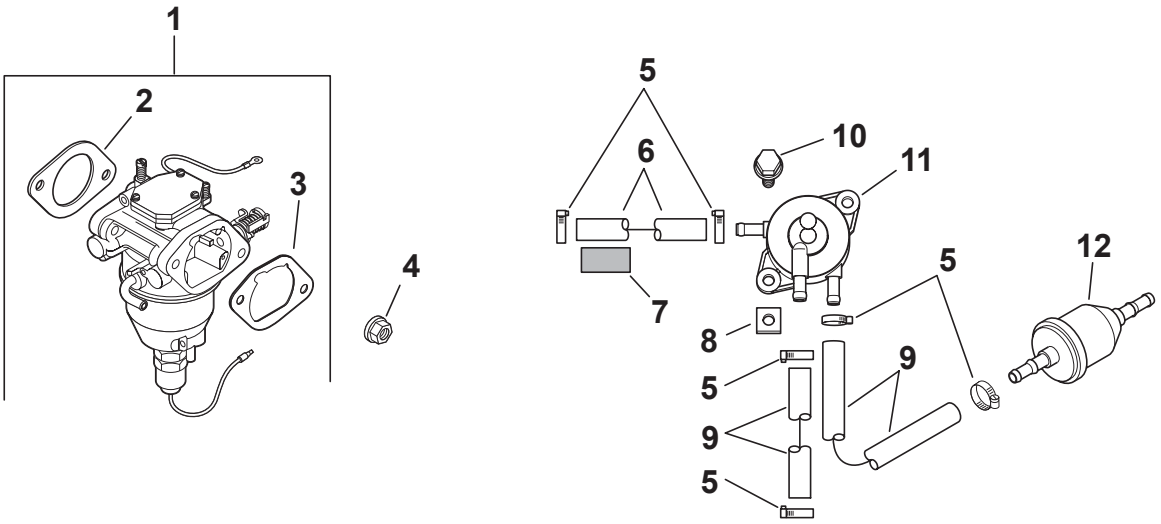

Ref.	Part Number	Description
1	KH-24-853-92-S	Kit, Carburetor W/Gaskets (Includes 2,3)
2	KH-24-041-15	Gasket, Carburetor
3	KH-24-041-14	Gasket, Air Cleaner Base
4	KH-M-641060-S	Nut, Flg M6x1.0
5	KH-25-237-31-S	Clamp, Hose
6	KH-24-353-12	Line, Flex 11" Pump-Pulse (Air Only)
7	KH-24-431-02-S	Sleeve, Insulating 14"
8	KH-25-100-37-S	Nut, Plastic
9	KH-25-111-34-S	Line, Fuel (24"-Cut To Length)
10	KH-24-086-12	Screw, Tap M6x1.7x18
11	KH-24-393-16	Pump, Fuel
12	KH-25-050-22-S1	Filter, Fuel
—	KH-24-234-02-S	Bowl, Float

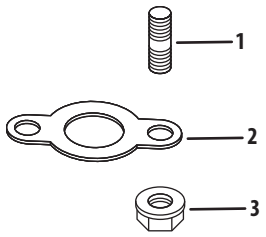

Ref.	Part Number	Description
1	KH-25-072-04	Stud, M8X1.25X33
2	KH-24-041-49-S	Gasket, Exhaust
3	712-3086	Nut, Flg M8X1.25

Kohler CV740-3125 Labels

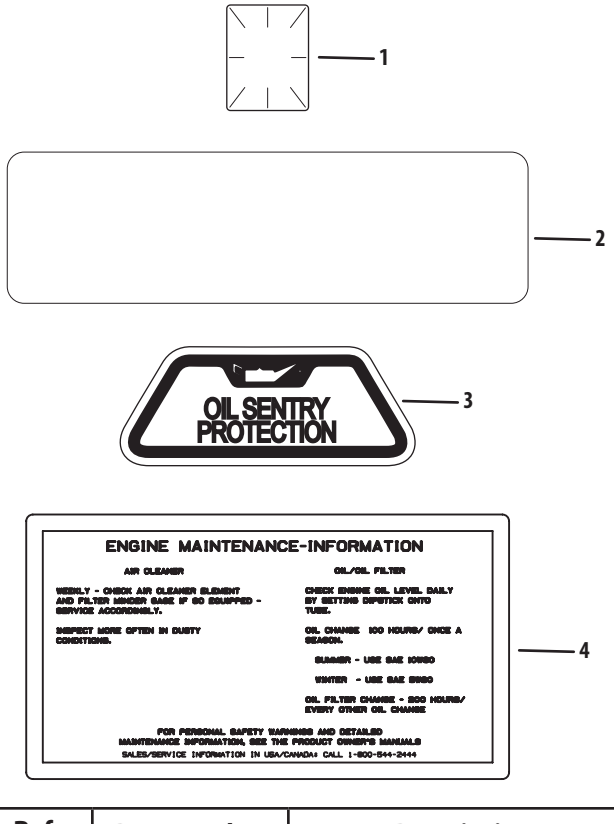

Ref.	Part Number	Description
1	KH-25-113-39-S	Decal, Clear Laminate
2	KH-24-113-123-S	Decal, Command 27 HP
3	KH-25-113-05	Decal, Oil Sentry
4	KH-25-113-27-S	Decal, Air Cleaner



To order replacement parts, call the Customer Dealer Referral Line at 1-877-282-8684 or visit www.cubcadet.com to find the nearest Cub Cadet dealer in your area.

CUB CADET LLC, P.O. BOX 361131 CLEVELAND, OHIO 44136-0019