Cub Cadet®
COMMERCIAL

Hydrostatic Zero-Turn Commercial Riding Mower

Professional Turf Equipment

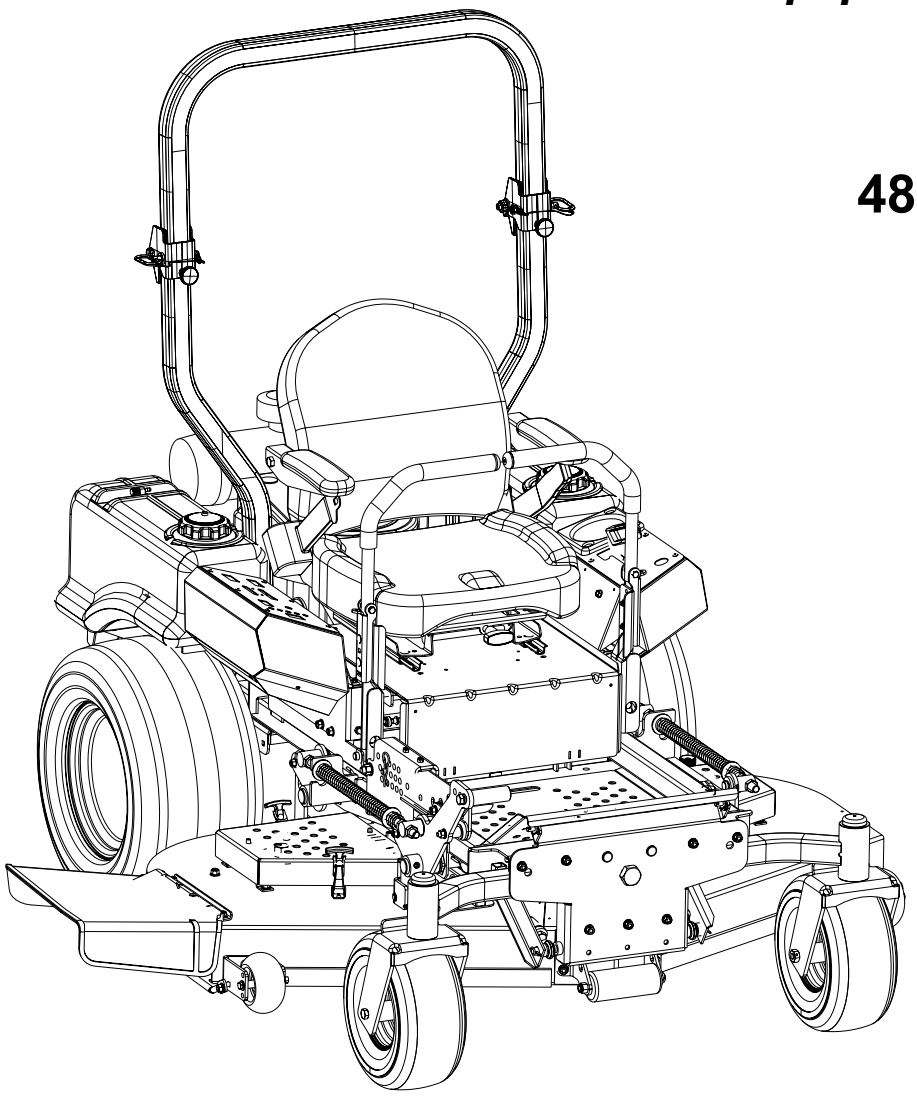

48" Fabricated Deck

ILLUSTRATED PARTS LIST

TABLE OF CONTENTS

Frame Assembly 3
48" Fabricated Cutter Deck. . . . . 4 and 5
48" Spindle Assembly. . . . . 6 and 7
Hydro Hose and Pump Assembly. . . . . .8 and 9
Brake Assembly . . . . . 10 and 11
Fuel Tank Assembly 12
Rear Bumper 13
Front Caster Assembly . . . . . 14 and 15
Control Assembly . . . . . 16 and 17
48" Wheel Assembly. 18
Seat/Floor Panel Assembly 19
23HP Kawasaki Engine Assembly . . . . . 20 and 21
25HP Kohler Engine Assembly. . . . . 22 and 23
Lift Assembly . . . . . 24 and 25
23HP Electrical Assembly Kawasaki 26
25HP Electrical Assembly Kohler 27
Decal Map 28

MODELS LISTED IN THIS MANUAL

23HP Tank, 53AI8CT2050

25HP Tank, 53AH8CT2050

Frame Assembly- Figure 1 and Parts List

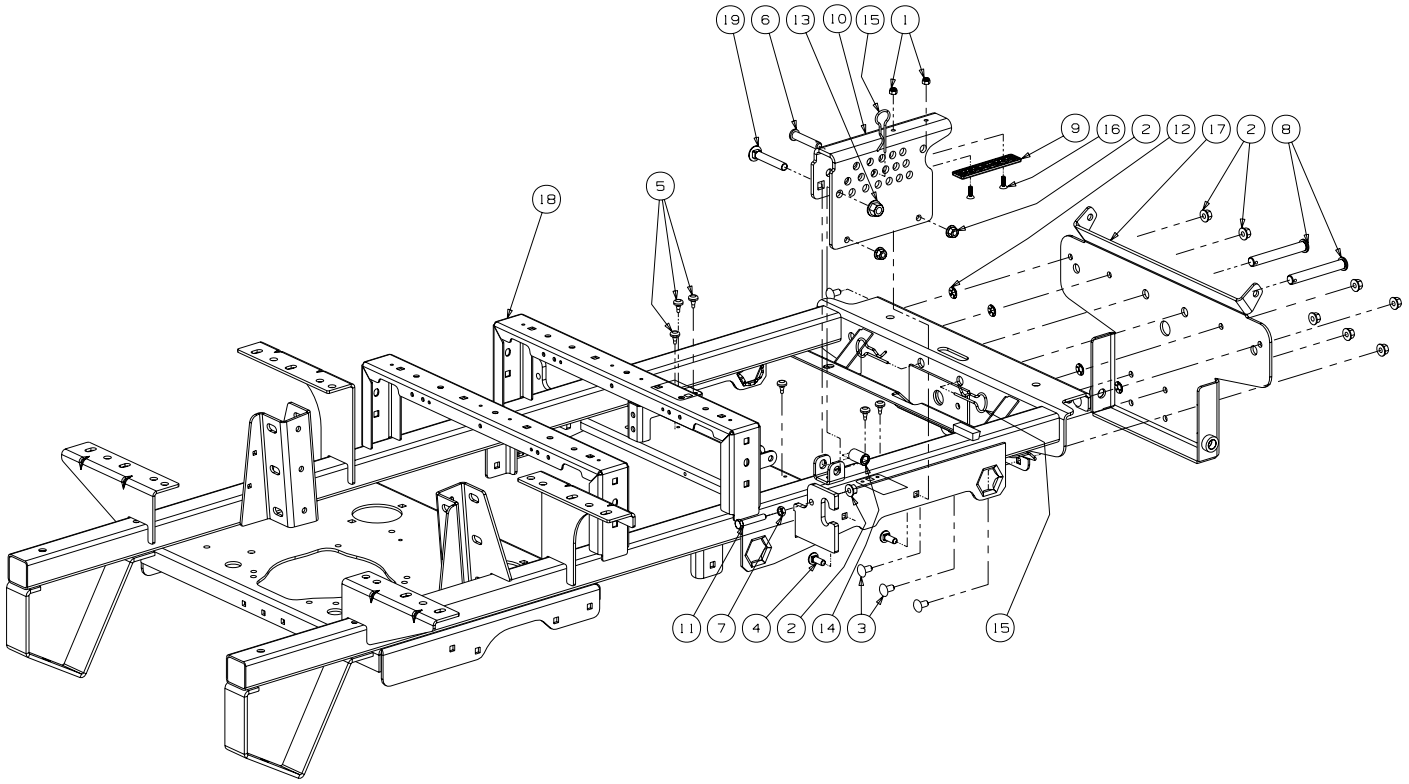

GD: 02004641-10/08/08

Ref. No.	Part No.	Description	Qty.
1	00012152	Lock Nut w/Nylon Insert	2
2	00022560	Hex Nut, 3/8-16 Flange Lock	10
3	01000372	Carriage Bolt, 3/8-16 x .75 Long	7
4	710-3168	Carriage Bolt, 3/8-16 x 1	2
5	01001170	Rubber Bumper, .62 OD x .22 Thick	6
6	01001776	Clevis Pin, .500 Dia. x 2.50 Lg.	1
7	01002511	Nut, 3/8-16, Jam	1
8	01003282	Clevis Pin, .625 Dia x 4.375 Long	2
9	02003749	Wear Plate, 1.25 x 5.00	1
10	02005101	Lift Index Bracket	1
11	01005810	Hex Cap Screw 3/8-16 x 2.00	1
12	01008225	Push Retainer, 3/8	4
13	01010119	Nut, 1/2-13, Flangelock	1
14	02002655	Spacer, .51 ID x .75 OD x 1.40	1
15	02003074	HitchPin, .120 Dia. x 3.0	3
16	02003505	Flat Head Cap Screw, 1/4-20 x .75	2
17	680-00063	Bracket Assembly, Frame, Front	1
18	02003536	Frame Assembly	1
19	02003563	Carriage Bolt, 1/2-13 x 3.00	1

48" Fabricated Cutter Deck - Figure 2

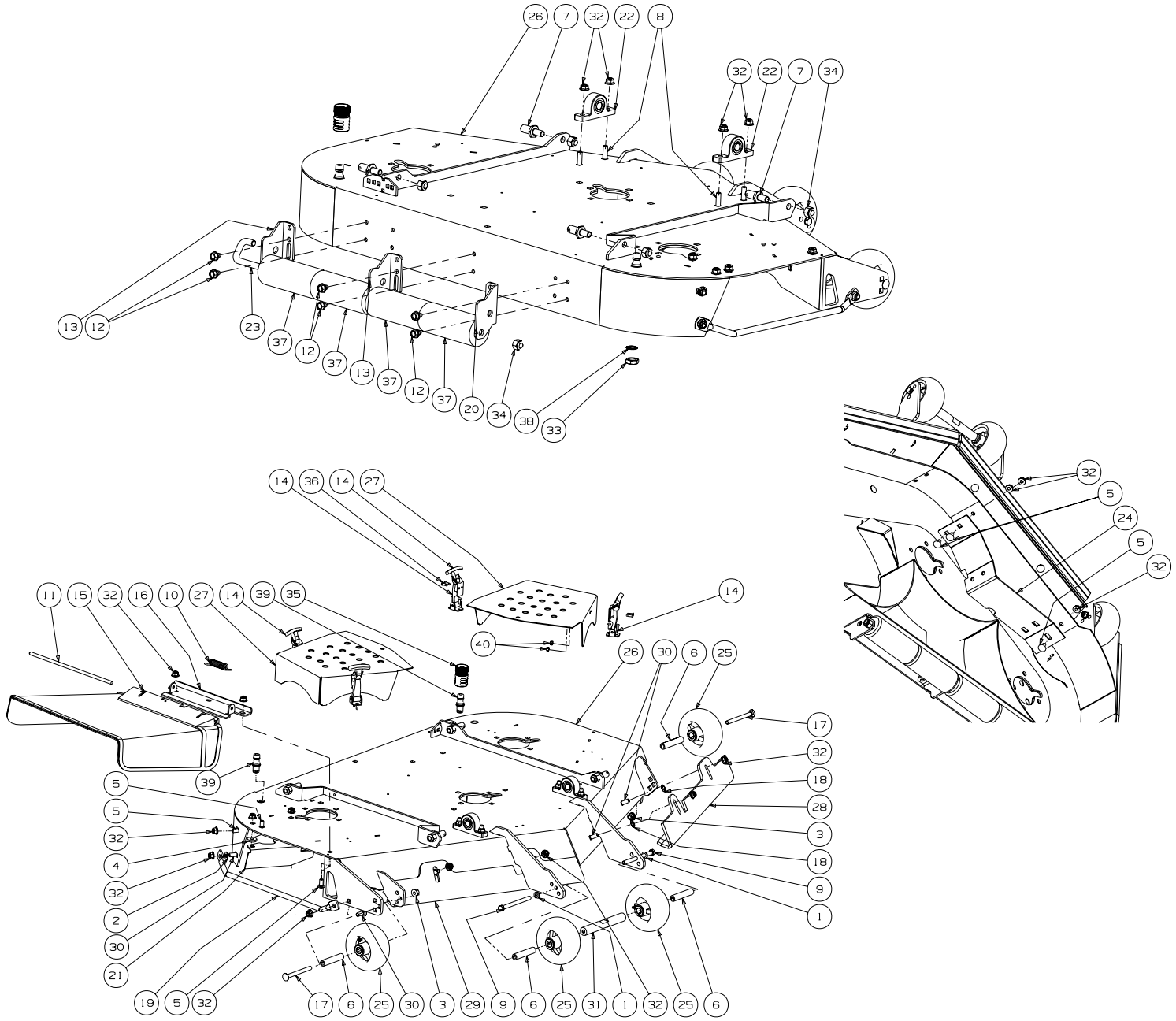

GD: 853-000010-11/14/08

48" Fabricated Cutter Deck - Parts List for Figure 2

Ref. No.	Part No.	Description	Qty.
1	00012157	Lock Washer, 3/8	2
2	00012158	Flat Washer, 3/8	1
3	00022560	Flange Lock Hex Nut, 3/8-16	2
4	00083192	Idler Washer	1
5	01000372	Carriage Bolt, 3/8-16 x .75 Lg.	6
6	01000398	Wheel Spacer	4
7	01001745	Pin, 5/8 Dia. x 1.2 Lg.	4
8	01002010	Carriage Bolt, 3/8-16 x 1.25	4
9	01002539	Hex Cap Screw, 3/8-16 x 4.50	2
10	01003253	Torsion Spring, 0.4ID x 2.16Lg	1
11	01003254	Chute Deflector Rod	1
12	01004304	Hex Index Washer Screw, 3/8-16, .05	6
13	01004707	Deck Roller Mount Bracket	2
14	01005869	T-Handle Latch Draw	4
15	01006693	Deflector Chute	1
16	01006748	Deflector Chute Bracket	1
17	01008049	Carriage Bolt, 3/8-16 x 4.00	2
18	01008225	Push Retainer	4
19	01008644	Finger Guard	1
20	01008790	Deck Roller Mounting Bracket, Right Hand	1
21	01009296	Chute Baffle	1
22	02000109	Pillow Block, Steel	2
23	02002799	J-Hook w/ Threaded Roller	1
24	02005695	48" Adjustment Baffle	1
25	634-3159	Complete Wheel, 5.00 Dia.	4
26	680-00039	48" Deck Assembly	1
27	703-06871	Deck Belt Cover	2
28	703-07121	Left Hand Front Adjustment Skirt	1
29	703-07122	Right Hand Front Adjustment Skirt	1
30	710-3168	Carriage Bolt, 3/8-16 x 1	8
31	711-05159	Ball Wheel Mounting Shaft	1
32	712-04065	Lock Nut, Nylon Insert, 3/8-16	18
33	712-0641	Hex Nut, M16-1.5	2
34	712-3083	Lock Nut, Nylon Insert, 1/2-13	6
35	721-04041	Water Nozzle Adaptor	1
36	00017778	Phillips Head Screw, #10-32 x 1/2	16
37	731-3005	Front Roller	4
38	736-0760	Lock Washer, 17 x 23.8 x 1.95	2
39	737-04003D	Deck Water Nozzle	2
40	00014608	Lock Nut, Nylon Insert, #10-32	16

48" Fabricated Deck Spindle Assembly - Figure 3

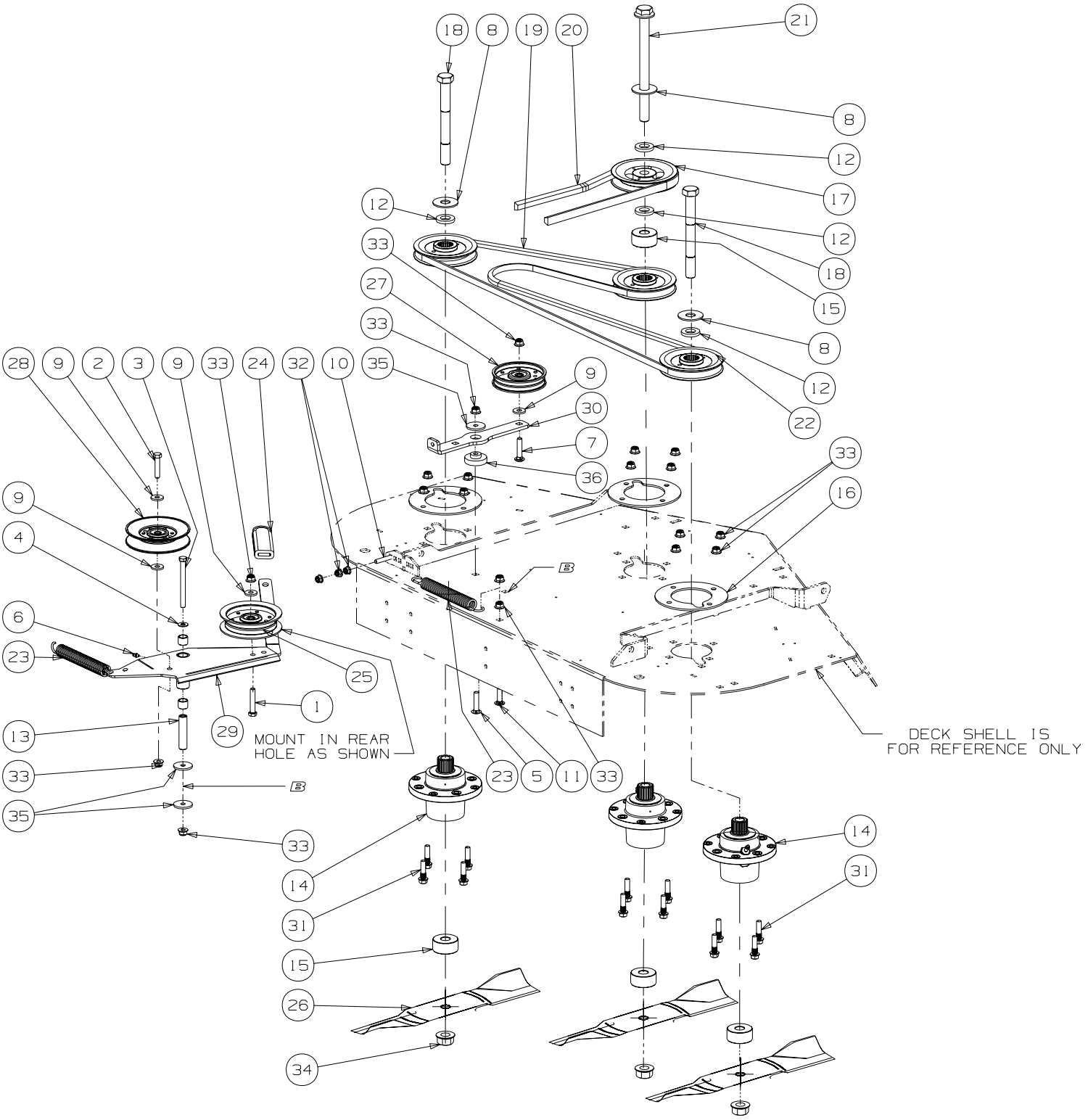

GD: 853-000011-11/25/08

48" Fabricated Deck Spindle Assembly - Parts List for Figure 3

Ref. No.	Part No.	Description	Qty.
1	00002528	Hex Cap Screw, 3/8-16 x 2.00	1
2	00008495	Hex Cap Screw, 3/8-16 x 1-3/4	1
3	00011925	Hex Cap Screw, 3/8-16, 4.00	1
4	00012158	Washer, 3/8	1
5	00030276	Carriage Bolt, 3/8-16 x 1-1/2	1
6	00060078	Grease Fitting, 1/4-28 x 3/16	1
7	01000364	Hex Carriage Screw, 3/8-16, 1.75	1
8	01000392	Flat Washer, .781 ID 2.00 OD, .105	3
9	01000723	Flat Washer, .406 ID, 1.0 OD, .105	4
10	01000956	Carriage Bolt, 5/16-18 x 1.75	1
11	01002010	Carriage Bolt, 3/8-16 x 1.25	1
12	01003123	Spacer .812 ID x .268 LG	4
13	01003245	Spacer, .39 ID x .625 OD x 2.75	1
14	01003532	Aluminum Spindle Assembly	3
15	01004415	Spacer, .760 ID x 2.000 OD x .900	4
16	01004478	Spindle, Aluminum Cast Support Plate	3
17	01005201	V-Pulley 5.25 OD	1
18	01005213	Hex Cap Screw, 3/4-16, 7.00	2
19	01005374	V-Belt, A Section x 105.3	1
20	01005378	V-Belt, B Section x 87.2	1
21	01005388	Hex Cap Screw, 3/4-16, 9.00	1
22	01005616	V-Pulley, 5.00 OD	3
23	02003712	Extension Spring, .94 OD x 7.57 LG	2
24	02003740	Idler Tension Handle Grip	1
25	02004447	Idler Pulley, 4.06 OD w/Deep Flange	1
26	02005017	Blade, 17.0, Hi-Lift, 0.756 ID	3
27	02005077	Idler Pulley, 4.06 Dia.	1
28	02005079	Idler Pulley, 5.06 Dia.	1
29	02005509	Idler Arm Assembly includes:	1
	01000308	Bearing	2
30	703-07010	Idler Arm	1
31	710-04829	Bolt, 3/8-16 x 1.50	12
32	712-04063	Nut, Nylon Insert, 5/16-18	3
33	712-04065	Nut, Nylon Insert, 3/8-16	19
34	712-3078	Nut, 3/4-16, Flangelock	3
35	736-0227	Washer, .390 x 1.50 x .134	3
36	738-04376	Shoulder Spacer, .854 x .280	1

Hydro Hose and Pump Assembly - Figure 4

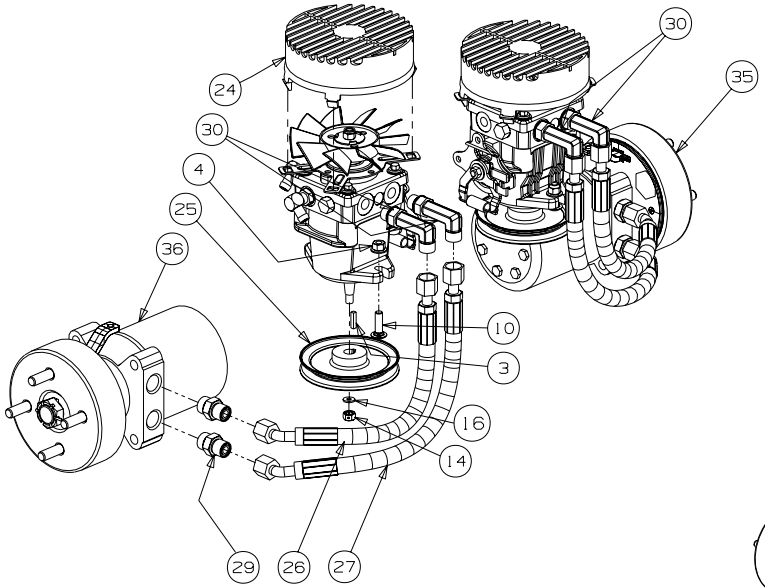

Pump & Motor Systems

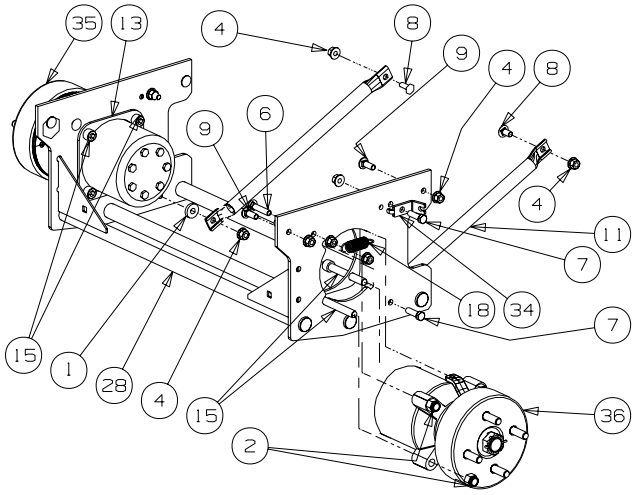

Motor Mount Systems

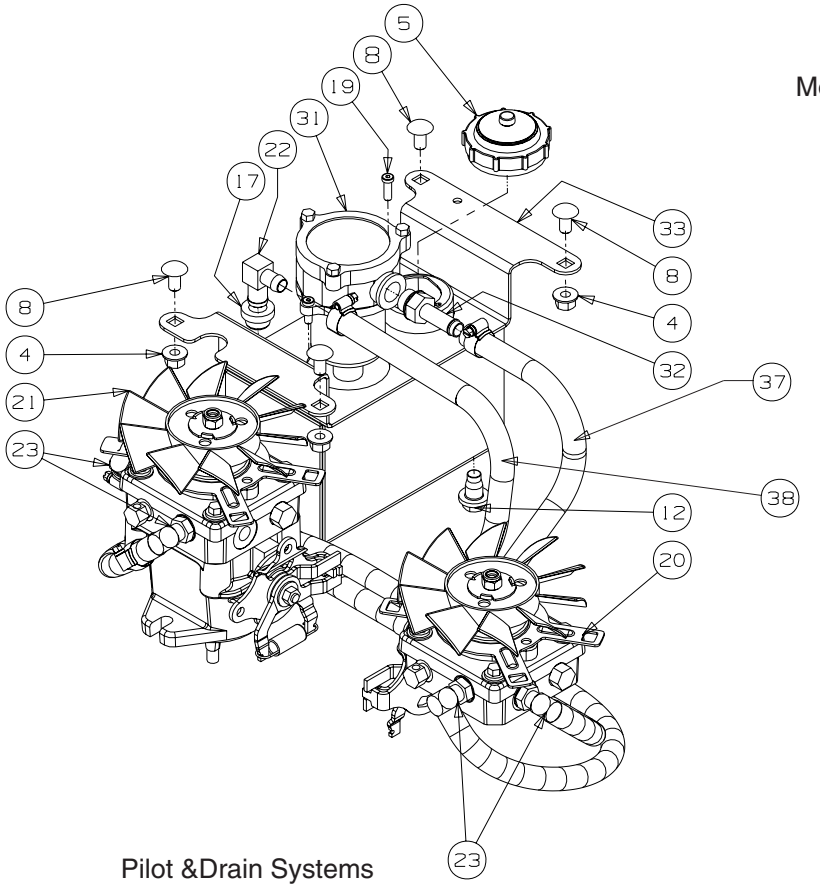

Pilot &Drain Systems

GD: 02004444-04/07/08

Hydro Hose and Pump Assembly- Parts List for Figure 4

Ref. No.	Part No.	Description	Qty.
1	00083192	Idler Washer	2
2	712-3083	Washer lock 3/8 zinc	8
3	00020628	Key, 3/16" x 7/8"	2
4	00022560	Flange Lock Hex Nut, 3/8-16	22
5	00030261	Cap, Hydro Oil Tank	1
6	01000364	Hex Carriage Screw, 3/8-16, 1.75	2
7	710-3005	Hex Cap Screw, 3/8 -16 x 1.25	4
8	01000372	Carriage Bolt, 3/8-16 x .75 LG.	6
9	710-3168	Carriage Bolt, 3/8-16 x 1	4
10	01002010	Carriage Screw, 3/8-16 x 1.25	4
11	01002593	Strut Frame	2
12	01004192	Oil Pan Drain Plug w/ Seal	1
13	01006948	Hydro Wheel Motor Backup Plate	2
14	01007309	Hex Nut, 3/8-24	2
15	01007791	Socket Head Capscrew, 1/2-13; 3-1/2	8
16	00006168	Flat Washer, 3/8	2
17	02000296	Grommet Fitting, .54 ID x .78 OD	1
18	02000401	Spring Extension, .740 OD x 2.656	2
19	02000841	Socket Low Head Cap Screw, 1/4-20 x 0.75	2
20	02000905	Hydro Pump, BDP-12, RH	1
	01009631	Kit, Fan	1
21	02000906	Hydro Pump, BDP-12, LH	1
	01009631	Kit, Fan	1
22	02001151	Fitting Elbow Spur, 5/8 x 1/2	1
23	02001160	Fitting Elbow, 9/16 x 1/2	4
24	02001169	Fan Pump Shroud	2
25	02001172	Hydro Pump Pulley	2
26	02001176	Short Pressure Hose Assembly	2
27	02001177	Long Pressure Hose Assembly	2
28	02004429	Hydro Motor Frame Assembly	1
29	02001715	Adaptor Fitting, 8 x 10	4
30	02002003	Adaptor, 8 x 8	4
31	02002257	Hydraulic In-Tank Filter includes:	1
	02002258	Replacement Filter	1
32	02002557	Fitting, 3/4 ORB x 1/2 Tube	1
33	02002701	Hydraulic Tank Assembly	1
34	02003826	Rear Cable Mounting Bracket	2
35	02004442	Hydro Motor, Left Hand Assembly w/ Brake & Drum	1
36	02004441	Hydro Motor, Right Hand Assembly w/ Brake & Drum	1
37	02001872	Hose Assembly, Pilot inlcudes:	1
	02001175	Tee Fitting, 1/2	1
	02002392	Hose Clamp, 1/2	3
	--	Fuel Hose, .50 ID x .75 OD (in inches)	43
38	02001873	Hose Assembly, Drain inlcudes:	1
	02001175	Tee Fitting, 1/2	1
	02002392	Hose Clamp, 1/2	3
	--	Fuel Hose, .50 ID x .75 OD (in inches)	36

NOTE: Lubricant, 02002058 Quarts, 2.00

Brake Assembly - Figure 5

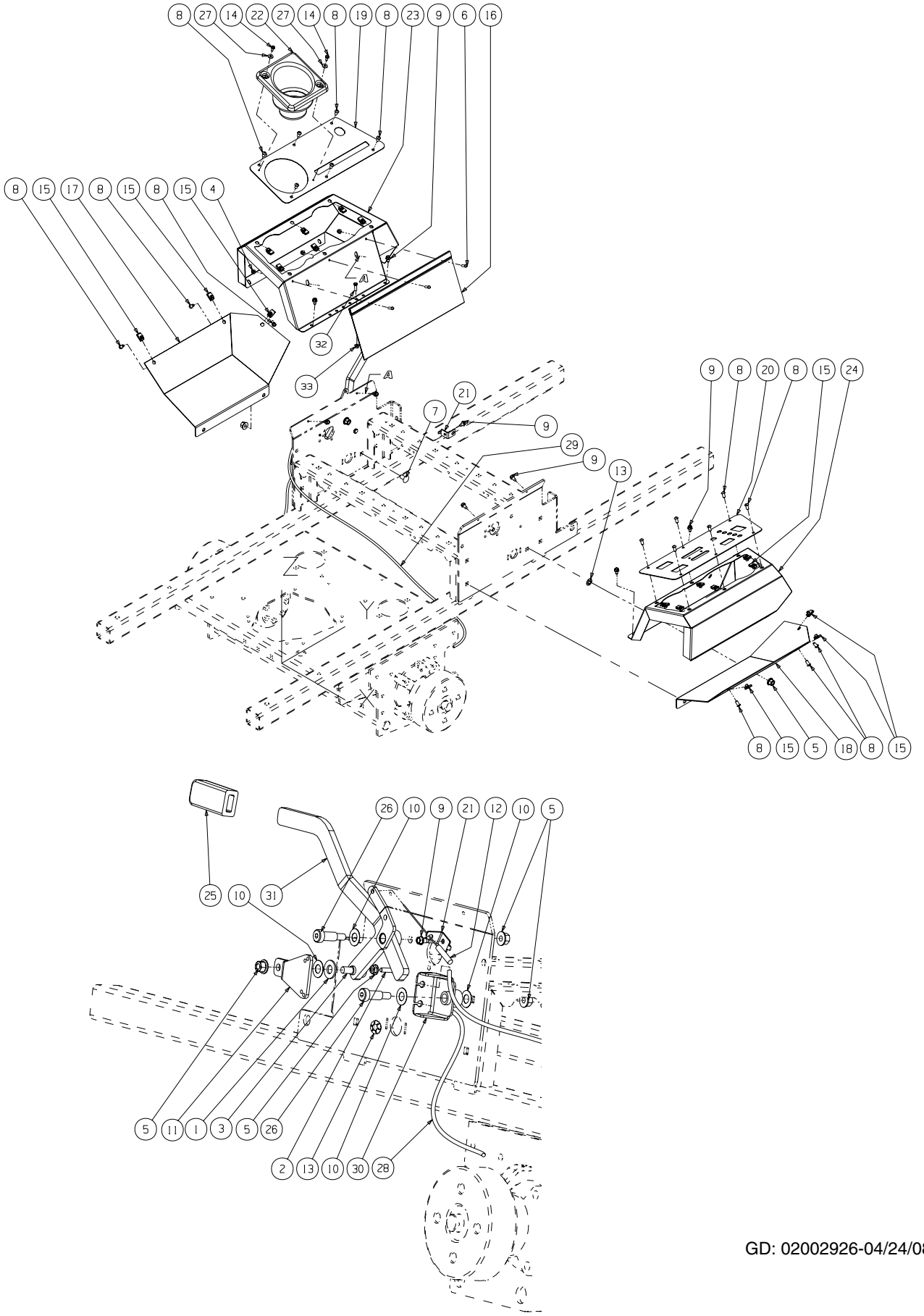

GD: 02002926-04/24/08

Brake Assembly - Parts List for Figure 5

Ref. No.	Part No.	Description	Qty.
1	00012577	Washer, 1/2 Zinc	1
2	710-3168	Carriage Bolt, 3/8-16, 1.00	1
3	00011450	Shoulder Bolt, 1/2 x 1/2	1
4	00014608	Lock Nut, Nylon Insert, 10-32	3
5	00022560	Flange Lock Hex Nut, 3/8-16	6
6	00030906	Phillips Head Machine Screw, 10-32 x 5/8	3
7	01000372	Carriage Bolt, 3/8-16 x .75	2
8	01000443	Screw Button Head, 1/4-20 x .5	18
9	01000628	Screw, TT, 1/4-20, 0.5, Hex Index Washer	10
10	01000930	Washer, .508 ID x 1.0 OD x .020	4
11	02003841	Centering Bracket	1
12	01008198	Left Hand Brake Cable	1
13	01008225	Push Retainer, 3/8	2
14	01008531	Screw, #10-32 x 0.500	2
15	01008539	U-Nut, 1/4-20	18
16	02000362	Bag, Debris Storage	1
17	02002785	Lower Panel, LH	1
18	02002786	Lower Panel, RH	1
19	02002806	Control Panel Cover, LH	1
20	746-04544	Control Panel Cover, RH	1
21	02002864	Brake Cable Mounting Bracket	2
22	02002874	Cup Holder	1
23	02002969	Control Panel, LH	1
24	02002970	Control Panel, RH	1
25	02003010	Parking Brake Grip	1
26	02003603	Shoulder Bolt, 1/2 x 1.00, 3/8-16	2
27	02003725	Washer, 3/16	2
28	02003770	Brake Cable, LH	1
29	02003774	Brake Cable, RH	1
30	02003776	Brake Cable Bracket	1
31	02005151	Brake Lever	1
32	710-3015	Screw, Hex, Cap, 1/4-20 x .75	1
33	01002766	Lock Nut, 1/4-20	1

Fuel Tank Assembly - Figure 6 and Parts List

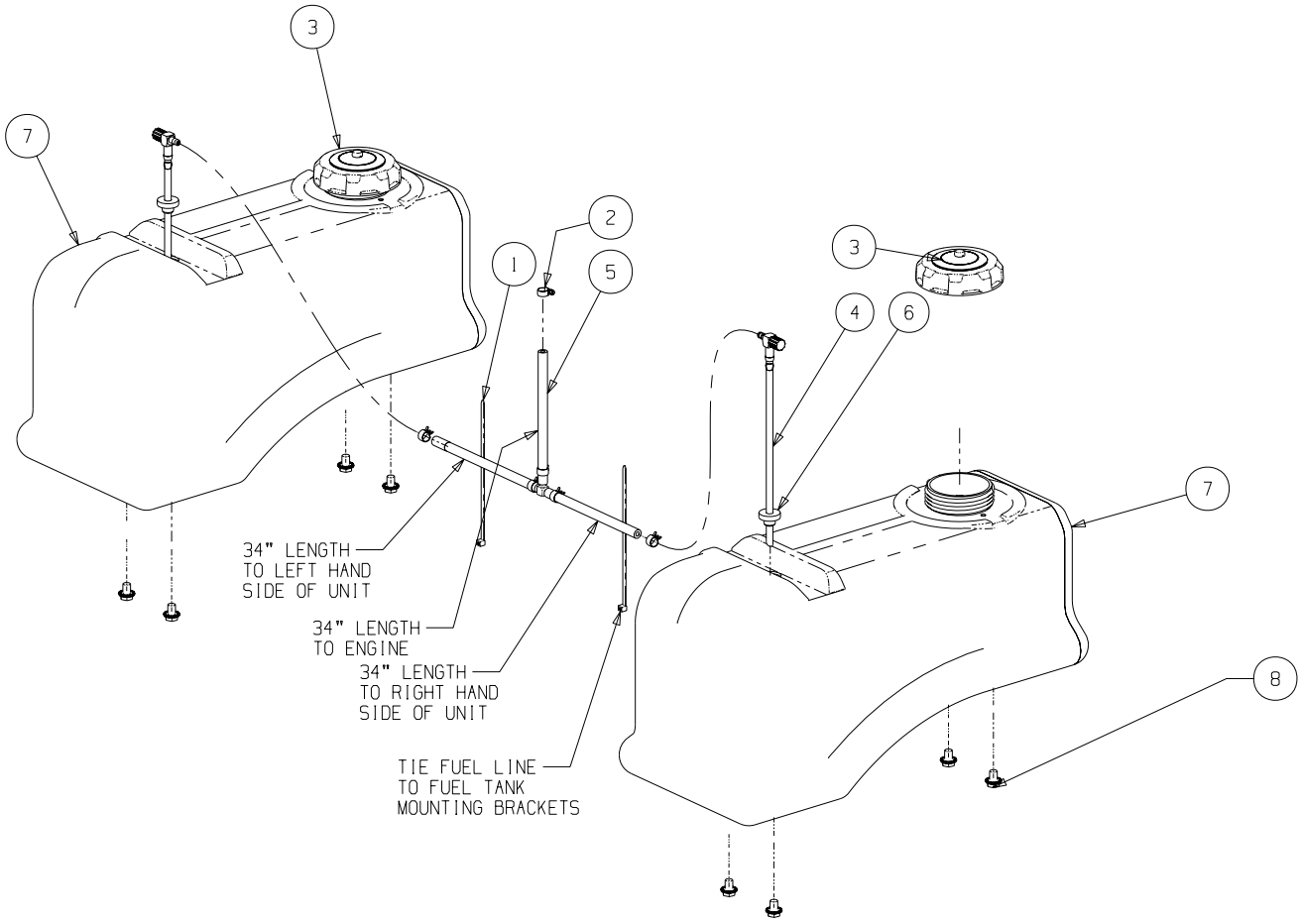

GD: 02001910-08/01/08

Ref. No.	Part No.	Description	Qty.
1	00012470	Cable Tie	2
2	01000215	Hose Clamp, SAE #4: 1/4-5/8, SS	1
3	751-3124D	Fuel Cap, 3.5	2
4	01007425	Fuel Fitting	2
5	02001908	Fuel Hose Assembly includes:	1
	--	Hose, 1/4" Fuel Line (in inches)	102
	00012235	Clamp, Union	5
	01003473	Tee Fitting, Fuel	1
6	02002253	Grommet, Fuel Tank	2
7	02003842	Fuel Tank	2
8	02005013	Hex Cap Screw, 3/8-16 x .50 Flange Whiz	8

Rear Bumper - Figure 7 and Parts List

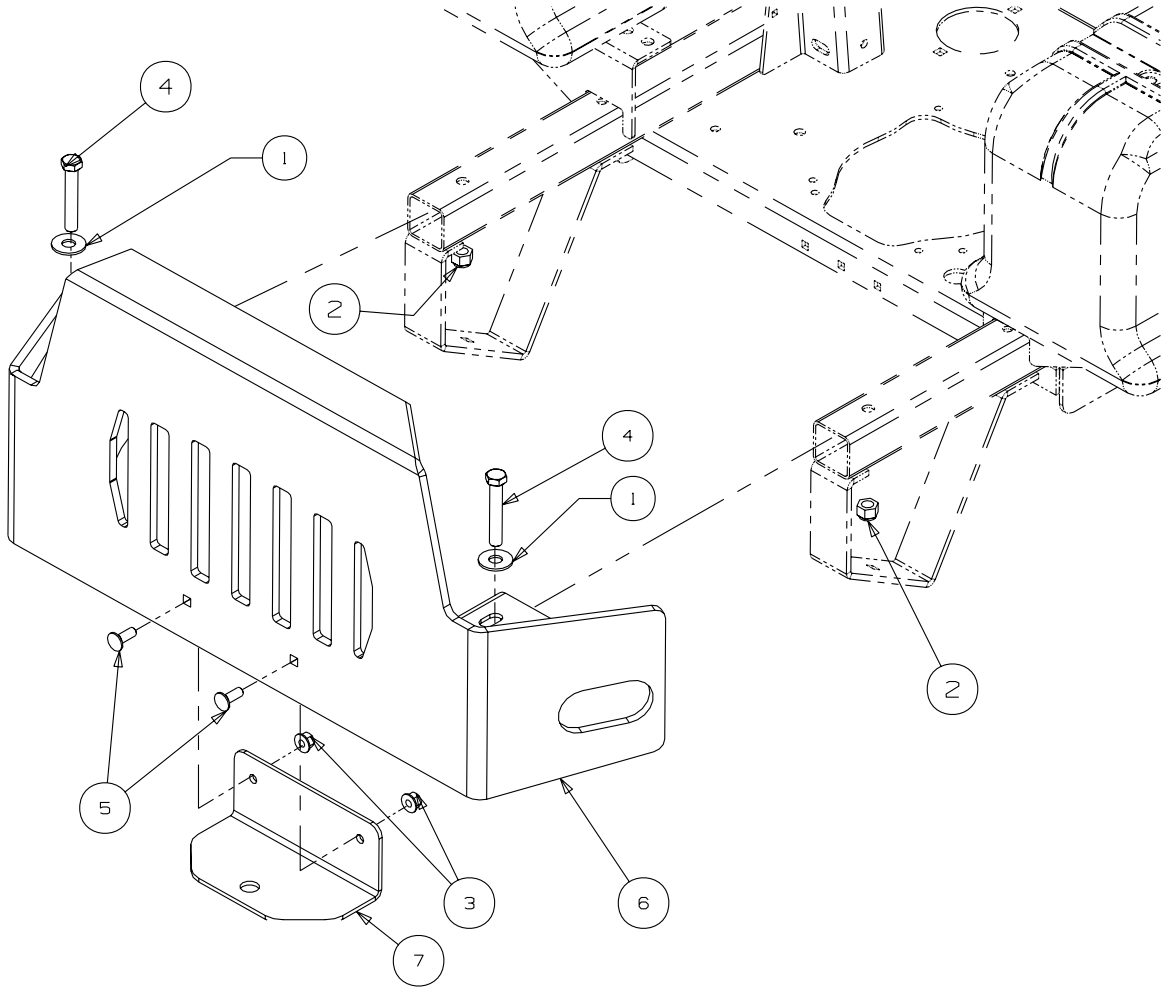

GD: 02005021-04/16/08

Ref. No.	Part No.	Description	Qty.
1	00011459	Flat Washer, 1/2	2
2	712-3083	Hex Nut, 1/2-13, Insert Lock	2
3	00022560	Nut, Hex 3/8-16 Flange Lock	2
4	00030046	HHCS, 1/2-13, 3.00	2
5	710-3168	Carriage Bolt, 3/8-16 x 1.00	2
6	02004118	Bumper Assembly	1
7	02004120	Hitch Bracket	1

Front Caster Assembly - Figure 8

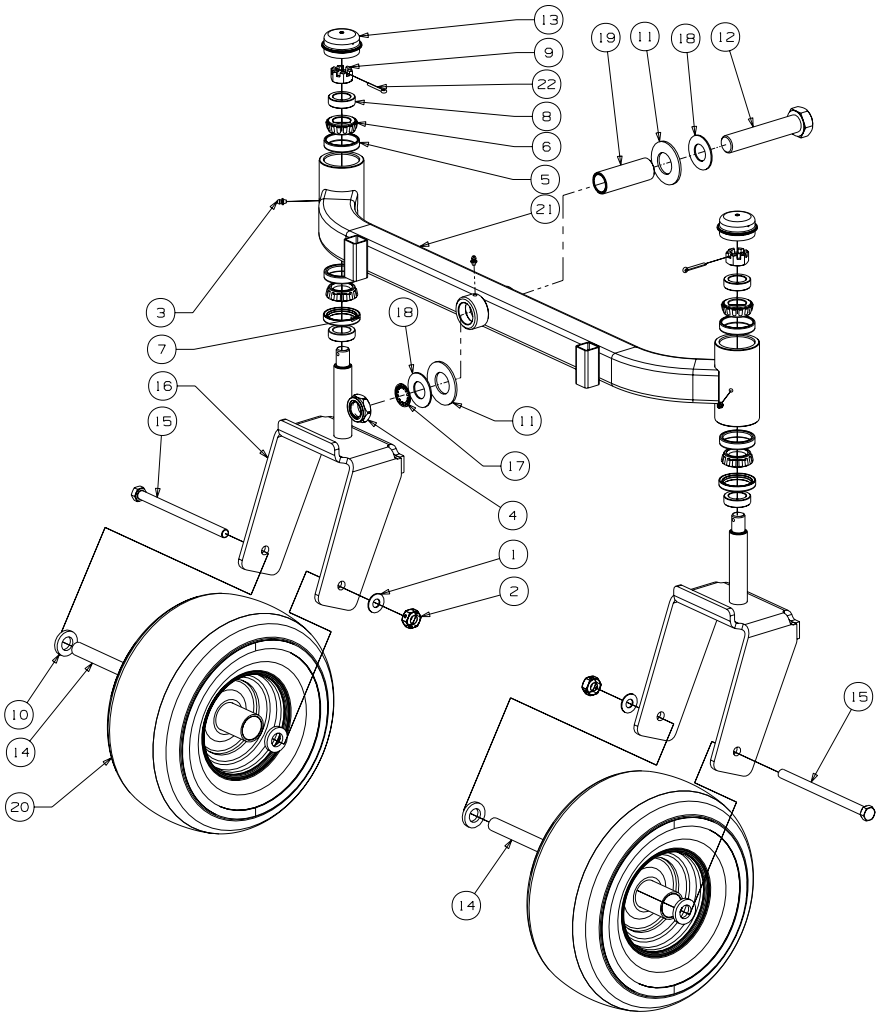

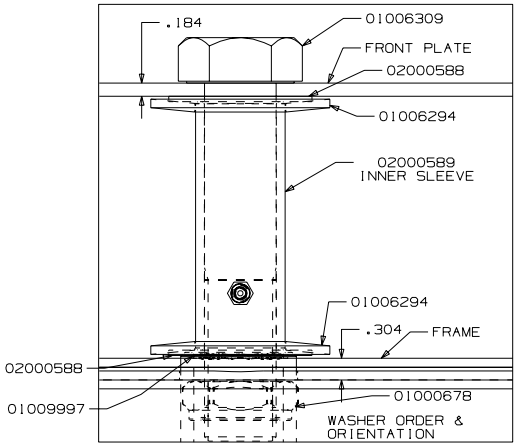

GD: 02002600-06/17/08

Front Caster Assembly - Parts List for Figure 8

Ref. No.	Part No.	Description	Qty.
1	00012577	Washer, 1/2 x 1 Shim	2
2	00023287	Nut, 1/2-20, Center Lock	2
3	00060078	Grease Fitting, 1/4-28 x 3/16	3
4	01000678	Nut, Jam, 1.0-14, Insert Lock	1
5	01002620	Cup Bearing	4
6	01002621	Bearing Cone	4
7	01002622	Seal	2
8	01002624	Ring Seal	4
9	01002626	Slotted Nut, 3/4-16	2
10	01003123	Spacer, .812 ID x .218LG	4
11	01006294	Bell Washer, 1.25 ID x 2.5 x .157	2
12	01006309	Hex Cap Screw, 1-14 x 5.0	1
13	01006347	Grease Cap, 1.986 OD	2
14	01006912	Wheel Spacer	2
15	01006961	HHCS, 1/2-20, 7.50	2
16	01007342	Yoke, Caster Wheel	2
17	01009997	Retainer Extension, Self Locking	1
18	02000588	Flat Washer, 1.00 ID	2
19	02000589	Spacer, 1.005 ID x 1.25 OD x 3.6	1
20	02002821	Wheel, 13 x 6.50 x 6.0, Beige, includes:	2
	02002108	Tire	1
	02002106	Roller Bearings (per tire)	2
	02002107	Retainer Bushings (per tire)	2
21	680-00040	Front Axle Assembly	1
22	714-0162	Cotter Pin, 5/32, 1.25	2

Control Assembly- Figure 9

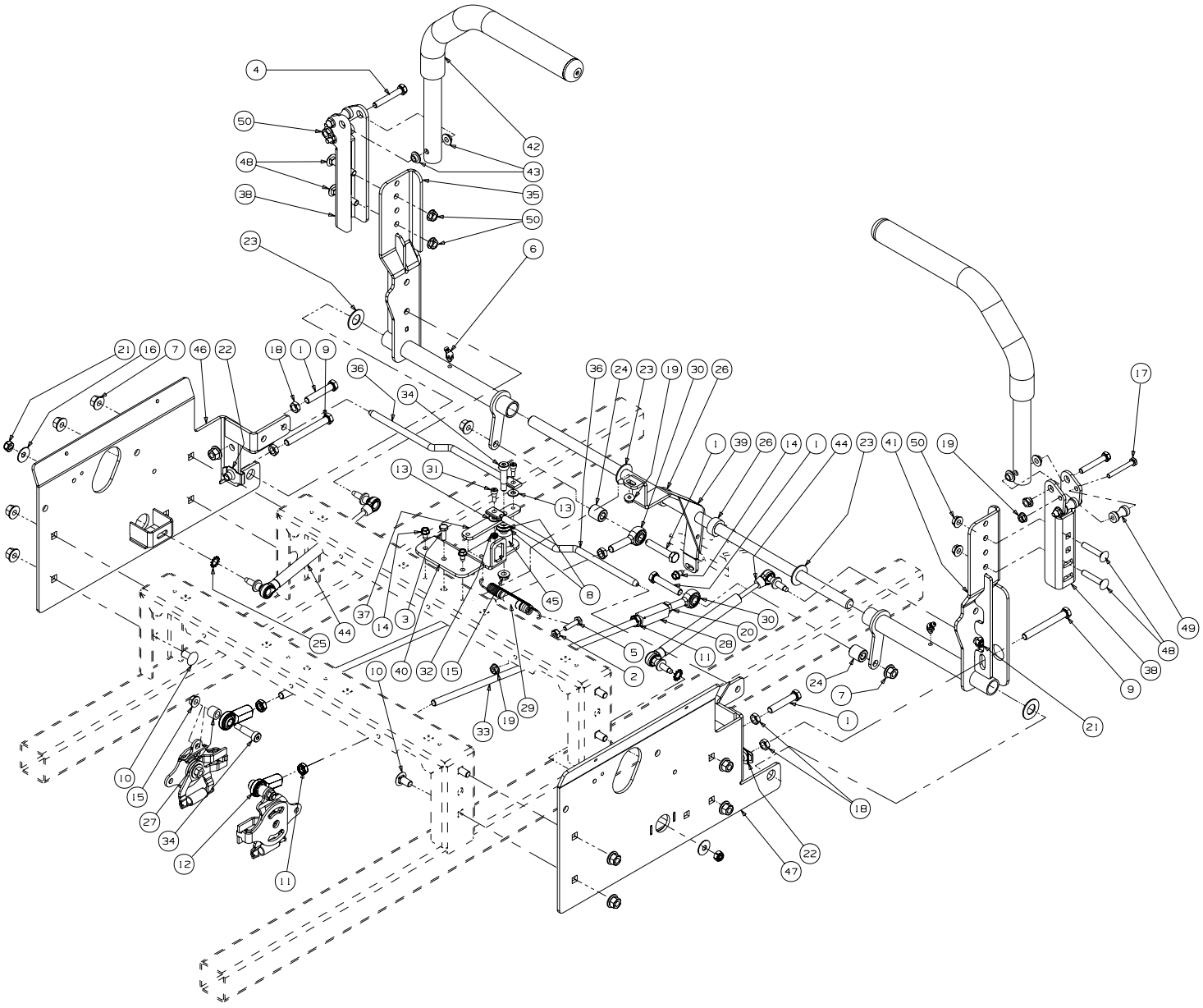

GD: 02005062-09/18/08

Control Assembly - Parts List for Figure 9

Ref. No.	Part No.	Description	Qty.	Ref. No.	Part No.	Description	Qty.
1	00002528	Hex Cap Screw, 3/8-16 x 2.00	4	28	01007734	Turnbuckle	2
2	00012186	Hex Nut, 1/4-20	1	29	732-0470A	Extension Spring, .53 OD x 4.75	1
3	710-3015	Hex Cap Screw, 1/4-20, .75	1	30	01008367	B/Joint, 3/8-24, Left Hand Female	2
4	00013198	Hex Cap Screw, 5/16-18 x 2.00	2	31	01009322	Shoulder Bolt, 1/4 x 1/4	2
5	00013416	HHCS, 1/4-20 x 1.00	1	32	01009377	Nut w/ Star Washer, 10-24	2
6	00021958	Grease Fitting, 1/4-28, 45 degree	2	33	01009560	Control Rod, 3/8 x 17.312	2
7	00022560	Hex Nut, 3/8-16, Lock Flange	12	34	02000069	Screw, Shoulder Control Rod	3
8	00061053	Washer, 3/8, SS	2	35	02002931	Lapbar Control Assembly, LH	1
9	02003666	Hex Cap Screw, 3/8-16 x 3.50	2		01004265	Bearing	2
10	01000372	Carriage Bolt, 3/8-16 x .75	8	36	02002542	Brake/Control Rod	2
11	712-0711	Hex Jam Nut, 3/8-24	4	37	02002543	Lapbar Control Arm	1
12	01000451	B/Joint, 3/8-24, Right Hand Female	2	38	02004044	Lapbar Pivot Bracket	2
13	01000600	Flat Washer, 1.4 x .630 x .0515	2	39	02002555	Lapbar Control Shaft Assembly	1
14	01000628	Screw, TT, 1/4-20, 0.5, Hex Index Washer	3	40	02004382	Lapbar/Brake Control Mounting Bracket	1
15	01000635	Nut, Lock, HexFlange, 5/16-18	3	41	02002932	Lapbar Control Assembly, RH	1
16	01000960	Belle Washer, .325 x .930 x .045	2		01004265	Bearing	2
17	01006898	Hex Cap Screw, 1/4-20 x 2.00	4	42	02004049	Lapbar Assembly includes:	2
18	01002511	Nut, 3/8-16, Jam	4		02002662	Grip, 1.0	2
19	712-04064	Hex Flange Lock Nut, 1/4-20	6	43	02003419	Bushing, .310 x .172 x .688 x .06	4
20	01002986	Nut, 3/8-24, Jam, LH Third	2	44	02003653	Cylinder Return to Neutral	2
21	01003561	Nut, Hex, Center Lock, M8	4	45	02003664	Spacer, .405 ID x 1.0 OD x .72	1
22	01003947	U-Nut, 3/8-16, .75	2	46	02003883	Side Panel, Control, Left	1
23	01004003	Flat Washer, 5/8 Nylon	4	47	02003884	Side Panel, Control, Right	1
24	01004129	Spacer, .385 ID x .75 OD x .875	2	48	01000956	Carriage Bolt, 5/16-18 x 1.75	4
25	01005851	External Washer, 3/8	2	49	02003644	Spacer, .251 ID x .38 OD x 1.13 LG	4
26	01006350	Shaft Collar	2	50	712-04063	Nut, Lock, HexFlange, 5/16-18	6
27	01007312	Spacer, .625 OD x .385 ID x 1/2	2				

48" Wheel Assembly - Figure 10 and Parts List

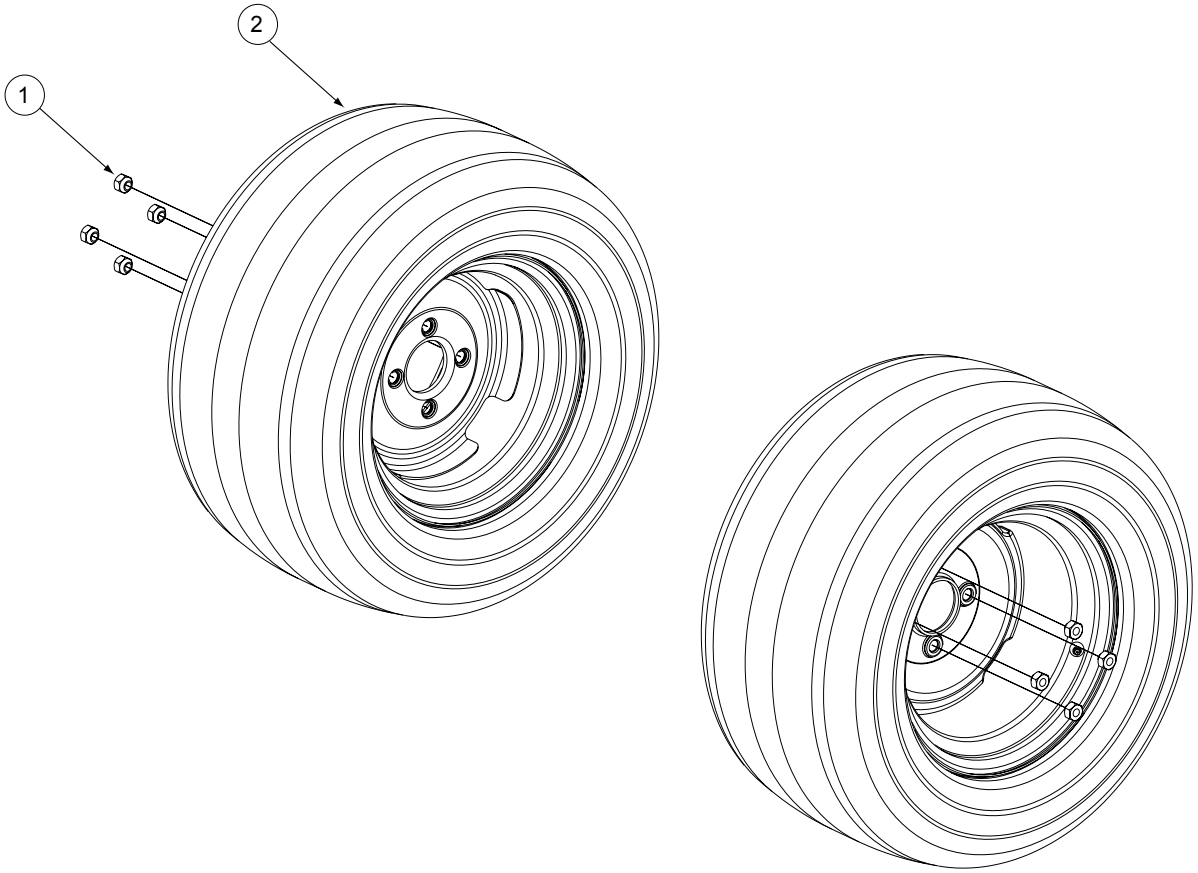

GD: 02002667-10/04/06

Ref. No.	Part No.	Description	Qty.
1	00012187	Lug Nut, 1/2-20	8
2	02002666	Wheel Assembly, 23 x9.5-12, Beige	2
		Includes:	
	02002104	Tire, 23 x 9.50-12	
		Rim, 12 Dia x 7.00 width	

Seat/Floor Panel Assembly- Figure 11 and Parts List

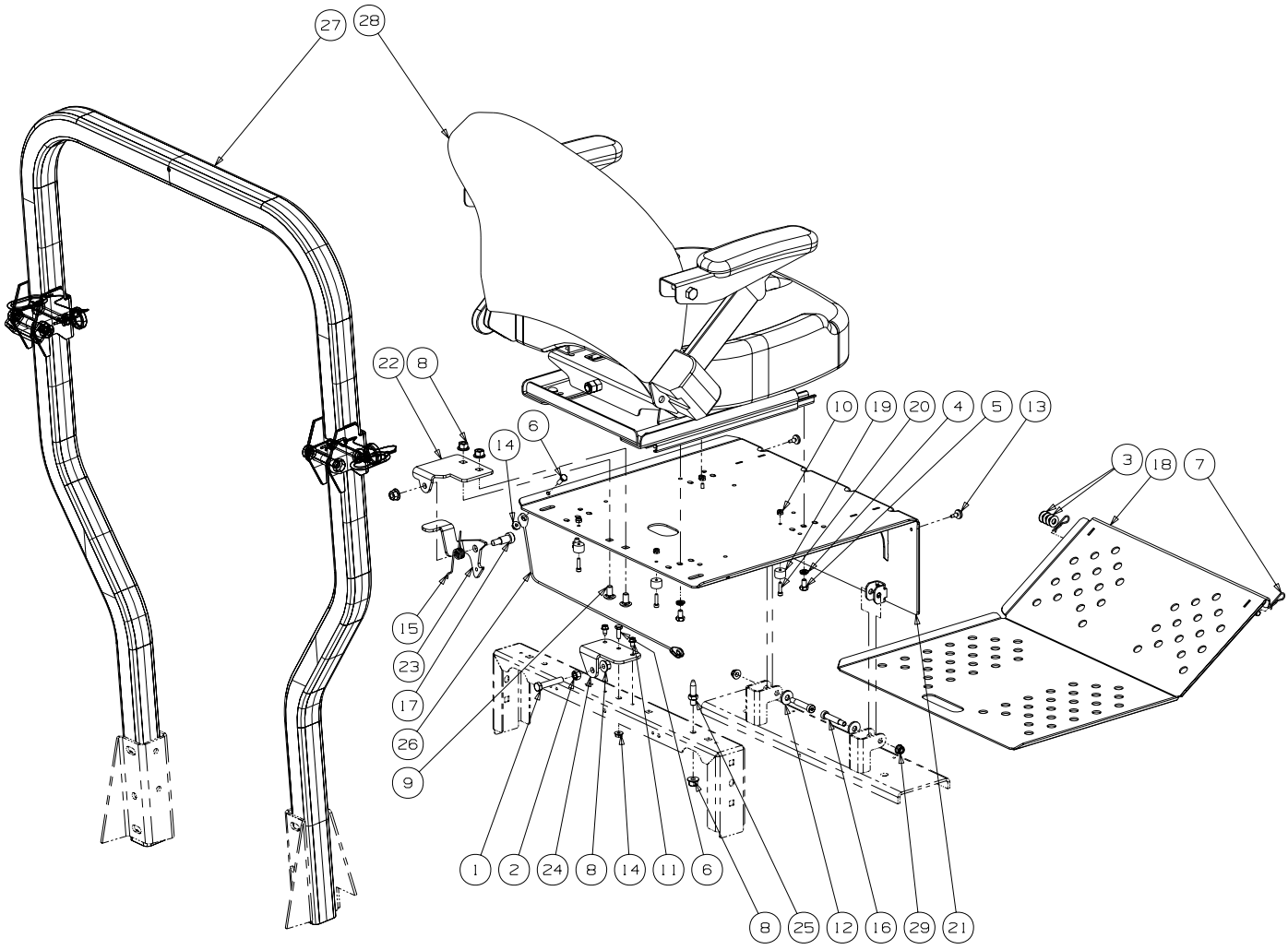

GD: 02005208-04/16/08

Ref. No.	Part No.	Description	Qty.	Ref. No.	Part No.	Description	Qty.
1	00002528	Hex Cap Screw 3/8-16 x 2.00	1	19	02002963	Rubber Stop with Washer	4
2	00006131	Hex Nut, 3/8-16	1	20	02002964	Standard Cap Screw, #10-24 x .75	4
3	00012158	Washer	AR	21	02003404	Seat Plate Assembly	1
4	736-0119	Lock Washer, 5/16	4	22	02003730	Seat Latch Bracket	1
5	00012178	Hex Cap Screw, 5/16-18 x 1/2	4	23	02003732	Latch Lever Bracket	1
6	710-3015	Screw, Hex, Cap, 1/4-20 x .75	2	24	02003738	Latch Bracket	1
7	00021956	Hair Pin, 3/8-1/2	2	25	02003745	Adjustable Stud	1
8	00022560	Flange Lock, Hex Nut, 3/8-16	5	26	02004062	Cable Support	1
9	01000372	Carriage Bolt, 3/8-16 x .75 Long	2	27	02005081	Foldable Rops Assembly includes:	1
10	712-0161	Nut, #10-24, Nylon Lock	4		02004323	Knob	2
11	01000628	Screw, TT, 1/4-20, 0.5, Hex Index Washer	2		02004324	Pin, Lock	2
12	01000723	Flat Washer, .406 ID, 1.0 OD, .105	2	28	02005209	Seat w/ Seat Belt & Suspension	1
13	01001170	Rubber Bumper, .62 OD x .22 Thick	2		01008364	Armrest Kit	
14	01002766	Lock Nut, 1/4-20	2			Seat Back Cover	
15	01008140	Deck Lift Spring, Left Hand	1			Seat Bottom Cover	
16	01009459	Shoulder Bolt, .375 x 1.50	2		02000767	Seat Switch Assembly	
17	02002091	Shoulder Bolt, 1/2 x 3/4, 3/8-16	1	29	712-04063	Flange Lock Nut, 5/16-18	2
18	02002334	Floor Panel Assembly	1				

23HP Kawasaki Engine Assembly - Figure 12

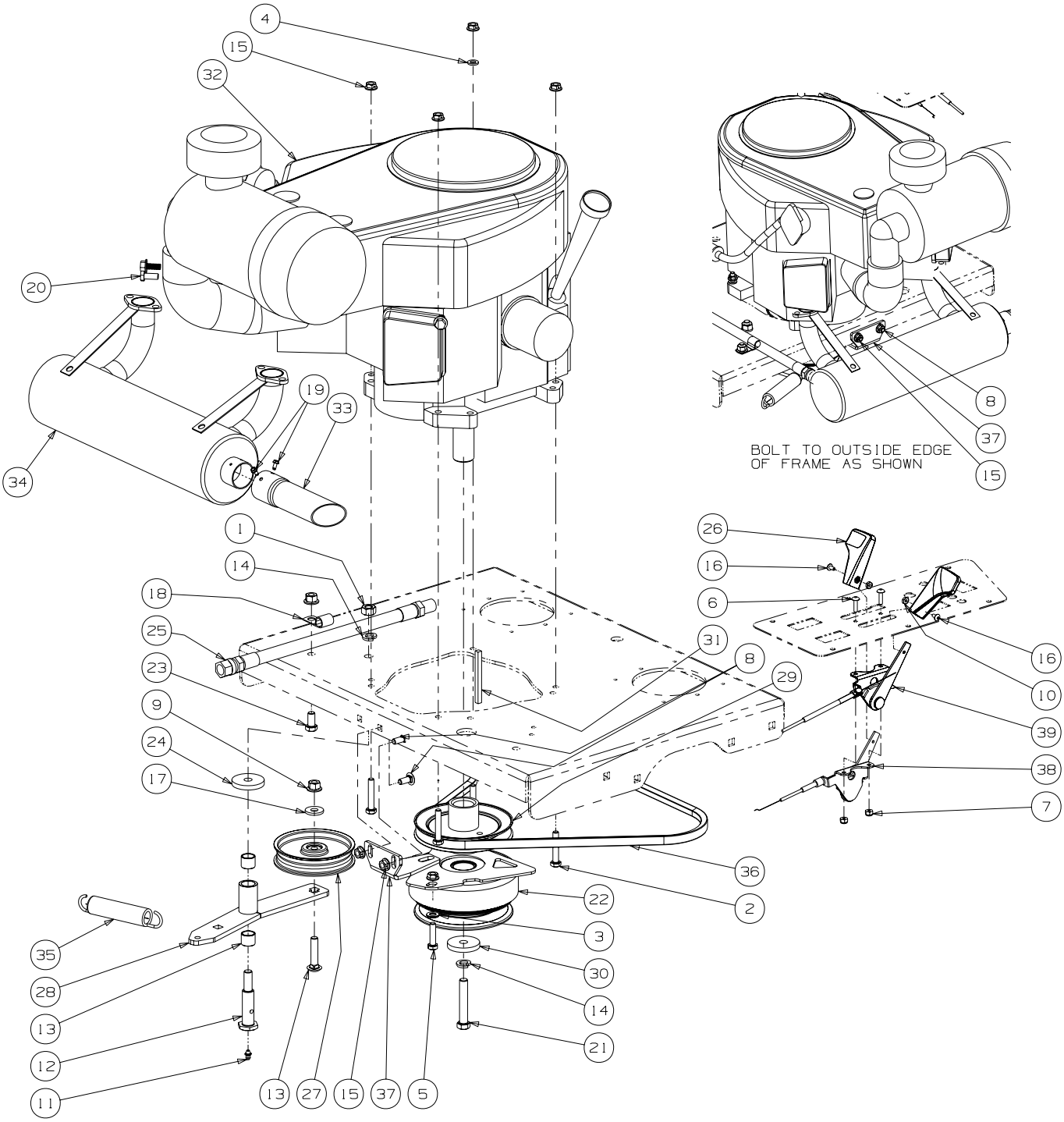

Description	Part Number
Air Filter	KM-11013-7019
Pre Filter	KM-11013-7020
Fuel Filter	KM-49019-7001
Oil Filter	KM-49065-2078
Spark Plug	KM-BPR4ES

GD: 02004943-09/04/08

23HP Kawasaki Engine Assembly - Parts List for Figure 12

Ref No	Part No.	Description	Qty.
1	00005763	Hex Nut, 7/16-14	1
2	00006129	HHCS, 5/16-18, 1-3/4	4
3	00009812	Flat Washer, 5/16	1
4	00012169	Flat Washer, .320 ID x .591 OD x .078	1
5	00013116	HHCS, 5/16-18 x 1-1/4	1
6	00014602	Round Hd. Machine Screw, 10-32 x 3/4	2
7	00014608	Lock Nut, Nylon Insert, 10-32	2
8	00020508	Carriage Bolt, 5/16-18 x .75	2
9	00022560	Flange Lock, Hex Nut, 3/8-16	2
10	00060056	Nut Washer, W/Star, 8-32	2
11	00060078	Grease Fitting, 1/4-28 x 3/16	1
12	01000302	Shoulder Screw, 7/16-14	1
13	01000364	Hex Carriage Screw, 3/8-16, 1.75	1
14	736-0171	Lock Washer, 7/16	2
15	01000635	Hexflange Lock Nut, 5/16-18	7
16	01000721	Machine Screw, 8-32, .375	2
17	01000723	Flat Washer, .406 ID, 1.0 OD, .105	1
18	01000728	Clip, Heat Shield Cable	1
19	01000811	Screw, #8-32 x 0.375	2
20	01000981	Hex Head Cap Screw, M10 x 1.25, 20mm	1
21	01001395	Capscrew, 7/16-20 x 2.50	1
22	02004878	Clutch Brake, 1.125 ID	1
23	01002601	Hex Cap Screw, 3/8-16, .750	1
24	01003269	Flat Washer, 7/16 ID x 1.75 OD x .25	1
25	01003283	Oil Drain Hose	1
26	731-04914	Control Throttle Knob	2
27	02005077	Flat Pulley with Flanges	1
28	02004075	Engine Idler Arm Assembly Includes:	1
	01000308	Bearing	2
29	01005104	Pump Drive Pulley	1
30	01005314	Flat Washer, 7/16 ID x 1.75 OD x .25	1
31	01005856	Key, 1/4 x 1/4 x 3	1
32	01008523	23HP Engine, Kawasaki	1
33	02005082	Muffler Accessory Exhaust Tube	1
34	01009299	Muffler Accessory, Kawasaki	1
35	01009635	Extension Spring, .98 OD x 5.00	1
36	01007015	V Belt, A Section x 51.2	1
37	02001992	Retainer Clutch Assembly, Ogura	1
38	02003421	Throttle, Control Cable	1
39	02003422	Choke, Control Cable, 43.0	1

Note: Engine Oil 15w40

25HP Kohler Engine Assembly - Figure 13

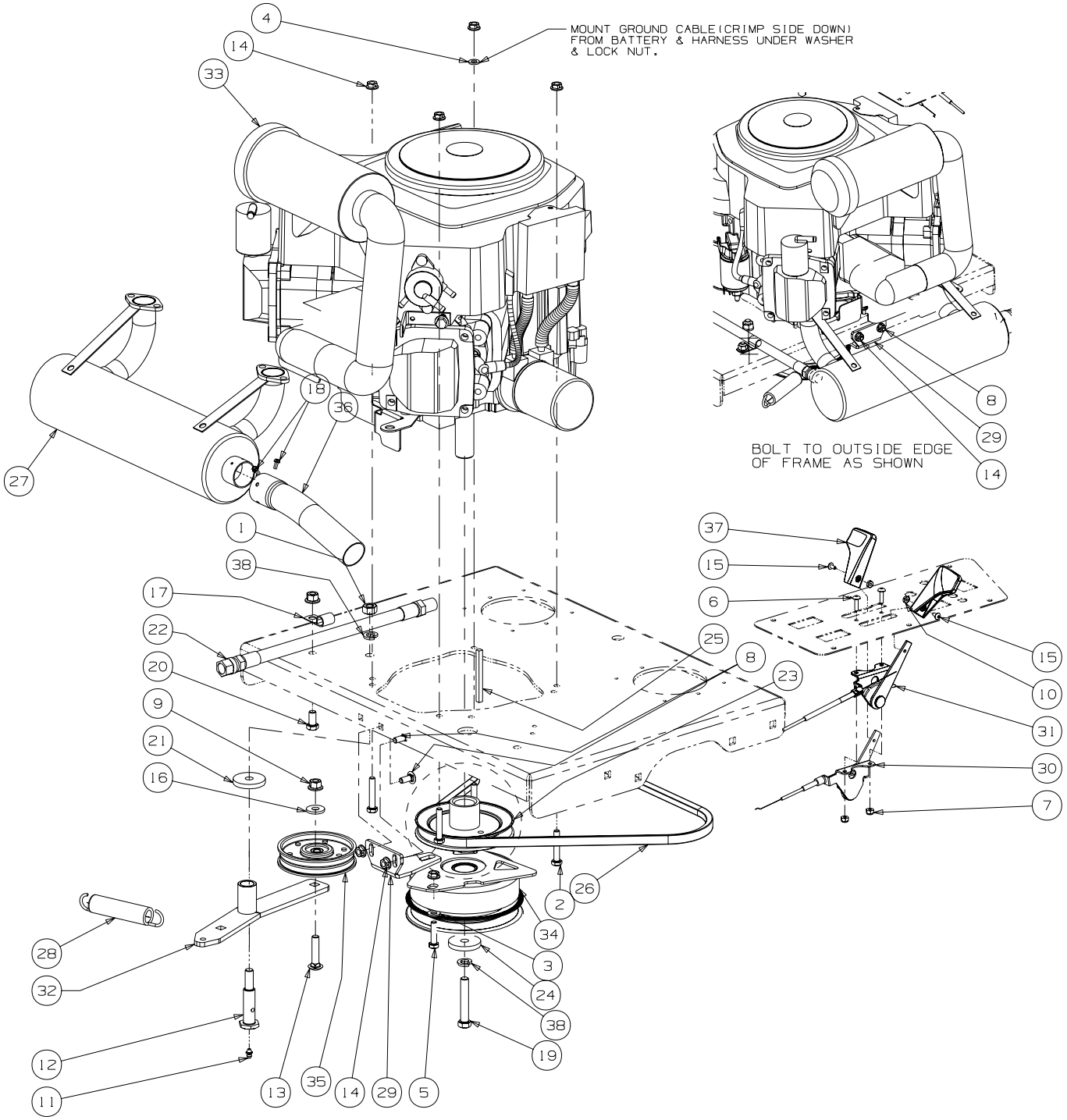

Description	Part Number
Air Filter (Primary)	KH-25-083-01-S
Air Filter (Safety)	KH-25-083-04-S
Fuel Filter	KH-25-050-08-S
Oil Filter	KH-12-050-08
Spark Plug	759-3336

GD: 853-000050-11/03/08

25HP Kohler Engine Assembly - Parts List for Figure 13

Ref No	Part No.	Description	Qty.
1	00005763	Hex Nut, 7/16-14	1
2	00006129	HHCS, 5/16-18, 1-3/4	4
3	00009812	Flat Washer, 5/16	1
4	00012169	Flat Washer, 5/16	1
5	00013116	HHCS, 5/16-18 x 1-1/4	1
6	00014602	Round Hd. Machine Screw, 10-32 x 3/4	2
7	00014608	Lock Nut, Nylon Insert, 10-32	2
8	00020508	Carriage Bolt, 5/16-18 x .75	2
9	00022560	Flange Lock, Hex Nut, 3/8-16	2
10	00060056	Nut Washer, W/Star, 8-32	2
11	00060078	Grease Fitting, 1/4-28 x 3/16	1
12	01000302	Shoulder Screw, 7/16-14	1
13	01000364	Hex Carriage Screw, 3/8-16, 1.75	1
14	01000635	Hexflange Lock Nut, 5/16-18	7
15	01000721	Machine Screw, 8-32, .375	2
16	01000723	Flat Washer, .406 ID, 1.0 OD, .105	1
17	01000728	Clip, Heat Shield Cable	1
18	01000811	Screw, #8-32 x 0.375	2
19	01001395	Capscrew, 7/16-20 x 2.50	1
20	01002601	Hex Cap Screw, 3/8-16, .750	1
21	01003269	Flat Washer, 7/16 ID x 1.75 OD x .25	1
22	01003283	Oil Drain Hose	1
23	01005104	Pump Drive Pulley	1
24	01005314	Flat Washer, 7/16 ID x 1.75 OD x .25	1
25	01005856	Key, 1/4 x 1/4 x 3	1
26	01007015	Belt, 51.2 Lg	1
27	01006566	Muffler Accessory Kohler	1
28	01009635	Extension Spring, .98 OD x 5.00	1
29	02001992	Retainer Clutch Assembly, Ogura	1
30	02003421	Throttle, Control Cable	1
31	02003423	Choke Control Cable	1
32	02004075	Engine Idler Arm	1
	01000308	Bearing	2
33	752KCV7303122	Engine, 25HP Kohler	1
34	02004878	Clutch Brake, 1.125 ID	1
35	02005077	Flat Pulley with Flanges	1
36	02005082	Muffler Accessory Exhaust Tube	1
37	731-04914	Control Throttle Knob	2
38	736-0171	Lock Washer, 7/16	2

Note: Engine Oil 15W40

Lift Assembly - Figure 14

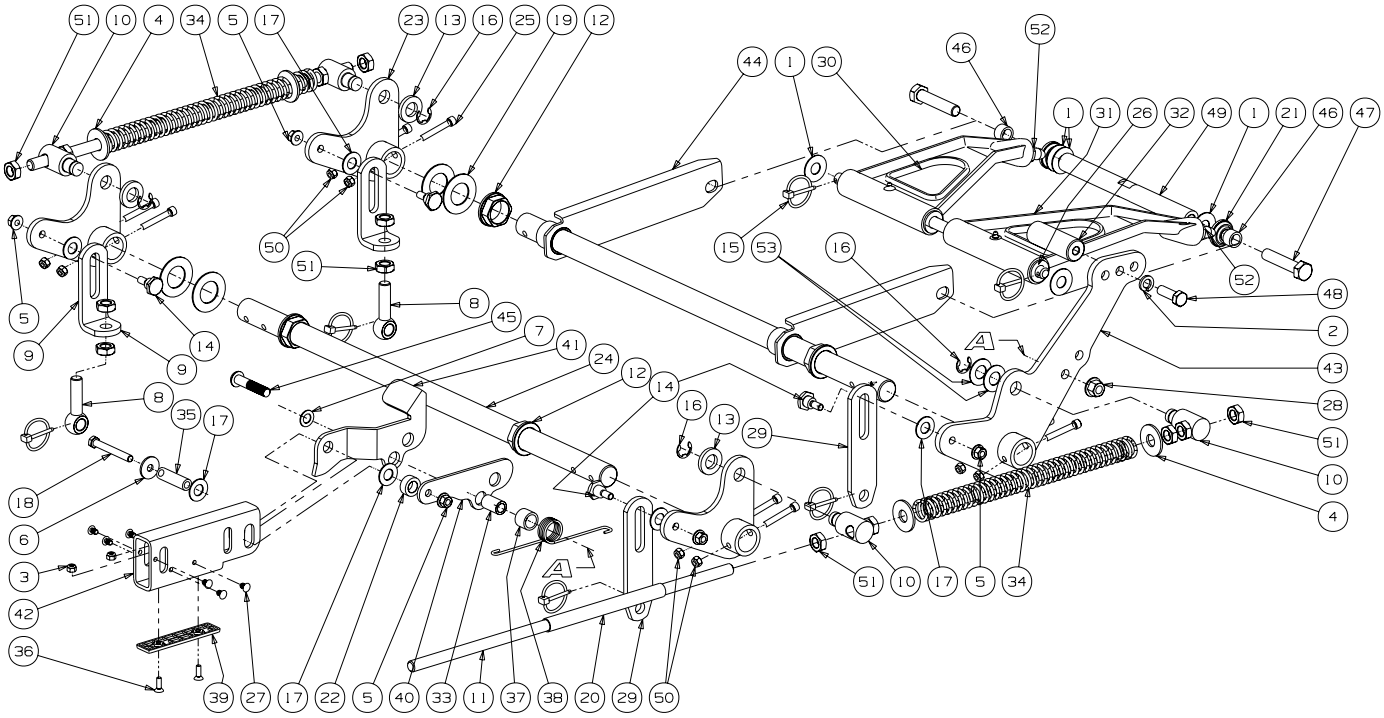

GD: 853-000063-11/11/08

Lift Assembly - Parts List for Figure 14

Ref. No.	Part No.	Description	Qty.
1	00002766	Washer, 1.5 x .655 x .055	5
2	00010734	Lock Washer, 1/2	1
3	00012152	Lock Nut w/Nylon Insert	2
4	00013432	Flat Washer, 5/8	4
5	00022560	Hex Nut, Flange Lock, 3/8-16	5
6	01000872	Flat Washer, 1.25 x .411 x .100	1
7	01000873	Flat Washer, .536 ID x .930 OD x .05	1
8	01001744	Eye Bolt, 5/8ID	2
9	01001746	Eye Bolt Mount Link, 5/8 ID	2
10	01001855	Ferule Lift	4
11	01001857	Lift Connector Rod	2
12	01001930	Hex Flange Bearing, 1.25 ID	4
13	01003123	Spacer, .812 ID x .268 Lg.	3
14	01003535	Shoulder Screw, 0.625 OD x .437 Lg.	4
15	01003993	Linch Pin, 3/16 Dia.	6
16	01003994	E Clip, 3/4 Dia.	4
17	01004003	Nylon Flat Washer, 5/8	6
18	01004127	HHCS, 3/8-16, 3.00	1
19	01006408	Flat Washer, 1.25 ID	4
20	01006823	Hose, 5/8 ID 13/16 OD, 8" LG	2
21	01007487	Rod End, Male	2
22	01007527	Spacer, .630 ID x 1.06 OD x .440	1
23	01007680	Bellecrank Weldment Assembly	3
24	01007681	Deck Lift Shaft	2
25	01007962	Socket Head CapScrew, 5/16-18 x 2	8
26	01008453	Lift Link Rod	1
27	01008801	Rivet, 1/4 x 5/8	6
28	01010119	Nut, 1/2-13, FlangeLock	1
29	02000561	Deck Link	2
30	02002708	Bearing Lift Brace Assembly, Left Hand includes:	1
	00060078	Grease Fitting	1
	02002384	Bearing	2
31	02002709	Bearing Lift Brace Assembly, Right Hand includes:	1
	00060078	Grease Fitting	1
	02002384	Bearing	2
32	02002596	Deck Lift Foot Pedal	1
33	02002655	Spacer, .51 ID x .75 OD x 1.240	1
34	01003318	Lift Compression Spring	2
35	02003043	Spacer, .375 ID x .625 OD x 2.20	1
36	02003505	Flat Head Cap Screw, 1/4-20 x .75	2
37	02003586	Spacer, .76 ID x 1.0 OD x .75	1
38	02003588	Torsion Spring, .120 Wire x 1.32 OD	1
39	02003749	Lift Wear Plate	1
40	02005048	Yoke Plate	1
41	02005050	Lift Link Bracket	1
42	02005103	Lift Tube, 3.0 x 1.5	1
43	02005137	Deck Lift Foot Pedal Weldment	1
44	02005223	Front Frame Strut Assembly	2
45	02005518	Socket Head Cap Screw, 1/2-13 x 2.50	1
46	02005535	Spacer, .632 x .877 x .548	2
47	710-04813	HHCS, 5/8-11 x 3.00	2
48	710-3181	Hex Cap Screw, 1/2-13 x 1.50	1
49	711-05072	Front Lift Link Shaft, Threaded	1
50	712-0429	Nut, 5/16-18, Nylock	8
51	712-3015	Jam Nut, 5/8-11	14
52	712-3056	Jam Nut, 5/8-18	2
53	736-0188	Washer, .76 x 1.49 x .06	2

23HP Electrical Assembly Kawasaki - Figure 15 and Parts List

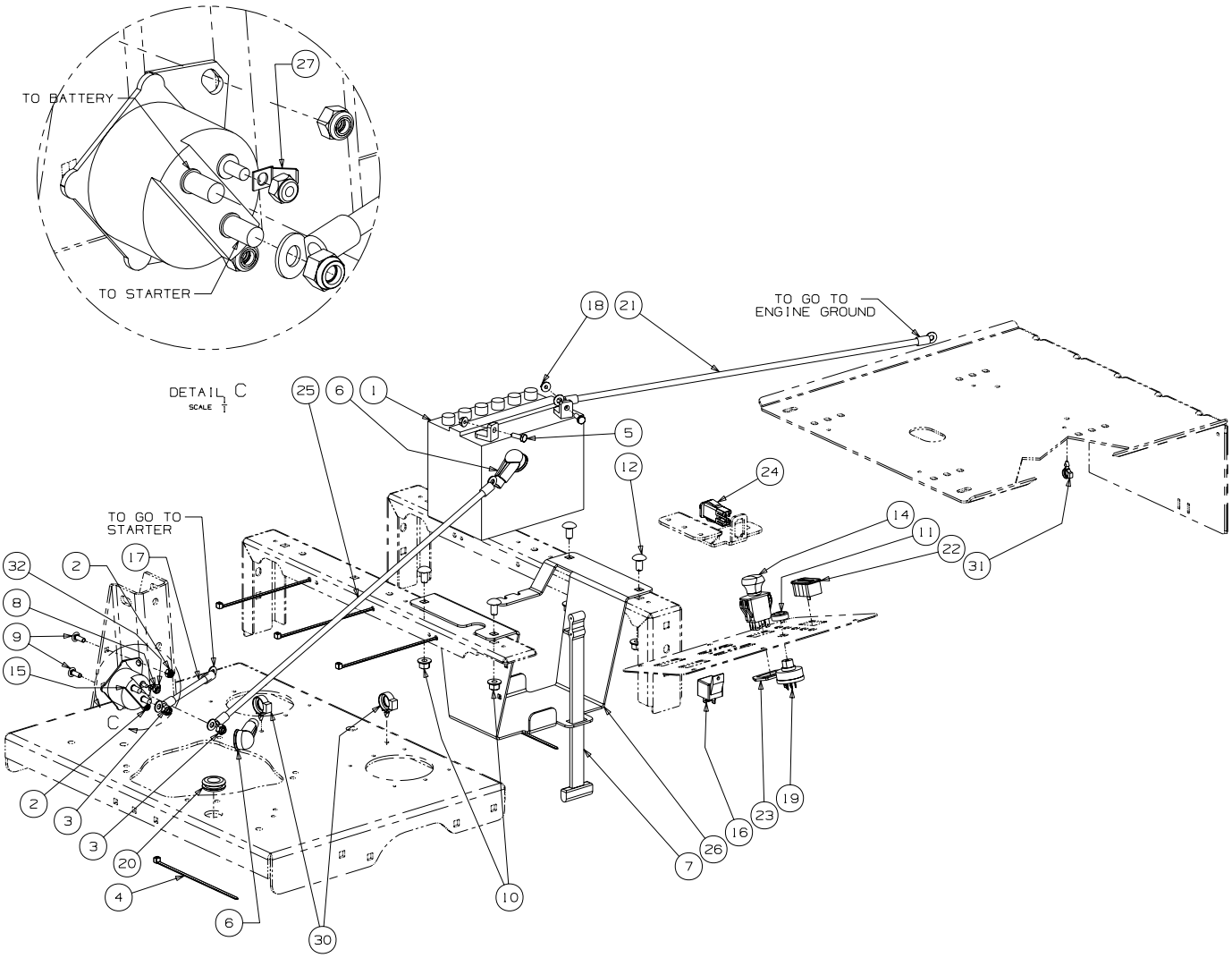

Fasten relay (01002251) with self-tapping screw (01000628) on LH control panel shown in Fig. 5.

GD: 02002560-11/20/08

Ref. No.	Part No.	Description	Qty.	Ref. No.	Part No.	Description	Qty.
1	00012032	Battery, 12V 225CCA 30 Min	1	17	01002253	Cable, Battery Red, 5"	1
2	00012152	Lock Nut w/Nylon Insert	2	18	01002766	Hex Flange Lock Nut, 1/4-20	2
3	712-0429	Nylock Nut, 5/16-18	2	19	01003581	Switch, Ignition, 6 Pin includes:	1
4	00012470	Tie, Cable, 3/16 x .05 x 7.4"	5		725-1341B	Key	1
5	710-3015	Screw, Hex, Cap, 1/4-20 x .75	2	20	01004040	Grommet, .75 ID	1
6	00013258	Boot, 1" OD Rubber Battery-PST, Red	2	21	01009623	Cable, Battery Black, 34"	1
7	723-3064	Strap, Battery	1	22	725-04893	Meter, Hour	1
8	00014608	Nut, Lock, Nylon Insert, #10-32	1	23	01009905	Bracket, PTO Switch Retainer	1
9	00017584	Carriage Bolt, 1/4-20 x .750	2	24	02000024	Switch, Safety N.O./N.C.	1
10	00022560	Hex Nut, Flange Lock, 3/8-16	4	25	02002059	Cable, Battery Red, 42"	1
11	00032097	Nut, W/Cap, 5/8-32 Ignition	1	26	02002552	Battery Bracket	1
12	01000372	Carriage Bolt, 3/8-16 x .75 Long	4	27	02003533	Terminal Tab, 1/4" Blade	1
13	01001811	Hourmeter, Harness (not shown)	1	28	02002822	Wire Harness Adaptor	1
14	01002111	Switch, Electric, PTO	1	29	02002824	Harness Assembly (not shown)	1
15	01002228	Solenoid Magnetic Switch	1	30	02003775	Electrical Conduit Clip, 5/8	2
16	01002251	Relay, 12V 40A	1	31	02003038	Electrical Conduit Clip, 3/8	1

25HP Electrical Assembly Kohler - Figure 16 and Parts List

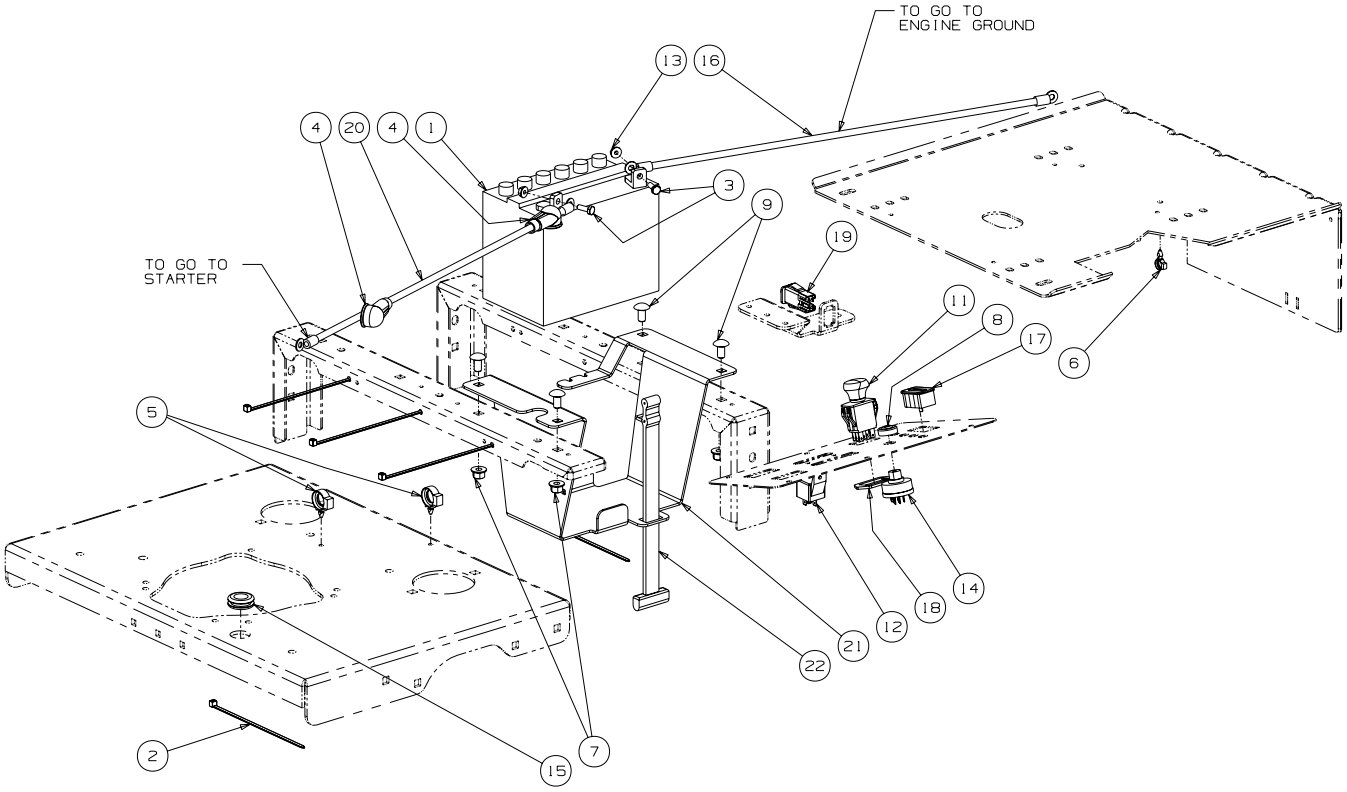

Fasten relay (01002251) with self-tapping screw (01000628) on LH control panel shown in Fig. 5.

GD: 02002838-10/02/08

Ref. No.	Part No.	Description	Qty.	Ref. No.	Part No.	Description	Qty.
1	00012032	Battery, 12V 225CCA 30 Min	1	13	01002766	Lock Nut, 1/4-20	2
2	00012470	Tie, Cable, 3/16 x .05 x 7.4"	5	14	01003581	Switch, Ignition, 6 Pin includes:	1
3	710-3015	Screw, Hex, Cap, 1/4-20 x .75	2		725-1341B	Key	1
4	00013258	Boot, 1" OD Rubber Battery-PST, Red	2	15	01004040	Grommet, .75 ID	1
5	02003775	Electrical Conduit Clip, 5/8	2	16	01009623	Cable, Battery Red, 34"	1
6	02003038	Electrical Conduit Clip, 3/8	1	17	725-04893	Meter, Hour	1
7	00022560	Flange Lock, Hex Nut, 3/8-16	4	18	01009905	Bracket, PTO Switch Retainer	1
8	00032097	Nut, W/Cap, 5/8-32 Ignition	1	19	02000024	Switch, Safety N.O./N.C.	1
9	01000372	Carriage Bolt, 3/8-16 x .75 Long	4	20	02002059	Cable, Battery, Red, 42"	1
10	01001811	Hourmeter, Harness (not shown)	1	21	02002551	Battery Bracket	1
11	01002111	Switch, Electric, PTO	1	22	723-3064	Strap, Battery	1
12	01002251	Relay, 12V 40A	1	23	02002824	Harness Assembly (not shown)	1

Decal Map

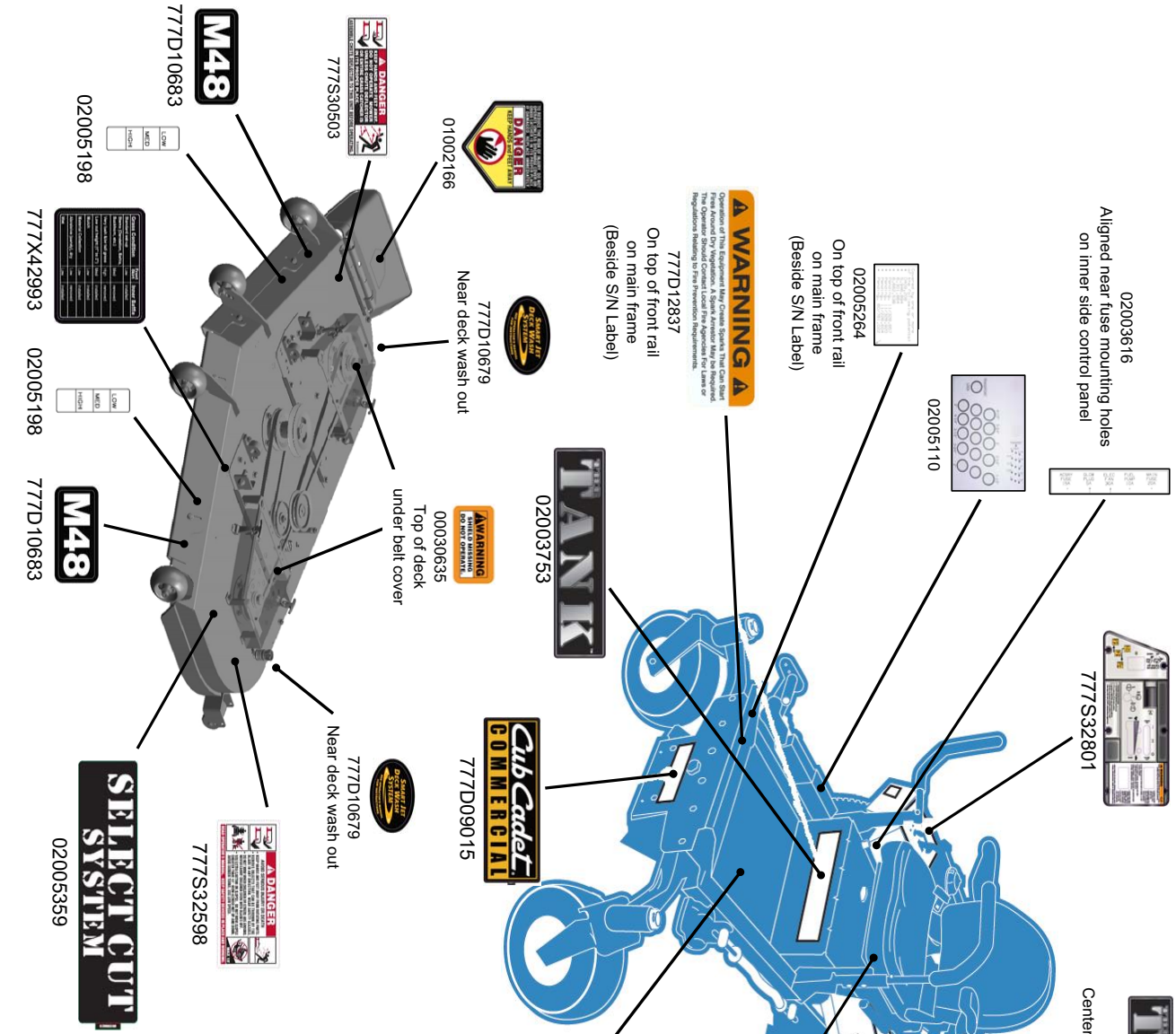
02003616
Aligned near fuse mounting holes on inner side control panel
02005110
02005264
On top of front rail on main frame (Beside S/N Label)
777D12837
On top of front rail on main frame (Beside S/N Label)
02003753
777S32801
02003753
Centered on rear bumper
02002693
Centered top of Tow Hitch
777S32797
777D09752
Both sides of unit
02002041
On top of Hydraulic Tank
02003676
On bottom of Foot Platform
777D09015
777S30503
01002166
777D10683
02005198
777X42993
02005198
777D10683
777D10679
Near deck wash out
00030635
Top of deck under belt cover
777D10679
Near deck wash out
777S32598
02005359

This Page Intentionally Left Blank-

This Page Intentionally Left Blank-

This Page Intentionally Left Blank

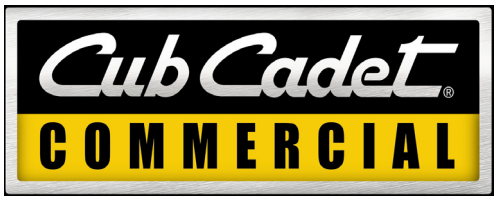

Cub Cadet Commercial
P.O. Box 368023
Cleveland, OH 44136

Form No. 02004715 Rev. 09-4 12/16/2008