Cub Cadet COMMERCIAL

Hydrostatic Zero-Turn Commercial Riding Mower

Professional Turf Equipment

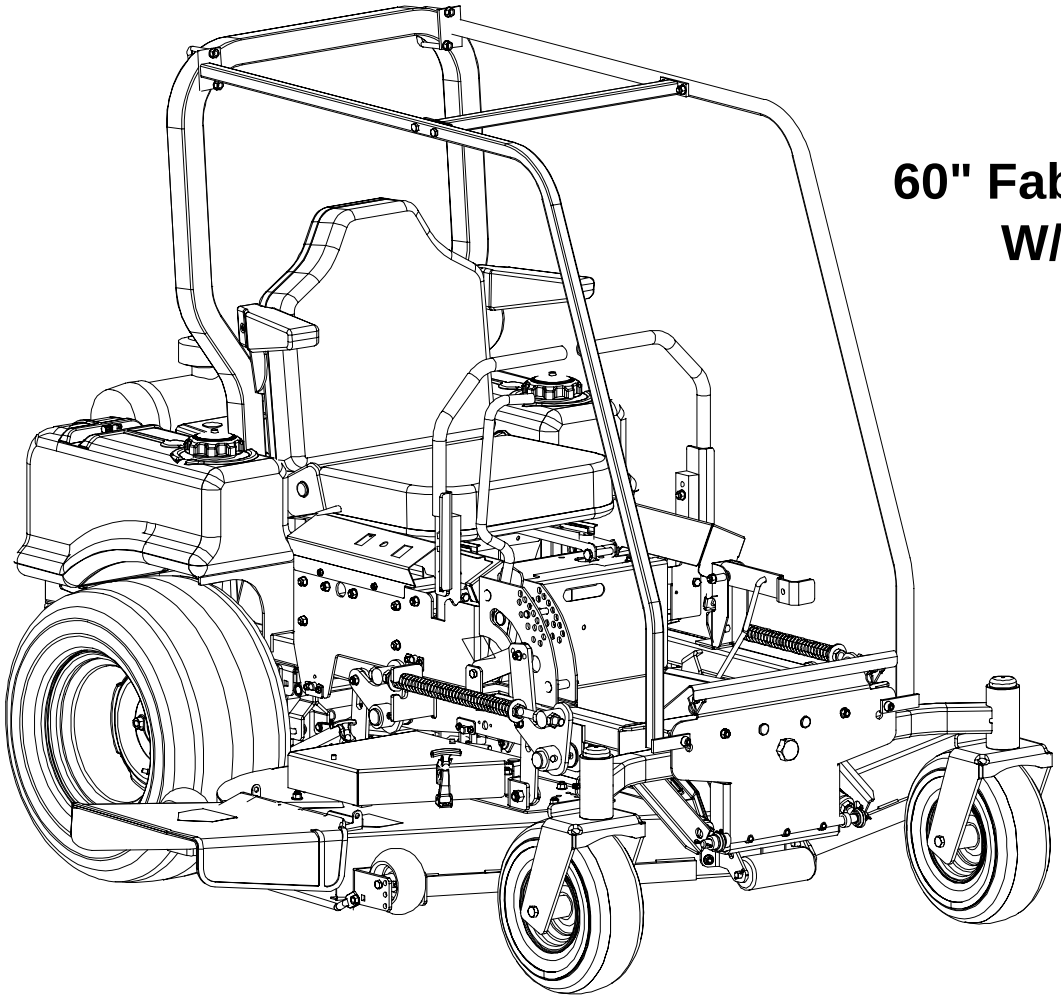

60" Fabricated Deck W/ R.O.P.S.

ILLUSTRATED PARTS LIST

TABLE OF CONTENTS

Frame Assembly 3
60" Fabricated Cutter Deck. . . . . 4 and 5
60" Spindle Assembly. . . . . 6 and 7
Hydro Tank and Hose Assembly. 8
Brake Motor Mount and Hub. 9
Brake Assembly . . . . . 10 and 11
Fuel Tank Assembly 12
Rear Bumper 13
Front Caster Assembly 14
60" Wheel Assembly. 15
Control Assembly . . . . . 16 and 17
Hydro Pump Assembly 18
Seat Assembly 19
27 HP Kohler Engine Assembly . . . . . 20 and 21
25 HP Kawasaki Engine Assembly. . . . . 22 and 23
Electrical Assembly Kohler . . . . . 24 and 25
25 HP Electrical Assembly Kawasaki . . . . . 26 and 27
Lift Assembly . . . . . 28 and 29
Foot Pedal Assembly 30
Floor Panel Assembly. 31

MODELS LISTED IN THIS MANUAL

25HP Tank, 53AH5D8X750

27HP Tank, 53AH5BDX750

Frame Assembly- Figure 1 and Parts List

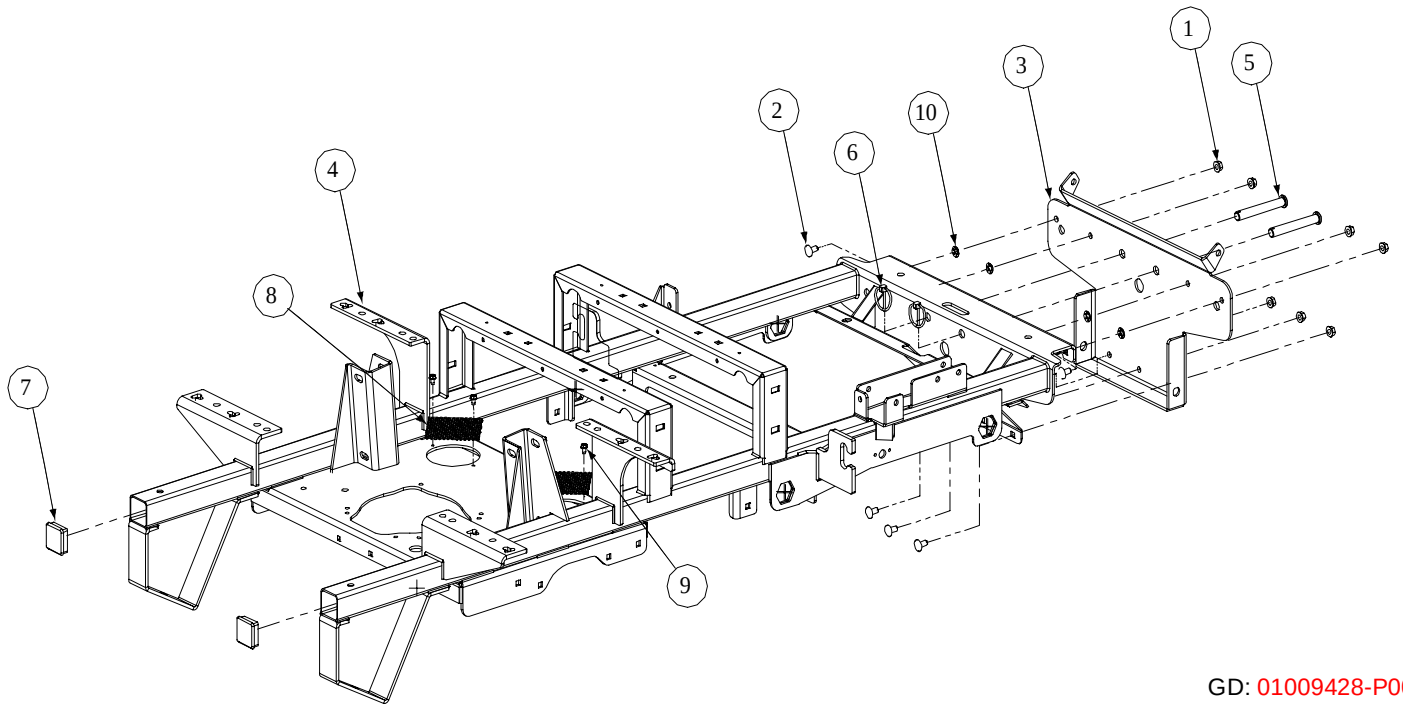

GD: 01009428-P00

Ref. No.	Part No.	Description	Qty.
1	00022560	Hex Nut, 3/8-16 Flange Lock	7
2	01000372	Carriage Bolt, 3/8-16 x .75 Long	7
3	01001713	Bracket Assembly, Frame, Front	1
4	01009427	Frame Assembly	1
5	01003282	Clevis Pin, .625 Dia x 4.375 Long	2
6	01003993	Linch Pin, 3/16 Dia.	2
7	01005160	Plug, Square Tube	2
8	01005680	Cover, Hydro Fan	2
9	01000628	Screw, TT, 1/4-20, 0.5	4
10	01008225	Push Retainer, 3/8	4

60" Fabricated Cutter Deck - Figure 6

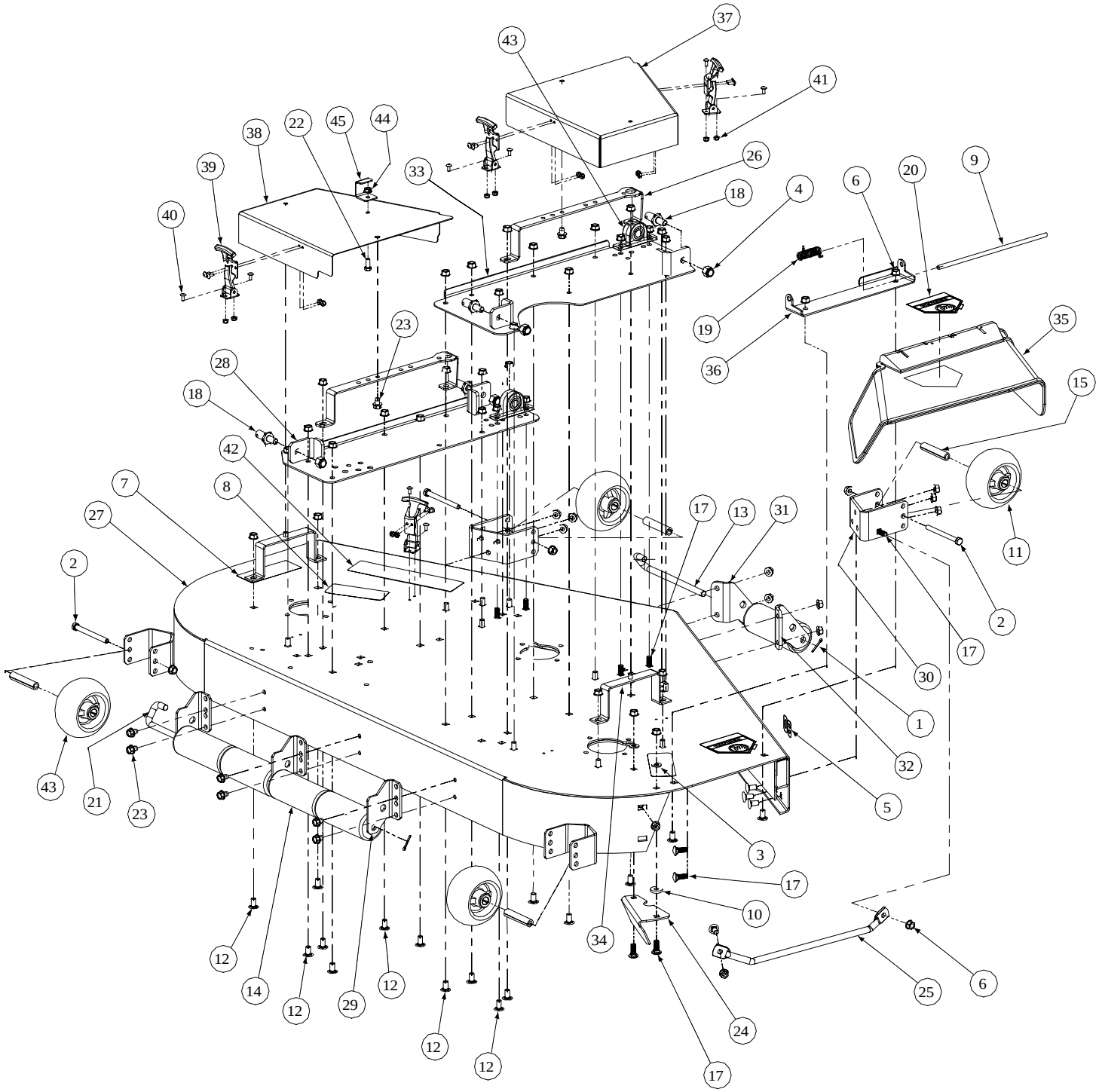

GD: 01008836-P02

60" Fabricated Cutter Deck - Parts List for Figure 6

Ref. No.	Part No.	Description	Qty.
1	00003107	Cotter Pin, .125 Dia. x 1.0	2
2	00011925	Hex Cap Screw, 3/8-16, 3.75	4
3	00012158	Flat Washer, 3/8	2
4	00012428	Lock Nut, Nylon Insert, 1/2-13	4
5	01002130	Label, 60"	2
6	00022560	Flange Lock Hex Nut, 3/8-16	50
7	00030633	Decal, Rotating Blade	1
8	00030635	Decal, Warning Shield Missing	2
9	01003254	Chute Deflector Rod	1
10	00083192	Idler Washer	1
11	01000343	Complete Wheel, 5.00 Dia.	4
12	01000372	Carriage Bolt, 3/8-16 x .75 Lg.	35
13	01000375	Roller Pin, 1/2 Dia. x 7.31 Lg.	1
14	01000385	Front Roller	5
15	01000398	Wheel Spacer	4
16	--	--	--
17	01000643	Carriage Bolt, 3/8-16 x 1	11
18	01001745	Pin, 5/8 Dia. x 1.2 Lg.	4
19	01003253	Torsion Spring, 0.4ID x 2.16Lg	1
20	01002166	Decal, Danger Hand and Feet	2
21	01002635	Roller Pin	1
22	00013406	Hex Cap Screw, 5/16-18 x .75	1
23	01004304	Hex Index Washer Screw, 3/8-16, .5	8
24	01009300	Chute Bracket	1
25	01008644	Finger Guard	1
26	01004685	Belt Cover Support	2
27	01008814	60 Deck Assembly	1
28	01008633	Left Hand Mount Deck Bracket Assembly	1
29	01005364	Deck Roller Mount Bracket	3
30	01005260	Anti-Scalp Wheel Front Mount Bracket	2
31	01005256	Left Hand Front Roller Mount Bracket	1
32	01005258	Right Hand Front Roller Mount Bracket	1
33	01008635	Right Hand Deck Bracket Assembly	1
34	01005437	Outer Belt Cover Support Assembly	2
35	01006693	Chute Deflector	1
36	01008226	Chute Deflector Bracket	1
37	01007169	Right Hand Deck Belt Cover Weldment	1
38	01007168	Left Hand Deck Belt Cover Weldment	1
39	01005869	T-Handle Latch Draw	4
40	00017778	Phillips Head Screw, 10-32	16
41	00014608	Lock Nut, Nylon Insert, 10-32	16
42	01006086	Commercial Mower Label	1
43	01009700	Pillow Block	2
44	01000635	Nut, 5/16-18, Hex Flange Lock	1
45	01004109	Stop Bracket	1

60" Fabricated Deck Spindle Assembly - Figure 7

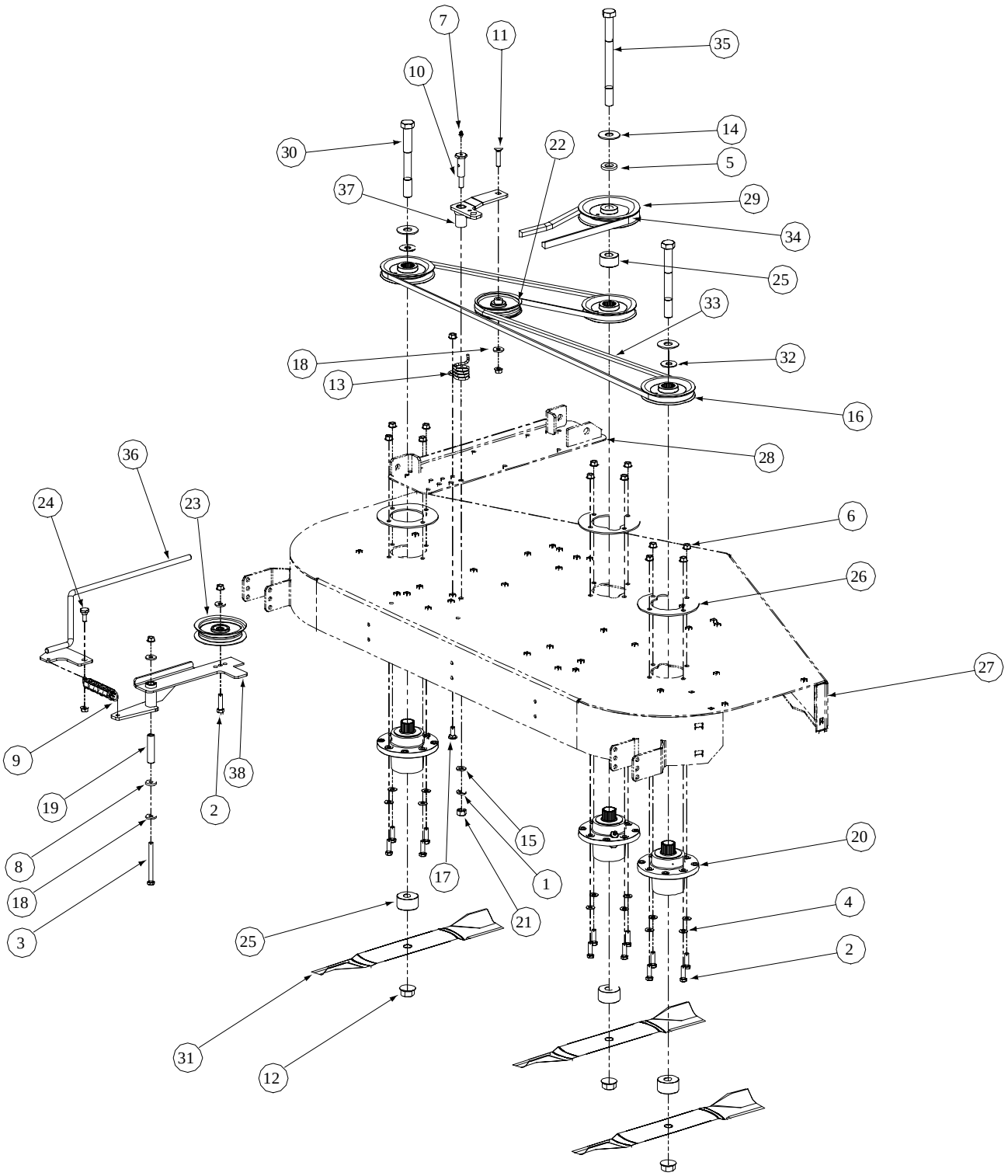

GD: 01005433-P03

60" Fabricated Deck Spindle Assembly - Parts List for Figure 7

Ref. No.	Part No.	Description	Qty.
1	01000389	Lock Washer, 7/16	1
2	00011438	Hex Cap Screw, 3/8-16 x 1-1/2	13
3	00011925	Hex Cap Screw, 3/8-16, 4.00	1
4	00012158	Flat Washer, 3/8	12
5	00021925	Caster Spacer	1
6	00022560	Flange Lock Hex Nut, 3/8-16	17
7	00060078	Grease Fitting, 1/4-28 x 3/16	1
8	00083192	Idler Washer	1
9	01000199	Extension Spring, 1.0 x OD x 5.125	1
10	01000302	Shoulder Screw, 7/16-14	1
11	01000364	Hex Carriage Screw, 3/8-16, 1.75	1
12	01000380	Flange Hex Nut, 3/4-16	3
13	01000387	Torsion Idler Spring	1
14	01000392	Flat Washer, .781 ID 2.00 OD, .105	3
15	01000393	Flat Washer, .469 ID, .875 OD, .105	1
16	01005616	V-Pulley, 5.00 OD	3
17	01000643	Carriage Bolt, 3/8-16 x 1	1
18	01000723	Flat Washer, .406 ID, 1.0 OD, .105	4
19	01003245	Spacer, .39 ID x .625 OD x 2.75	1
20	01003532	Aluminum Spindle Assembly	3
21	00005763	Hex Nut, 7/16-14	1
22	01004081	Flat Pulley	1
23	01004101	Idler Pulley, 4.06 OD	1
24	01004118	Shoulder Screw, .50 x .27 Lg., 3/8-16	1
25	01004415	Spacer, .760 ID x 2.00 OD x 1.1	4
26	01005434	Aluminum Spindle Support Plate	3
27	01004691	60 Deck Assembly	1
28	01005342	Left Hand Mount Deck Bracket Assembly	1
29	01005203	V-Pulley, 5.774 OD	1
30	01005213	Hex Cap Screw, 3/4-16, 7.00	2
31	01005338	Hi-Lift Blade, 21.0, 0.756 ID	3
32	01003123	Spacer .812 ID x .268 LG	2
33	01005376	V-Belt, A Section x 122.3	1
34	01005377	V-Belt, B Section x 91.2	1
35	01005388	Hex Cap Screw, 3/4-16, 9.00	1
36	01005690	Spring Tension Rod Assembly	1
37	01005737	Idler Arm Assembly, Deck Spindle	1
	01000308	Bearing Sleeve	2
38	01006181	Idler Arm Assembly, Flat Top Bearing	1
	01000308	Bearing Sleeve	2

Hydro Tank and Hose Assembly - Figure 8 and Parts List

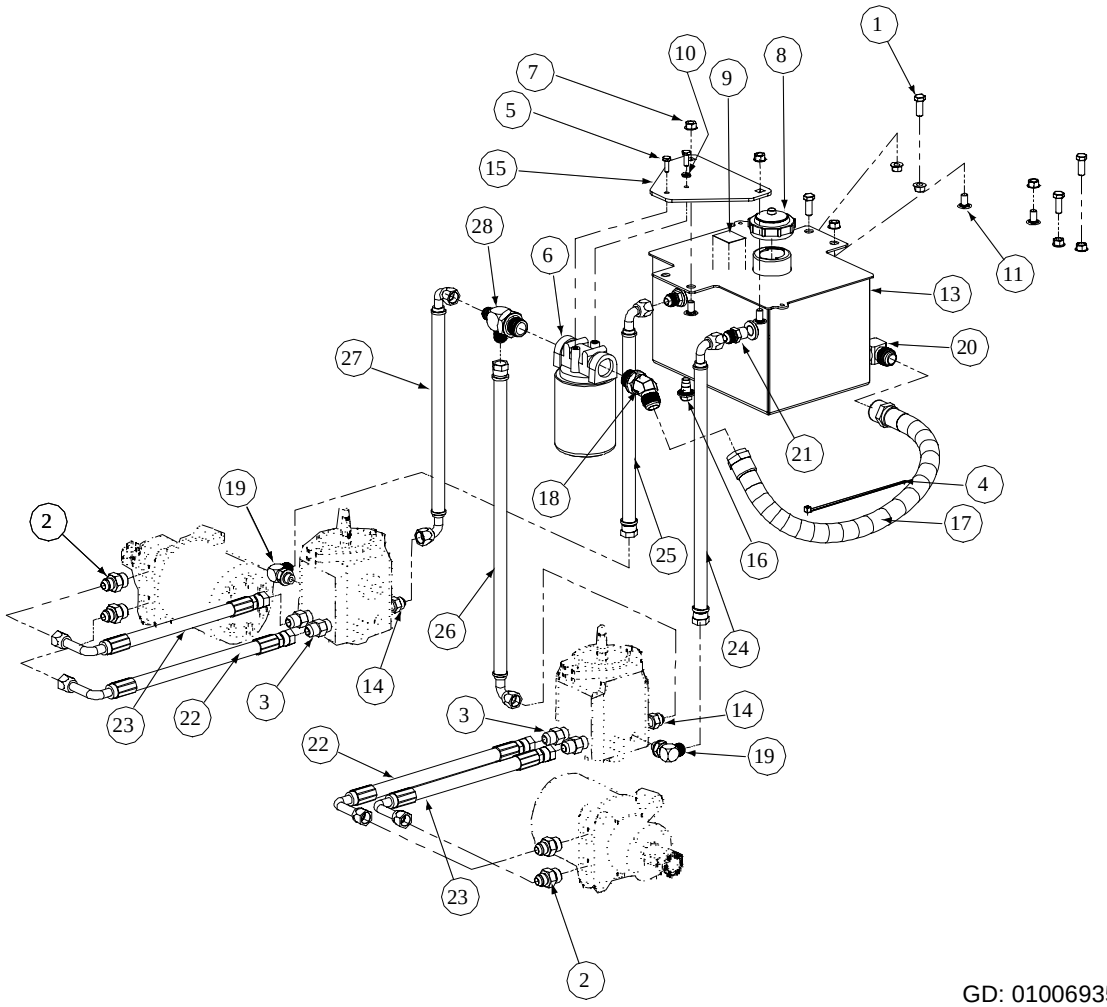

GD: 01006935-P02

Ref. No.	Part No.	Description	Qty.	Ref. No.	Part No.	Description	Qty.
1	00006144	Hex Cap Screw, 3/8-16, 1	4	15	01001650	Oil Filter Mounting Plate	1
2	00012288	Fitting 1/2 x 3/4 - O Ring	4	16	01004192	Oil Pan Drain w/ Seal and Plug	1
3	00012426	Fitting 1/2 x 3/4 - O Ring to Flare	4	17	01004268	Tank to Filter Hose Assembly	1
4	00012470	Cable Tie, 3/16 x .05 x 7.4	5	18	01004272	Connector, 3/4 x3/4	1
5	00013131	Hex Cap Screw, 1/4-20, .75	2	19	01004542	Elbow Fitting, 3/8 O-ring, 1/2 Flare	2
6	00017665	Filter Head 3/4 includes:	1	20	01004702	Fitting Elbow, 1/2 x 1/2	1
	01004166	Filter		21	01006353	Fitting, 3/8 NPT, 1/2 Flare	2
7	00022560	Hex Nut Flange Lock, 3/8-16	8	22	01006874	Long Pressure Hose Assembly	2
8	00030261	Cap, Hydro Oil Tank	1	23	01006893	Short Pressure Hose Assembly	2
9	00031994	Decal Oil Only 20W50	1	24	01006901	17.75" Return Hose Assembly, RH	1
10	00012132	Lock Washer, 1/4	1	25	01006902	14" Return Hose Assembly, LH	1
11	01000372	Carriage Bolt, 3/8-16 x .75 LG.	4	26	01006914	21.25" Supply Hose Assembly, RH	1
12	--	--	--	27	01006916	15.50" SupplyHose Assembly, LH	1
13	01004516	Hydraulic Tank Assembly	1	28	01006959	Tee Fitting, 3/4 x 1/2 x 1/2	1
14	01002606	Fitting Connector, 1/2 x 3/8	2				

NOTE: Lubricant, 737-3120 Gallons, 3.25

Brake Motor Mount and Hub- Figure 9 and Parts List

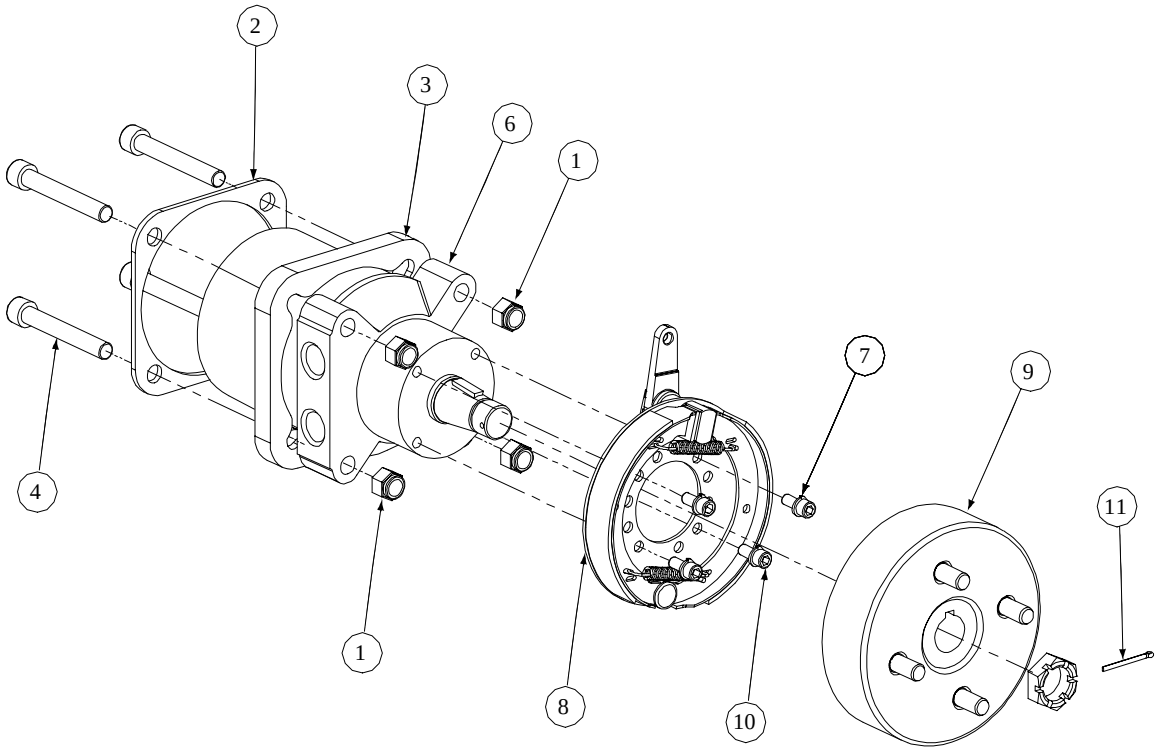

GD: 01008450-P01

Ref. No.	Part No.	Description	Qty.
1	00012428	Lock Nut, Nylon Insert, 1/2-13	8
2	01006949	Motor Plate	2
3	01009775	Motor Spacer	2
4	01007791	Socket Head Capscrew, 1/2-13; 3-1/2	8
--	01000226	Capscrew, 1/2-13 x 3.5	8
5	--	Hyd. Motor, Parker Left Hand Assembly w/ Brake & Drum (Not Shown)	1
--	01006730	Hyd. Motor, Parker Left Hand	1
6	--	Hyd. Motor, Parker Right Hand Assembly w/ Brake & Drum	1
--	01006953	Hyd. Motor, Parker Right Hand	1
7	00012168	Lock Washer, 5/16	8
8	01007048	Brake Assembly w/Line	2
9	01007049	Hub and Drum Assembly w/Studs	2
10	01007464	Capscrew w/Socket, 5/16-18 x 3/4	8
11	01007773	Cotter Pin 1/8 x 1-1/2	2

Brake Assembly - Figure 10

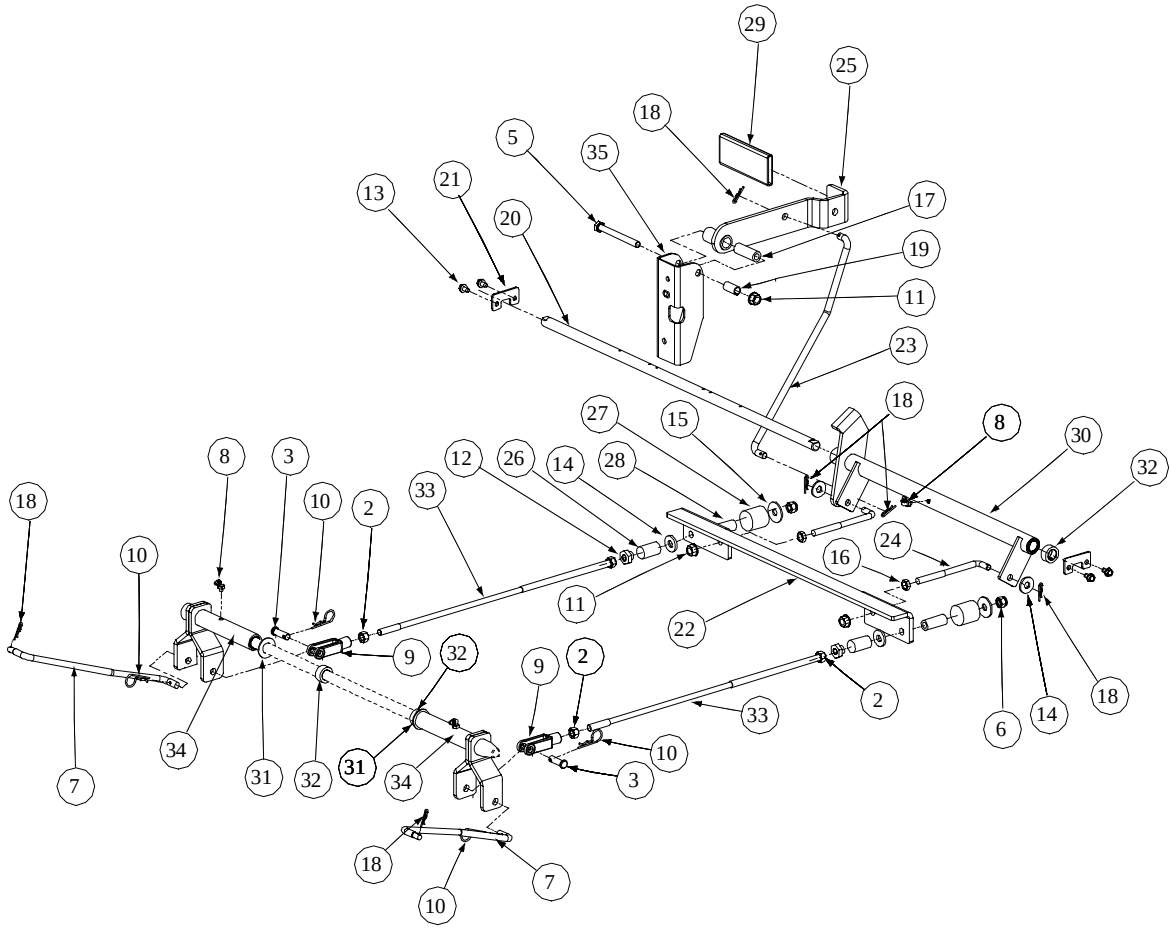

GD: 01006891-P07

Brake Assembly - Parts List for Figure 10

Ref. No.	Part No.	Description	Qty.
1	--	--	--
2	00006131	Hex Nut, 3/8-16	4
3	00009678	Clevis Pin, 3/8 x 1-1/8	2
4	--	--	--
5	00011888	Hex Cap Screw, 3/8-16 x 3-1/2	1
6	00012173	Nylock Nut, 3/8-16	2
7	01007771	Linkage Brake Rod	2
8	00012226	Grease Fitting, 1/4 -28, 90°	3
9	00021955	Yoke, 3/8-16	2
10	00021956	Hair Pin, 3/8" - 1/2"	4
11	00022560	Flange Lock Hex Nut, 3/8-16	3
12	01000100	Shoulder Nut	2
13	01000628	Screw, 1/4-20 x 1-1/2	4
14	01000723	Flat Washer, .406 ID x 1.0 OD x .105	4
15	01000872	Flat Washer, .411 x 1.25 x .100	2
16	01002511	Jam Nut, 3/8-16	2
17	01002751	Spacer, .375 x .50 x 1.75	1
18	01002771	Cotter Pin, .072 x 1.12 Lg	6
19	01002772	Spacer, .375 x .50 x 1.02 Lg	1
20	01008524	Bellecrank Mounting Shaft	1
21	01003591	Parking Brake Shaft Holder	2
22	01003593	Brake Bracket	1
23	01008886	Brake Rod	1
24	01003417	Connector Rod, 3/8 OD x 5.75	2
25	01003595	Brake Handle	1
26	01003574	Neutral Brake Spring	2
27	01003575	Force Brake Spring	2
28	01003576	Center Brake Hose	2
29	01003716	Parking Brake Grip	1
30	01003730	Brake Bearing Hub	1
31	01004003	Flat Washer, 5/8	2
32	01006350	Shaft Collar, .625 ID x 1" OD x .438	3
33	01006856	Connector Rod, 3/8 OD x 17.88 Lg	2
34	01007241	Rear Brake Arm Assembly	2
35	01008889	Parking Brake Mounting Bracket	1

Fuel Tank Assembly - Figure 11 and Parts List

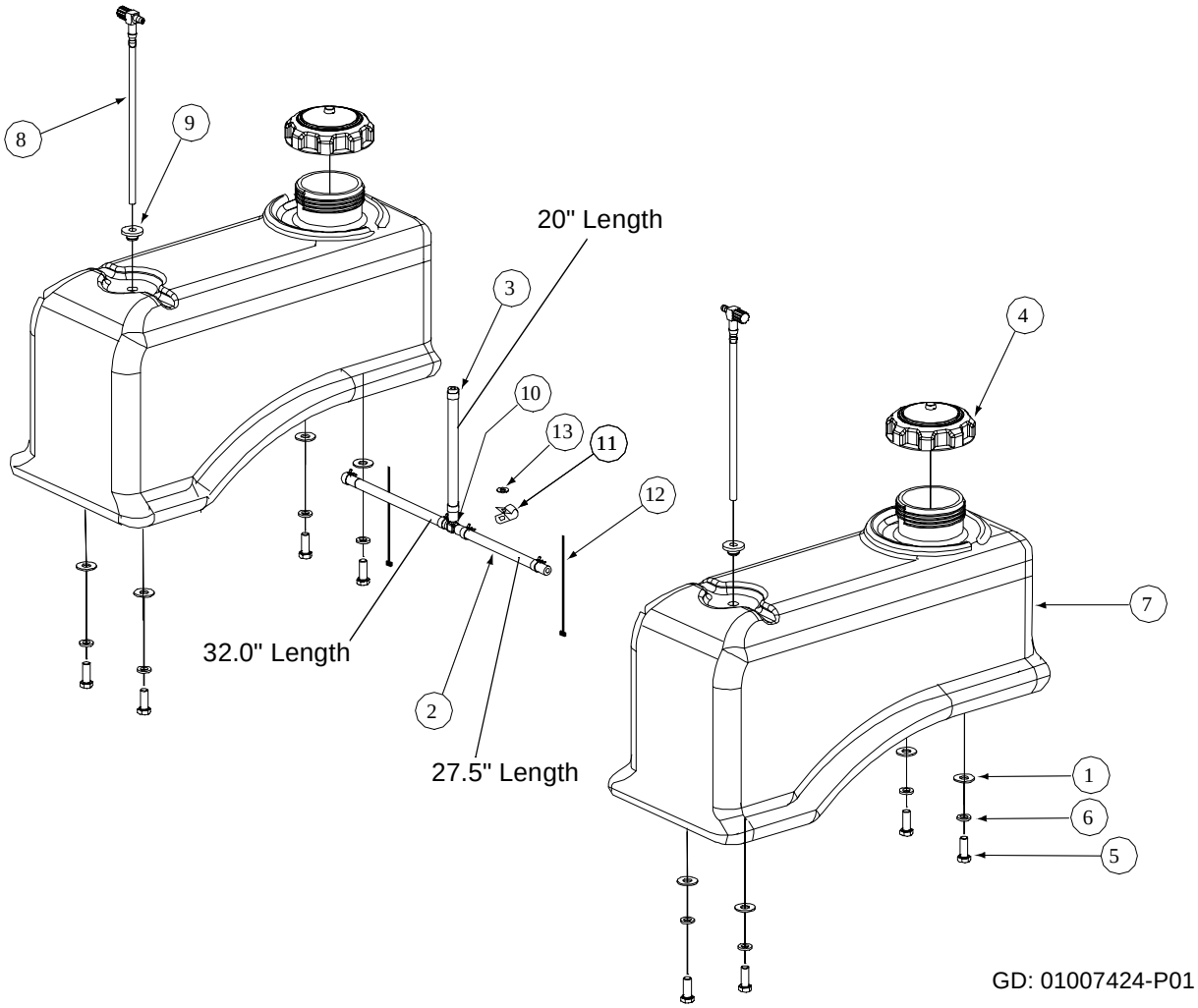

GD: 01007424-P01

Ref. No.	Part No.	Description	Qty.
1	01000723	Flat Washer, .406 ID, 1.0 OD, .105	8
2	--	Hose, 1/4" Fuel Line (in inches)	79.5
3	00012235	Clamp, Union	6
4	01000069	Fuel Cap, 3.5	2
5	01000368	Hex, Cap Screw, 3/8-16, .88	8
6	00012157	Lock Washer, 3/8	8
7	01007218	Fuel Tank	2
8	01007425	Fuel Fitting	2
9	01000281	Fuel Tank Grommet	2
10	01003473	Tee Fitting, Fuel	1
11	00031081	Clamp	1
12	00012470	Cable Tie	2
13	01000600	Flatwasher 1/4 x .630 x .0515	1

Rear Bumper - Figure 12 and Parts List

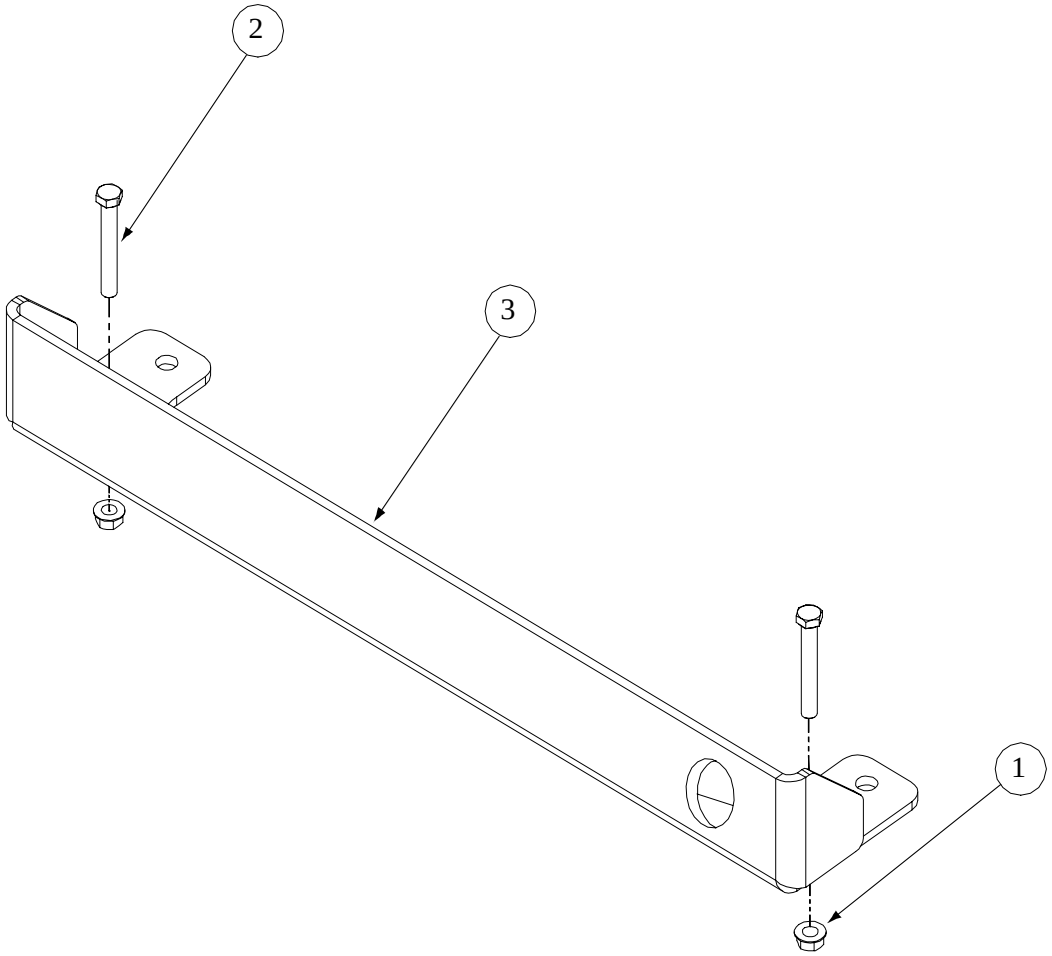

GD: 01009820-P00

Ref. No.	Part No.	Description	Qty.
1	00012428	Hex Nut, 1/2-13, Insert Lock	2
2	00030046	HHCS, 1/2-13, 3.00	2
3	01005067	Rear Bumper Plate	1

Front Caster Assembly - Figure 14 and Parts List

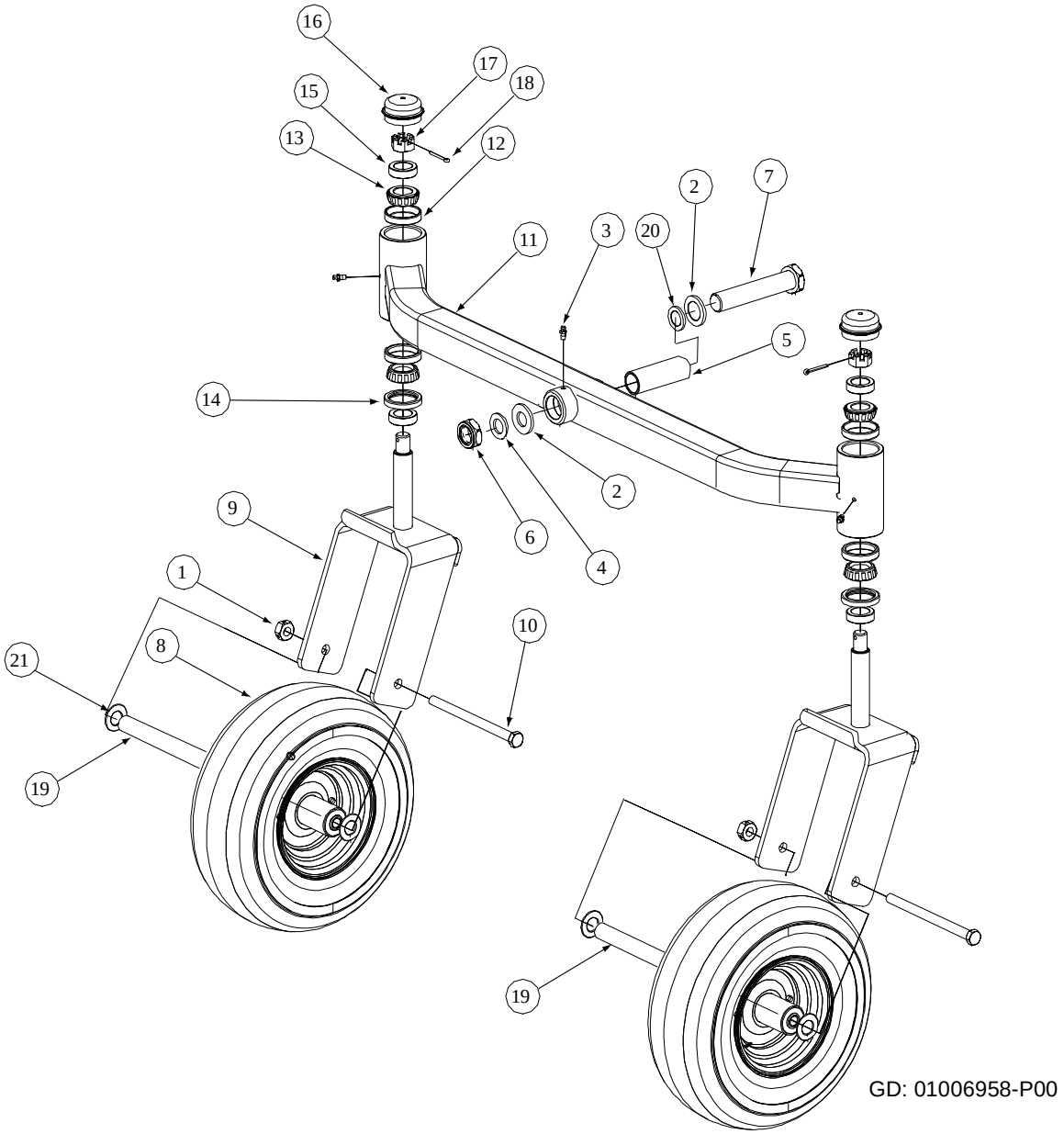

GD: 01006958-P00

Ref. No.	Part No.	Description	Qty.				
1	00023287	Nut, 1/2-20, Center Lock	2	11	01001628	Front Axle Assembly	1
2	01006294	Bell Washer, 1.25 ID	2	--	--	--	--
3	00060078	Grease Fitting	3	12	01002620	Cup Bearing	4
4	00023822	Special Washer	1	13	01002621	Bearing Cone	4
5	01006310	Spacer, 1.005 ID x 1.25 OD x 3.6	1	14	01002622	Seal	2
6	01000678	Nut, Jam, 1.0-14, Insert Lock	1	15	01002624	Ring Seal	4
7	01006309	Hex Cap Screw, 1-14 x 5.0	1	16	01006347	Grease Cap, 1.986 OD	2
8	01006913	Wheel, 13 x 6.50 x 6, White	2	17	01002626	Slotted Nut, 3/4-16	2
--	01007564	Tire	1	18	01002627	Cotter Pin, 5/32, 1.25	2
--	--	Retainer Flange	2	19	01006912	Wheel Spacer	2
--	--	Roller Bearing	2	20	01006408	Flat Washer, 1.25 ID	1
9	01007407	Yoke, Caster Wheel	2	21	01003123	Spacer, .812 ID x .218LG	4
10	01006961	HHCS, 1/2-20, 7.50	2				

60" Wheel Assembly - Figure 15 and Parts List

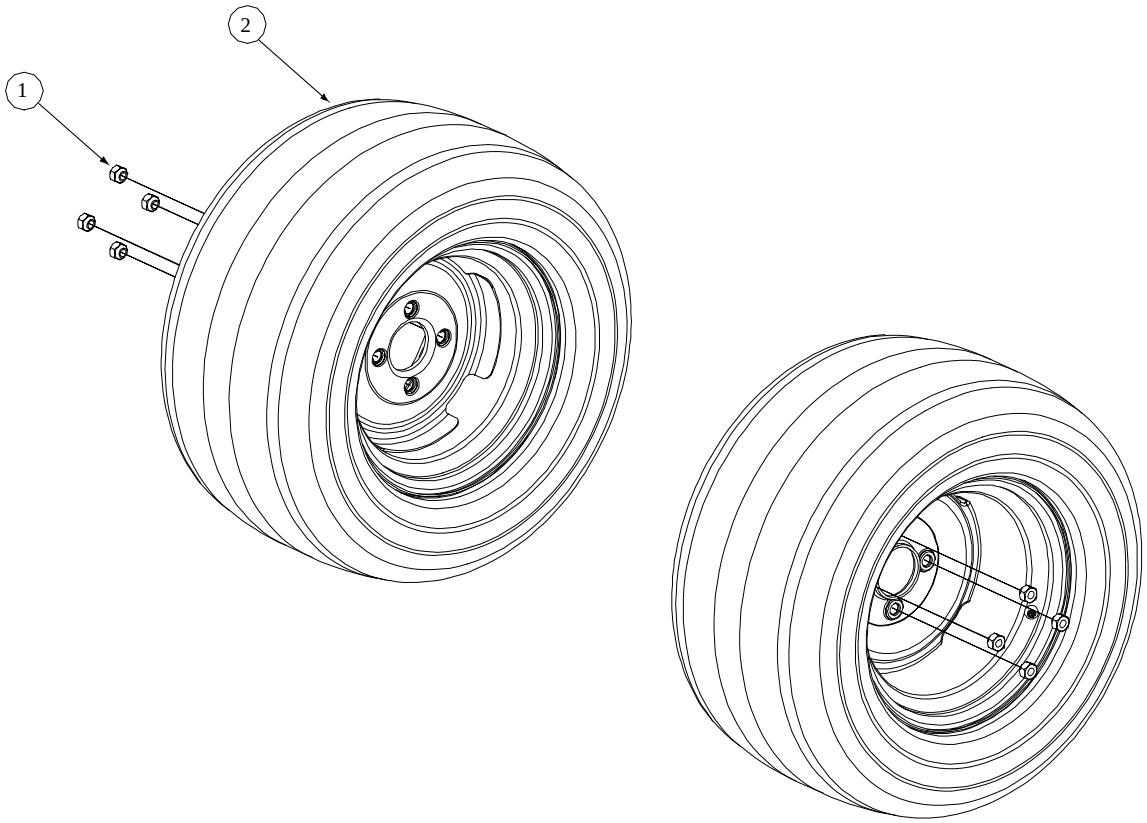

GD: 01002572-P03

Ref. No.	Part No.	Description	Qty.
1	00012187	Lug Nut, 1/2-20	8
2	01002182	Wheel Assembly, 24 x 12-8, Dr, White: Includes	2
	01004473	Tire, Turf Saver, 24 x 12.00-12, 2-Ply	
OPTIONAL TIRES			
	01006324	Turf Master, Rear Wheel Assembly	

Control Assembly- Figure 16

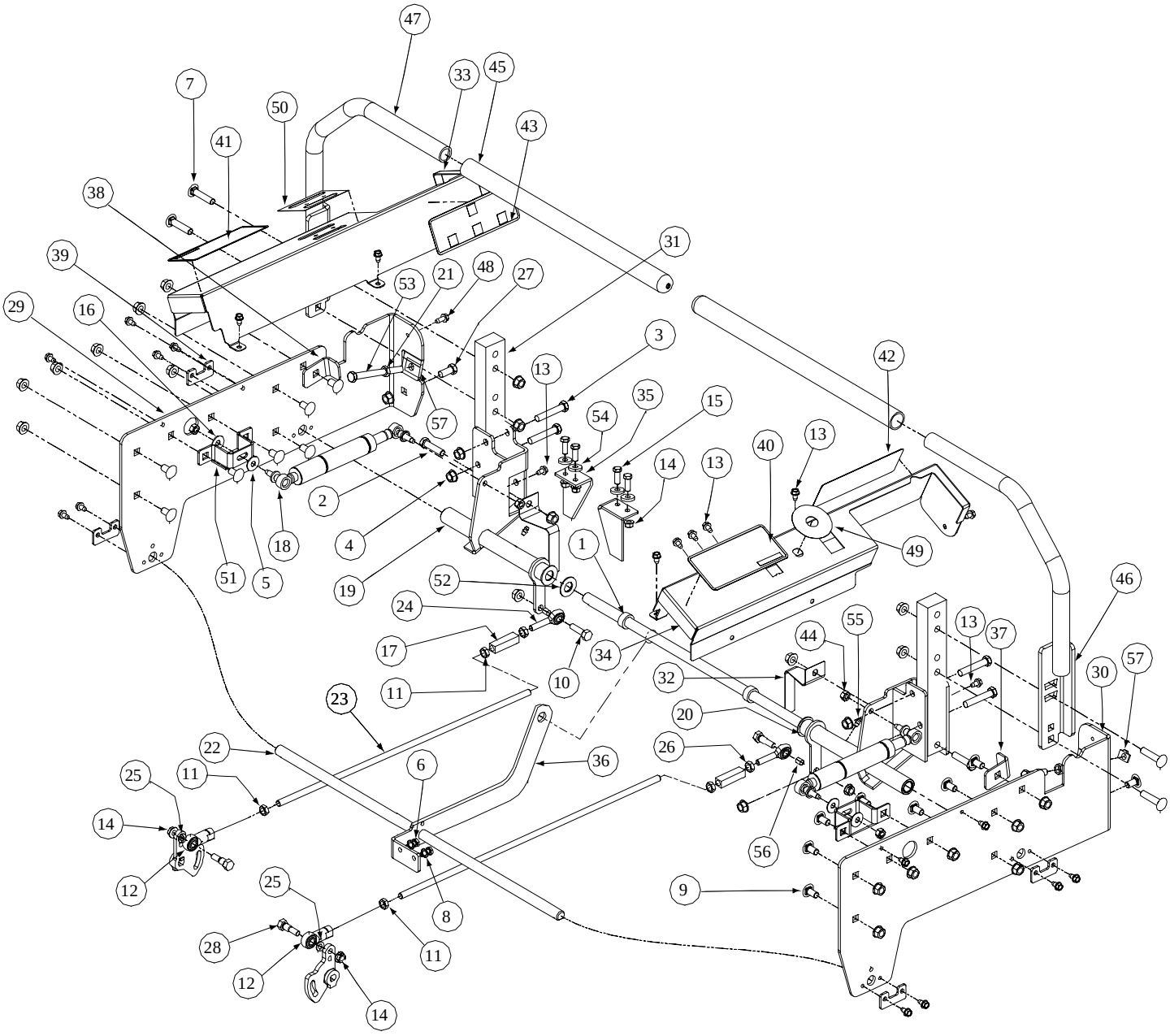

GD: 01007240-P09

Control Assembly - Parts List for Figure 16

Ref. No.	Part No.	Description	Qty.	Ref. No.	Part No.	Description	Qty.
1	01006350	Shaft Collar	2	29	01005769	Side Panel, Control, Left	1
2	00010980	HHCS, 3/8-16, 2.00	2	30	01005770	Side Panel, Control, Right	1
3	00011861	HHCS, 3/8-16, 2.25	4	31	01003009	Mounting Handle	2
4	00022560	Hex Nut, 3/8-16, Lock Flange	27	32	01003011	Lever, Safety Switch	2
5	01005851	External Washer, 3/8	2	33	01004889	Control Panel, LH	1
6	00013131	HHCS, 1/4-20, .750	2	34	01004890	Control Panel, RH	1
7	01000364	Hex Carriage Screw, 3/8-16, 1.75	4	35	01003587	Switch Mounting Bracket, Lapbar	2
8	00012132	Lock Washer, 1/4 Zinc	2	36	01001968	Link Mounting Control Shaft, Bracket	1
9	01000372	Carriage Bolt, 3/8-16 x .75	15	37	01003199	Stop, RH	1
10	00008495	Capscrew, 3/8-16 x 1-3/4	2	38	01003200	Stop, LH	1
11	01000450	Hex Jam Nut, 3/8-24	4	39	01003591	Holder Shaft, Park Brake	4
12	01000451	B/Joint, 3/8-24, Right Hand Female	2	40	01003449	Decal , Right Hand Console	1
13	01000628	Screw, TT, 1/4-20, 0.5, Hex Index Washer	22	41	01003450	Decal, Left Hand Console	1
14	01000635	Nut, Lock, HexFlange, 5/16-18	7	42	01003451	Decal Right Hand Control	1
15	00013406	Hex, Cap Screw, 5/16-18 x 3/4	4	43	01003452	Decal, Left Hand Control	1
16	01000960	Belle Washer, .325 x .930 x .045	2	44	01003561	Nut, Hex, Center Lock, M8	4
17	01007734	Turnbuckle	2	45	01003715	Grip, 1.0	2
18	01001727	Cylinder Return to Neutral	2	46	01001615	Lapbar, Weldment, Right Handle	1
19	01003044	Hub Assy, Control LH Bearing	1	47	01003729	Lapbar, Weldment, Left Handle	1
	01004265	Bearings	2	48	01000629	Screw, TT, 1/4-20, 0.75, Hex Index Washer	1
20	01003045	Hub Assy, Control RH Bearing	1	49	01003857	Label, Ingnition, 2.5 Diameter	1
	01004265	Bearings	2	50	01003858	Label, Control, Throttle and Choke	1
21	01002511	Nut, 3/8-16, Jam	2	51	01005784	Bracket Assembly, Mount Dampener	4
22	01008524	Shaft Control Brake Steering	2	52	01004003	Flat Washer, 5/8 Nylon	2
23	01008518	Rod Connector 3/8 OD x 14.25	2	53	01004127	HHCS, 3/8-16, 3.00	2
24	01008367	B/Joint, 3/8-24, Left Hand Female	2	54	00009812	Flat Washer, 5/16	4
25	00012168	5/16, Lock Washer	2	55	00012226	Grease Fitting, 90°	2
26	01002986	Nut, 3/8-24, Jam, LH Third	2	56	01007312	Spacer, .385ID x .625 OD x >50 Lg	2
27	00013092	HHCS, 5/16-18 x 1.0	1	57	01003947	U-Nut, 3/8-16, .75	2
28	01002988	Screw, Shoulder Control Rod	2				

Hydro Pump Assembly- Figure 17 and Parts List

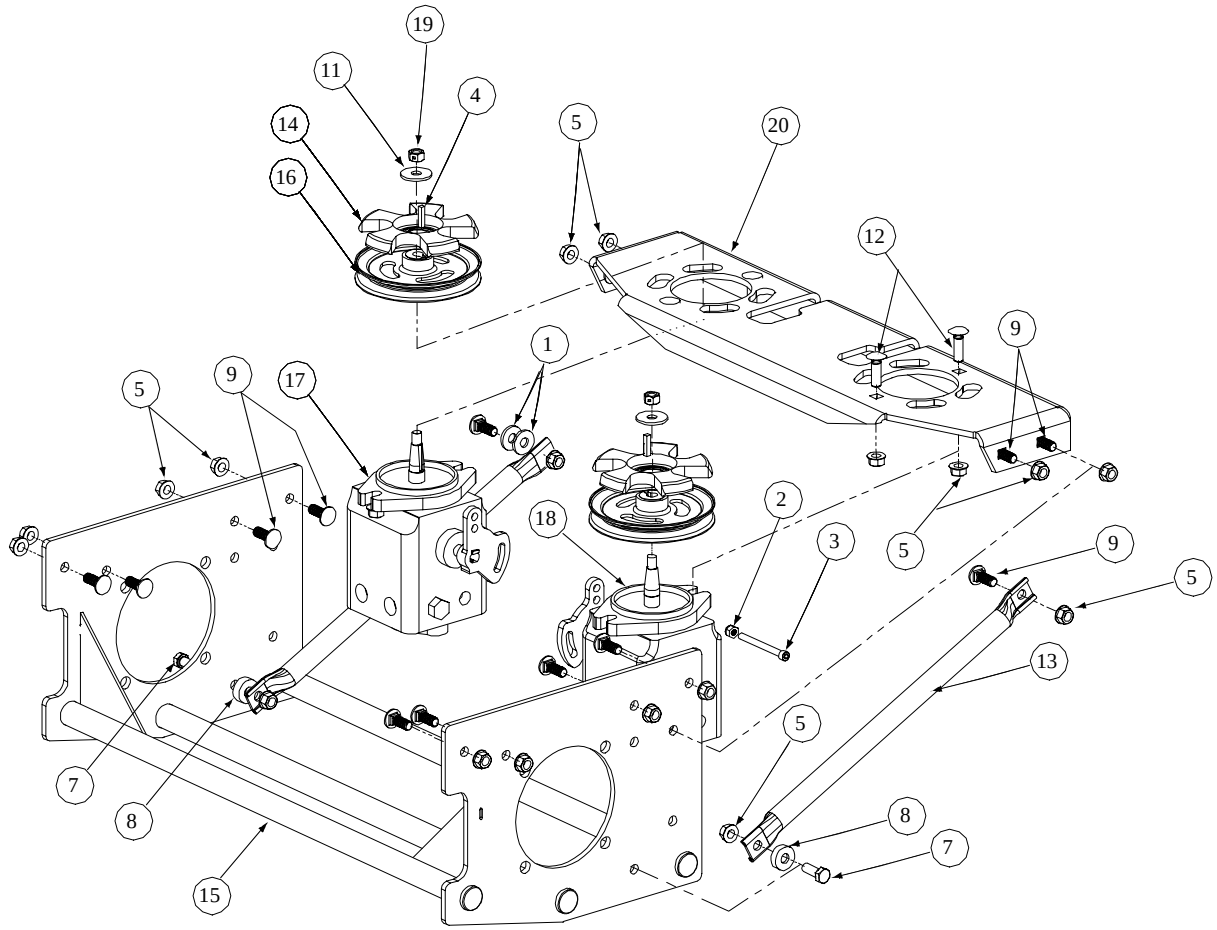

GD: 01006918-P03

Ref. No.	Part No.	Description	Qty.	Ref. No.	Part No.	Description	Qty.
1	00012157	Washer lock 3/8 zinc	2	11	01000872	Flat Washer, .411 x 1.25 x .100	2
2	00012152	Lock Nut, Nylon Insert, 1/4-20	2	12	01002010	Carriage Screw, 3/8-16 x 1.25	4
3	00019962	Socket Head Cap Screw, 1/4-20 x 2-1/2	2	13	01001618	Strut Frame	2
4	00020628	Key, 3/16" x 7/8"	2	14	01005339	Hydro Pulley Fan	2
5	00022560	Flange Lock Hex Nut, 3/8-16	20	15	01006728	Hydro Motor Frame Assembly	1
6	--	--	--	16	01006799	Hydro Pulley Pump	2
7	01000369	Hex Cap Screw, 2/8 -16 x 1.25	2	17	01006936	Hydro Pump, LH	1
8	01000397	Spacer, .406 ID x 1.00 OD x .38	2	18	01006937	Hydro Pump, RH	1
9	01000643	Carriage Bolt, 3/8-16 x 1	14	19	01007309	Hex Nut, 3/8-24	2
10	--	--	--	20	01006735	Hydro Pump Mounting Weldment	1

Seat Assembly- Figure 18 and Parts List

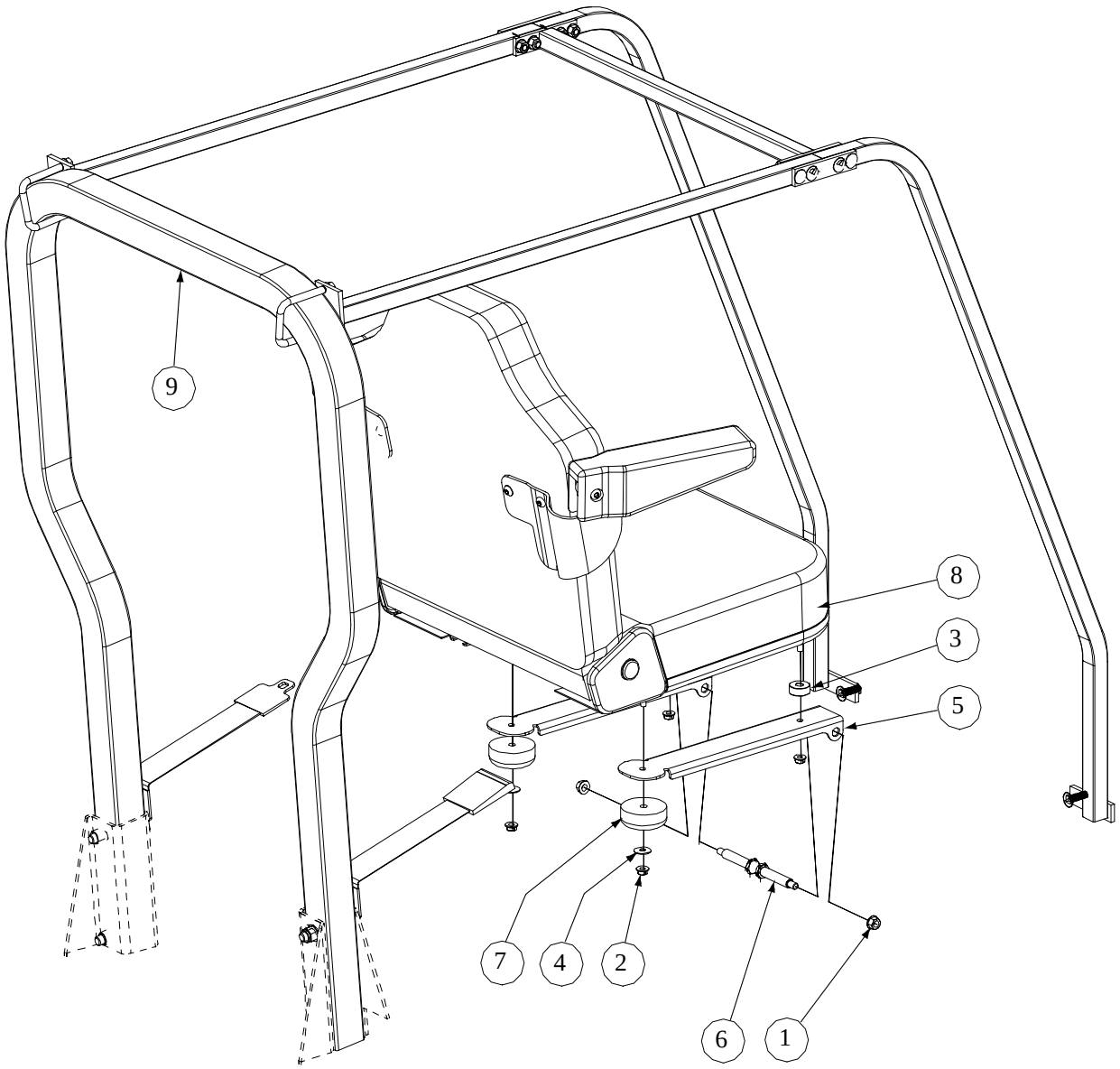

GD: 01009431-P01

Ref. No.	Part No.	Description	Qty.
1	00022560	Nut, Hex 3/8-16 Flange Lock	2
2	01000635	Lock Nut, Hex Flange, 5/16-18	4
3	01000937	Spacer, 0.345 ID x 1.50 OD x .41	2
4	01000960	Washer, .325 ID x .930 OD x .045	2
5	01001630	Mounting Bracket, Seat	2
6	01002634	Shoulder Screw, .50x2.345, 3/8-16	2
7	01002753	Grommet, 2.5 OD x 1.0 Long	2
8	01006764	Adjustable Seat, Black embossed, Includes Seat Switch	1
9	01009432	Rops Assembly	1

27HP Kohler Engine Assembly - Figure 19

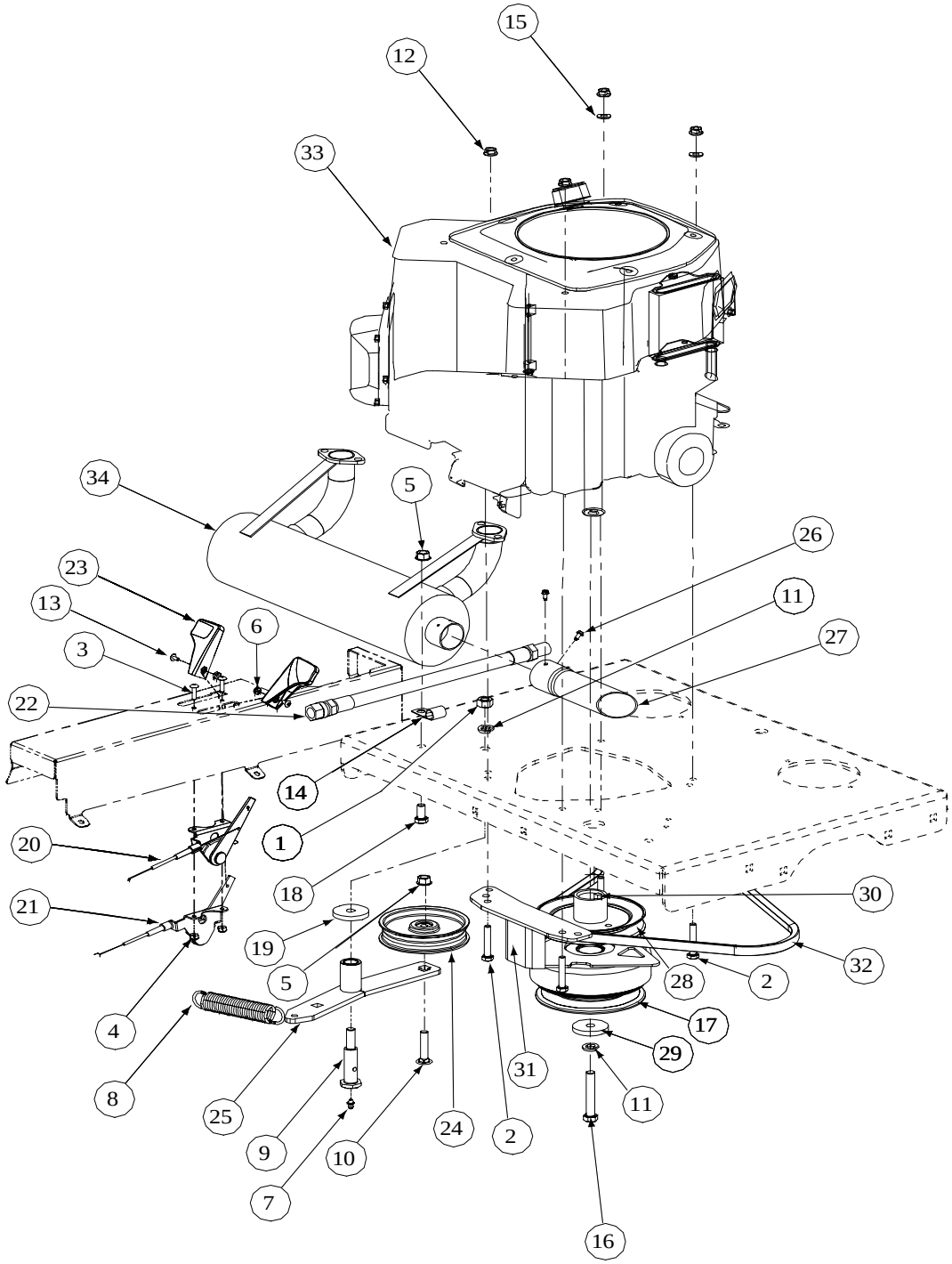

Description	Part Number
Air Filter (Primary)	KH-25-083-01-S
Air Filter (Safety)	KH-25-083-04-S
Fuel Filter	KH-25-050-08-S
Oil Filter	KH-12-050-08
Spark Plug	759-3336

GD: 01008286-P01

27HP Kohler Engine Assembly - Parts List for Figure 19

Ref No	Part No.	Description	Qty.
1	00005763	Hex Nut, 7/16-14	1
2	00006129	HHCS, 5/16-18, 1-3/4	4
3	00014602	Round Hd. Machine Screw, 10-32 x 3/4	2
4	00014608	Lock Nut, Nylon Insert, 10-32	2
5	00022560	Flange Lock, Hex Nut, 3/8-16	2
6	00060056	Nut Washer, W/Star, 8-32	2
7	00060078	Grease Fitting, 1/4-28 x 3/16	1
8	01000199	Extension Spring, 1.0 OD x 5.125	1
9	01000302	Shoulder Screw, 7/16-14	1
10	01000364	Hex Carriage Screw, 3/8-16, 1.75	1
11	01000389	Lock Washer, 7/16	2
12	01000635	Hexflange Lock Nut, 5/16-18	4
13	01000721	Machine Screw, 8-32, .375	2
14	01000728	Clip, Heat Shield Cable	1
15	00012169	Flat Washer, 5/16	2
16	01001395	Capscrew, 7/16-20 x 2.50	1
17	01001979	Clutch Brake, 1.125 ID	1
18	01002601	Hex Cap Screw, 3/8-16, .750	1
19	01003269	Flat Washer, 7/16 ID x 1.75 OD x .25	1
20	01008256	Choke Control Cable	1
21	01003273	Throttle Control Cable	1
22	01003283	Oil Drain Hose	1
23	01004004	Control Throttle Knob	2
24	01004081	Flat Pulley with Flanges	1
25	01009453	Engine Idler Arm Casting	1
26	01000811	Screw, #8-32, 0.375 Hxindwsh	2
27	01008623	Straight Exhaust Pipe, Selxsys	1
28	01005104	Pump Drive Pulley	1
29	01005314	Flat Washer, 7/16 ID x 1.75 OD x .25	1
30	01005856	Key, 1/4 x 1/4 x 3	1
31	01006456	Retainer Clutch Assembly, Ogura	1
32	01007015	Belt, 51.2 Lg	1
33	01007598	Engine, 27HP Kohler	1
34	01006566	Muffler Accessory Kohler	1
Note: Engine Oil 10W40 by the Gallon			

25HP Kawasaki Engine Assembly - Figure 20

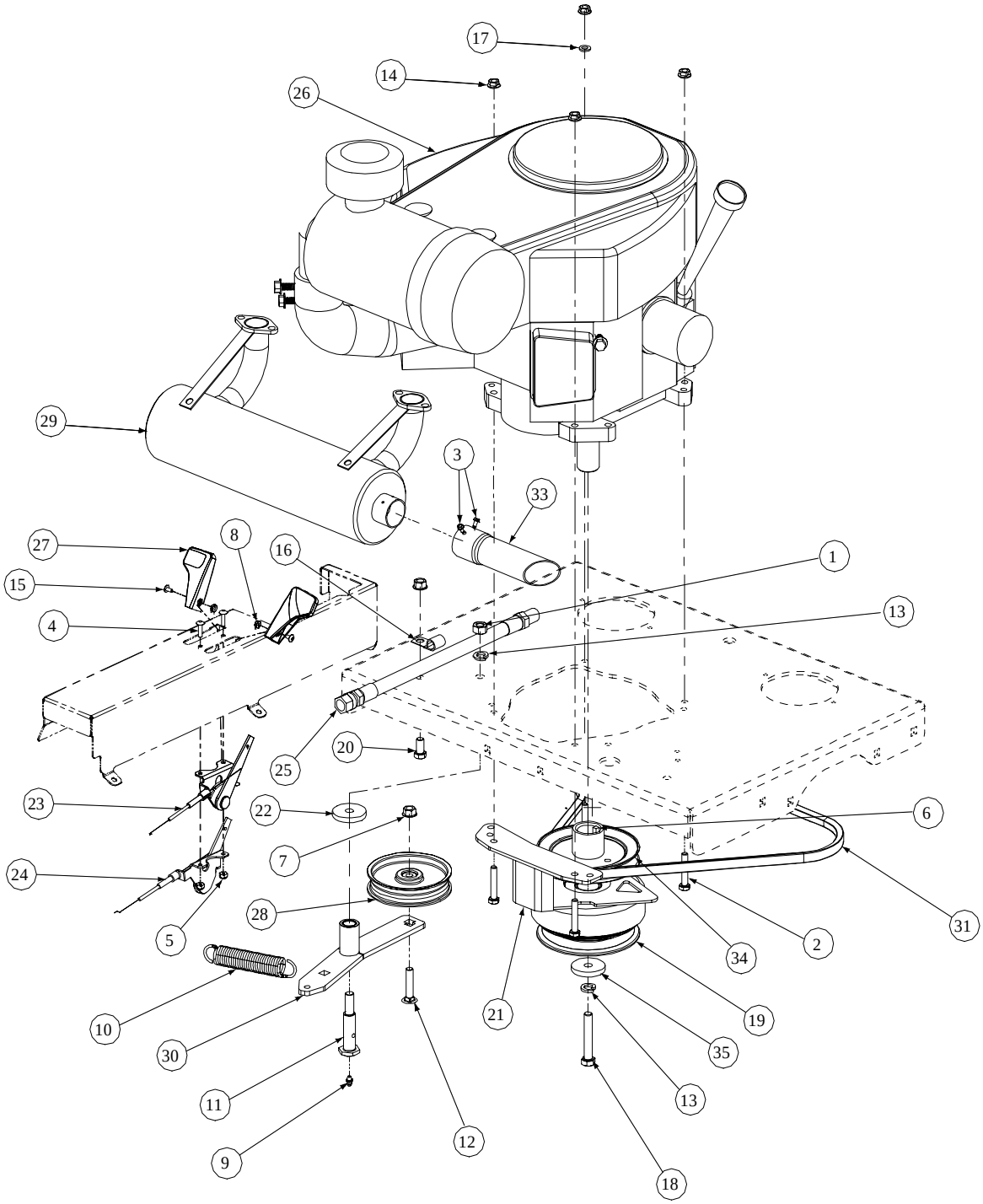

Description	Part Number
Air Filter	KM-11013-7020
Air Filter (Inner)	KM-11013-7019
Fuel Filter	KM-49019-7001
Oil Filter	KM-49065-2078
Spark Plug	KM-BPR4ES

GD: 01007227-P03

25HP Kawasaki Engine Assembly - Parts List for Figure 20

Ref No	Part No.	Description	Qty.
1	00005763	Hex Nut, 7/16-14	1
2	00006129	HHCS, 5/16-18, 1-3/4	4
3	01000811	Screw, #8-32 x 0.375	2
4	00014602	Round Hd. Machine Screw, 10-32 x 3/4	2
5	00014608	Lock Nut, Nylon Insert, 10-32	2
6	01005856	Key, 1/4 x 1/4 x 3	1
7	00022560	Flange Lock, Hex Nut, 3/8-16	2
8	00060056	Nut Washer, W/Star, 8-32	2
9	00060078	Grease Fitting, 1/4-28 x 3/16	1
10	01000199	Extension Spring, 1.0 OD x 5.125	1
11	01000302	Shoulder Screw, 7/16-14	1
12	01000364	Hex Carriage Screw, 3/8-16, 1.75	1
13	01000389	Lock Washer, 7/16	2
14	01000635	Hexflange Lock Nut, 5/16-18	4
15	01000721	Machine Screw, 8-32, .375	2
16	01000728	Clip, Heat Shield Cable	1
17	00012169	Flat Washer, 5/16	1
18	01001395	Capscrew, 7/16-20 x 2.50	1
19	01001979	Clutch Brake, 1.125 ID	1
20	01002601	Hex Cap Screw, 3/8-16, .750	1
21	01006456	Retainer Clutch Assembly, Ogura	1
22	01003269	Flat Washer, 7/16 ID x 1.75 OD x .25	1
23	01003271	Choke, Control Cable, 43.0	1
24	01003272	Throttle, Control Cable, 39.0	1
25	01003283	Oil Drain Hose	1
26	01008525	25HP Twin Engine, Kawasaki	1
27	01004004	Control Throttle Knob	2
28	01004081	Flat Pulley with Flanges	1
29	01009299	Muffler Accessory, Kawasaki	1
30	01009453	Engine Idler Arm Casting	1
31	01007015	V Belt, A Section x .47.3	1
32	--	--	--
33	01008623	Muffler Accessory Exhaust Tube	1
34	01005104	Pump Drive Pulley	1
35	01005314	Flat Washer, 7/16 ID x 1.75 OD x .25	1

Electrical Assembly Kohler - Figure 23

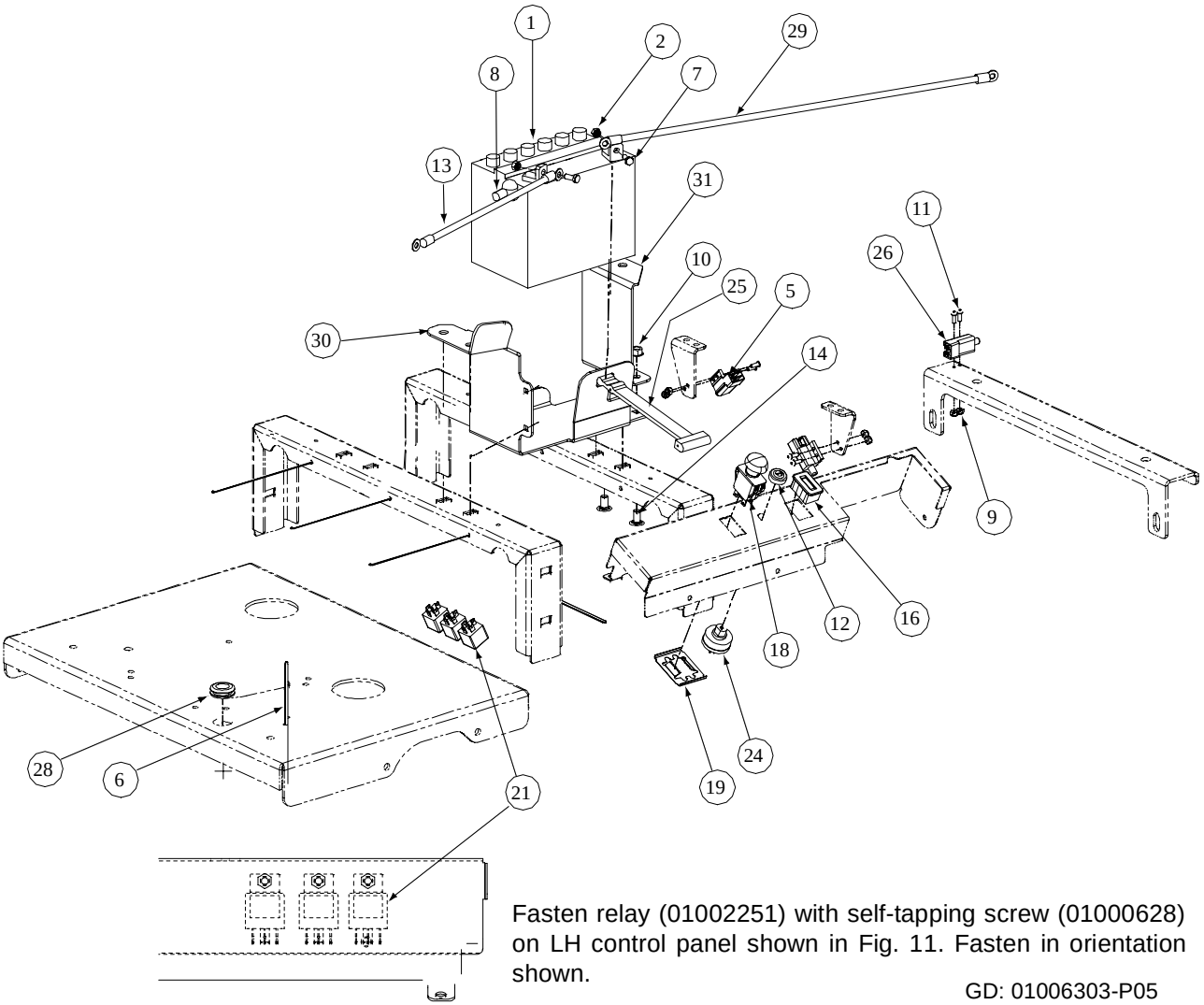

Fasten relay (01002251) with self-tapping screw (01000628) on LH control panel shown in Fig. 11. Fasten in orientation shown.

GD: 01006303-P05

Electrical Assembly Kohler - Parts List for Figure 23

Ref. No.	Part No.	Description	Qty.
1	00012032	Battery, 12V 225CCA 30 Min	1
2	01002766	Lock Nut, 1/4-20	2
3	--	--	--
4	--	--	--
5	00012242	Switch, Safety	2
6	00012470	Tie, Cable, 3/16 x .05 x 7.4"	5
7	00013131	Screw, Hex, Cap, 1/4-20 x .75	2
8	00013258	Boot, 1" OD Rubber Battery-PST, Red	1
9	00014608	Lock Nut, Nylon Insert	6
10	00022560	Nut, Hex, Flange Lock, 3/8-16	2
11	00030906	Screw, Phillips Head, Machine, 10-32 x 5/8	6
12	00032097	Nut, W/Cap, 5/8-32 Ignition	1
13	00012289	Cable, Battery, Red, 36"	1
14	01000372	Carriage Bolt, 3/8-16 x .75 LG.	2
15	--	--	--
16	01005389	Meter, Hour	1
17	01001811	Hourmeter, Harness (not shown)	1
18	01002111	Switch, Electric, PTO	1
19	01002160	Bracket, PTO Switch Retainer	1
20	--	--	--
21	01002251	Relay, 12V 40A	3
22	--	--	--
23	--	--	--
24	01003581	Switch, Ignition, 6 Pin	1
25	01003649	Strap, Battery	1
26	01003712	Switch, Plunger	1
27	01006809	Harness Assembly (not shown)	1
28	01004040	Grommet, .75 ID	1
29	01004078	Cable, Battery Red, 28"	1
30	01004514	Mount Bracket, Battery	1
31	01004559	Mount Bracket, Battery	1

25HP Electrical Assembly Kawasaki - Figure 24

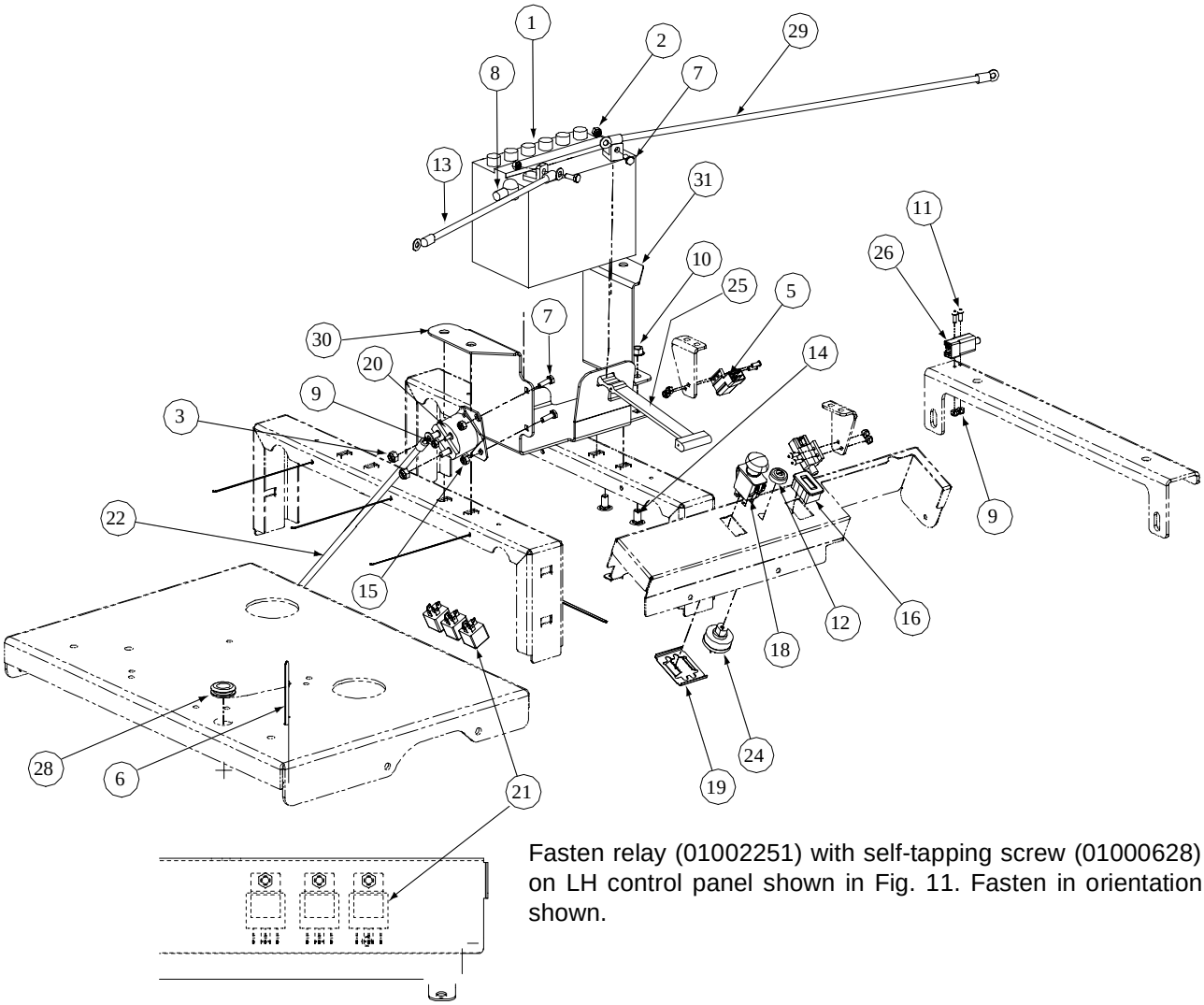

Fasten relay (01002251) with self-tapping screw (01000628) on LH control panel shown in Fig. 11. Fasten in orientation shown.

GD: 01001606-P14

25HP Electrical Assembly Kawasaki - Parts List for Figure 24

Ref. No.	Part No.	Description	Qty.
1	00012032	Battery, 12V 225CCA 30 Min	1
2	01002766	Hex Flange Lock Nut, 1/4-20	3
3	00012165	Nylock Nut, 5/16-18	2
4	--	--	--
5	00012242	Switch, Safety	2
6	00012470	Tie, Cable, 3/16 x .05 x 7.4"	5
7	00013131	Screw, Hex, Cap, 1/4-20 x .75	4
8	00013258	Boot, 1" OD Rubber Battery-PST, Red	1
9	00014608	Nut, Lock, Nylon Insert, #10-32	7
10	00022560	Nut, Hex, Flange Lock, 3/8-16	2
11	00030906	Screw, Phillips Head, Machine, 10-32 x 5/8	6
12	00032097	Nut, W/Cap, 5/8-32 Ignition	1
13	00095773	Cable, Battery, Red, 15"	1
14	01000372	Carriage Bolt, 3/8-16 x .75 LG.	2
15	00012152	Lock Nut w/Nylon Insert	2
16	01005389	Meter, Hour	1
17	01001811	Hourmeter, Harness (not shown)	1
18	01002111	Switch, Electric, PTO	1
19	01002160	Bracket, PTO Switch Retainer	1
20	01002228	Solenoid Magnetic Switch	1
21	01002251	Relay, 12V 40A	3
22	01005406	Cable, Battery Red, 32"	1
23	--	--	--
24	01003581	Switch, Ignition, 6 Pin	1
25	01003649	Strap, Battery	1
26	01003712	Switch, Plunger	1
27	01006804	Harness Assembly (not shown)	1
28	01004040	Grommet, .75 ID	1
29	01004078	Cable, Battery Black, 28"	1
30	01004514	Mount Bracket, Battery	1
31	01004559	Mount Bracket, Battery	1

Lift Assembly - Figure 25

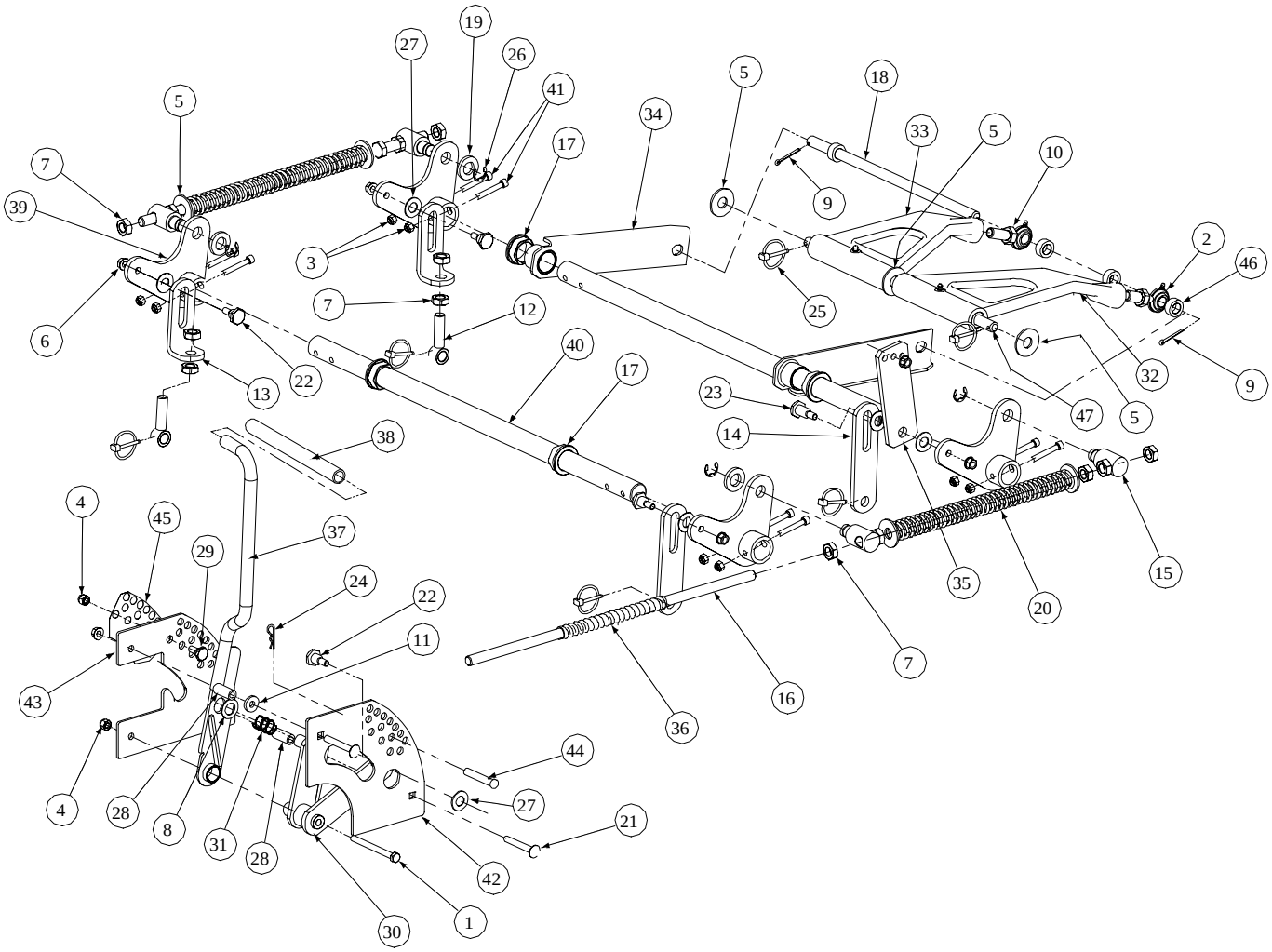

GD: 01008452-P02

Lift Assembly - Parts List for Figure 25

Ref. No.	Part No.	Description	Qty.
1	00011925	Hex Cap Screw, 3/8-16, 3.75	1
2	01007487	Rod End, Male	2
3	00012165	Nut, 5/16-18, Nylock	8
4	00012173	Nylock Insert Lock Nut, 3/8-16	2
5	00013432	Flat Washer, 5/8	7
6	00022560	Hex Nut, Flange Lock, 3/8-16	7
7	00035632	Jam Nut, 5/8-11	14
8	00060017	Flat Washer, .06, .776, 1.25	1
9	00060018	Cotter Pin, 3/16 x 1-1	2
10	01007526	Jam Nut, 5/8-18	2
11	00083192	Idler Washer	1
12	01001744	Eye Bolt, 5/8ID	2
13	01004917	Eye Bolt Mount Link, 5/8 ID	2
14	01004918	Deck Link	2
15	01001855	Ferule Lift	4
16	01001857	Lift Connector Rod	2
17	01001930	Hex Flange Bearing, 1.25 ID	4
18	01002586	Front Lift Link, Rod Mount	1
19	01003123	Spacer, .812 ID x .268 Lg.	3
20	01003318	Lift Compression Spring	2
21	01003534	Carriage Bolt, 3/8-16, 2.75	2
22	01003535	Shoulder Screw, 0.625 OD x .437 Lg.	4
23	01003536	Shoulder Screw, 0.625 OD x .830 Lg.	1
24	01003537	Cotter Pin, .148 x 3.00	1
25	01003993	Linch Pin, 3/16 Dia.	6
26	01003994	E Clip, 3/4 Dia.	4
27	01004003	Nylon Flat Washer, 5/8	6
28	01004080	Spacer, .39 ID x .63 OD x 1.442	2
29	01004118	Shoulder Screw, .50 OD x 0.27	1
30	01004968	Lift Pivot Assembly	1
31	01004971	Lift Handle Spring	1
32	01007804	Bearing Lift Brace Assembly, Right Hand	1
33	01007802	Bearing Lift Brace Assembly, Left Hand	1
34	01005569	Front Frame Strut Assembly	2
35	01006365	Lift Link Adjustment	1
36	01006823	Hose, 5/8 ID 13/16 OD, 8" LG	2
37	01007469	Lift Handle Assembly	1
38	01007561	Lift Handle Grip	1
39	01008207	Bellecrank Weldment Assembly	4
40	01007681	Deck Lift Shaft	2
41	01007962	Socket Head CapScrew, 5/16-18 x 2	8
42	01008627	Outer Lift Index Plate	1
43	01008628	Inner Lift Index Plate	1
44	01008652	Clevis Pin, .438 Dia. x 2.625 Lg.	1
45	01008671	Decal Height Indicator	1
46	01007527	Spacer, .630 ID x 1.06 OD x .440	4
47	01008453	Lift Link Rod	1

Foot Pedal Deck Lift Assembly - Figure 26 and Part List

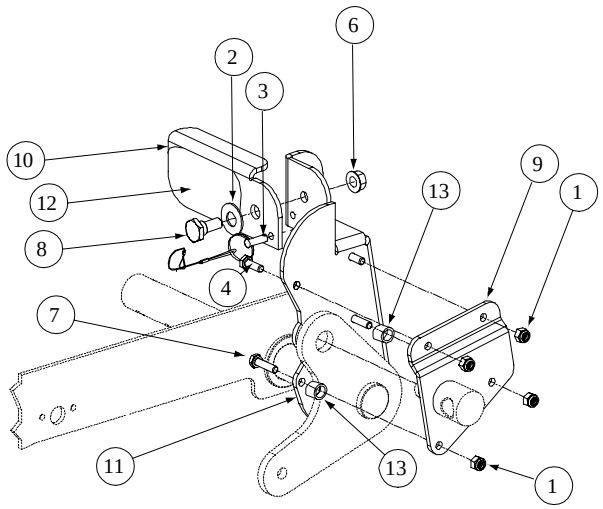

GD: 01008360-P01

Ref. No.	Part No.	Description	Qty.
1	00012152	Lock Nut, Nylon Insert, 1/4-20	4
2	00012577	Washer, 1/2 x 1 Shim	1
3	01006786	Detent Pin w/12" Lanyard	1
4	00013131	Hex Cap Screw, 1/4-20, .75	2
5	--	--	--
6	00022560	Hex Nut, Flange Lock 3/8-16	1
7	01000944	Hex Cap Screw, 1/4-20, 1.00	2
8	01004118	Shoulder Screw, .50 x .27 Lg., 3/8-16	1
9	01006409	Foot Lift Backup Pedal	1
10	01006352	Deck Foot Pedal Lift	1
11	01008359	Deck Foot Pedal Lift	1
12	01006418	Deck Foot Lift Pad	1
13	00062715	Turnbuckle Sleeve	2

Floor Panel Assembly- Figure 27 and Parts List

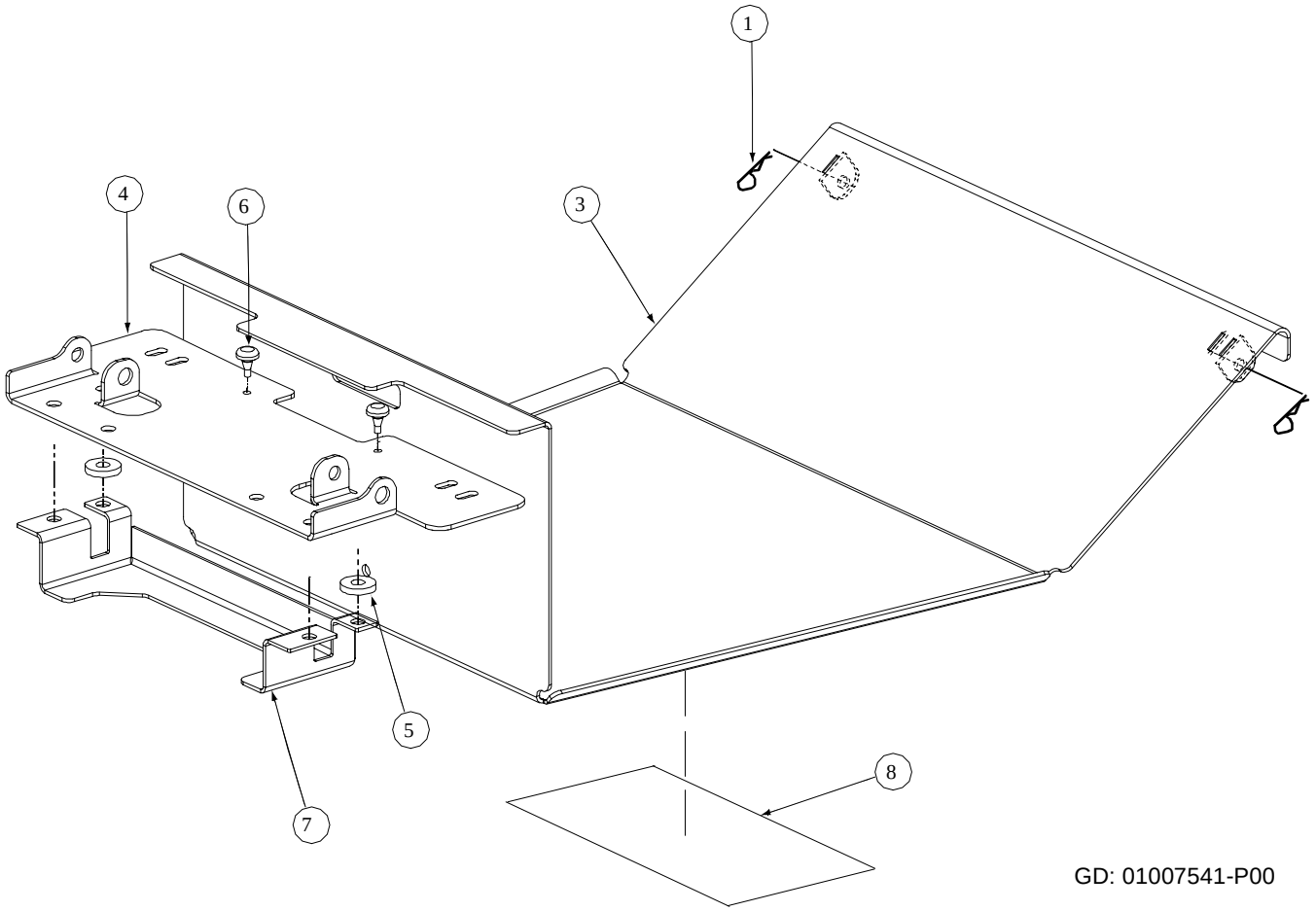

GD: 01007541-P00

Ref. No.	Part No.	Description	Qty.
1	00021956	Hair Pin, 3/8-1/2	2
2	--	--	--
3	01007560	Floor Panel Assembly	1
4	01001638	Panel Seat	1
5	00083192	Washer	2
6	01001170	Rubber Bumper, .62 OD x .22 Thick	2
7	01004726	Support, Seat Bracket	1
8	01004992	Label, Belt Routing and Lubrication	1



Cub Cadet Commercial
P.O. Box 368023
Cleveland, OH 44136

Form No. 01009784 Rev. 03-0 01/16/2004